UNCLASSIFIED

CENTRAL RESEARCH LIBRARY
DOCUMENT COLLECTION

MARTIN MARIETTA ENERGY SYSTEMS LIBRARIES
3 4456 0360711 2

ORNL-1742
Chemistry Cy. 4

RADIO-FREQUENCY OSCILLATORS FOR DETERMINATION OF ALKALI

R. W. Stelzner
M. T. Kelley

CENTRAL RESEARCH LIBRARY
DOCUMENT COLLECTION
LIBRARY LOAN COPY
DO NOT TRANSFER TO ANOTHER PERSON
If you wish someone else to see this document, send in name with document and the library will arrange a loan.

OAK RIDGE NATIONAL LABORATORY
OPERATED BY
CARBIDE AND CARBON CHEMICALS COMPANY
A DIVISION OF UNION CARBIDE AND CARBON CORPORATION
UCC
POST OFFICE BOX P
OAK RIDGE, TENNESSEE

UNCLASSIFIED

ORNL-1742

Copy No 4

Contract No W-7405-eng-26

ANALYTICAL CHEMISTRY DIVISION

M T Kelley, Director
C D Susano, Associate Director

RADIO-FREQUENCY OSCILLATORS FOR DETERMINATION OF ALKALI

R W Stelzner
M T Kelley

Edited by

H P Raaen

Date Issued

JUN 9 1955

OAK RIDGE NATIONAL LABORATORY
operated by
CARBIDE AND CARBON CHEMICALS COMPANY
A Division of Union Carbide and Carbon Chemicals Company
Post Office Box P
Oak Ridge, Tennessee

3 4456 0360711 2

INTERNAL DISTRIBUTION

1 C E Center
2 Biology Library
3 Health Physics Library
4-5 Central Research Library
6 Reactor Experimental Engineering Library
7-11 Laboratory Records Department
12 Laboratory Records, ORNL R C
13 C E Larson
14 L B Emlet (K-25)
15 J P Murray (Y-12)
16 A M Weinberg
17 E H Taylor
18 E D Shipley
19 F C VonderLage
20 M T Kelley
21 C P Keim
22 J H Frye, Jr
23 W H Jordan
24 J A Swartout
25 F L Culler
26 S C Lind
27 A H Snell
28 A Hollaender
29 G H Clewett
30 K Z Morgan
31 T A Lincoln
32 A S Householder
33 R S Livingston
34 D S Billington
35 C E Winters
36 D W Cardwell
37 E M King
38 D D Cowen
39 J A Lane
40 M J Skinner
41 G E Boyd
42 H T Kite(Y-12)
43 A Krieg (Y-12)
44 D J Fisher
45 H P Raaen
46 R W Dodson (consultant)
47 H Eyring (consultant)
48 J W Kennedy (consultant)
49 G T Seaborg (consultant)
50 R H Muller (consultant)
51 N H Furman (consultant)
52 ORNL Document Reference Library, Y-12 Branch

EXTERNAL DISTRIBUTION

53 R F Bacher, California Institute of Technology
54 Division of Research and Medicine, AEC, ORO
55-349 Given distribution as shown in TID-4500 under Chemistry category

DISTRIBUTION PAGE TO BE REMOVED IF REPORT IS GIVEN PUBLIC DISTRIBUTION

TABLE OF CONTENTS

		Page
0 0	Abstract	1
1 0	Introduction	2
2 0	Summary	3
3 0	Principle of Operation	4
4 0	Description of Instruments	7
4 1	Parallel Transmission-line Oscillator (PTIO)	7
4 1 1	Oscillator	7
4 1 2	Zero-set Circuit	9
4 1 3	Brown Recorder	10
4 1 4	Power Supply	10
4 1 5	Cell	10
4 1 6	Housing	11
4 2	Constant-current Parallel Transmission-line Oscillator (CCPTLO)	11
4 2 1	Oscillator	11
4 2 2	Zero-set Circuit	11
4 2 3	Brown Recorder	11
4 2 4	Power Supply	13
4 2 5	Constant-current Control of the Oscillator Plate Current	13
4 2 6	Housing	15
4 2 7	Cell	15
4 3	Dual Parallel Transmission-line Oscillator System	15
5 0	Discussion	21
5 1	Experimental Testing	27
5 1 1	Sensitivity	27
5 1 2	Stability	28
6 0	Conclusions	35
7 0	References	40

LIST OF FIGURES

Number	Title	Page
1	Block Diagram of the Parallel Transmission-line Oscillator	8
2	Circuit Diagram of the Parallel Transmission-line Oscillator	8
3	Block Diagram of the Constant-current Parallel Transmission-line Oscillator	12
4	Circuit Diagram of the Constant-current Parallel Transmission-line Oscillator	12
5	Photograph of Oscillator Section of the Parallel Transmission-line Oscillator (Front View)	16
6	Photograph of Oscillator Section of the Parallel Transmission-line Oscillator (Side View)	17
7	Circuit Diagram of the Dual Oscillator System	18
8	Stability Characteristics of the Dual Parallel Transmission-line Oscillator System	19
9	Circuit Diagram of the Type 6J6 Oscillator	22
10	Typical Calibration Curve for the Type 6J6 Oscillator	24
11	Oscillator Response versus Specific Conductance of Aqueous Solutions of Potassium Hydroxide	26
12	Initial Stability Characteristics of the Constant-current Type 955 Oscillator	29
13	Typical Calibration Curve for the 235-Megacycle Oscillator for Potassium Hydroxide (Constant-current Instrument)	30
14	Typical Calibration Curve for the 235-Megacycle Oscillator for Potassium Hydroxide (Constant-current Instrument)	31
15	Stability Characteristics of the Type 955 Constant-current Parallel Transmission-line Oscillator	33
16	Stability Characteristics of the Type 955 Constant-current Parallel Transmission-line Oscillator	34
17	Calibration Curve of the Type 955 Parallel Transmission-line Oscillator for Sulfuric Acid	39

LIST OF TABLES

Number	Title	Page
1	Comparison of Constant-current Operation with Conventional Operation of a Self-excited Oscillator	14
2	Stability Data of Parallel Transmission-line Oscillators	32

0 0 Abstract

The development and evaluation of an instrument for the determination of high concentrations (greater than 0 1 M) of alkali in aqueous solution is described The design of the instrument is based upon the loading of a radio-frequency oscillator This instrument is useful in the range of 0 to 3 0 M potassium hydroxide solution

1 0 Introduction

The adaptation of radio-frequency oscillators to the analysis of chemical systems has previously been largely in the electrolyte concentration range well below 0 1 M Harley and Wiberly, in a recent book[2], state, "Considerable work needs to be done to extend high-frequency methods to concentrated (over 0 1 N) aqueous solutions " It was predicted at this laboratory that the higher Q represented in a resonant transmission-line circuit would permit greater sensitivity to concentration changes than would the Q of the conventional coil-capacitor tank circuit The instrument described in this report was developed to take advantage of this consideration in extending the applicability of high-frequency methods to the analysis of aqueous systems of electrolyte concentration greater than 0 1 M

2 0 Summary

A radio-frequency oscillator for the determination of high concentrations (greater than 0 1 M) of alkali in aqueous solution was developed and evaluated Of the circuits considered, the most successful is a parallel transmission-line oscillator of triode type When the cell, mounted permanently between the transmission lines, is filled with a solution of alkali, an addition is made to the power loss of the dielectric medium that surrounds the transmission lines This increase in the power loss is reflected in terms of oscillator response by a decrease in the grid current of the oscillator A calibration curve that relates grid current (or grid voltage) of the oscillator to concentration is used for the determination of the concentration of alkaline solutions

The maximum drift exhibited by the parallel transmission-line oscillator is less than 0 3 mv over long periods of time when the oscillator is operated at a sensitivity of a full-scale span on a 0- to 10-mv Brown recorder, the full-scale span is equal to a 0 1 M change in the alkali concentration This sensitivity applies to the region from 0 to about 1 0 M The sensitivity curve for the instrument indicates that the instrument operates most favorably in this lower region of concentration It is possible to operate the instrument at concentrations above 2 5 M KOH with frequent standardization of the instrument response by means of titrations

3 0 Principle of Operation

A radio-frequency oscillator is a device for obtaining a periodically varying current from a steady direct-current source The operation of the oscillator is dependent upon the ability of the vacuum tube to amplify a signal that is placed upon its control grid If a portion of the output voltage of an initially zero-biased amplifier is fed back into the input with a phase shift of approximately 180°, the amplifier stage can be sent into oscillation by the application of plate voltage The bias of the oscillator tube is shifted rapidly from zero to a high negative value, corresponding to Class C operation of the tube, through the action of the grid-leak resistor and capacitor At the same time, the mutual transconductance of the tube is reduced, this results in a decrease in the gain of the amplifier An equilibrium is reached at which the circuit losses in the system are just overcome by the amplified signal The frequency of these oscillations is determined by L, C, and R parameters of the circuit, either in the form of lumped or distributed constants

Energy at the frequency of oscillation may be taken from the tank circuit of the oscillator by a suitable coupling scheme Whenever radio-frequency (rf) energy is removed from the circuit, the plate current of the oscillator tube increases, and the grid current decreases The plate current increases because the increased loss of energy from the system must be at the expense of the direct-current source The grid current decreases because the voltage that is fed back to the control grid is decreased by the lowering of the Q of the tank circuit Either of the two variables, plate current or grid current, may be observed as a measure of the energy losses of the oscillator system

If a solution of an electrolyte is placed in the immediate vicinity of the tank circuit of a radio-frequency oscillator so that rf energy is absorbed from the oscillator by the solution, changes in the plate and grid currents of the oscillator will occur These energy losses, as reflected in the changes of plate and grid currents, can be related to the concentration of the electrolyte by an empirical calibration curve in which concentration is plotted against either of the tube currents

The parallel transmission-line oscillator differs from the conventional coil-capacitor form in that the frequency-determining parameters are distributed constants rather than lumped constants The distributed constants of the transmission line permit a higher Q and a higher impedance than is permitted for the lumped constants of the coil-capacitor form of tank circuit, at the same frequency

The Q of parallel transmission lines can be calculated from the equation given by Terman,[4] that is,

$$Q = 0\ 0887 (f)\ (b)\ (J)$$

where

f = frequency, cycles per second,

b = spacing between the centers of the two lines, cm,

J = a factor based upon the b/a ratio of the transmission lines,

a = the radius of the lines.

For the transmission lines described in this report,

f = 235 Mc per second
b = 2 22 cm, and
J = 0 6,

therefore $Q = 0\ 0887\ (235 \times 10^6)\ (2\ 22)\ (0\ 6)$
$Q = 1800$ (approximately)

The value of Q calculated from this equation depends upon negligible radiation losses and upon an air dielectric between the transmission lines The Q of the parallel transmission-line oscillator will be somewhat less than this maximum figure of 1800

4 0 Description of Instruments

Five different designs of radio-frequency oscillators were considered for the measurement of the concentration of alkali in aqueous solution Of these designs, the most successful was a parallel transmission-line oscillator circuit that used a type 955 acorn triode A modification of the basic circuit to include constant-current control of the oscillator plate current permitted the extension of the upper concentration limit for alkali Both forms of the instrument are described in this section A dual parallel transmission-line oscillator system that used the type 955 oscillator sections is also described

4 1 Parallel Transmission-Line Oscillator (PTLO)

Block and circuit diagrams of the parallel transmission-line oscillator (PTLO) are shown in Figs 1 and 2

4 1 1 Oscillator

A type 955 acorn triode vacuum tube, operated at about 235 Mc, is employed in a parallel transmission-line oscillator circuit The transmission lines, 8-in lengths of 1/8-in copper tubing spaced 3/4 in apart, are soldered to the plate and to the grid pins of the tube socket A shorting capacitor of 800 μμf (zero temperature coefficient) is moved along the parallel lines to alter the frequency This capacitor is soldered in place when a frequency of 235 Mc is established The adjustment of frequency permits the comparison of different oscillator sections for reproducibility of the instrumentation An rf filter, consisting of RFC-3 (140 μh) and its associated 0 005-μf disk capacitors, keeps stray rf voltages from the power supply

UNCLASSIFIED
ORNL LR DWG 5467

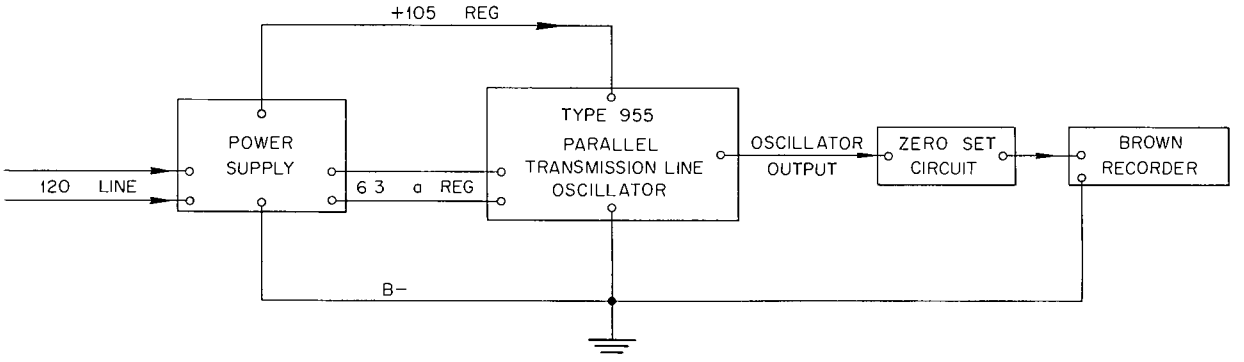

Fig 1 Block Diagram of the Parallel Transmission-Line Oscillator

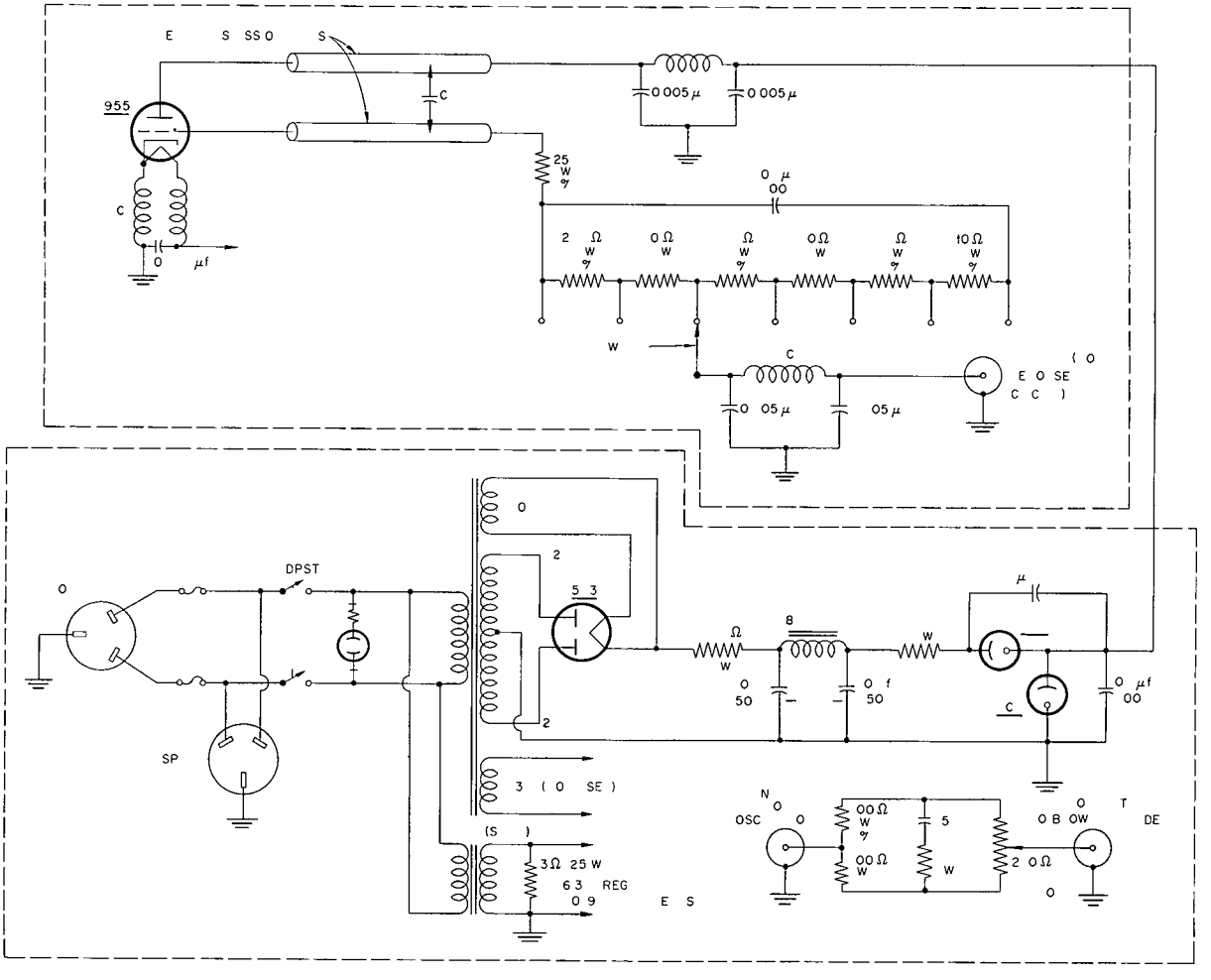

Fig 2 Circuit Diagram of the Parallel Transmission-Line Oscillator

The grid-leak resistor, comprised of the 25K resistor in series with a group of measuring resistors, develops 15 to 20 volts of negative bias when the oscillator is not loaded and when the plate voltage is +105 volts The bias decreases to about -1 volt when the oscillator is heavily loaded The measuring resistors, bypassed for rf by the 0 1-μf capacitor, are connected to taps on a multicontact Sensitivity Switch The oscillator output is obtained from these measuring resistors The switch allows control over the oscillator output voltage that is fed into the Brown recorder via the Zero-set Circuit

The cathode and filaments of the 955 tube are isolated from rf ground by the two 5/16-in diameter rf chokes, RFC-1 and RFC-2, each 13 turns of No 14 enameled wire These chokes are essential to the operation of the oscillator at this frequency because they ensure that the inter-electrode capacitances of the tube shall be part of the tank circuit

4 1 2 Zero-set Circuit

A bridge type of zero-set circuit that employs a 1 5-volt telephone battery loaded by 1 4 ma is used to shift the zero-point of the oscillator output voltage by ± 70 mv This span in zero-shift can be varied by altering the value of the 1K resistor that is in series with the battery This type of zero-set circuit allows a selected portion of the concentration range to be represented by the full scale of the Brown recorder

4 1 3 Brown Recorder

A 0- to 10-mv Brown recorder is connected to the output of the zero-set circuit by means of a length of shielded cable The 10-turn Helipot zero-set allows the pen of the recorder to be placed on the chart scale at any desired point The measurement of the oscillator output voltage can also be determined manually by the use of a conventional potentiometer

4 1 4 Power Supply

A conventional full-wave rectification power supply that has capacitor input filtering is employed to furnish the power for a voltage-regulated power source The use of VR-tubes to furnish the d-c power for the oscillator increases the stability of the oscillator grid current

The filaments of the type-955 oscillator are connected to the 6 3-volt winding of a Sola constant-voltage transformer instead of to the 6 3-volt winding on the power transformer This feature increases the short-term grid-current stability by a factor of two

4 1 5 Cell

The cell is a 3/4-in diameter glass or plastic tube that is fixed permanently between the parallel transmission lines of the oscillator A cylinder of liquid is thus placed in the electric field between the two lines The liquid couples energy from the field, changing the plate and grid currents of the oscillator tube This arrangement readily permits the

filling and emptying of the cell, the arrangement is to be preferred to the use of sealed-in-glass standards because of the greater reproducibility in the oscillator response for a given concentration

4 1 6 Housing

The oscillator and its cell are mounted in an 18-in x 6-in x 4-in aluminum box The power supply and the zero-set Circuit are mounted within a 14-in x 8-in x 7-in cabinet

4 2 Constant-current Parallel Transmission-line Oscillator (CCPTLO)

It was discovered that the sensitivity and grid-current stability of the oscillator could be improved if the plate current of the oscillator were held constant The instrument described above was modified in order to achieve constant-current control of the oscillator plate current, thus leaving the grid current to vary as a function of the loading Block and circuit diagrams of this oscillator are shown in Figs 3 and 4

4 2 1 Oscillator

The only change made in the oscillator circuit was to increase from +105 to +255 volts the plate voltage that is supplied to the unit

4 2 2 Zero-set Circuit

No change

4 2 3 Brown Recorder

No change

UNCLASSIFIED
ORNL LR DWG 5469

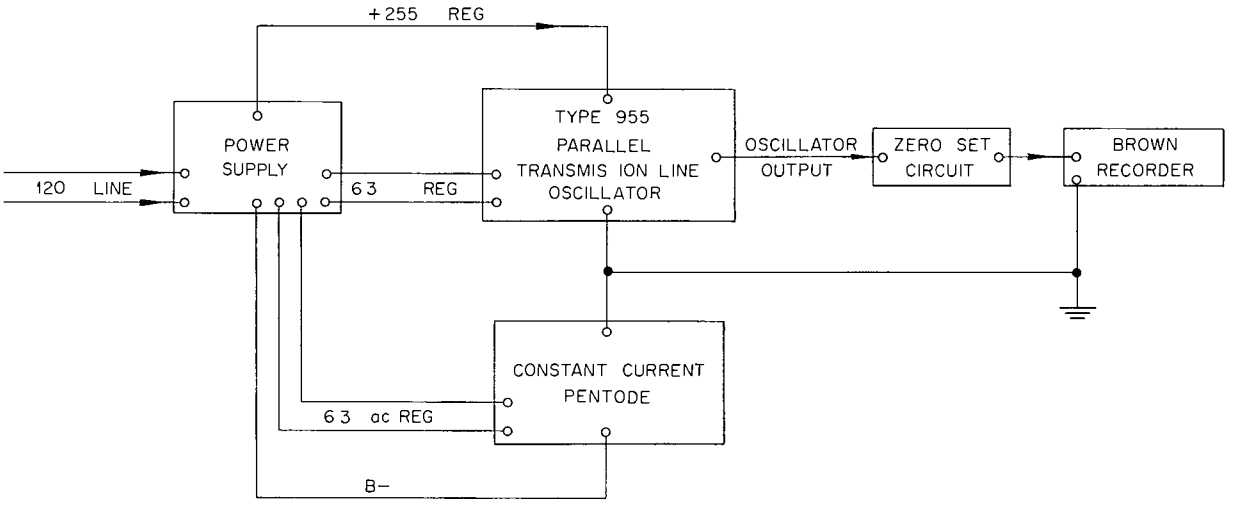

Fig 3 Block Diagram of the Constant-Current Parallel Transmission-Line Oscillator

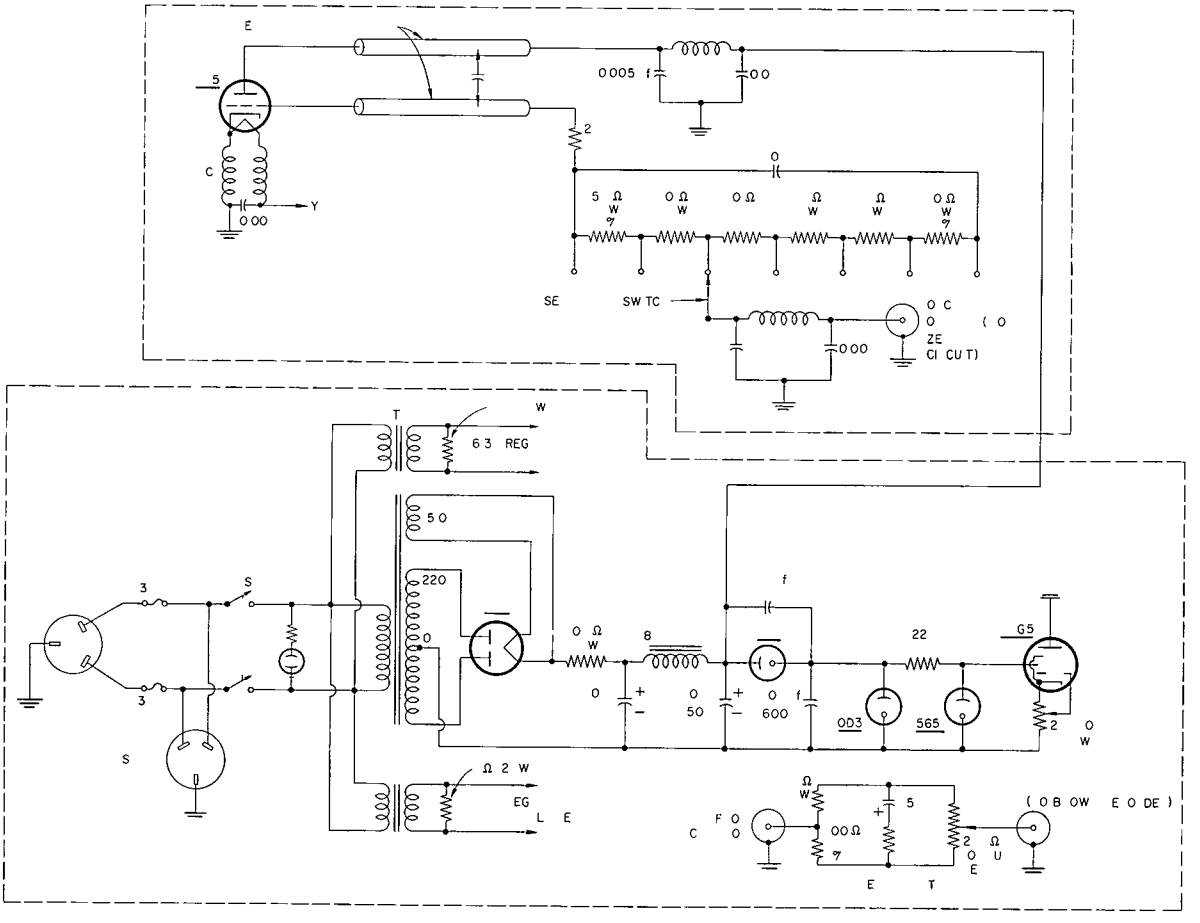

Fig 4 Circuit Diagram of the Constant-Current Parallel Transmission-Line Oscillator

4 2 4 Power Supply

The power supply was modified to produce the +255 volts needed Types OC3 and OD3 VR-tubes were used in series to give this voltage A 5651 VR-tube and a 22K resistor were connected across the OD3 VR-tube to furnish +88 volts to the screen grid of the pentode The B- lead that was previously grounded in the unmodified power supply is insulated from the chassis A 6 3-volt Sola constant-voltage transformer was added to furnish filament power for the constant-current pentode The cathode of the pentode is connected to this winding to avoid exceeding the cathode-filament maximum voltage rating of the tube

4 2 5 Constant-current Control of Oscillator Plate Current

A miniature pentode, a type 6AG5, is connected in series with the type 955 oscillator tube, so that the d-c current of the oscillator must pass through the pentode The pentode has a dynamic characteristic curve that is essentially flat above the "knee", and its plate current will remain relatively constant for large changes in the plate voltage The series combination of a triode oscillator and a pentode ensures that a constant current will pass through the oscillator regardless of what loading is placed upon the oscillator In Table 1, data for this type of operation is compared with that for conventional operation of the PTLO

Table 1

Comparison of Constant-current Operation with Conventional Operation of a Self-excited Oscillator

Concentration of KOH, M	Without Constant-current Pentode				With Constant-current Pentode			
	E_p (955), v	I_p(955), ma	I_g(955), ma	ΔI_g, ma	E_p(955), v	I_p(955), ma	I_g(955), ma	ΔI_g, ma
0	158	2 4	1 03		158	2 4	1 04	
3 2	158	2 9	0 54		127	2 4	0 42	
				0 49				0 62

The table shows that the grid-current span of the oscillator for a 3 2-M change in KOH concentration has been increased by a factor of about 25 % In addition, the grid-current stability of the oscillator is improved on long-term operation The 6 3-volt Sola constant-voltage transformer is added to furnish filament power for the pentode so that the freedom from short-term fluctuations that arise from surges in the line voltage is increased

It is not necessary to be restricted to a type 6AG5 pentode for this application Almost any pentode with a flat characteristic curve can be used It is essential that the pentode be placed in the cathode circuit of the oscillator, because then the bias and the screen voltage of the pentode are both referred to a constant potential, that of the B⁻ line A pentode was placed in the plate circuit of the oscillator to determine experimentally the feasibility of the circuit The attempt was unsuccessful because of the variable reference potential for the pentode voltages The 5651 VR-tube is placed in this circuit to ensure a constant screen voltage for the pentode

4 2 6 Housing

The housing of the unit was not affected by the change to constant-current operation of the oscillator

4 2 7 Cell

The same cell that was used in the unmodified instrument was used in the constant-current instrument Details of the cell construction are illustrated in Figs 5 and 6

4 3 Dual Parallel Transmission-line Oscillator System

A design that used two of the parallel-line oscillators, each operated at 235 Mc and in an arrangement where one served as a "standard" and the other as an "unknown", was demonstrated to be feasible The essentials of this dual-oscillator system are shown in Fig 7 In this arrangement, the difference in oscillator responses (as represented by partial grid voltages) is recorded as a function of concentration The dual-oscillator system possesses the advantage over the single-oscillator system that differences in oscillator response which arise from temperature changes tend to be cancelled The system exhibits excellent sensitivity and stability characteristics, as illustrated in Fig 8

An alternative method of using the dual-oscillator system was also demonstrated to have a possibility for successful operation In this system, the two oscillators were used, one as a "standard" and the other as an "unknown", to produce a beat frequency representing the difference in the frequency of operation of the oscillators The frequency of an

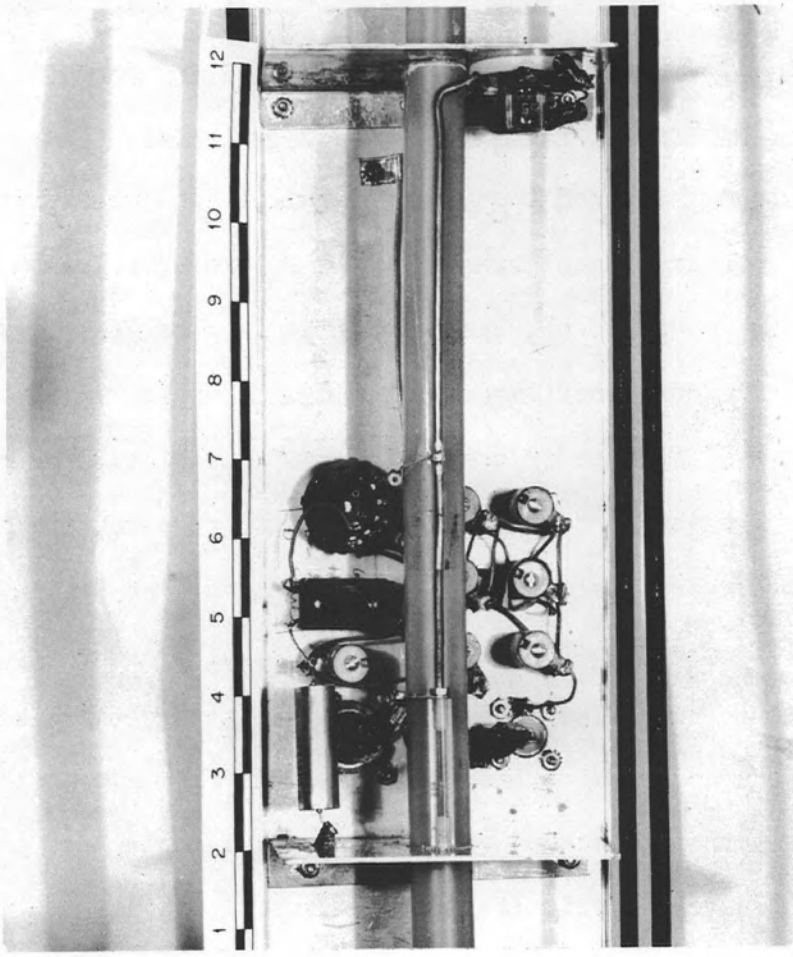

FIG. 5 - PHOTOGRAPH OF OSCILLATOR SECTION OF THE PARALLEL TRANSMISSION-LINE OSCILLATOR (FRONT VIEW)

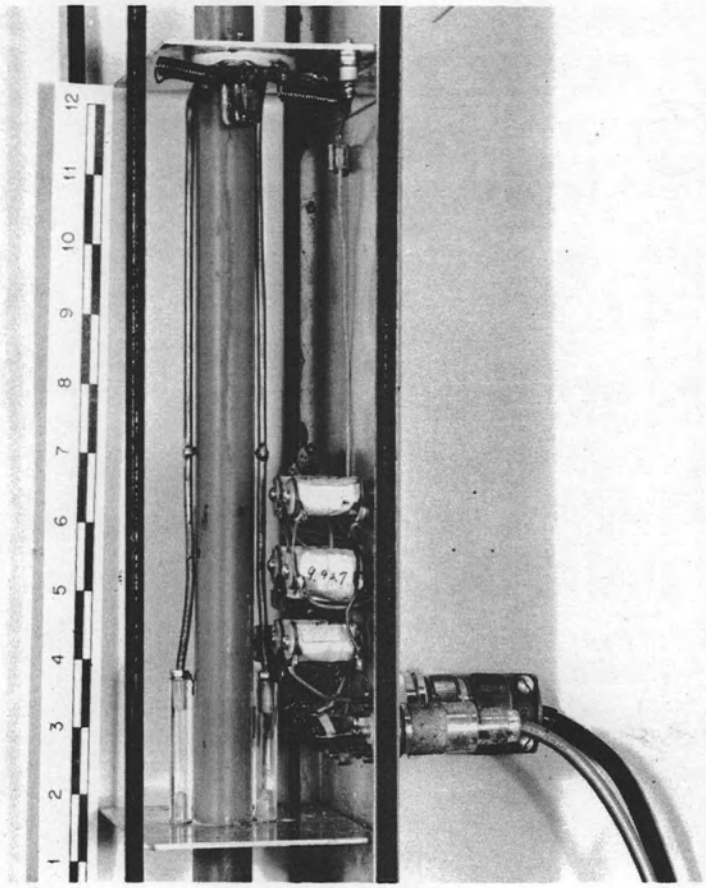

FIG. 6 - PHOTOGRAPH OF OSCILLATOR SECTION OF THE PARALLEL TRANSMISSION-LINE OSCILLATOR (SIDE VIEW)

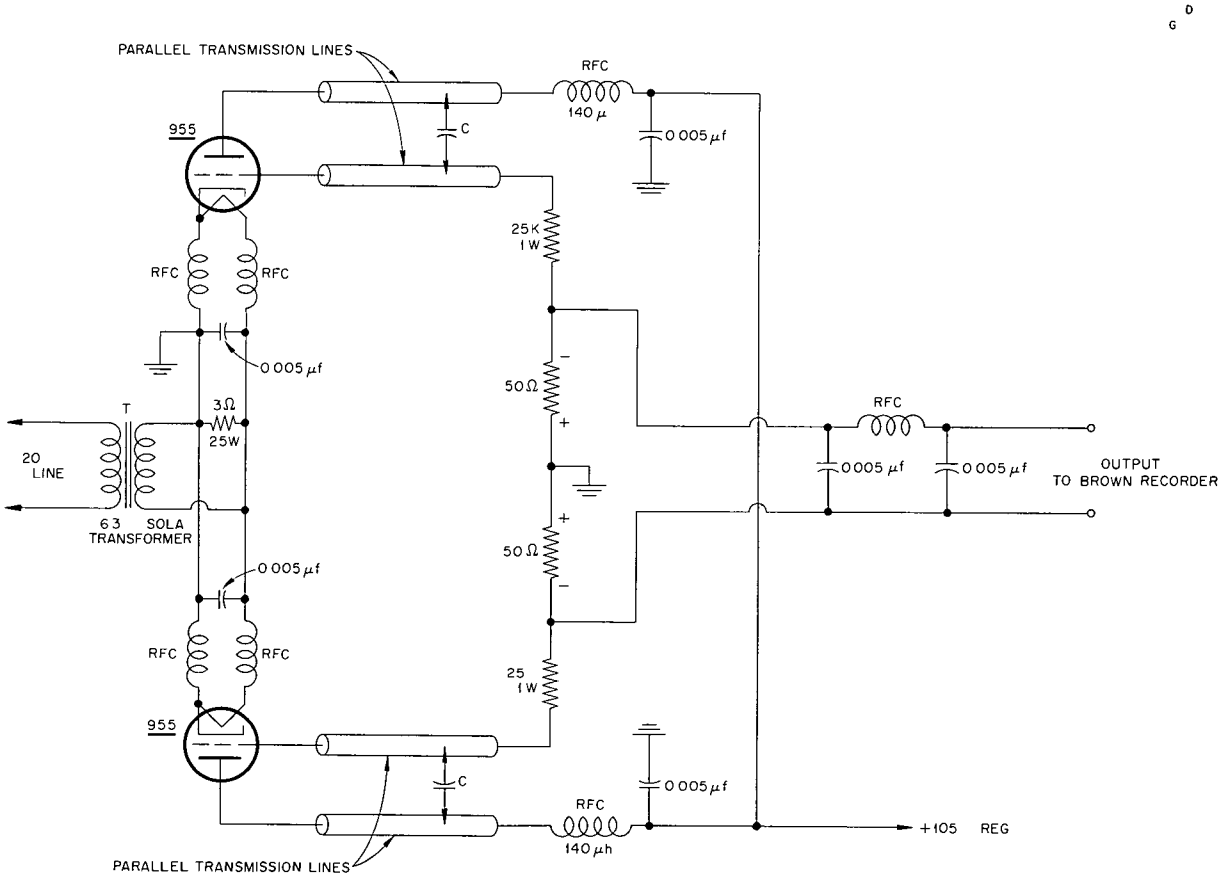

Fig 7 Circuit Diagram of the Dual Oscillator System

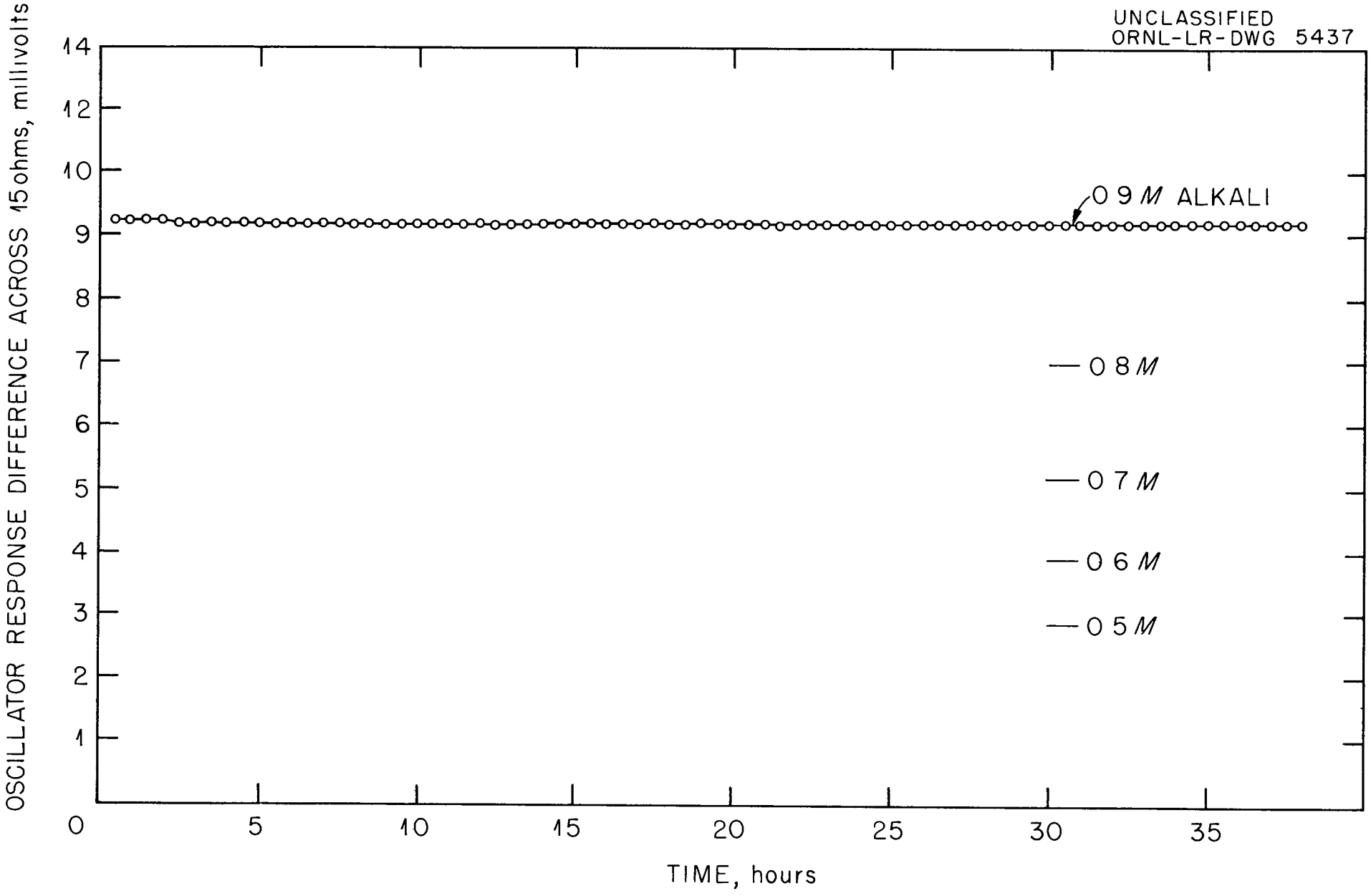

FIG 8 - STABILITY CHARACTERISTICS OF THE DUAL PARALLEL TRANSMISSION-LINE OSCILLATOR SYSTEM

oscillator is shifted slightly on loading, and this shift in frequency can be used to indicate the degree of loading and therefore the concentration of the liquid electrolyte in the cell The cell of one of the oscillators is filled with an alkaline solution, and the frequency produced by this oscillator is used as a standard The cell of the other oscillator is filled with the "unknown" alkaline solution The two frequencies are mixed by a crystal, the output of which is the beat frequency The frequency of this beat note, determined by means of a communications receiver, is plotted against the concentration of the "unknown" alkaline solution This system was used by Blaedel and Malmstradt in their 350-Mc oscillator for titration work (1)

This beat-frequency system of oscillators was given only a preliminary examination If it were to be adopted, it would be advisable to amplify the beat note, pass the amplified signal into a pulse-forming network, and record the number of pulses (and therefore the frequency of the beat note) by means of a suitable electronic counter

This beat-frequency system of using dual oscillators may prove more sensitive than the method of measuring the grid or plate current Terman(3) states that if temperature is held constant, parallel-transmission-line oscillators possess frequency stability that is equal to that of a crystal oscillator

5.0 Discussion

The first oscillator constructed for the determination of high concentrations of alkaline in aqueous solutions was a unity-coupled, twin-triode circuit operated at about 95 Mc Energy from the oscillator was capacitively coupled into the cell by means of plates mounted on the tank circuit The unit was rejected because of insufficient sensitivity to a change in concentration

A radio-frequency oscillator, based upon a type 6J6 vacuum tube operated at about 400 Mc in a push-pull circuit (see Fig 9), was constructed and tested with different concentrations of alkali The tank circuit of this oscillator consisted of a one-turn, 1-in copper strap, about 3 in in length, soldered to the plate pins of the 6J6 socket, plus the interelectrode capacitances of the tube

The cell was fixed permanently inside the tank circuit because of the nonreproducibility in oscillator response associated with sealed-in-glass standards The initial work on the testing of these oscillators was performed with sealed-in-glass standards because of the simplicity of the testing procedure The exact position of the cell affected the oscillator response, even when precision-bore tubing was used in fabricating a cell The succeeding work was therefore carried out with a permanently mounted, rigid cell that could be filled and emptied

UNCLASSIFIED
ORNL-LR DWG 5472

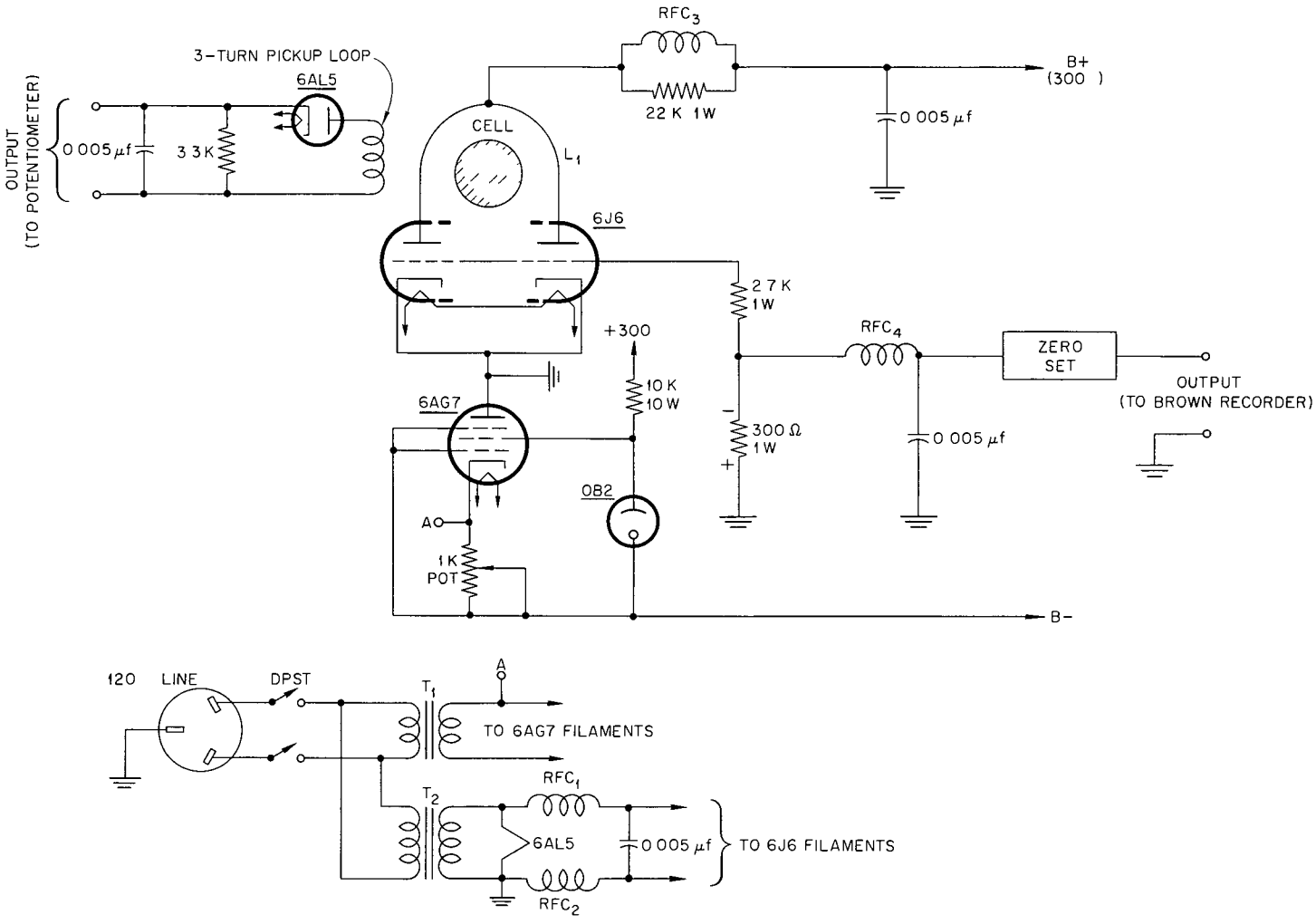

Fig 9 Circuit Diagram of the Type 6J6 Oscillator

Two methods of measurement of the 6J6 oscillator response were employed In the first, grid current of the 6J6 was observed as a function of concentration, in the second, rectified current from a 3-turn pickup loop placed within the tank circuit coil was measured as a function of alkali concentration A type 1N34 germanium diode was first employed for rectification of the pickup current, but this was later changed to a type 6AL5 hard-vacuum diode because of the superior performance of the latter

The stability and the sensitivity of this oscillator were improved considerably by controlling the 6J6 plate current (at 22 ma) through the use of a constant-current pentode in series with the oscillator A type 6AG7 pentode was selected for this application because of its current-handling capacity Although this oscillator appeared promising, work on it was discontinued because a later model oscillator (the parallel transmission-line oscillator) appeared simpler and better in performance A typical calibration curve for the 6J6 oscillator that uses constant-current control of the oscillator plate current is shown in Fig 10

The parallel transmission-line oscillator employs a type 955 acorn triode that is connected to two parallel 8-in lengths of 1/8-in copper tubing, spaced 3/4-in apart, the lines are soldered to the plate and grid pins of the 955 tube socket A 3/4-in plastic (or pyrex) tube is fixed permanently between the lines and serves as a cell for the liquid A portion of the grid voltage developed by the oscillator is filtered and then fed through a zero-set circuit to a suitable Brown recorder A manually

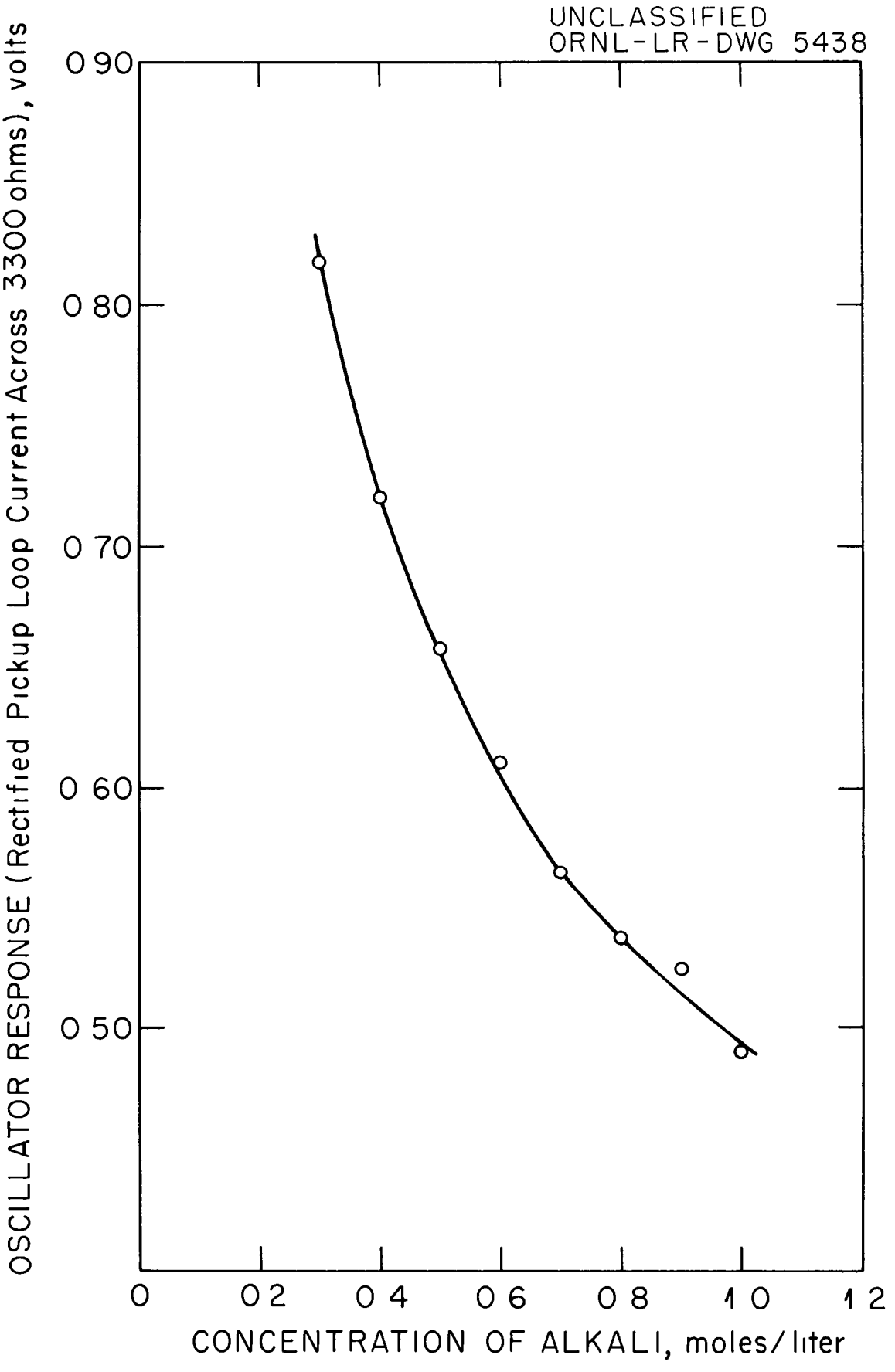

FIG 10 - TYPICAL CALIBRATION CURVE FOR THE TYPE 6J6 OSCILLATOR

operated potentiometer, such as a Leeds and Northrup or Rubicon, could also be used to measure this partial grid voltage The partial grid voltage developed by the oscillator is related to concentration of alkali by an empirical calibration curve Concentrations of the alkaline solutions used in establishing the calibration curve were determined by titration with standard acid to an indicator end point

In an oscillator of this design a cylinder of electrolyte is placed in the electric field between the lines thus enhancing the coupling of energy from the field It is more probable that the change of conductivity of the solution placed in the cell contributes a greater share to the change in oscillator response than does the change in dielectric constant An experiment, in which an 80-fold change in dielectric constant of essentially nonconducting fluids occurred, disclosed an insignificant change in the oscillator response Figure 11 indicates the close relationship of oscillator response to the specific conductance of the KOH solutions

In an effort to push the upper concentration limit to a higher value, a constant-current pentode was also added to the parallel-line oscillator This addition of a pentode in the cathode circuit enhanced the sensitivity of the oscillator (because of the decrease in the plate voltage allowed the oscillator upon loading) and increased the short-term grid-

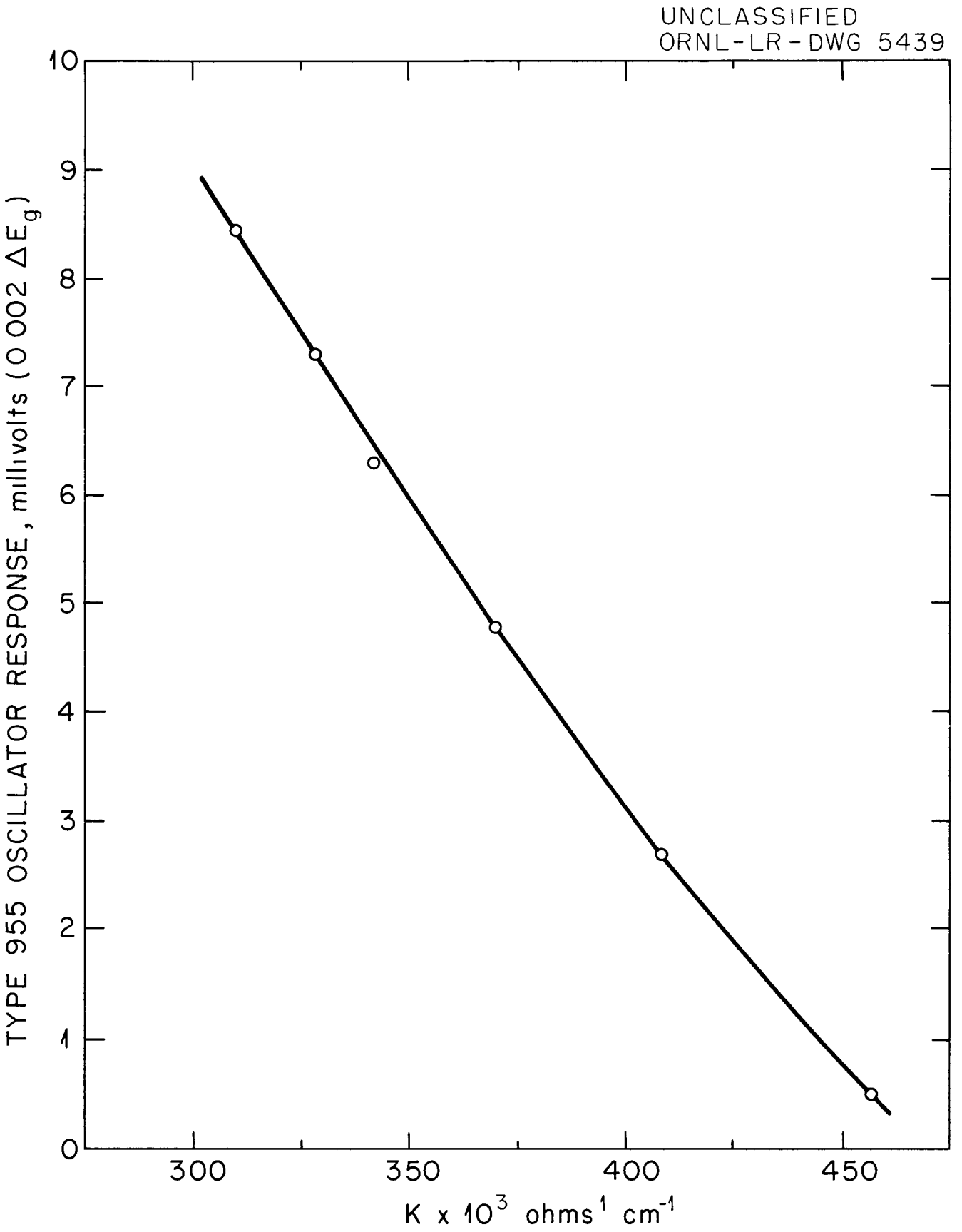

FIG 11 - OSCILLATOR RESPONSE versus SPECIFIC CONDUCTANCE OF AQUEOUS SOLUTIONS OF POTASSIUM HYDROXIDE

current stability by a factor of about two The type 955 tube appears to give optimum results when the plate voltage is in the range of 100 to 150 volts

In order to obtain a usable output for the Brown recorder, the question of using either a voltage divider across the grid-leak resistor or a bucking circuit was resolved in favor of the bucking circuit because it allowed a shift in the zero-point A mathematical examination (confirmed by experiment) demonstrated that no difference in minimization of drift existed between the alternative circuits

5 1 Experimental Testing

5 1 1 Sensitivity

The sensitivity of the instrument was determined by plotting a calibration curve of the oscillator response, as represented by the partial grid voltage displayed on the recorder, against the concentration of alkali in an aqueous solution A stock solution of 4 2 M KOH was made up from the solid material, and solutions of various KOH concentrations were obtained by dilution of this stock solution The concentration of each of the solutions used in calibration was determined by titration with standard HCl solution to the phenolphthalein end point

The experimental procedure consisted of flushing out the cell with several rinses of the KOH solution, filling the cell with this solution, recording the oscillator response, and titrating the liquid that produced

the response Either the initial response or the final response can be used, as long as consistency is employed, because about 15 minutes is required for the instrument to record a final steady value In the preliminary testing of the instrument, the initial response was recorded, and each of the calibration points was determined by averaging the results from several fillings of the cell (see Fig 12) The stability of the instrument is such that a variation of less than 0 05 mv existed in a series of twelve fillings of the cell Typical calibration curves of the constant-current instrument are illustrated in Figs 13 and 14

5 1 2 Stability

The stability of the instrument (both the constant-current and unmodified versions) was determined by long-term operation in which the Brown recorder was used for the observation of fluctuations Instrumental drifts of 0 3 mv, or less, over 30-hour periods were consistently observed when the sensitivity switch of the instrument was at the 50-ohm position This drift is magnified by a factor of 6 when the instrument is operated in the 300-ohm position At high sensitivity, the instrument does exhibit a temperature-induced variation that probably arises from a change in the conductivity of the solution This temperature dependence could be eliminated by thermostatting the cell Typical stability data are given in Table 2 and in Figs 15 and 16

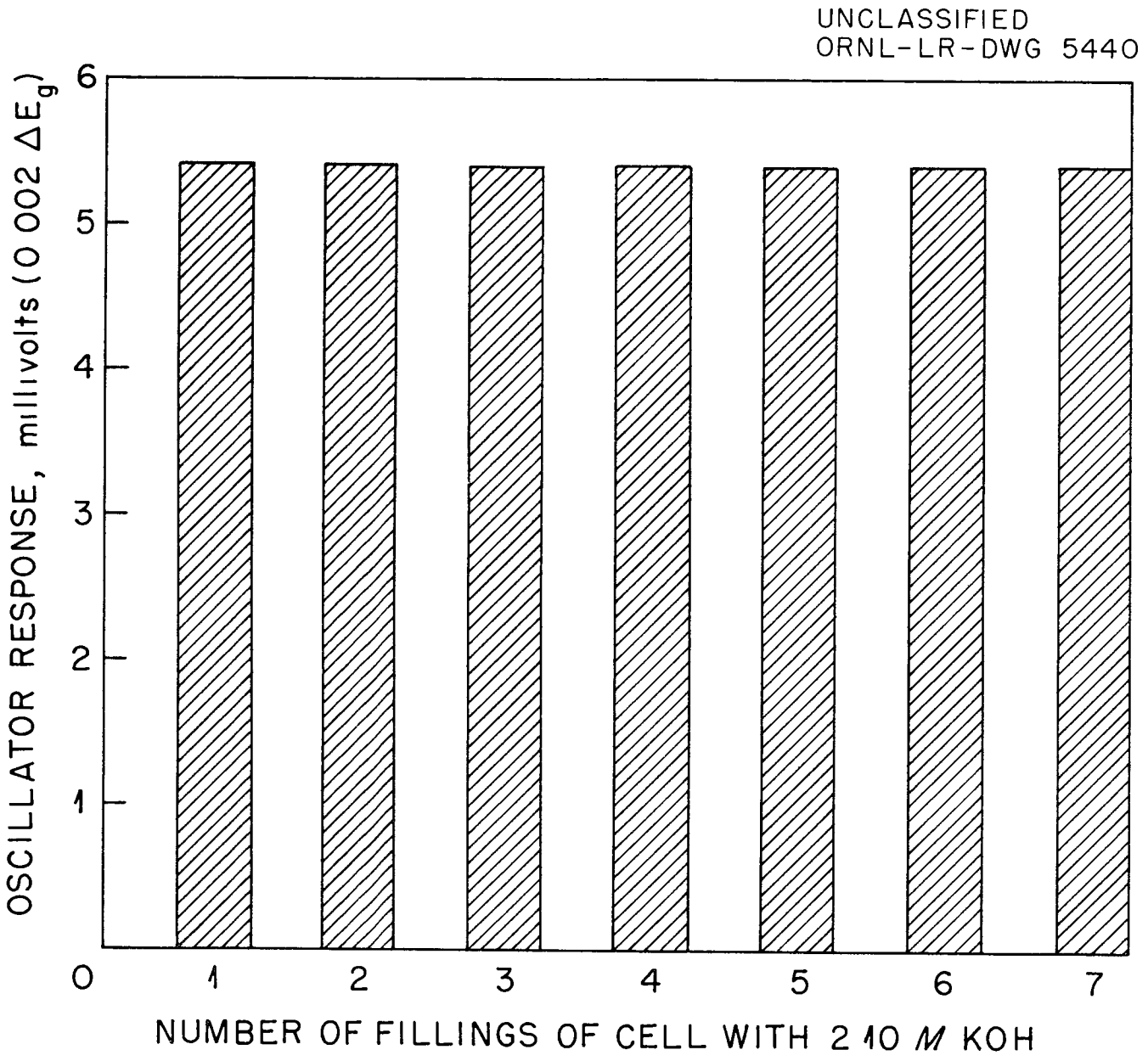

FIG 12 - INITIAL STABILITY CHARACTERISTICS OF THE CONSTANT-CURRENT TYPE 955 OSCILLATOR

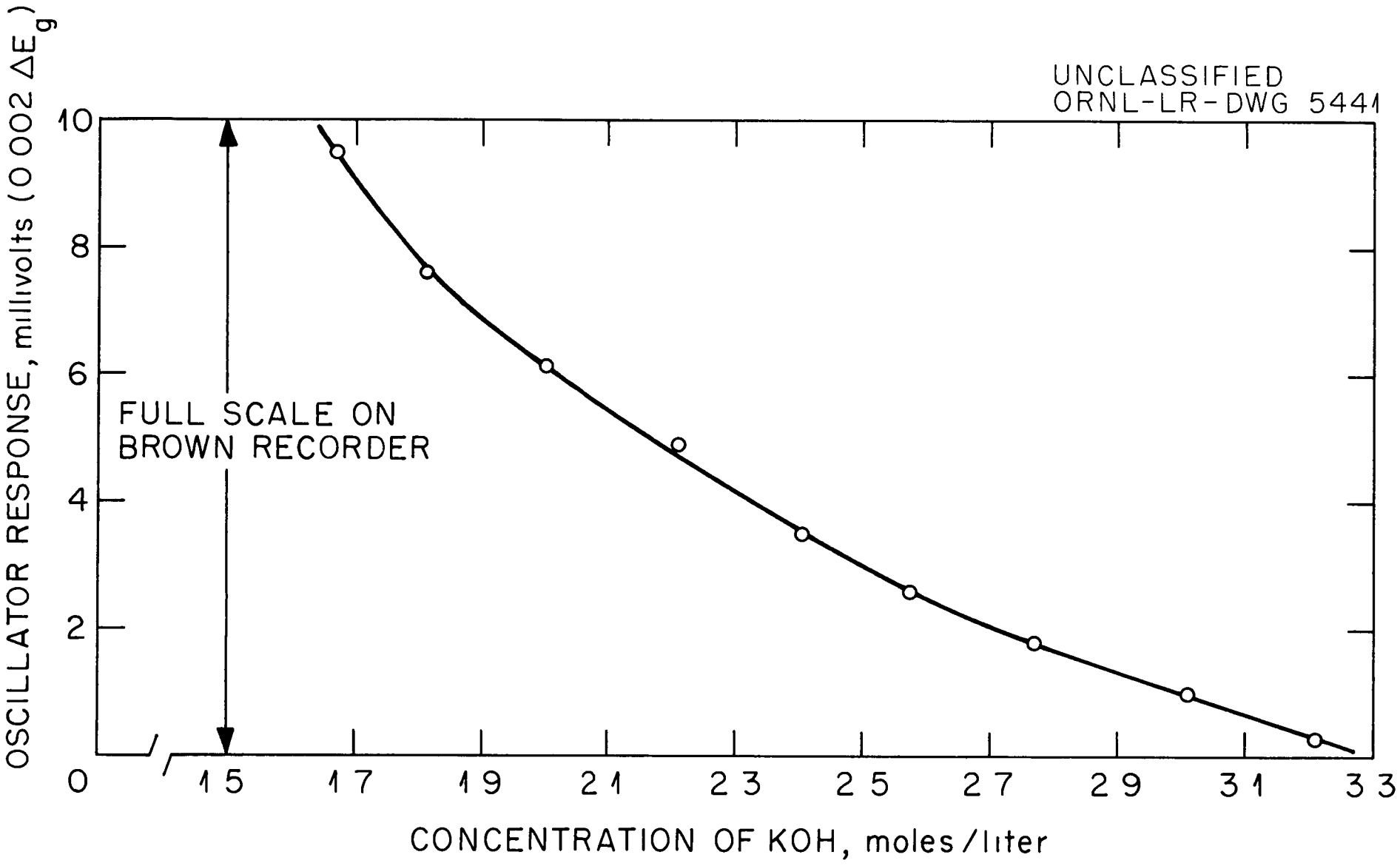

FIG 13 - TYPICAL CALIBRATION CURVE OF THE 235-MEGACYCLE OSCILLATOR FOR POTASSIUM HYDROXIDE (CONSTANT-CURRENT INSTRUMENT)

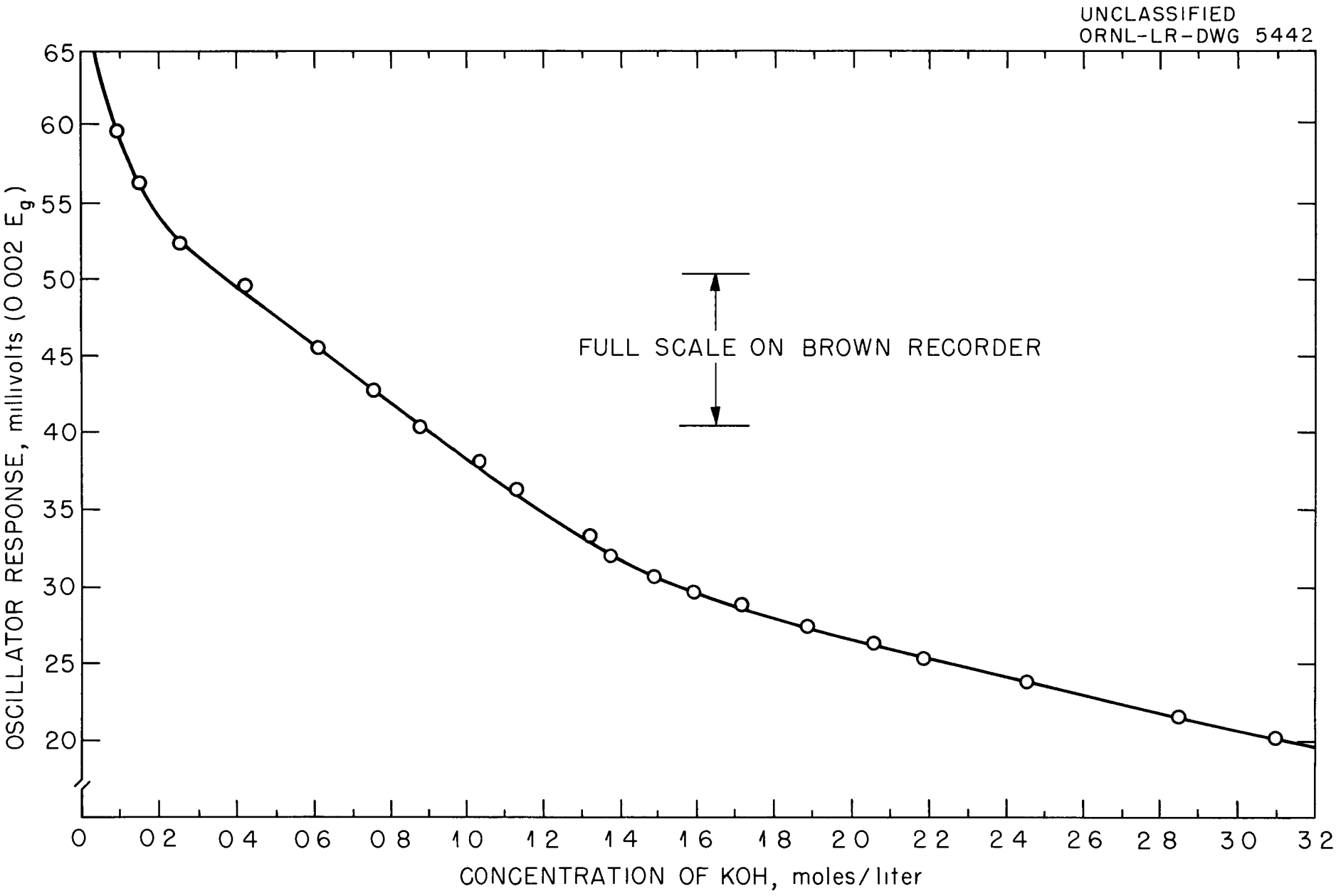

FIG 14 - TYPICAL CALIBRATION CURVE OF THE 235-MEGACYCLE OSCILLATOR FOR POTASSIUM HYDROXIDE (CONSTANT-CURRENT INSTRUMENT)

Table 2

Stability Data of Parallel Transmission-line Oscillators

Run Number	Type of Instrument	Time, hours	Measuring Resistor, ohms	Maximum Drift, mv
1	CCPTLO	48	50	0 1
2	CCPTLO	15	50	0 3
3	CCPTLO	22	50	0 2
4	PTLO	41	30	<0 1

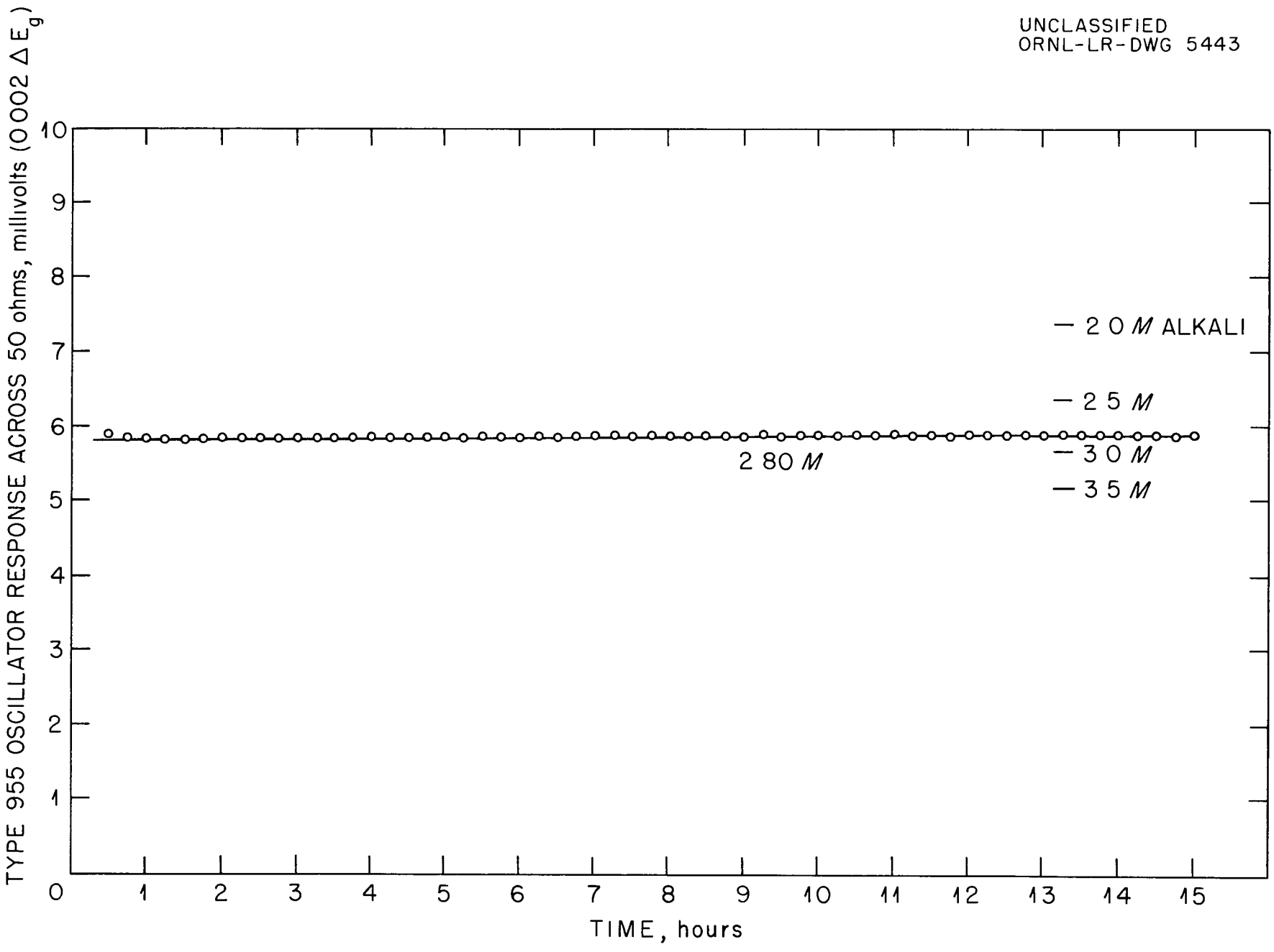

FIG 15 – STABILITY CHARACTERISTICS OF THE TYPE 955 CONSTANT-CURRENT PARALLEL TRANSMISSION-LINE OSCILLATOR

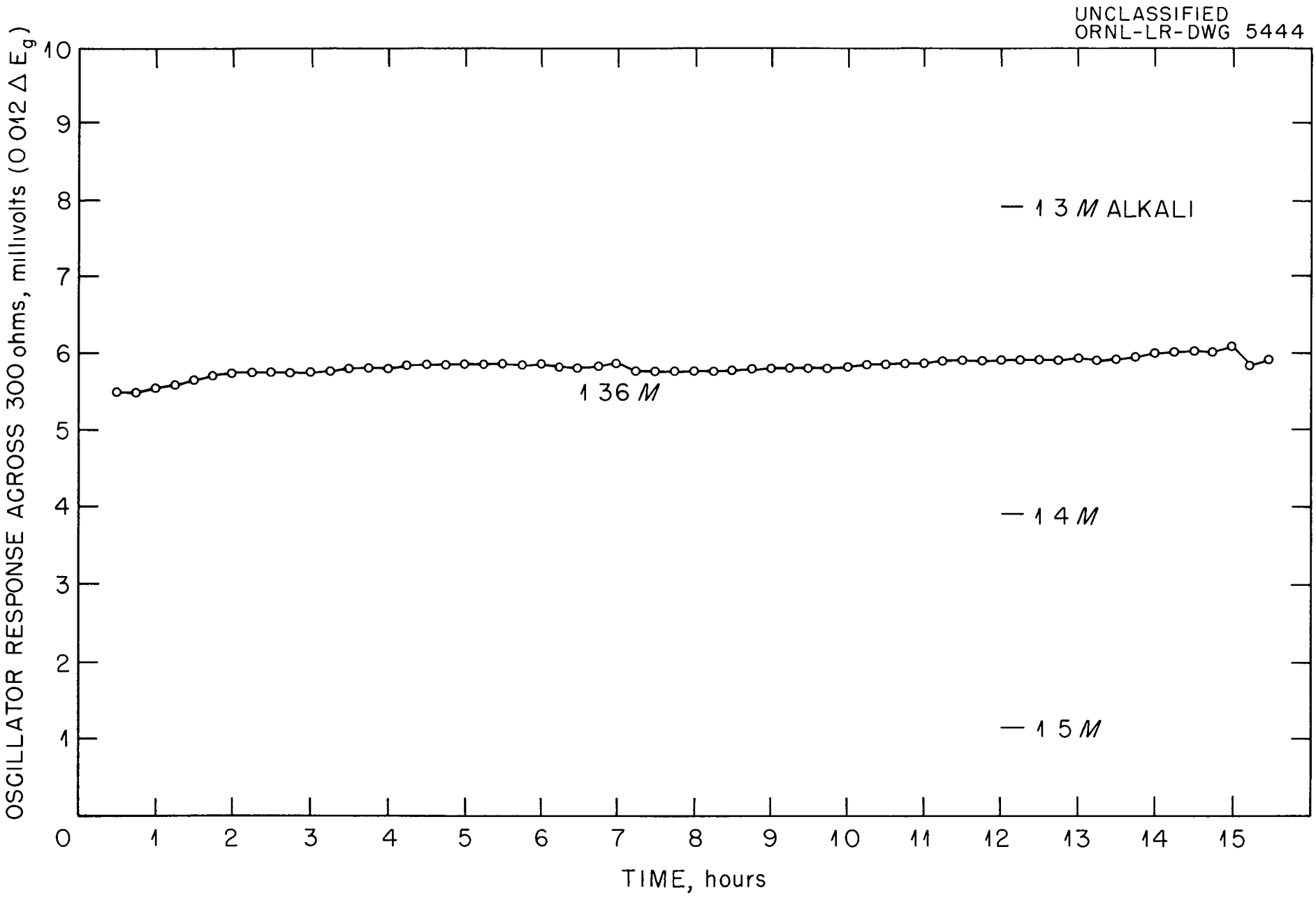

FIG 16 - STABILITY CHARACTERISTICS OF THE TYPE 955 CONSTANT-CURRENT PARALLEL TRANSMISSION-LINE OSCILLATOR

6.0 Conclusions

The parallel transmission-line oscillator has the following advantages

1 A high efficiency in the coupling of energy into the solution, i e , in the production of power losses in the dielectric medium surrounding the lines

2 A high degree of stability, enhanced in the lower concentration range where measuring resistors of lower values can be employed profitably

3 A high degree of sensitivity to changes in concentration up to about 2 5 M KOH

4 Reproducibility of an individual reading

5 Reproducibility of instrumentation

6 Simplicity of design

7 No contact of the instrument, other than the cell, with corrosive or turbid solutions

The parallel transmission-line oscillator has the following possible disadvantages

1 Shift in mode of oscillation, resulting in a change in oscillator response

2 Cessation of oscillations upon loading

3 Temperature sensitivity at high instrumental sensitivity

4 Design features based upon absolute tube characteristics

5 Calibration altered by presence of foreign electrolytes

If the parallel transmission-line oscillator is used without the constant-current modification (such operation is entirely feasible in the concentration range up to about 1 0 M), it has the advantages of simplicity, a high sensitivity to changes in alkali concentration, a high order of stability, reproducibility of instrumentation, and reproducibility of an individual reading The reproducibility of the instrumentation was demonstrated by the testing of three different oscillator sections (all operated at about 235 Mc) in the instrument These sections gave almost identical responses

If the parallel transmission-line oscillator is used with the constant-current modification, the concentration range can be extended upward to concentrations that approach 3 0 M, with all the above listed advantages except that of simplicity

An oscillator can shift from one mode of oscillation to another under the influence of circuit transients If the two modes have similar circuit losses, the oscillator prefers that mode in which the losses are least This shift in mode of oscillation could result in a discontinuity in the calibration curve if widely different grid currents were associated with the two modes of oscillation The parallel transmission-line oscillators exhibited relative freedom from these shifts in oscillator mode

Although the parallel transmission-line oscillator was loaded in taking power from the tank circuit so that the grid voltage of the type 955 tube increased from -20 to -1 volt, the oscillator was never observed to cease oscillating The presence of a negative grid voltage was taken as an indication of oscillation

When the instrument is operated at its highest sensitivity, a dependence of oscillator response on temperature appears, probably arising from a change in the conductance of the solution This temperature dependence could be removed by thermostatting the cell

It would be desirable to design an oscillator that would be independent of tube characteristics, but this does not appear possible with a self-excited oscillator The parallel transmission-line oscillator tolerates a considerable variation in the values of tube parameters Different type 955 tubes produce almost identical slopes for the calibration curves The Zero-set control can be used to correct for any variation in tube characteristics

The response of the parallel transmission-line oscillator depends upon the total conductance of the solution in the cell Any foreign electrolyte present in the cell solution will affect the oscillator response, thus causing an inaccuracy in the determination of the concentration of the alkaline species This criticism is applicable to any rf instrument that depends upon the loading of an oscillator, and it is not unique with the parallel transmission-line model

Use of the parallel transmission-line oscillator is not restricted to the analysis of alkaline solutions, although such solutions were employed in most of the above work As an example of the sensitivity of this rf instrument to measure the concentration of a different electrolyte, two solutions of NaCl of concentrations of 36 g per 100 ml and 18 g per 100 ml gave readings of 13 0 and 19 3 mv, respectively, a span of 6 3 mv in the oscillator response When strong solutions of aqueous sulfuric acid are placed in the cell, the parallel transmission-line oscillator is sensitive to changes in the sulfuric acid concentration Figure 17 gives a calibration curve for sulfuric acid in the very high concentration region

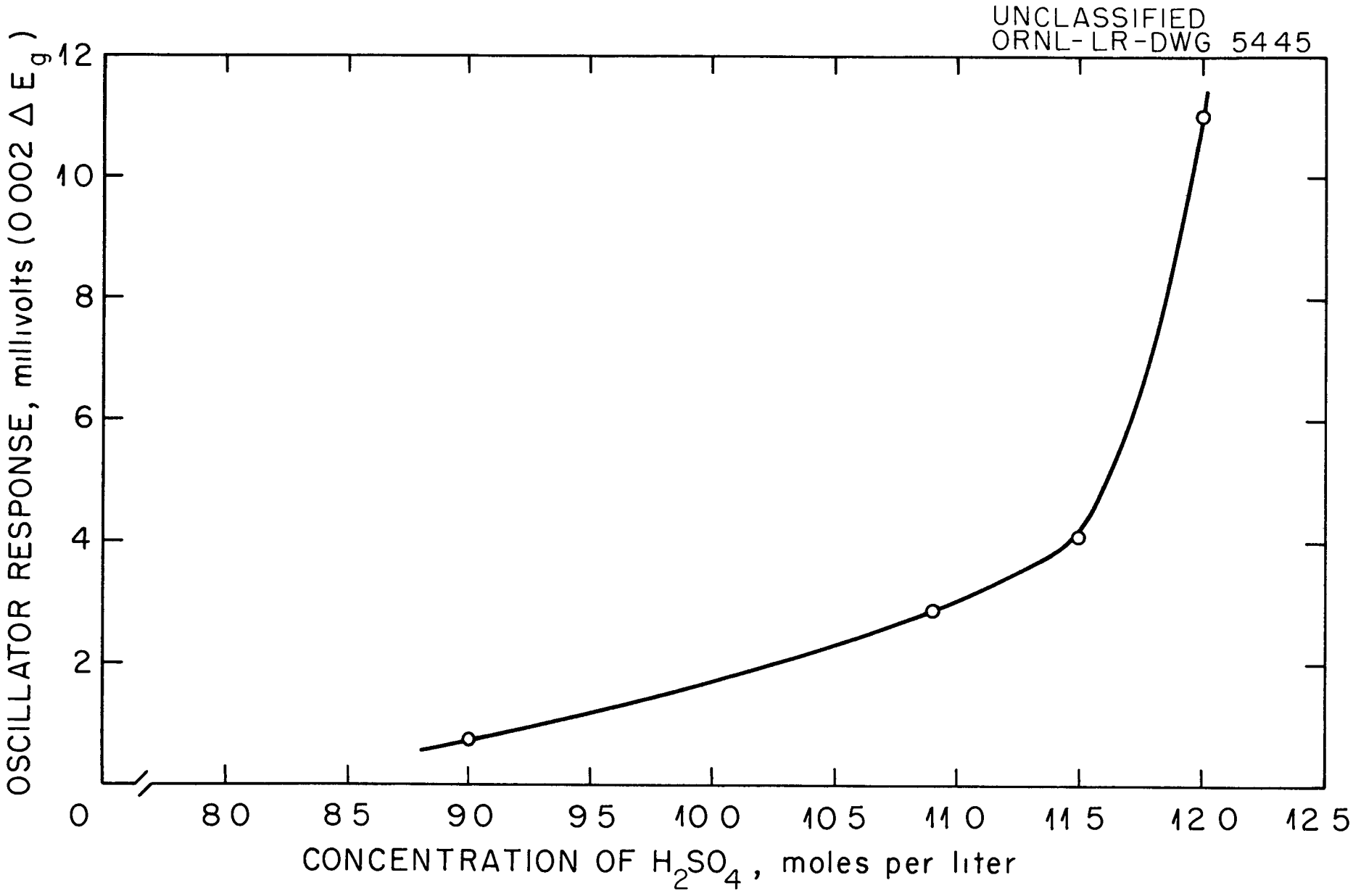

FIG 17 – CALIBRATION CURVE FOR THE TYPE 955 PARALLEL TRANSMISSION-LINE OSCILLATOR FOR SULFURIC ACID

7 0 References

1 Blaedel, W J and Malmstadt, H V , "High-Frequency Titrations", Anal Chem , 22, 1413 (1950)

2 Harley, J H and Wiberley, S E , Instrumental Analysis, p 300, John Wiley, New York, 1954

3 Terman, F E , Radio Engineering, 2nd ed , pp 362-363, McGraw-Hill Book Company, Inc , New York, 1937

4 Terman, F E , Radio Engineer's Handbook, p 192, McGraw-Hill Book Company, Inc , New York, Inc , New York, 1943