UNCLASSIFIED

CENTRAL RESEARCH LIBRARY
DOCUMENT COLLECTION

MARTIN MARIETTA ENERGY SYSTEMS LIBRARIES
3 4456 0360731 8

ORNL-1799
Metallurgy and Ceramics
Cy. 5

FLAMMABILITY OF SODIUM ALLOYS AT HIGH TEMPERATURES

G. P. Smith
M. E. Steidlitz
L. L. Hall

CENTRAL RESEARCH LIBRARY
DOCUMENT COLLECTION

LIBRARY LOAN COPY

DO NOT TRANSFER TO ANOTHER PERSON

If you wish someone else to see this document, send in name with document and the library will arrange a loan.

OAK RIDGE NATIONAL LABORATORY
OPERATED BY
CARBIDE AND CARBON CHEMICALS COMPANY
A DIVISION OF UNION CARBIDE AND CARBON CORPORATION
UCC
POST OFFICE BOX P
OAK RIDGE, TENNESSEE

UNCLASSIFIED

ORNL-1799

Copy No. 5

Contract No. W-7405-eng-26

METALLURGY DIVISION

FLAMMABILITY OF SODIUM ALLOYS AT HIGH TEMPERATURES

G. P. Smith, M. E. Steidlitz, and L. L. Hall

(The research covered by this report was conducted at intervals between July 1952 and July 1954.)

DATE ISSUED

JUN 15 1955

OAK RIDGE NATIONAL LABORATORY
Operated by
CARBIDE AND CARBON CHEMICALS COMPANY
A Division of Union Carbide and Carbon Corporation
Post Office Box P
Oak Ridge, Tennessee

MARTIN MARIETTA ENERGY SYSTEMS LIBRARIES
3 4456 0360731 8

INTERNAL DISTRIBUTION

1. C. E. Center
2. Biology Library
3. Health Physics Library
4. Metallurgy Library
5-6. Central Research Library
7. Reactor Experimental Engineering Library
8-12. Laboratory Records Department
13. Laboratory Records, ORNL R.C.
14. C. E. Larson
15. L. B. Emlet (K-25)
16. J. P. Murray (Y-12)
17. A. M. Weinberg
18. E. H. Taylor
19. E. D. Shipley
20. F. C. VonderLage
21. W. H. Jordan
22. S. J. Cromer
23. C. P. Keim
24. J. H. Frye, Jr.
25. R. S. Livingston
26. J. A. Swartout
27. S. C. Lind
28. F. L. Culler
29. A. H. Snell
30. A. Hollaender
31. M. T. Kelley
32. K. Z. Morgan
33. J. A. Lane
34. T. A. Lincoln
35. A. S. Householder
36. C. S. Harrill
37. C. E. Winters
38. D. S. Billington
39. D. W. Cardwell
40. W. D. Manly
41. E. M. King
42. A. J. Miller
43. D. D. Cowen
44. R. A. Charpie
45. M. L. Picklesimer
46. M. J. Skinner
47. G. C. Williams
48-49. P. M. Reyling
50. E. J. Boyle
51. G. M. Adamson
52. C. R. Boston
53. W. H. Bridges
54. J. V. Cathcart
55. E. E. Hoffman
56. I. Inouye
57. P. Patriarca
58. M. E. Steidlitz
59-63. G. P. Smith
64. G. Petersen
65. H. F. Poppendiek
66. H. W. Savage
67. J. H. Greene
68. F. Heddleson
69. N. J. Grant (consultant)
70. E. Creutz (consultant)
71. T. S. Shevlin (consultant)
72. ORNL Document Reference Library, Y-12 Branch

EXTERNAL DISTRIBUTION

73. R. F. Bacher, California Institute of Technology
74. Division of Research and Medicine, AEC, ORO
75-369. Given distribution as shown in TID-4500 under Metallurgy and Ceramics category

DISTRIBUTION PAGE TO BE REMOVED IF REPORT IS GIVEN PUBLIC DISTRIBUTION

FLAMMABILITY OF SODIUM ALLOYS AT HIGH TEMPERATURES

G. P. Smith M. E. Steidlitz L. L. Hall

SUMMARY

This report gives data on the flammability in air of jets of sodium alloys at temperatures from 600 to 800°C. Most sodium alloys are highly reactive under these conditions, but it has been found that sodium alloys containing mercury or bismuth are nonflammable over certain ranges of composition and temperature.

INTRODUCTION

The physical properties of alkali metals should make them especially attractive as heat-transfer media; however, their extreme reactiveness with air is a serious drawback to their application. The late Dr. R. C. Briant suggested that there might exist alloys which contain sufficient sodium to be useful as heat-transfer media but which would, at the same time, be much less flammable than pure sodium. In particular, he recommended an investigation of the sodium-mercury system; the results of such an investigation are reported here.

One of the most hazardous situations that can be encountered in using liquid sodium as a heat-transfer medium is the development of even a very small leak in a plumbing system which is exposed to air at high temperatures. The sodium oxide which forms around such a leak acts as a flux on the normally protective scale on the metal near the hole, and hence the scale becomes nonprotective toward further oxidation. At the high temperatures developed by the burning of the sodium, the hole rapidly enlarges. Liquid sodium in a heat-transfer system is usually under pressure, and it therefore issues from a leak as a jet which burns violently. Such jets are much more reactive than quiescent pools, partly because the surface area of the droplets in the jet is large and partly because a clean liquid surface is continually being exposed near the origin of the jet. Both factors greatly increase the rate of formation of sodium vapor, and, hence, both greatly increase the reactivity of the liquid. Therefore it was decided to study the reactivity of liquid jets rather than quiescent pools to provide a realistic and severe test of flammability.

It should be noted that the reaction of sodium vapor with oxygen is a particularly complicated type of flame reaction. Inasmuch as the oxides of sodium are not stable in the vapor phase, as was shown by Brewer and Margrave,[1] the reaction occurs only at the surface of the condensing reaction product.

EXPERIMENTAL PROCEDURES

The heated alloy was ejected downward through a small orifice into a large steel chamber. The chamber had previously been evacuated and filled with dry air at a pressure of 0.25 to 1 atm to give a measured dew point of −43°C. The experimental layout is shown schematically in Fig. 1. At the end of an experiment, exhaust gases from the chamber were passed through a dust filter to remove metal oxide smoke and then through a Hopcalite filter to remove the mercury vapor that formed when sodium-mercury alloys were burned.

In all experiments the amount of oxygen in the chamber was from 3 to 30 times the amount required for complete oxidation of the sodium present. The time-of-flight of a jet through the reaction chamber was always so short that only a fraction of the sodium which could have reacted actually did so. The jets contained a significant quantity of small droplets, as shown in motion pictures taken at 700 frames per second.

EXPERIMENTAL RESULTS

Binary Systems. The following binary-solution systems were studied: sodium-bismuth, sodium-cadmium, sodium-indium, sodium-lead, sodium-

[1] L. Brewer and J. Margrave, *Vaporization of Alkali Metal Oxides*, UCRL-1864 (July 1, 1952).

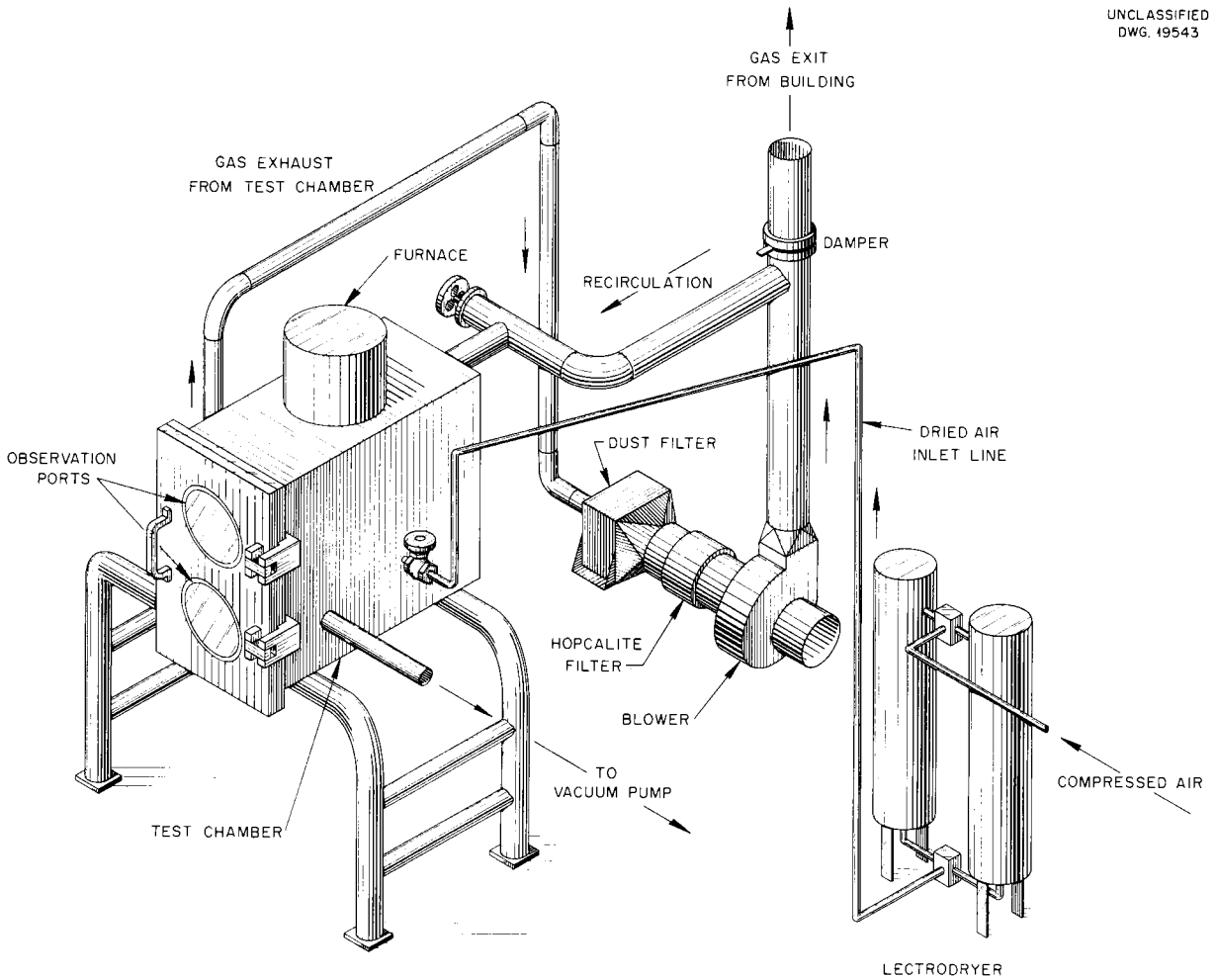

Fig. 1. Apparatus for Experimental Study of the Flammability of Sodium Jets.

mercury, sodium-silver, and sodium-tin. The reaction between air and jets of sodium solutions was usually vigorous. It was accompanied by a flame, a dense smoke of reaction products, and, when especially high temperatures and large sodium contents were used, a weak explosion.

Solutions of sodium and bismuth reacted vigorously when the sodium concentration was high; however, at low sodium concentrations and sufficiently low temperatures, the reaction was negligible, as was evidenced by the absence of both flame and smoke. The relative reactivity of sodium-bismuth solutions with dry air at 700°C as a function of the mole fraction of sodium is shown in Fig. 2. The relative reactivity scale is arbitrary – pure sodium was assigned a reactivity of four units, and unreactive solutions were assigned a reactivity of zero. Measurements were not made at 700°C for mole fractions of sodium above 0.6 because a solid compound of composition Na_3Bi precipitates from the sodium-bismuth solution at a mole fraction of sodium somewhat greater than 0.6.

A temperature vs composition diagram for liquid sodium-bismuth solutions is presented in Fig. 3. The curve approximately separates the region of reaction from the region of negligible reaction. The circles and triangles on this diagram represent the temperature-composition values at which tests were conducted. Most of the circles represent two to four tests each. The open circles represent tests in which reaction occurred, while the shaded

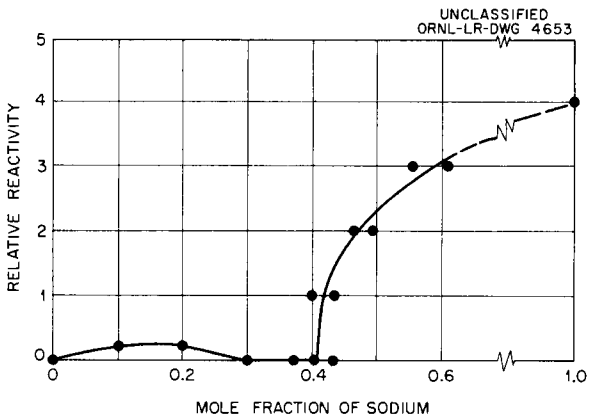

Fig. 2. The Relative Reactivity of Sodium-Bismuth Solutions with Dry Air at 700°C.

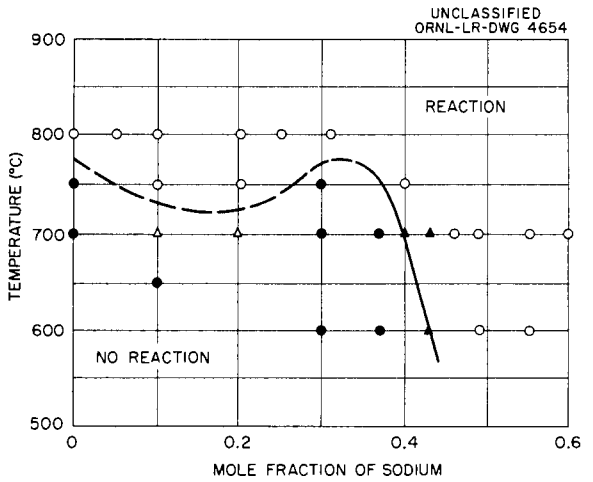

Fig. 3. Temperature vs Composition Diagram for Sodium-Bismuth Solutions.

circles represent those which showed no reaction. The shaded triangles represent conditions under which part of the tests showed no reaction, while the rest showed a slight reaction. The open triangles represent tests which showed very slight reaction. The dotted portion of the curve is poorly defined, inasmuch as it may actually pass beneath the open triangles rather than above them as shown. Jets of pure bismuth showed appreciable reactivity at 800°C but not at 750°C.

The reactivity of sodium-mercury solutions was likewise dependent on composition. At both 600 and 700°C the line of no reactivity lay between sodium mole fractions of 0.25 and 0.35. The test method was less sensitive for solutions containing mercury than for solutions containing bismuth, especially at temperatures above 700°C, because of the formation of dense fogs of liquid mercury.

When the air was saturated with water vapor, the line of zero reactivity was shifted toward lower sodium concentrations by a small but appreciable amount for both sodium-bismuth and sodium-mercury solutions. This effect is shown for sodium-bismuth solutions at 700°C in Fig. 4. In this figure, test data for moist air are plotted (represented by circles), together with a curve representing the results for dry air. It may be seen that although the data for moist air scatter badly, there is unquestionably a small shift toward lower sodium concentrations. Changing the pressure of the air from 1 to 0.25 atm did not produce an appreciable change in the reactivity of sodium-bismuth or of sodium-mercury solutions.

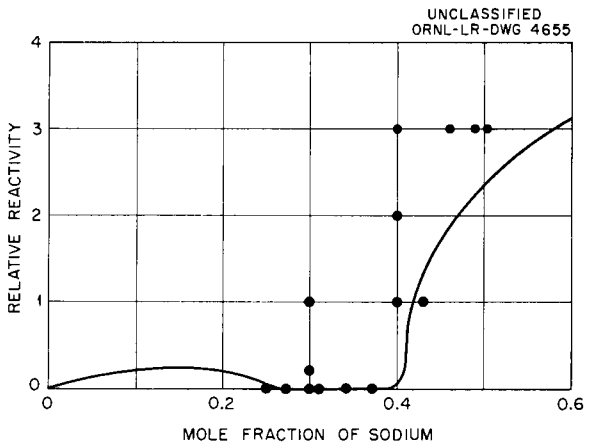

Fig. 4. The Effect of Moisture on the Relative Reactivity of Sodium-Bismuth Solutions with Air at 700°C.

The five other binary systems listed above were tested only at 700°C in dry air at 1 atm pressure for a mole fraction of sodium of 0.1. All these systems showed considerable reaction. For some solutions, such as sodium-silver, only the sodium reacted, while for others, such as sodium-cadmium, the second component also reacted. In the latter cases, it is possible that at lower temperatures there is a region of negligible reactivity.

Ternary Systems. The effect of third constituents on the reactivity of sodium-bismuth and sodium-mercury solutions was studied at 700°C, and all the ternary solutions studied were found to be reactive. The compositions tested were: solutions containing 30 mole % sodium, 65 mole % mercury, and 5 mole % potassium, calcium, magnesium, copper, aluminum, bismuth, or silver; and solutions containing 45 mole % sodium, 50 mole % bismuth, and 5 mole % potassium, calcium, magnesium, copper, mercury, or silver.

Quiescent Solutions. No special efforts were made to study the reactivity of quiescent solutions as compared with jets. However, at the end of each experiment, a stagnant pool of unreacted liquid collected in the bottom of the reaction chamber, and one interesting observation was made. These pools showed much less tendency to burn in moist air than in dry air. This effect of moisture, which is the reverse of that observed for jets, is attributed to the formation of a coherent crust of reaction products in the presence of moisture.

ACKNOWLEDGMENT

The authors are indebted to R. W. Anderson, J. H. Greene, J. L. Gregg, F. Heddleson, and H. T. Murrin for assistance and advice on various aspects of the research.