UNCLASSIFIED

CENTRAL RESEARCH LIBRARY
DOCUMENT COLLECTION

MARTIN MARIETTA ENERGY SYSTEMS LIBRARIES
3 4456 0360735 4

ORNL-1828
Instrumentation
Cy. 4

A COMBINATION ISOTHERMAL-ADIABATIC LOW-TEMPERATURE CALORIMETER

R. H. Busey

CENTRAL RESEARCH LIBRARY
DOCUMENT COLLECTION
LIBRARY LOAN COPY
DO NOT TRANSFER TO ANOTHER PERSON
If you wish someone else to see this document, send in name with document and the library will arrange a loan.

OAK RIDGE NATIONAL LABORATORY
OPERATED BY
CARBIDE AND CARBON CHEMICALS COMPANY
A DIVISION OF UNION CARBIDE AND CARBON CORPORATION
UCC
POST OFFICE BOX P
OAK RIDGE, TENNESSEE

UNCLASSIFIED

ORNL-1828

Copy No. 4

Contract No. W-7405-eng-26

Chemistry Division

A COMBINATION ISOTHERMAL-ADIABATIC LOW-TEMPERATURE CALORIMETER

R. H. Busey

Date Issued: JAN 26 1955

OAK RIDGE NATIONAL LABORATORY
Operated by
CARBIDE AND CARBON CHEMICALS COMPANY
A Division of Union Carbide and Carbon Corporation
Post Office Box P
Oak Ridge, Tennessee

MARTIN MARIETTA ENERGY SYSTEMS LIBRARIES

3 4456 0360735 4

INTERNAL DISTRIBUTION

1. C. E. Center
2. Biology Library
3. Health Physics and Metallurgy Library
4-5. Central Research Library
6. Reactor Experimental Engineering Library
7-11. Laboratory Records Department
12. Laboratory Records, ORNL R.C.
13. C. E. Larson
14. L. B. Emlet (K-25)
15. J. P. Murray (Y-12)
16. A. M. Weinberg
17. E. H. Taylor
18. E. D. Shipley
19. S. C. Lind
20. F. C. VonderLage
21. C. P. Keim
22. J. H. Frye, Jr.
23. R. S. Livingston
24. S. J. Cromer
25. J. A. Swartout
26. F. L. Culler
27. A. H. Snell
28. A. Hollaender
29. M. T. Kelley
30. G. H. Clewett
31. K. Z. Morgan
32. T. A. Lincoln
33. A. S. Householder
34. C. S. Harrill
35. C. E. Winters
36. D. W. Cardwell
37. E. M. King
38. D. D. Cowen
39. D. S. Billington
40. J. A. Lane
41. M. J. Skinner
42. W. H. Jordan
43. G. E. Boyd
44. R. H. Busey
45. R. W. Dodson (consultant)
46. H. Eyring (consultant)
47. V. Schomaker (consultant)
48. J. W. Kennedy (consultant)
49. G. T. Seaborg (consultant)
50. ORNL Document Reference Library, Y-12 Branch

EXTERNAL DISTRIBUTION

51. D. C. Ginnings, National Bureau of Standards
52. G. T. Furukawa, National Bureau of Standards
53. R. F. Bacher, California Institute of Technology
54. Division of Research and Medicine, AEC, ORO
55-294. Given distribution as shown in TID-4500 under Instrumentation category

DISTRIBUTION PAGE TO BE REMOVED IF REPORT IS GIVEN PUBLIC DISTRIBUTION

Table of Contents

	Page
Abstract	1
Introduction	2
Description of the Cryostat	3
Description of Lead Wires and Heaters	8
Thermocouples and Differential Thermocouples	10
Electrical Circuits	11
Calibration of the Standard Thermocouples	15
Testing the Operation of the Calorimeter	18
Acknowledgment	27

Abstract

A description of a low-temperature calorimeter for the temperature range 13° to 300°K is presented. The apparatus is believed to be unique in that it may be readily operated in an isothermal or adiabatic manner.

The performance of the calorimeter is demonstrated by presentation of heat capacity measurements on a Calorimetry Conference Standard Sample of benzoic acid. The data obtained agree well with the published data of the National Bureau of Standards on this Standard.

The adiabatic and isothermal data are shown to agree well within the experimental error except at higher temperatures where the results by the latter procedure are slightly more erratic.

This report describes the construction and performance of a low-temperature calorimeter built at the Oak Ridge National Laboratory to measure heat capacities from 13° to 320°K. The calorimeter is considered unique in that it has been designed and constructed to operate either in an adiabatic or in an isothermal manner. An over-all guiding principle in the design has been to make the apparatus as flexible as possible.

A conventional isothermal calorimeter operates in the following manner: a thermally isolated, massive container, usually referred to as a block, completely surrounds the calorimeter proper. To make a heat capacity measurement, the block is heated to a temperature approximately midway between the initial and the final temperature that the calorimeter will attain during the course of the measurement. An accurate measurement of the temperature drift of the calorimeter with time is made for a period before energy input; energy is then supplied to the calorimeter electrically, and observations are again made of the temperature drift of the calorimeter. The block is then heated again and the process repeated. From these measurements, an accurate measure of the net energy transferred to the calorimeter is computed.

A conventional adiabatic calorimeter operates in the following manner: a fairly lightweight shield completely surrounds the calorimeter with a differential thermocouple between the two. During the course of a heat capacity measurement, the temperature of the shield is maintained equal to that of the calorimeter at all times by use of electrical heat and the differential thermocouple. The results are then computed on the assumption that there was no heat interchange between the calorimeter and its surroundings except that supplied electrically.

It is anticipated that the calorimeter will be used to measure the low temperature heat capacity of several substances which will exhibit anomalies or transitions in their heat capacities. For instance, certain paramagnetic salts will be measured which probably will undergo the transition from the anti-ferromagnetic to the paramagnetic state. It is advantageous to be able to measure such transitions both isothermally and adiabatically. Establishment of temperature equilibrium in such a transition region may be slow enough after energy input to make it difficult to determine at what temperature to maintain the adiabatic shield; i.e., a non-uniform surface temperature may persist after the energy input. Such a condition causes no difficulty for the isothermal method.

This calorimeter has been constructed for the principal purpose of making measurements on rhenium and technetium compounds in order to extend the thermodynamic and magnetic studies[1] on these compounds undertaken in this Laboratory. This report describes results obtained using a macro-calorimeter, but as will be observed from the description given here, the

---

(1a) C. M. Nelson, G. E. Boyd, and W. T. Smith, Jr., J. Am. Chem. Soc., 76, 348 (1954).

(1b) J. W. Cobble, G. D. Oliver, and W. T. Smith, Jr., J. Am. Chem. Soc., 75, 5786 (1953), and preceding papers of this series.

low temperature cryostat is well suited to operate utilizing a semi-micro-calorimeter which is necessitated by the limited supply of technetium.

Description of the Cryostat

Figure 1 shows a schematic drawing of the apparatus. It resembles the cryostat of Westrum, Hatcher, and Osborne[2] in that a second adiabatic shield has been placed around the calorimeter proper. The cryostat differs, however, in the following respects: (1) the second adiabatic shield is made more massive, (2) exchange gas is employed for cooling in place of a thermal switch, (3) liquid hydrogen is used to obtain the lowest temperature instead of liquid helium, (4) a large silvered Pyrex Dewar is employed in place of their outer radiation shield.

The Pyrex Dewar, 10, is supported by an aluminum metal foot, 23, and is housed in the monel container, 9, which is provided with lifting handles, 13, and is bolted to the floor via its foot, 24. The cover plate, 7, is bolted to the flanged top of the container and makes a vacuum tight joint by use of a flat neoprene gasket, 8. The monel container, made from 16-gauge monel sheet metal, is evacuated via the 25 mm o.d. monel tube, 28, and is strengthened by the steel rings, 11.

The two refrigeration tanks, shields, and calorimeter are suspended from the cover plate, 7, by the monel tubes to be described below. The assembly inside the Dewar is removed with the aid of the lifting eyes, 6.

The lower refrigeration tank of 1.0 liter capacity, 16, is constructed of 2.5 mm copper and is nickel-plated on the outside. The tank is serviced by three monel tubes: 30 is a 4.7 mm o.d. monel tube for removal of refrigerants from the tank, 29 is a 4.7 mm o.d. monel tube for venting or pumping on the tank, and 14 is a 19 mm o.d. monel tube through which a metal vacuum jacketed transfer tube to the tank is placed (transfer tube is not shown on the drawing). Each of these tubes, in addition to the 25 mm o.d. tube discussed below, has thin walls in that portion of their length between lower and upper tanks to reduce heat transfer between the two tanks. The lower tank radiation shield, 31, made of 1.5 mm copper and gold-plated on the inside and outside, is soldered with Wood's metal to the bottom of the lower tank to afford excellent thermal contact with the refrigerant tank. This Wood's metal joint is also made vacuum tight.

The upper refrigeration tank of 1.5 liters capacity, 12, is also made of 2.5 mm copper, nickel-plated on the outside. A 4.7 mm o.d. tube (not shown) similar to 29 of the lower tank serves as vent or pump line for the upper tank. A 19 mm o.d. tube (also not shown) serves a purpose on the upper tank similar to 14 on the lower tank. The upper tank radiation shield, 15, made of 1.5 mm copper and nickel-plated on the inside and outside, is soldered to the upper tank by Wood's metal to give excellent thermal contact. Four holes of 3.5 mm d. in the bottom of the radiation shield permit the evacuation of the space between the two refrigeration tanks.

---

(2) E. F. Westrum, Jr., J. B. Hatcher, and D. W. Osborne, J. Chem. Phys., 21, 419-423 (1953).

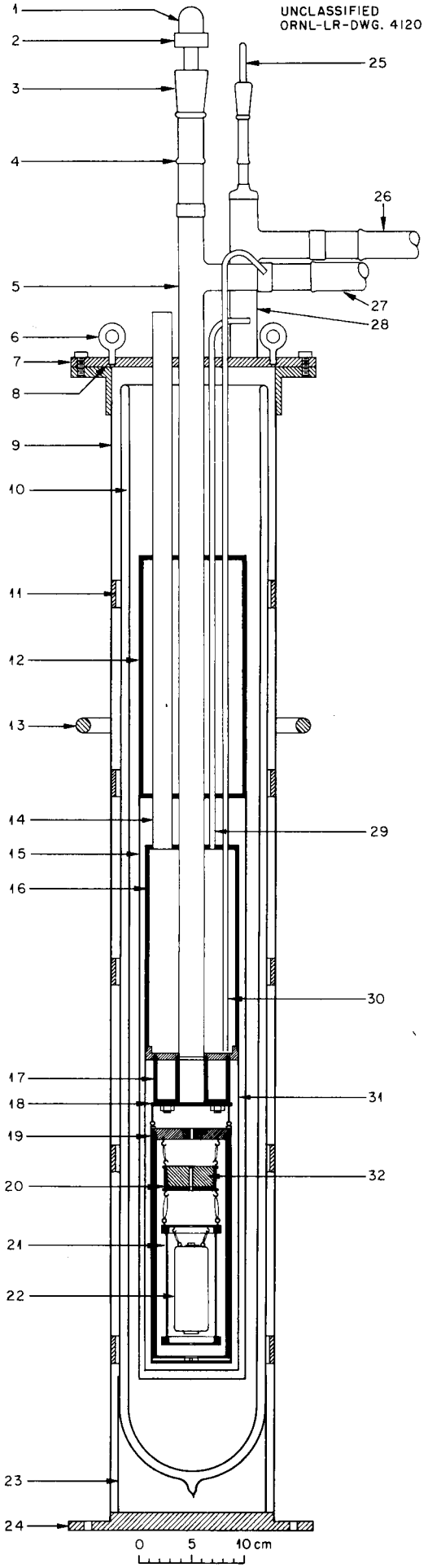

FIGURE 1
LOW TEMPERATURE CALORIMETER

All the joints of the refrigeration tanks and the joints between the monel tubes and the tanks are silver soldered, over which soft solder has been applied. All of these monel tubes servicing the refrigeration tanks are silver soldered through the cover plate, 7.

The 25 mm o.d. monel tube, 5, serves as the pumping line to the calorimeter proper and the shields and also serves as a conduit for the thermocouple wires and the lead wires going to the shield heaters and resistance thermometer. This tube also contains two radiation reflectors in the form of spirals (not shown) to reflect radiation coming from above to the refrigeration tanks. A final baffle to radiation coming down the tube is a gold-plated copper disk, 18. A further description of this disk and the three copper posts, 17, soldered to the bottom of the lower tank will be given below in connection with the wiring details.

The auxiliary shield or block, 19, is suspended from the copper disk, 18, by heavy nylon cord and is shown in more detail in Figure 2. It contains 13.0 moles (2690 g) of lead to increase its heat capacity at the lowest temperatures and 16.4 moles (1040 g) of copper, and it is heavily gold plated and polished. The top is a ground taper fit into the lower portion, the two portions being held in good thermal contact by use of three eye bolts and a small amount of vaseline on the tapered joint. Six radial holes (3 mm d.) in the base permit evacuation of the space inside the auxiliary shield. The tapered copper plug with the hole through it, and the tapered copper ring surrounding it, serve to bring wires from outside to inside the auxiliary shield. This shield is similar to the block used by Giauque and co-workers.(3)

The lead wire block, 20 of Figure 1, is suspended from the top of the auxiliary shield by three nylon cords. It is composed of 0.9 mole (190 g) of lead, 32, and 3.3 moles (210 g) of copper, 20, and is gold plated.

The adiabatic shield, 21 of Figure 1, is shown in more detail in Figure 3. It is made of 1.5 mm gold-plated copper. The ends are taper ground to give good thermal contact and are held securely in position by steel eye bolts and screws for the top and bottom, respectively. It is suspended inside the auxiliary shield from the lead wire block by means of three nylon cords. The shield contains 4.6 moles (290 g) of copper.

The calorimeter proper, 22, is suspended by three nylon threads from the top of the adiabatic shield. A detailed description of the calorimeter is reserved for the section below dealing with the performance of the calorimeter.

The two vacuum lines servicing the cryostat are connected at 26 and 27.

---

(3) W. F. Giauque and C. J. Egan, J. Chem. Phys., 5, 45 (1937).

UNCLASSIFIED
ORNL-LR-DWG. 4119

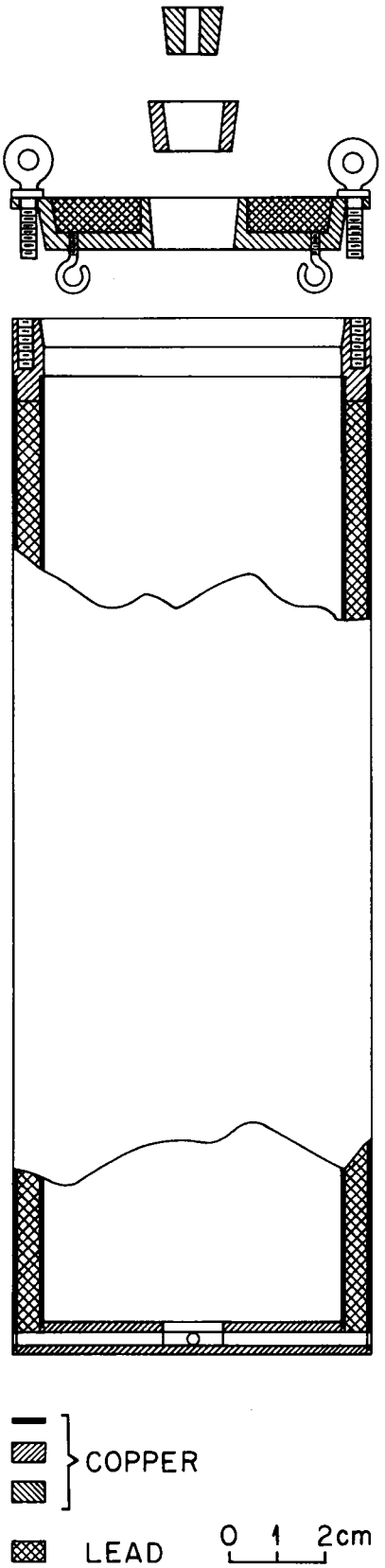

FIGURE 2
AUXILIARY SHIELD

UNCLASSIFIED
ORNL-LR-DWG. 4408

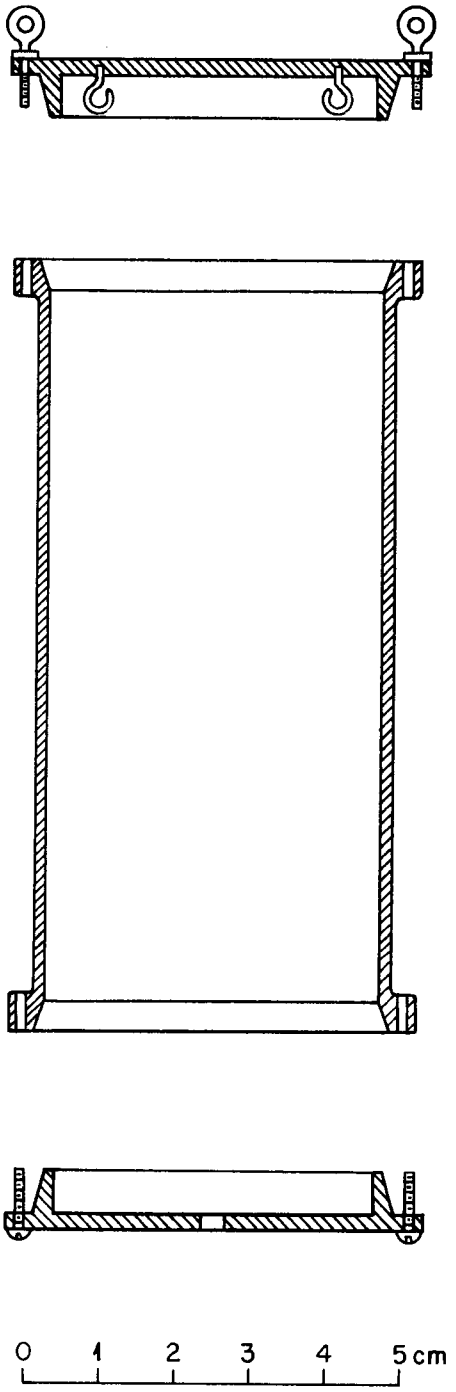

FIGURE 3
ADIABATIC SHIELD

Description of Lead Wires and Heaters

The lead wires for the shield heaters, resistance thermometer, and the differential thermocouples are made from B. and S. No. 32, enameled, single silk covered, copper thermocouple wire distributed by the Leeds and Northrup Company. Prior to installation, this wire was soaked in a solution of equal parts of General Electric Company adhesive 7031 (hereafter referred to as G. E. adhesive), ethyl alcohol, and toluene, and was then air dried.

All lead wires and thermocouples enter the vacuum system of the cryostat by way of the lucite plugs, 2 and 25 of Figure 1. The lucite plugs are patterned after those of Johnston[4] and co-workers. A detail of one of the plugs is shown in Figure 4. Thermocouples are brought through the central hole in the lucite plug, and their wires are separated. The silk insulation is removed where the wires go under the edge of the glass dome (1 of Figure 1), and each wire is fitted into its own notch in the edge of the glass dome which is then set in Apiezon W wax contained in the groove in the top of the lucite plug. Two standard thermocouples described later and a thermocouple to the bottom of the lower tank are brought into the cryostat through the plug. In addition, 40 copper lead wires are inserted in slots around the periphery of the lucite plug (silk insulation is removed from the lengths of wire in the slots), and the wires and plug sealed with Apiezon W wax into the standard taper glass joint, 3, which is sealed to 5 through a Kovar-Pyrex seal, 4 of Figure 1.

The lucite plug, 25 of Figure 1, accommodates three thermocouples (6 wires in slots around the periphery of the plug) which go to the top and bottom of the upper tank, 12, and to the top of the lower tank, 16. The last two mentioned thermocouples go through the upper tank via a 4.7 mm o.d. monel tube (not shown) which runs through the tank.

The 40 lead wires descending the monel tube, 5, are divided into three bundles of wire; one bundle comprises the shield heater leads, one the resistance thermometer leads, and the last the differential thermocouple leads. There are extra wires in each set. Each bundle of wires is brought into excellent thermal contact with the lower refrigeration tank by making nine turns (54 cm) around one of the 19 mm d. copper posts, 17. The wires are electrically insulated from the posts and are brought into good thermal contact with the latter by the use of G. E. adhesive solution.

The wires are separated after being wound around the copper posts, and each wire is set in a slot on the periphery of the gold-plated copper disk, 18. The wires are held securely in their slots with G. E. adhesive.

A total of 36 lead wires go through the tapered plug and tapered ring of copper in the top of the auxiliary shield (Figure 2). The wires are laid in slots on the periphery of the plug and on the periphery of the ring, and are held securely with G. E. adhesive. Of these 36 wires going to the

---

(4) H. L. Johnston and E. C. Kerr, J. Am. Chem. Soc., 72, 4733 (1950).

UNCLASSIFIED
ORNL-LR-DWG. 4122

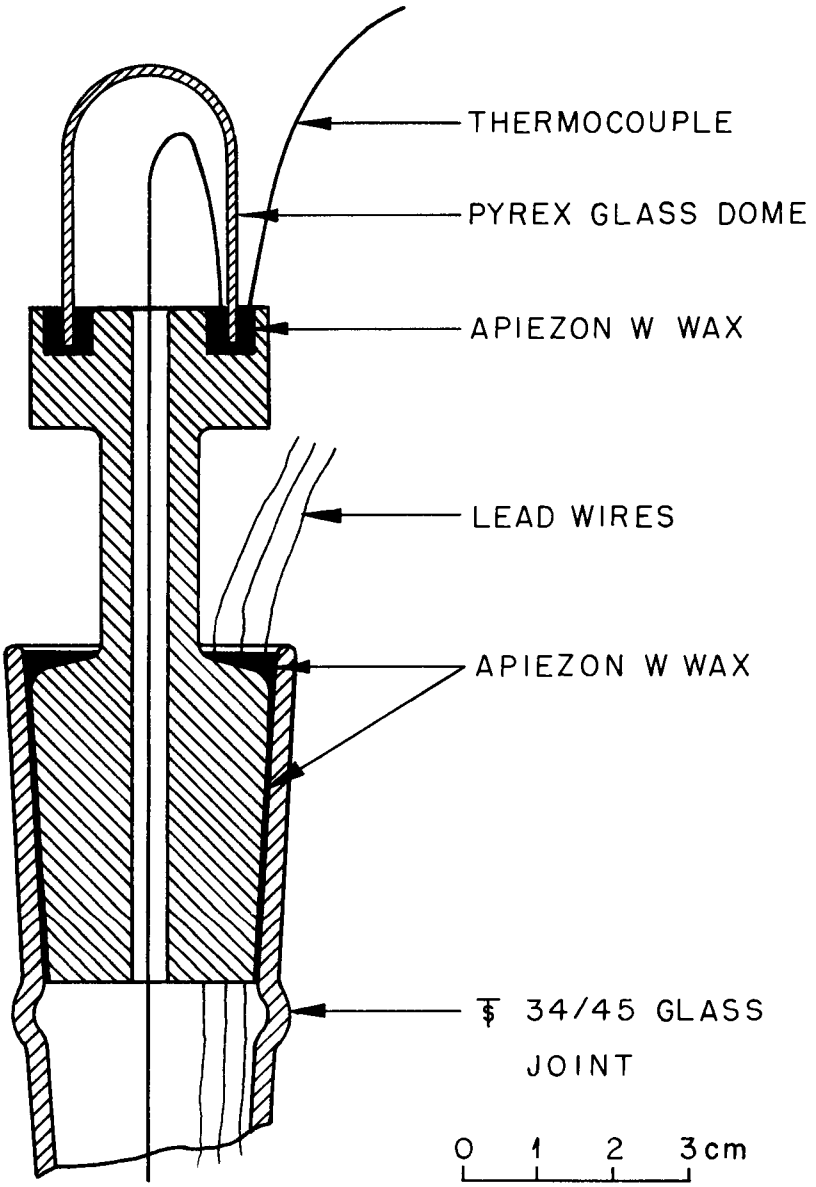

FIGURE 4
LUCITE PLUG FOR BRINGING
LEAD WIRES FROM VACUUM

inside of the auxiliary shield, 20 are brought in thermal contact with the lead wire block, 20 of Figure 1, by winding around it three and a half times (54 cm). These 20 lead wires are brought into good thermal contact with the block by using G. E. adhesive.

The 20 lead wires in thermal contact with the lead wire block are continuous from the block on down to their ultimate destination but are not continuous with the wires coming from the auxiliary shield. The two sets of wires are soldered together approximately one centimeter above the lead wire block.

Of the 20 lead wires coming down from the lead wire block, 13 go into a helical groove on the outside of the adiabatic shield, under the heater winding. This groove is 9.5 mm wide, 0.4 mm deep, and makes one complete loop around the cylindrical portion of the adiabatic shield. The 13 lead wires are brought into good thermal contact with the shield by using a solution of G. E. adhesive. The wires enter the adiabatic shield at the bottom through a slot.

All the shield heaters are bifilarly wound. In each case the enameled manganin heater wire is brought into good thermal contact by the use of a solution of G. E. adhesive. On all the heaters except the lead wire block heater, gold foil (0.1 mil) was placed over the heater to reduce heat exchange by radiation. The heater for the lead wire block is wound upon the inner lead filled portion, 32 of Figure 1. The gauge of heater wire was chosen in each case so that the wire when wound upon the surface to be heated completely covered this surface, giving the most favorable condition for heat transfer. The resistance of the individual heaters is given in Figure 5.

Thermocouples and Differential Thermocouples

Six thermocouples are incorporated in the cryostat: one each to the top and bottom of the lower refrigeration tank and to the top and bottom of the upper refrigeration tank, and two standard thermocouples calibrated *in situ*, one of which goes to the calorimeter and the other to the adiabatic shield.

The two standard thermocouples descend the 25 mm tube separated from the three bundles of lead wires mentioned above and make 15 turns (90 cm) around the copper posts, 17, on the bottom of the lower refrigeration tank, one thermocouple to a post. They are held securely to the copper posts by wrapping with nylon thread, and are painted with a thin film of paraffin. The thermocouples go to the lead wire block through the 2.5 mm d. hole in the auxiliary shield top, which is then filled with paraffin. They make four turns (75 cm) around the lead wire block, and are held in good thermal contact again by use of nylon thread and a thin film of paraffin. They enter the adiabatic shield through the 2.4 mm d. hole in the top and proceed to the bottom of the shield by way of two paraffin-filled, thin-walled, copper tubes soldered to the inside of the adiabatic shield. From here one thermocouple goes to the calorimeter thermocouple well, and the other is soldered to the bottom of the adiabatic shield using Wood's metal.

The standard thermocouples are made of three strands of enameled, single cotton covered, B. and S. No. 30, constantan thermocouple wire (1938 calibration), and one strand of enameled, single silk covered, B. and S. No. 32 copper thermocouple wire, both of which are distributed by the Leeds and Northrup Company. The wires are bound together along their full length with nylon thread, and the whole is impregnated with a solution of equal parts of G. E. adhesive and toluene, and is air dried. These thermocouples each have a resistance of 17 ohms. The other four thermocouples are composed of single strands of copper and constantan treated the same as the standard thermocouples. These thermocouple junctions are soldered to the refrigeration tanks and require no further comment.

The differential thermocouples are all single junction thermocouples. There are differential thermocouples between the following: calorimeter and adiabatic shield, adiabatic shield side and top, adiabatic shield side and bottom, adiabatic shield top and lead wire block, adiabatic shield top and auxiliary shield side, and auxiliary shield side and auxiliary shield top.

The junctions of the differential thermocouple between the calorimeter and the adiabatic shield side are soldered directly to their respective locations. This couple is the most important, and it is very desirable for it to have as rapid a temperature response as possible. The junction on the shield is soldered directly to the inside wall of the shield. The other junction to the calorimeter goes into a well on the side of the calorimeter which will be described later.

The junctions of the remaining differential thermocouples are electrically insulated from their respective locations. These junctions are enclosed in flat sheaths about 3 mm wide and 8 mm long, made of 0.2 mm thick sheet copper. The junctions are insulated from the copper sheaths by strips of mica. The junction, mica strips, and G. E. adhesive were placed into the copper sheath and the copper sheath was crimped tightly onto the mica and junction by use of a large pair of pliers.(5) These copper sheaths are attached to their respective surfaces by use of small nuts and bolts, or by soldering using Wood's metal.

Electrical Circuits

The resistance of the platinum resistance thermometer described later is measured by comparing the potential drop across the thermometer with that across a Leeds and Northrup, NBS certified, standard resistor, using a constant measuring current of two milliamperes. Below a resistance of 5 ohms (approximately 80°K), comparison is made with a one ohm standard resistor using a White 10,000 microvolt single potentiometer for the potential measurement. Above 5 ohms resistance comparison is made with a 10 ohm standard resistor using a White 100,000 microvolt double potentiometer. The circuit is a standard one possessing a QPDT reversing switch, and is described

---

(5) The copper sheaths are similar to those of R. B. Scott, C. H. Meyers, R. D. Rands, Jr., F. G. Brickwedde, and N. Bekkedahl, J. Res. NBS, 35, 39-85 (1945).

no further except to state that the circuit is a permanent feature of the general wiring of the cryostat, making it possible to use the platinum resistance thermometer exclusively in place of the standard thermocouple and non-strain-free resistance thermometer arrangement described presently.

The galvanometer for use with the 10,000 microvolt potentiometer is a Leeds and Northrup HS type galvanometer with a resistance of 13.5 ohms, a CDRX of 17 ohms, and a sensitivity of 0.09 microvolts/mm at one meter. The one for use with the 100,000 microvolt potentiometer is a Leeds and Northrup type R galvanometer with a resistance of 33.5 ohms, a CDRX of 350 ohms, and a sensitivity of 0.0038 microamperes/mm at one meter. Galvanometer movement is observed with an illuminated scale and telescope arrangement, the scale being located 6.5 meters from the galvanometer.

The electromotive force of a differential thermocouple is observed on either of two Leeds and Northrup HS type galvanometers with working sensitivities of 0.05 microvolts/mm or 0.02 microvolts/mm, using a lamp and scale arrangement (2 meter and 5 meter optical paths, respectively). The leads from the differential thermocouples reach the galvanometers by way of a Leeds and Northrup type 31-3 selector switch and galvanometer switch. In the case of the differential thermocouple between the auxiliary shield and the adiabatic shield there is interposed a potential divider capable of counter balancing the electromotive force of the thermocouple, since, in most cases, the auxiliary shield is operated colder than the adiabatic shield. The potential divider has steps from 0 to 10 microvolts and a miltiplier switch with factors 0.1X, 1X, 10X, and 100X.

The circuit for controlling the energy to the shields is given in Figure 5. The Variac, V, and the rheostat, R_3, adjust to give the correct current to the heater, while the switch, S_2, when closed makes possible a momentary increase in current without necessity of altering the settings of the Variac and the rheostat. The shield heater circuit is supplied with 110 V. AC through a Sola transformer in order that no "earthed" lead wire goes into the cryostat. The two rheostats, A and B, in the adiabatic shield portion of the circuit permit adjustment of the currents through the top, side, and bottom heaters to give the correct rate of temperature rise. Only minor adjustments of these two rheostats are required during a course of measurements over the whole temperature range.

Figure 6 gives the circuit diagram of the combination resistance thermometer-heater. Temperature measurements are made with the QPDT switch in the "up-position," and energy measurements when in the "down-position." The working batteries for the resistance thermometer are 15 telephone cells (Dry cell-No. 6). They are under constant discharge through 70,000 ohms, 80,000 ohms, and 100,000 ohms in parallel. The three SPDT switches are always in the "up" or "down-position"; when "down" the current flowing through the resistance in series with the switch likewise flows through the resistance thermometer. This arrangement makes it possible to change the thermometer current without appreciably altering the current continuously being withdrawn from the batteries. The thermometer current is measured by observing the potential drop (I_R) across a 100 ohm standard resistor with the 100,000 microvolt White potentiometer, and the potential drop across the thermometer (E_R) is observed directly.

UNCLASSIFIED
ORNL-LR-DWG. 4409

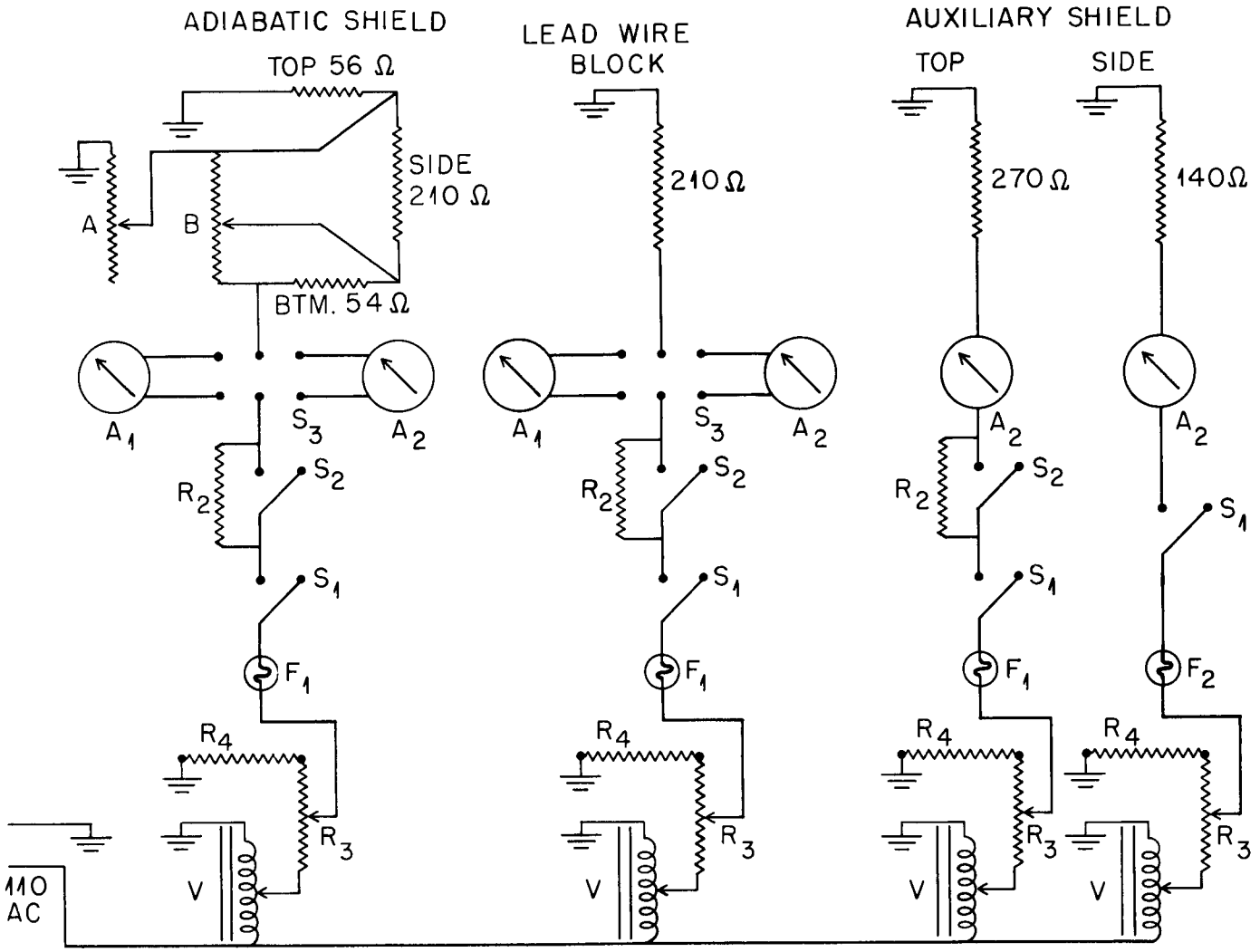

A_1 = 100 ma ammeter
A_2 = 500 ma ammeter
A and B = 3000 Ω - 4 watt rheostat
R_2 = 100 Ω - 25 watt resistor
R_3 = 150 Ω - 50 watt rheostat
R_4 = 300 Ω - 50 watt resistor

F_1 = 0.25 a fuse
F_2 = 0.5 a fuse
V = 1a variac
S_1 and S_2 = spst switch
S_3 = dpdt switch

FIGURE 5
SHIELD HEATER CONTROL CIRCUIT

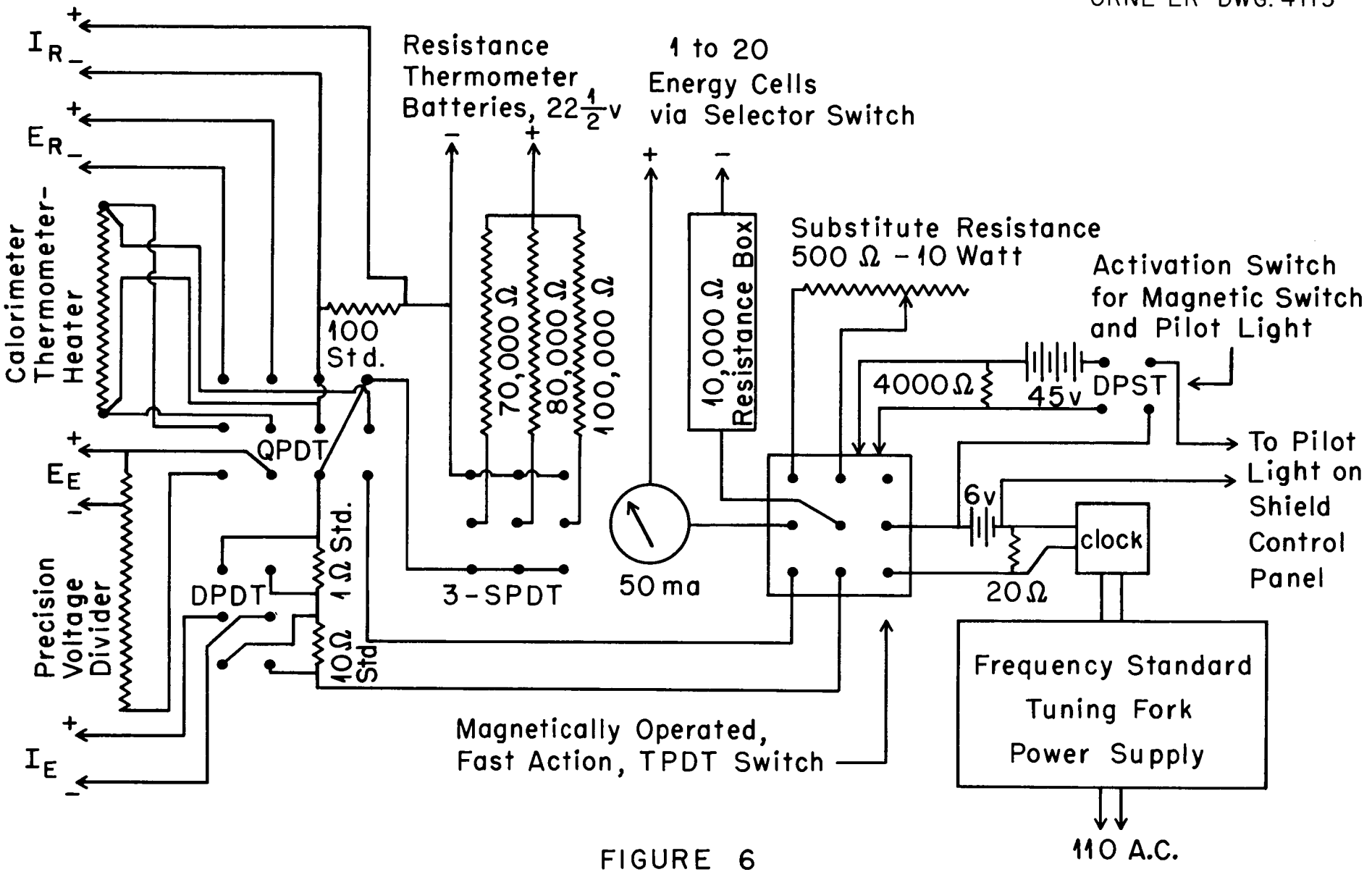

FIGURE 6
RESISTANCE THERMOMETER - HEATER CIRCUIT

The energy cells are Willard Low Discharge lead storage cells (Type DA-2-1). During the course of measurements, the cells are on constant discharge through the calorimeter heater or the substitute resistance. The latter is altered after each measurement to make its resistance equal to that of the calorimeter resistance thermometer-heater. For low energy input, many energy cells are used in series with a large resistance. A fast action, magnetically operated, TPDT switch activates the energy cells and clock. This switch requires 45 volts DC to operate, and is itself activated by the DPST switch. The 4000 ohms in parallel with the switch reduces sparking at the DPST switch. The magnetic switch operates the 6 volt DC clutch of the clock. The clock movement is operated by a 60 V. P. S. tuning fork power supply(6) which produces a 10 watt, 60 cycle current. The frequency is constant to within $\pm$ 0.001% at 20°C and possesses a temperature coefficient of 1×10^{-6}/°C.

The energy current is measured by observing the potential drop across a 1 ohm or 10 ohm standard resistor (I_E) using the 100,000 microvolt White potentiometer. The voltage to the heater is observed (E_E) by utilizing a precision voltage divider of 30,000 ohms with a 150 ohm, a 300 ohm, and a 450 ohm tap. An appropriate correction is applied for the energy dissipated in the voltage divider.

Calibration of the Standard Thermocouples

In keeping with the over-all guiding principle of flexibility in the design of the low temperature calorimeter, two thermocouples calibrated *in situ* have been incorporated in the apparatus. These thermocouples permit the use of a non-strain-free resistance thermometer-heater. Other advantages of having these calibrated thermocouples arise when a semi-microcalorimeter is used. These advantages will be discussed in a later report describing the semi-microcalorimeter.

The construction of the thermocouples has been given above. The constantan wires used were subjected to the inhomogeneity test described by Giauque(7) and co-workers. The average deflection observed was $\pm$ 0.7 microvolt and the maximum deflection observed was 2.1 microvolts.

The standard thermocouples were calibrated by direct comparison with a Leeds and Northrup 25 ohm capsule type platinum resistance thermometer which had been calibrated at the National Bureau of Standards. The platinum resistance thermometer was calibrated at the Bureau over the temperature range 10° to 90°K by direct comparison with a standard platinum thermometer at 18 different temperatures using a measuring current of 2 milliamperes. The results of this calibration were furnished in the form of a smooth resistance versus temperature (°K) table which is continuous with the calibration at higher temperatures when the point of joining is taken to be 90.19°K = -182.97°C (International Temperature Scale). The calibration above 90°K was

---

(6) Manufactured by Riverbank Laboratories, Geneva, Illinois.
(7) W. F. Giauque, R. M. Buffington, and W. Schulze, J. Am. Chem. Soc., 49, 2343 (1927).

made at the Bureau in the standard manner by obtaining the resistance (using a 2 milliampere measuring current) at the ice point, steam point, sulfur point, and oxygen point according to the recommended procedures for calibrations on the International Temperature Scale. The results of this calibration were furnished in the form of four constants for the Callendar equation.(8)

Figure 7 shows the calibration block used to inter-compare the thermocouples and the platinum resistance thermometer. It is a cylinder made of copper and lead with a re-entrant well for the resistance thermometer and two thermocouple wells. It contains 1.6 moles (332 g) of lead (to increase its heat capacity at low temperature) and 2.7 moles (171 g) of copper. The heater for the block is B. and S. No. 40, heavy formvar coated copper wire wound on the cylindrical sides (565 turns) and further insulated from the latter by the use of lens paper and a solution of G. E. adhesive. The heater was covered with gold foil (0.1 mil thick) to reduce heat loss by radiation. The B. and S. No. 40 copper wire was used as the heater wire because it was desired to obtain resistance-temperature data for this wire. The wire from which the heater was obtained is reserved for use as lead wire between the calorimeter and the adiabatic shield. Corrections for the calorimeter heater lead wires connected in the manner described later require a knowledge of both the resistance per unit length of the lead wire and its temperature coefficient as a function of the temperature.

The differential thermocouple junction on the calibration block was made by placing a 5 mil sheet of copper, 2 cm by 5 cm, beneath the heater windings with a 5 mm wide extension from under the windings to which the differential thermocouple was soldered. The location of the differential thermocouple on the block was of little importance in this case since measurements were carried out during equilibrium periods. A much superior method of attaching the differential thermocouple will be given when the calorimeter proper is described below.

The calibration procedure was simple: the calibration block was heated to a predetermined temperature, then the adiabatic shield and the auxiliary shield were heated to and maintained at this same temperature. The calibration block showed no temperature drift except at the lowest temperatures, where a small negative drift was observed. During this equilibrium period the "normal" and "reverse" resistance of the platinum resistance thermometer were measured and concurrently the electromotive forces of the two thermocouples were observed. In the temperature range 14° to 90°K, a total of 22 calibration points were obtained, and in the range 90° to 325°K, a total of 47 calibration points.

These data were used to construct a difference table of observed minus calculated electromotive forces at appropriate intervals of the observed thermocouple electromotive force. A cubic equation in t°C was employed to obtain the calculated electromotive forces. This table in conjunction with

---

(8) See H. F. Stimson, J. Res. of Natl. Bur. Stands., 42, 209 (1949), for the definition of the International Temperature Scale of 1948. This paper also presents data on intercomparison of the thermodynamic scale and the International Temperature Scale.

UNCLASSIFIED
ORNL-LR-DWG. 4118

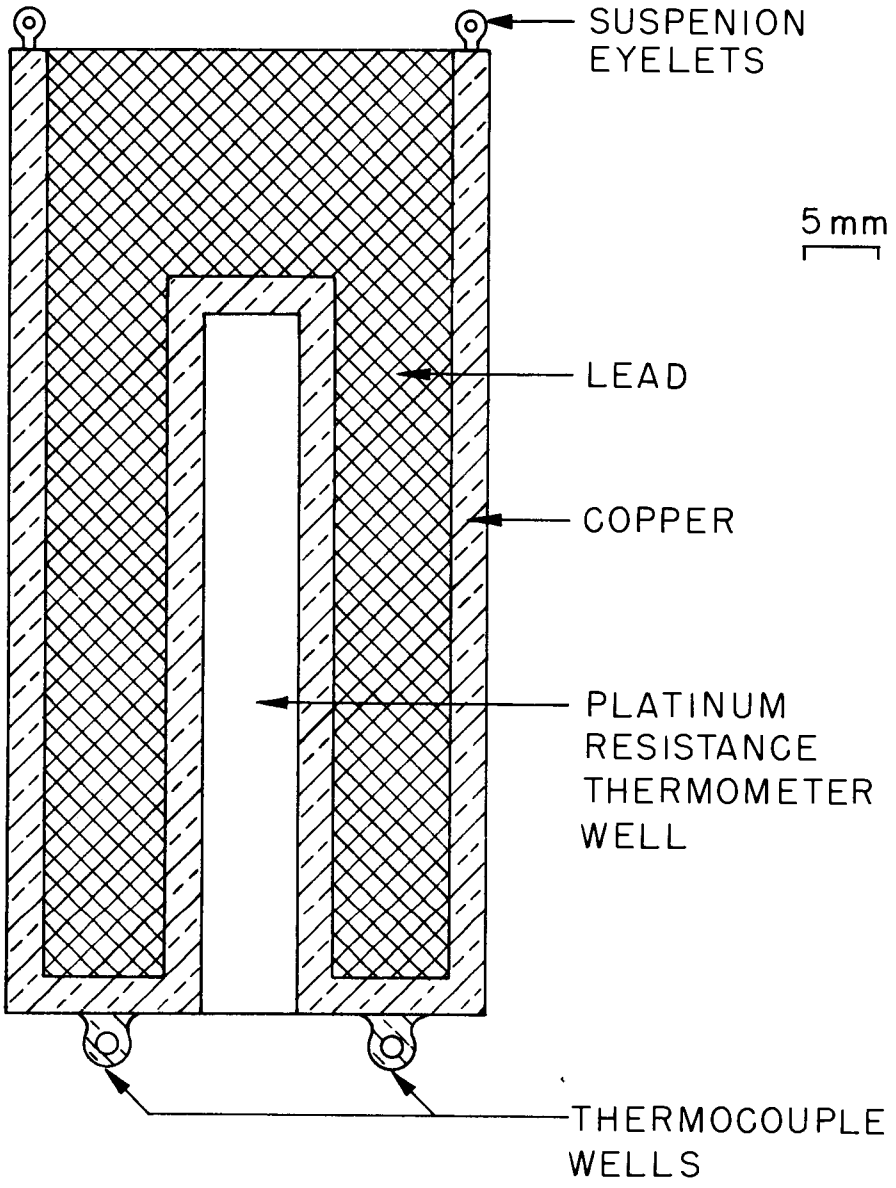

FIGURE 7

THERMOCOUPLE CALIBRATION BLOCK

a temperature-electromotive force (calculated) table permits the calculation of the temperature from an observed thermocouple reading.

It is believed that the temperature scale thus established with the thermocouples agrees with the thermodynamic scale within 0.05°K. It is anticipated that frequent checks on the lowest temperature calibration will be made by condensing hydrogen inside the lower tank radiation shield and making a direct observation of the electromotive force of the thermocouples at the boiling and triple points of hydrogen.

Testing the Operation of the Calorimeter

The heat capacity of a sample of Calorimetry Conference Standard benzoic acid[9] has been measured over the temperature range 14°-300°K to test the performance of the calorimeter. The heat capacity of the sample has been determined both by the adiabatic and isothermal methods. In addition to demonstrating the performance of the calorimeter, these data may also be of importance because they add to the knowledge being accumulated[9b] on the Calorimetry Conference Standard Samples.

The copper calorimeter shown in Figure 8 was utilized for these measurements. The top and bottom were spun from 20 mil sheet copper and silver soldered to the 20 mil wall copper tubing. A thermocouple well is provided on the bottom and the filling tube at the top is a 6.5 mm o.d. stainless steel tube. The calorimeter is 82.5 mm in over-all height, is 31.8 mm in diameter, and has a volume of 50.6 ml. Ten radial vanes of 5 mil copper, soldered at the center and along their whole length to the inside of the calorimeter, provide good heat transfer within the calorimeter. The filling tube is closed by soldering the small copper cap over the end of the tube. A small hole in the cap allows introduction of helium and is readily closed by solder. Three small eye hooks on the top of the calorimeter provide means of suspension from the top of the adiabatic shield.

A combination resistance thermometer-heater was wound on the calorimeter as follows: the cylindrical portion of the calorimeter wall was coated with a solution of G. E. adhesive and lens paper, then air dried. The resistance thermometer-heater made from B. and S. No. 40 (gold + 0.15% silver added) enameled wire was then wound on the calorimeter covering the whole cylindrical side of the calorimeter. A total of 750 turns were wound giving the thermometer a resistance of 420 ohms at room temperature. Several coats of G. E. adhesive solution were applied to hold the wire securely to the calorimeter wall. The calorimeter was finally dried in an oven at 125°C for an hour.

(9a) G. T. Furukawa, R. E. McCoskey, and G. J. King, J. Res. of NBS, 47, 256 (1951).
(9b) P. C. Ginnings and G. T. Furukawa, J. Am. Chem. Soc., 75, 522 (1953).
(9c) D. R. Stull, Chem. Eng. News, 27, 2772 (1949).

These papers also give a brief discussion of the function of the Calorimetry Conference Standard Samples.

UNCLASSIFIED
ORNL-LR-DWG. 4117

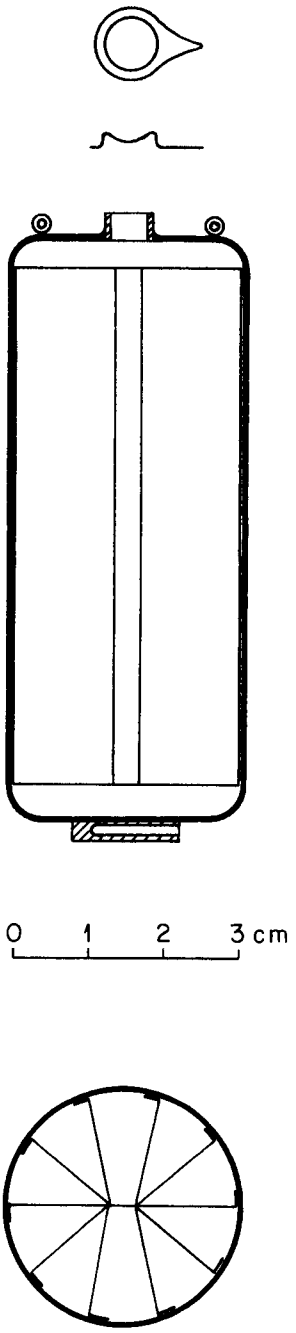

FIGURE 8

COPPER
CALORIMETER
NO. 1

The differential thermocouple well was constructed as follows: a 2 mil copper sheath was sealed with G. E. adhesive around the calorimeter, completely covering the resistance thermometer. The over-lapping edges were tinned, making it possible to solder the sheath firmly over the resistance thermometer. In the middle of one of these edges, a 7 mm wide ribbon was provided when the sheath was cut. This ribbon was tinned and rolled up to form a well for the differential thermocouple. This copper sheath was then covered with gold-foil to reduce heat leak by radiation. After air drying overnight the calorimeter was placed in an oven at 125°C for one hour.

The weight of the calorimeter with cap and support threads is 58.8 g.

The heat capacity of the empty calorimeter, filled to one atmosphere of pressure of helium to facilitate heat transfer, was measured adiabatically over the temperature range 14° to 310°K, and isothermally over the range 60° to 310°K.(10) When measurements are made by the adiabatic method, one operator observes the electromotive forces of the differential thermocouples and adjusts the currents to the adiabatic shield and lead wire block to maintain adiabatic conditions. The shield is maintained within ± 0.002° of the calorimeter except at the start and end of an energy input where the temperature difference may become 0.05° to 0.10° for a few seconds. The lead wire block is held to within 0.01°-0.02° of the adiabatic shield, its temperature control not being very critical. Every few runs the auxiliary shield is heated to a temperature a few degrees below that of the adiabatic shield. A second operator observes the temperature of the calorimeter for 8 to 10 minutes to ascertain if any drift is present, makes appropriate measurements during an energy input period of 5 to 10 minutes, and then again observes the temperature for 8 to 10 minutes. The standard thermocouple is also observed during this period to obtain calibration data for the resistance thermometer. Approximately three adiabatic determinations can be made in an hour by two operators.

No detectable temperature drift was observed above about 35°K during the "before" and "after" energy periods when equilibrium was established. Below this temperature a small negative drift occurred, reaching a maximum of 0.0006° per minute at 14° for the empty calorimeter. The calorimeter reached equilibrium within 3 to 5 minutes after energy input.

---

(10) The heat capacity of the empty calorimeter is dependent upon whether it is measured adiabatically or isothermally. This arises from the fact that the lengths of the wire or the thread that traverse the vacuum space between the calorimeter and the shield (i.e., the heater lead wires, differential and standard thermocouples, and the support threads) undergo a smaller temperature rise during the course of an isothermal measurement than during the course of an adiabatic measurement. These wires experience a smaller temperature rise because they always assume a temperature mid-way between that of the calorimeter and shield during an isothermal measurement. At 80°K the isothermal heat capacity is 0.07% lower than the adiabatic, the difference increasing regularly until at 300°K the isothermal is 1.35% lower than the adiabatic heat capacity.

When the measurements are carried out by the isothermal method, only one operator is required. In this case the operator heats the adiabatic shield and lead wire block to a temperature approximately midway between the initial and final temperatures that the calorimeter will attain during the course of the measurement. The auxiliary shield is then heated to a temperature one to two degrees below that of the adiabatic shield. By observing the standard thermocouple soldered to the bottom of the adiabatic shield, and adjusting a small amount of energy to the shield, the temperature of the latter is readily held constant to less than .01° with very little attention during the course of an isothermal measurement. After the shields have been adjusted, the operator observes the temperature drift of the calorimeter for 10 to 12 minutes, puts a measured amount of energy into the calorimeter, and then again observes the temperature drift of the calorimeter. The shields are then heated and adjusted again and the process repeated. An isothermal determination takes one operator approximately one hour.

The same measurements were made on the calorimeter filled with the benzoic acid. The weight of the benzoic acid used was 37.763 g (in vacuo) which represents 0.30921 mole of acid using 122.125 as the molecular weight of the acid. The calorimeter was again sealed with one atmosphere pressure of helium to insure rapid thermal equilibrium.

The method of calculation of the isothermal data and the procedure for treating the calibration data of the resistance thermometer (obtained concurrently with the heat capacity measurements) followed that of Giauque[11] and co-workers. Appropriate corrections for the change in the weight of the solder and helium in the empty and full calorimeter were made.

The two potential leads and the two current leads (at the bottom of the adiabatic shield) servicing the resistance thermometer-heater are soldered to two 3 cm lengths of B. and S. No. 18 enameled copper wires which are tinned on each end and are thermally anchored to the bottom of the adiabatic shield. From each of these two wires a 3 cm length of the calibrated B. and S. No. 40 copper lead wire goes to the lead wire terminals on the calorimeter. An appropriate correction for the heat generated in these leads was applied. An additional correction was applied in the case of the isothermal determinations to the resistance thermometer readings arising because these two lead wires assume temperatures midway between the calorimeter and the shield.[11]

The calculation of the adiabatic determinations is similar to that for the isothermal determinations with the considerable difference that no corrections for heat loss are necessary (nor are they possible to make).

The heat capacity data for benzoic acid determined adiabatically and isothermally are given in Table I and Table II, respectively. One defined calorie was taken to be equal to 4.180 absolute joules. The ice point is taken as 273.16°K. The heat capacity of the empty calorimeter represented 17% of the total heat capacity of the full calorimeter at 20°K, 33% at 50°,

---

(11a) G. E. Gibson and W. F. Giauque, J. Am. Chem. Soc., 45, 93 (1923).
(11b) W. F. Giauque and R. Wiebe, J. Am. Chem. Soc., 50, 101 (1928).
(11c) W. F. Giauque and H. L. Johnston, J. Am. Chem. Soc., 51, 2300 (1929).

Table I

Molal Heat Capacity of Benzoic Acid

M.W. = 122.125 0°C = 273.16°K

Adiabatic Determinations

T (°K)	C_p (Cal/deg-mole)	T (°K)	C_p (Cal/deg-mole)	T (°K)	C_p (Cal/deg-mole)
15.57	1.594	76.59	12.98	189.61	23.55
17.91	2.115	82.42	13.60	197.27	24.31
20.20	2.652	88.34	14.19	204.99	25.09
22.13	3.202	94.15	14.74	212.71	25.86
24.96	3.962	100.03	15.26	220.45	26.66
27.87	4.722	106.06	15.81	228.24	27.47
30.74	5.449	112.57	16.40	236.10	28.29
33.53	6.112	120.04	17.10	244.01	29.14
36.41	6.740	126.94	17.71	251.97	30.00
39.66	7.480	132.93	18.26	259.92	30.86
43.53	8.292	139.20	18.83	261.78	31.05
47.79	9.065	145.84	19.44	270.10	32.00
52.14	9.818	152.90	20.08	278.49	32.90
56.95	10.54	160.19	20.75	286.89	33.82
62.22	11.27	167.47	21.44	295.34	34.78
67.74	11.95	174.62	22.11	303.77	35.77
73.29	12.62	182.09	22.82		

Table II

Molal Heat Capacity of Benzoic Acid

M.W. = 122.125 0°C = 273.16°K

Isothermal Determinations

T (°K)	C_p (Cal/deg-mole)	T (°K)	C_p (Cal/deg-mole)	T (°K)	C_p (Cal/deg-mole)
68.46	12.04	140.29	18.92	230.33	27.67
73.88	12.68	147.14	19.55	238.25	28.54
77.76	13.11	154.00	20.20	245.68	29.32
83.81	13.74	161.39	20.88	253.25	30.12
89.68	14.32	168.90	21.59	260.81	30.95
95.50	14.86	176.70	22.32	268.59	31.85
101.43	15.38	183.89	23.01	272.55	32.27
107.75	15.96	191.26	23.73	280.51	33.20
114.00	16.54	198.74	24.52	288.74	34.16
120.43	17.11	206.28	25.22	300.12	35.46
127.13	17.73	213.95	25.96		
133.74	18.33	222.94	26.94		

42% at 100°, 38% at 200°, and 33% at 300°K. The measurements were continuous in that the temperature of the calorimeter never changed overnight by more than a few degrees. The energy to the shields is readily adjusted to keep the calorimeter at almost constant temperature overnight.

A comparison between this research and the results obtained at the National Bureau of Standards[9a] is shown graphically in Figure 9. This is a graph of the deviation between individual experimental points of this research and a smooth curve obtained by a plot of the NBS smoothed, tabulated heat capacities.[12]

A few comments on the data given in Figure 9 are of interest: First, it is emphasized that the plot is a deviation plot between the results of this research and the NBS smoothed curve, and is not a deviation plot between the experimental points of this research and a smooth curve through these points. The latter curve could be drawn to give a more flattering deviation plot.

The data also give an opportunity to evaluate the accuracy of the sets of heat capacity measurements. The National Bureau of Standards investigators[9a] give the following estimates for the accuracy of their data, these estimates being reached by examining contributions to the inaccuracy from all known sources: ± 0.2% from 60°K to 395°K, and below 60° the error increasing to ± 1% at 14°K. By reference to Figure 9, these estimations appear to be fairly well justified, the agreement between the two sets of data being better than 0.1% on the average above 60°K, and decreasing to approximately ± 1% at 17°K. The high value at 15°K probably arises from an error in the temperature scale since the first calibration point on the standard thermocouples was at 14°K.

A final point of interest in connection with the data presented in Figure 9 relates to the comparison between the isothermally determined and adiabatically determined heat capacities. This comparison of these two techniques of measuring low temperature heat capacities is unique in that the method of measurement is the only difference between the two sets of data. The apparatus was not disturbed between the two series of measurements with the exception of cooling and warming of the apparatus. A close examination of the two curves shows very good agreement between the two techniques. From 200°K up the isothermal determinations show more spread than the adiabatic determinations. This is probably due in part to a small amount of water unknowingly trapped in the cryostat at low temperatures which was evolved as vapor above 200°K. The Newton cooling constant, Figure 10, calculated from this particular series of isothermal measurements, shows more deviation from a smooth curve than that usually obtained from this apparatus. Both sets of data are higher than the NBS curve above 300°K.

---

(12) The smoothed values for the heat capacity of benzoic acid given by NBS investigators[9a] at 75°, 85°, and 90°K are obviously not smooth; the values given being 0.14% low, 0.20% high, and 0.13% high, respectively. These corrections were applied to the curve before obtaining points for Figure 9.

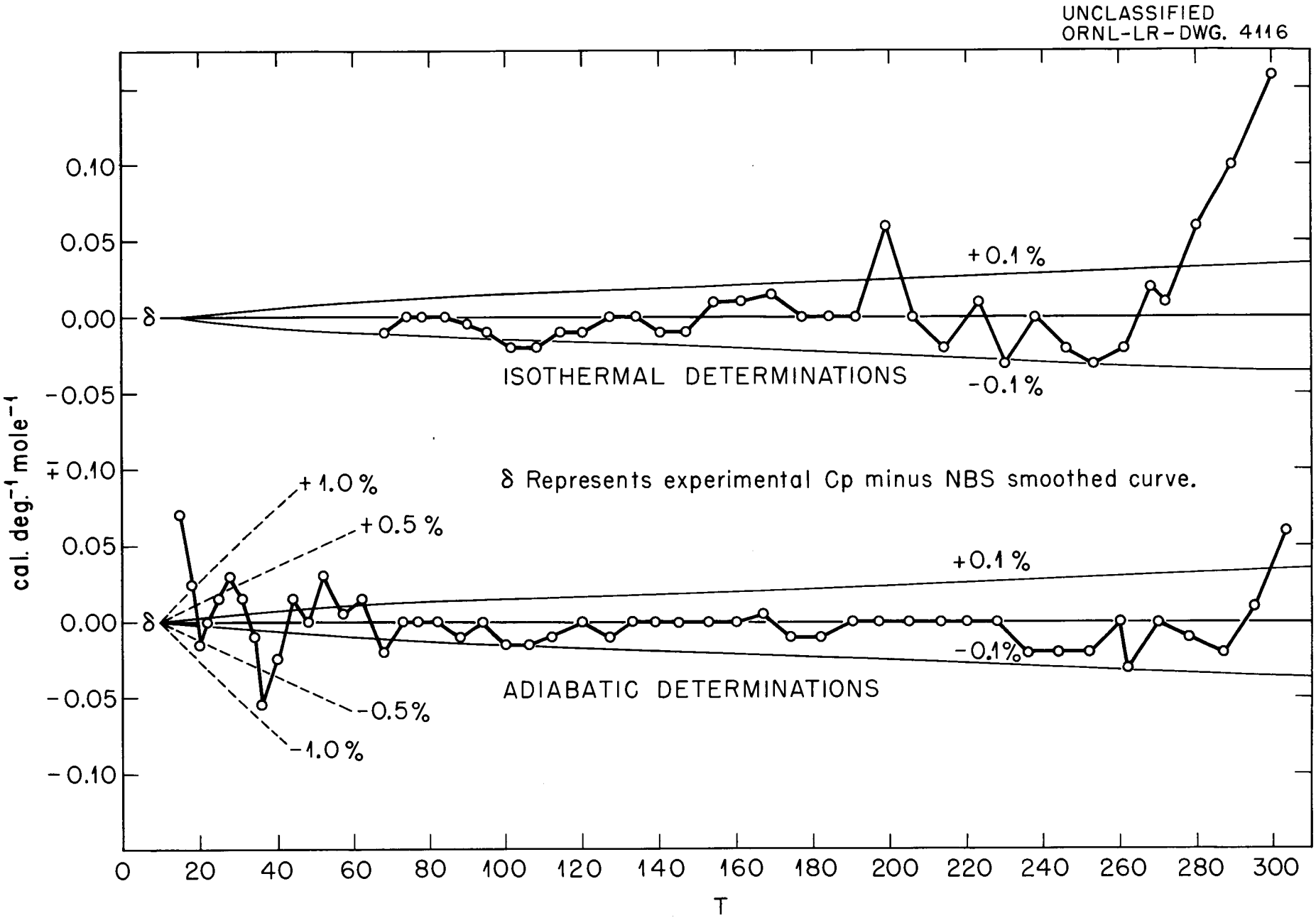

FIGURE 9
COMPARISON BETWEEN THIS RESEARCH AND NATIONAL BUREAU OF STANDARDS

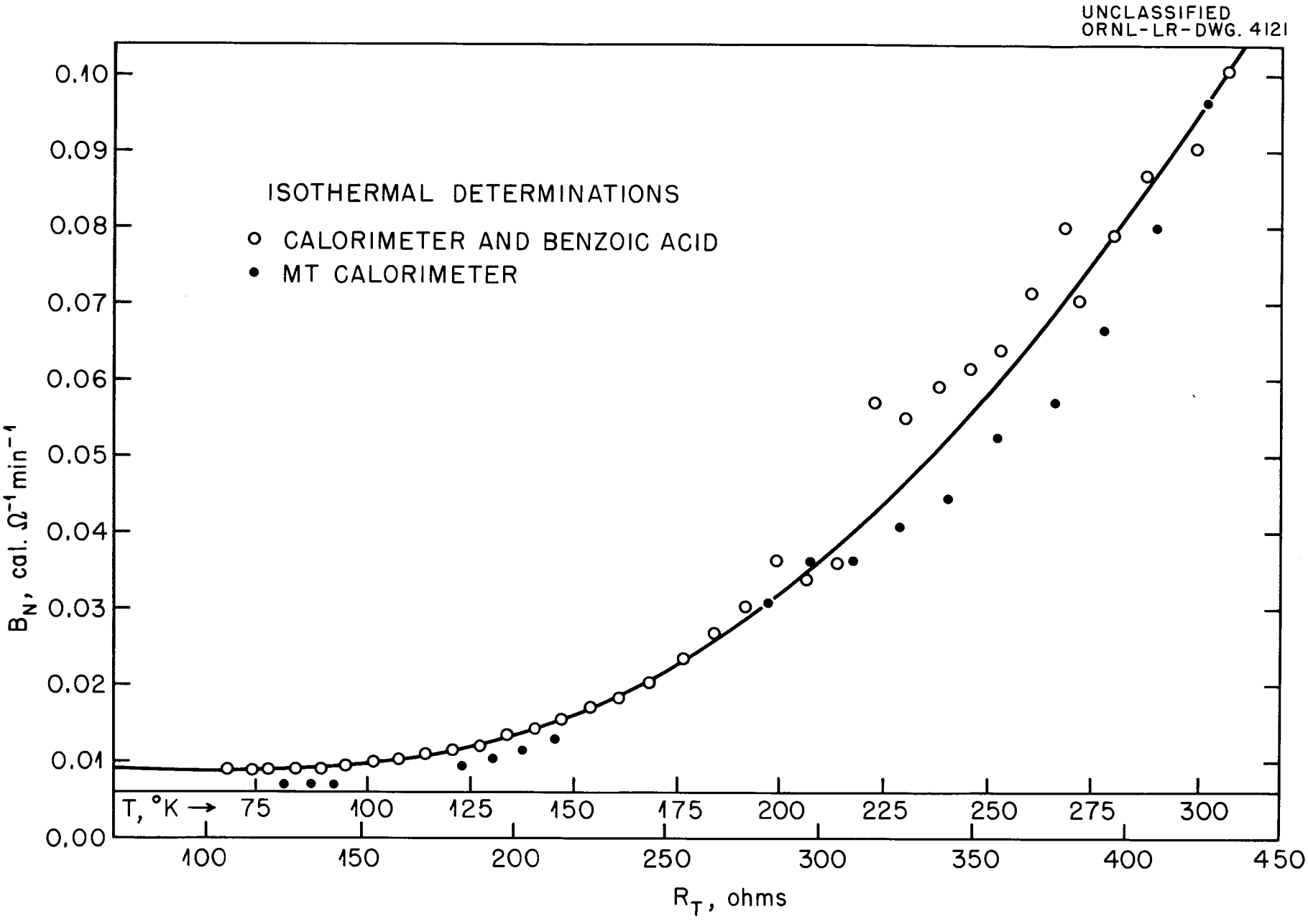

FIGURE 10
NEWTON COOLING CONSTANT

N. Feodosiev[13] has directly compared the isothermal and adiabatic methods for measuring low temperature heat capacities by measuring the heat capacity of potassium chloride over the temperature range 85° to 290°K. He obtains isothermal results that are higher than the adiabatic determinations by 0.2% at 85°K and 2% at room temperature. Feodosiev ascribes this deviation in part to the fact that the potassium chloride sample is a poor thermal conductor and that this poor thermal conductivity detrimentally affects the isothermal more than the adiabatic determinations. He also concludes that the isothermal method is more susceptible than the adiabatic to the quality of the vacuum between the calorimeter and its surroundings.

The results on benzoic acid presented in this report do not agree with these conclusions. A critical analysis of Feodosiev's apparatus and results is not possible in the limited space of this report, It is the opinion of this author, however, that the locations of the heater and resistance thermometer on Feodosiev's calorimeter do not permit the accurate estimation of corrections necessary in the calculation of precise isothermal measurements. In our work the correction for superheating in the heater wound on the outside surface of the calorimeter used for benzoic acid amounted to approximately 0.5% for the full calorimeter and to 1% for the empty calorimeter at room temperature; the correction decreased to a few hundredths of a percent in both cases at 80°K. Because of the manner in which Feodosiev's heater was wound on his calorimeter (it covered only the bottom of his calorimeter), the above correction must have been considerably larger; yet it is not possible from his measurements to make this correction. His adiabatic determinations were subject to the same type error, but reduced in magnitude.

Acknowledgment

The author wishes to express his thanks to Dr. G. E. Myers who assisted in the experimental measurements.

---

(13) N. Feodosiev, J. Phys. Chem. (U.S.S.R.), 12, 291-307 (1938).