[redacted]

MARTIN MARIETTA ENERGY SYSTEMS LIBRARIES
3 4456 0360736 3

CENTRAL RESEARCH LIBRARY
DOCUMENT COLLECTION

AEC RESEARCH AND DEVELOPMENT REPORT

ORNL-1829
Progress

DECLASSIFIED
CLASSIFICATION CHANGED TO:
BY AUTHORITY OF: E. J. Murphy 6-30-60
BY: N. Douglas 8/16/60

STABLE ISOTOPE RESEARCH AND PRODUCTION DIVISION SEMIANNUAL PROGRESS REPORT FOR PERIOD ENDING NOVEMBER 20, 1954

CENTRAL RESEARCH LIBRARY
DOCUMENT COLLECTION
LIBRARY LOAN COPY
DO NOT TRANSFER TO ANOTHER PERSON
If you wish someone else to see this document, send in name with document and the library will arrange a loan.

OAK RIDGE NATIONAL LABORATORY
OPERATED BY
CARBIDE AND CARBON CHEMICALS COMPANY
A DIVISION OF UNION CARBIDE AND CARBON CORPORATION
UCC
POST OFFICE BOX P
OAK RIDGE, TENNESSEE

RESTRICTED DATA
[redacted]
[redacted]

[redacted]

ORNL-1829
This document consists of 67 pages.
Copy 5 of 105 copies. Series A.

Contract No. W-7405-eng-26

STABLE ISOTOPE RESEARCH AND PRODUCTION DIVISION SEMIANNUAL PROGRESS REPORT

For Period Ending November 20, 1954

C. P. Keim, Director

DATE ISSUED

FEB 3 1955

OAK RIDGE NATIONAL LABORATORY
Operated by
CARBIDE AND CARBON CHEMICALS COMPANY
A Division of Union Carbide and Carbon Corporation
Post Office Box P
Oak Ridge, Tennessee

[redacted]

LIBRARIES
3 4456 0360736 3

[redacted]

INTERNAL DISTRIBUTION

1. C. E. Center
2. Biology Library
3. Health Physics and Metallurgy Library
4-6. Central Research Library
7. Reactor Experimental Engineering Library
8-12. Laboratory Records Department
13. Laboratory Records, ORNL R.C.
14. C. E. Larson
15. L. B. Emlet (K-25)
16. J. P. Murray (Y-12)
17. A. M. Weinberg
18. E. H. Taylor
19. E. D. Shipley
20. W. H. Jordan
21. F. C. VonderLage
22. J. A. Swartout
23. S. C. Lind
24. F. L. Culler
25. A. H. Snell
26. A. Hollaender
27. M. T. Kelley
28. G. H. Clewett
29. K. Z. Morgan
30. T. A. Lincoln
31. A. S. Householder
32. C. S. Harrill
33. C. E. Winters
34. D. W. Cardwell
35. E. M. King
36. D. D. Cowen
37. P. M. Reyling
38. C. P. Keim
39. S. Cromer
40. J. M. Herndon
41. R. S. Livingston
42. F. W. Hurd
43. C. E. Normand
44. J. R. McNally, Jr.
45. C. R. Baldock
46. Boyd Weaver
47. G. C. Williams
48. R. W. Johnson
49. E. J. Murphy
50. P. S. Baker
51. M. J. Skinner
52. A. F. Rupp
53. J. L. Gabbard
54. R. A. Charpie
55. G. E. Boyd
56. ORNL Document Reference Library, Y-12 Branch

EXTERNAL DISTRIBUTION

57-62. Argonne National Laboratory
63-64. Atomic Energy Commission, Washington
65-67. Brookhaven National Laboratory
68-69. Carbide and Carbon Chemicals Company (K-25 Plant)
70. Chicago Patent Group
71. Chief of Naval Research
72-74. duPont Company, Augusta
75. General Electric Company, Richland
76. Hanford Operations Office
77. Iowa State College
78-79. Knolls Atomic Power Laboratory
80. Los Alamos Scientific Laboratory
81. Naval Research Laboratory
82-83. New York Operations Office
84. Patent Branch, Washington
85. Savannah River Operations Office, Augusta

[redacted]

[redacted]

~~86. DuPont Company, Wilmington~~
~~87-89. University of California Radiation Laboratory, Berkeley~~
~~90-104. Technical Information Service, Oak Ridge~~
~~105. Division of Research and Medicine, AEC, ORO~~

[redacted]

[redacted]

Reports previously issued in this series are as follows:

Y-497	July 1, 1949 to September 30, 1949
Y-550	October 1, 1949 to December 31, 1949
Y-586	January 1, 1950 to March 31, 1950
Y-636	April 1, 1950 to June 30, 1950
Y-685	July 1, 1950 to September 30, 1950
Y-723	October 1, 1950 to December 31, 1950
Y-765	January 1, 1951 to March 31, 1951
Y-797	April 1, 1951 to June 30, 1951
Y-821	July 1, 1951 to September 30, 1951
ORNL-1228	October 1, 1951 to December 31, 1951
ORNL-1298	January 1, 1952 to March 31, 1952
ORNL-1356	April 1, 1952 to June 30, 1952
ORNL-1434	July 1, 1952 to September 30, 1952
ORNL-1483	Period Ending December 31, 1952
ORNL-1563	Period Ending May 20, 1953
ORNL-1617	Period Ending November 20, 1953
ORNL-1732	Period Ending May 20, 1954

[redacted]

[redacted]

CONTENTS

PUBLICATIONS vii

MEETINGS AT WHICH PAPERS WERE PRESENTED vii

OTHER MEETINGS ATTENDED BY MEMBERS OF THE DIVISION viii

TRAVELING LECTURE viii

PAPERS CONCERNING USAGE OF ENRICHED ISOTOPES viii

SPECTROSCOPY RESEARCH LABORATORY 1
- Introduction 1
- Nuclear Resonance 1
  - Project NR-1 – table of nuclear moment data 1
  - Project NR-2 – measurements of nuclear magnetic moments 1
- Microwave Spectroscopy 1
  - Project M-1 – microwave spectrum of vinyl fluoride 1
  - Project M-2 – microwave spectrum of vinyl acetylene 2
  - Project M-3 – second-order quadrupole effects in asymmetric tops; microwave spectrum of vinyl iodide 2
- Infrared Spectroscopy 2
  - Project IR-1 – infrared and microwave spectra of formyl and deutero-formyl fluoride and related molecules 2
  - Project IR-2 – infrared spectrum of acetyl fluoride 4
  - Project IR-3 – infrared spectra of simple tritium compounds 4
- Optical Spectroscopy 5
  - Project OS-1 – optical instrumentation 5
  - Project OS-2 – spectroisotopic investigations 5
  - Project OS-3 – photodector investigations 7
  - Project OS-4 – isotope structure of the cadmium primary standard of wavelength 7
  - Project OS-5 – pressure scanning Fabry-Perot interferometer 7
  - Project OS-6 – hyperfine structure studies of U^{233} and U^{235} 9
  - Project OS-7 – Stark-effect studies in hollow-cathode sources 9
  - Project OS-8 – Echelle comparator 9
- Spectrochemistry 11
  - Project SC-1 – general spectrochemical analysis 11
  - Project SC-2 – rare-earth mixtures 12
  - Project SC-3 – photoelectric spectrochemistry 13
- X Rays 13
  - Project X-1 – chemical analysis by x-ray absorption and fluorescence 13
  - Project X-2 – x-ray diffraction analysis 15
  - Project X-3 – hyperfine structure in uranium isotopes 15
- Publications 18

MASS SPECTROMETER LABORATORY 19
- Introduction 19
- Isotope-Dilution Method of Analysis 19
- Uranium in Sea Water 20
- Investigation of ARE Fuels 21
- Uranium-Burnup Measurements (Pratt & Whitney Fuel Elements) 22
- Determination of Cesium-135 Concentration 22

[redacted]

[redacted]

Determination of Microgram Quantities of Technetium 23
Stable Isotope Analyses 24
Isotopic Analysis of Boron 25
A Study of the Direct-Current Discharge with a Mass Spectrometer 25
Aircraft Reactor Leak Test 25
Ion-Beam Measuring Technique 26
Rotating Receiver 26
Slit-Width Adjustment 26

STABLE ISOTOPE SEPARATION RESEARCH AND CALUTRON OPERATIONS 29
Introduction 29
Isotope Collections 29
Nickel (and copper), series GT-XBX 29
Iron, series GU-XBX 29
Iron, series GW-XBX 30
Chromium, series GS-XAX 30
Calcium, series GV-XAX 31
Rubidium, series GX-XBX 31
Research and Development 31

STABLE ISOTOPE CHEMISTRY 38
Introduction 38
Preparation of Charge Materials 38
Chemical Refinement of Isotopes 38
Hafnium and zirconium 38
Copper 38
Gadolinium 38
Chromium 38
Separation of Rare Earths 39
Publications 41

RESEARCH AND DEVELOPMENT STABLE ISOTOPES 42
Utilization of Stable Isotopes 42
Separation of Stable Isotopes 45

UTILIZATION OF ENRICHED STABLE ISOTOPES 48

ORGANIZATION CHART 57

[redacted]

[redacted]

PUBLICATIONS

H. W. Morgan and J. H. Goldstein, "Second-Order Quadrupole Effects in Asymmetric Tops: The Microwave Spectrum of Vinyl Iodide," *J. Chem. Phys.* **22**, 1427 (1954).

O. C. Yonts, *Filament Life in Low Pressure Arc Type Ion Source*, ORNL-1758 (Aug. 25, 1954).

P. S. Baker and W. R. Rathkamp, *Investigations on the Ranque-Hilsch (Vortex) Tube*, ORNL-1659 (Sept. 16, 1954).

H. E. Walchli, *Some Improved Measurements of Nuclear Magnetic Dipole Moments by Means of Nuclear Magnetic Resonance*, ORNL-1775 (Sept. 17, 1954).

P. S. Baker, G. F. Wells, and W. R. Rathkamp, "A Cell for the Preparation of Small Quantities of Alkali Metals," *J. Chem. Educ.* **31**, 515 (Oct. 1954).

C. E. Melton, G. S. Hurst, and T. E. Bortner, "Ionization Produced by 5-Mev Alpha Particles in Argon Mixtures," *Phys. Rev.* **96**, Nov. 1, 1954.

W. A. Bell, Jr., L. O. Love, and C. E. Normand, *A 2800°C Calutron Ion Source Unit and Its Use in Separating the Isotopes of Pd, Pt, Ru, and Ir*, ORNL-1767 (Sept. 3, 1954).

O. C. Yonts and L. O. Love, *Filament Activation with Gadolinium*, ORNL-1802 (in press).

C. P. Keim, "The Production of Enriched Non-Radioactive Isotopes at Oak Ridge National Laboratory," to be published in *Nature*.

P. M. Griffin and J. R. McNally, Jr., "Zeeman Effects in the Spectrum of Plutonium," to be published in the Jan. 1955 issue of *J. Opt. Soc. Amer.*

K. L. Vander Sluis and J. R. McNally, Jr., "The Nuclear Spin of U^{235}," to be published in the Jan. 1955 issue of *J. Opt. Soc. Amer.*

G. K. Werner, S. J. Ovenshine, D. D. Smith, O. B. Rudolph, and J. R. McNally, Jr., "Further Investigations in the Spectro-Isotopic Assay Technique for Lithium," accepted for publication in *J. Opt. Soc. Amer.*

MEETINGS AT WHICH PAPERS WERE PRESENTED

P. A. Staats, H. W. Morgan, and J. H. Goldstein, *The Infrared Spectra of Formyl Fluoride and Deuterated Formyl Fluoride*, Symposium on Molecular Structure and Spectroscopy, Ohio State University, Columbus, Ohio, June 14–18, 1954.

J. R. McNally, Jr., *High Resolution Spectroscopy at the Oak Ridge National Laboratory*, Rydberg Centennial Conference, University of Lund, Lund, Sweden, July 1–5, 1954.

C. V. Ketron, *A 2800°C Ion Source Used in the Collection of the Stable Isotopes of the Pt and Pd Group of Elements*, Tennessee Academy of Science, Physics-Astronomy Section, Nashville, Tenn., Nov. 26–27, 1954.

P. S. Baker, F. R. Duncan, and H. B. Greene, *Accelerator Targets from Enriched Stable Isotopes*, Tennessee Academy of Science, Nashville, Tenn., Nov. 26–27, 1954.

C. P. Keim, *The AEC-ORNL Program of Enriching Stable Isotopes*, Tennessee Academy of Science, Nashville, Tenn., Nov. 26–27, 1954.

Russell Baldock, *Mass Spectrometry Above 500°C*, Tennessee Academy of Science, Nashville, Tenn., Nov. 26–27, 1954.

[redacted]

[redacted]

OTHER MEETINGS ATTENDED BY MEMBERS OF THE DIVISION

C. P. Keim, Gordon Research Conference on the Chemistry of Stable Isotopes, Meridian, N.H., Aug. 15–20, 1954.

C. E. Normand, Conference on Gas Centrifuge Method for Isotope Separation, University of Virginia, Charlottesville, Va., Sept. 2, 1954.

P. S. Baker, American Chemical Society, New York, N.Y., Sept. 13–17, 1954.

C. P. Keim, National Committee on Constitution and Bylaws, American Chemical Society, New York, N.Y., Sept. 13–17, 1954.

C. W. Sheridan, American Chemical Society, New York, N.Y., Sept. 13–17, 1954.

Boyd Weaver, American Chemical Society, New York, N.Y., Sept. 13–17, 1954.

O. B. Rudolph, First International Instrument Congress and Exposition, Philadelphia, Penn., Sept. 13–19, 1954.

George Wells, National Electronics Conference, Chicago, Ill., Oct. 4–6, 1954.

H. E. Walchli, Joint Meeting of National Electronics Conference and First Annual Meeting of Professional Group Nuclear Science Institute of Radio Engineers, Chicago, Ill., Oct. 4–7, 1954.

O. C. Yonts, Gaseous Electronics Conference, New York, N.Y., Oct. 14–16, 1954.

C. P. Keim, Southeastern Regional Meeting, American Chemical Society, Birmingham, Ala., Oct. 20–23, 1954.

W. C. Davis, Southeastern Regional Meeting, American Chemical Society, Birmingham, Ala., Oct. 20–23, 1954.

F. M. Scheitlin, Southeastern Regional Meeting, American Chemical Society, Birmingham, Ala., Oct. 20–23, 1954.

J. A. Norris, Southeastern Association of Spectrographers Fall Meeting, Georgia Institute of Technology, Atlanta, Ga., Oct. 30, 1954.

J. R. McNally, Jr., Southeastern Association of Spectrographers Fall Meeting, Georgia Institute of Technology, Atlanta, Ga., Oct. 30, 1954.

TRAVELING LECTURE

J. R. McNally, Jr., *High Resolution Spectroscopy,* Vanderbilt University, Nashville, Tenn., Oct. 28, 1954.

PAPERS CONCERNING USAGE OF ENRICHED ISOTOPES

It is becoming increasingly difficult to determine whether enriched isotopes were or were not employed in research reported in publications, because often the principal part of the paper deals with results of radioactive nuclides obtained by bombarding enriched stable nuclides. Also, many experimenters use enriched stable isotopes so commonly that they treat them as any other commercial material.

	ISOTOPES USED
R. K. Sheline and J. R. Wilkinson (University of Florida), "Nuclide V^{53}," *Phys. Rev.* **94**, 729–30 (1954).	Cr^{53}
H. Marshak (Duke University), "Total Neutron Cross-Sections in the Kilovolt Region: Cu, Cu^{63}, Cu^{65}, and Ga," *Phys. Rev.* **94**, 774A (1954).	Cu^{63}, Cu^{65}
B. L. Cohen, R. A. Charpie, T. H. Handley, and E. L. Olson (Oak Ridge National Laboratory), "Maganese 57," *Phys. Rev.* **94**, 953–4 (1954).	Fe^{57}
J. M. Cork, M. K. Brice, L. C. Schmid, G. D. Hickman, and H. Nine (University of Michigan), "Neutron Capture in the Separated Isotopes of Platinum," *Phys. Rev.* **94**, 1218–1221 (1954).	Pt^{190}, Pt^{192}, Pt^{194}

[redacted]

[redacted]

G. M. Temmer and N. P. Heydenburg (Carnegie Institution), "Rotational Nuclear Energy Levels," *Phys. Rev.* **94**, 1399 (1954).	
L. N. Russell, W. E. Taylor, and J. N. Cooper (Ohio State University), "Gamma Radiation from Mg-26 Under Proton Bombardment," *Phys. Rev.* **95**, 99–101 (1954).	Mg^{24}, Mg^{25}, Mg^{26}
J. B. Weddell and J. H. Roberts, "Angular Distribution and Cross Section of $Li^6(n,\alpha)H^3$ for Neutrons of 1.1, 1.5, and 2.0 Mev," *Phys. Rev.* **95**, 117–120 (1954).	Li^6
R. L. Macklin and H. E. Banta (Oak Ridge National Laboratory), "$Li^6(d,t)$ Reaction," *Phys. Rev.* **95**, 302A (1954).	Li^6
H. Newson (Duke University), "Shell Effects in Highly Excited Nuclei," *Phys. Rev.* **95**, 299A (1954).	Various
T. H. Handley and B. L. Cohen (Oak Ridge National Laboratory), "New Isotope Identification Program on the Oak Ridge 86-Inch Cyclotron," *Phys. Rev.* **95**, 611–2A (1954).	Various
M. E. Bunker, J. W. Starner, and J. P. Mize, "The Disintegration of Ga^{70}," *Phys. Rev.* **95**, 612–3A (1954).	Ga^{69}
S. B. Burson, W. C. Jordan, and J. M. LeBlanc (Argonne National Laboratory), "The Isomeric States in $_{32}Ge^{75}$ and $_{32}Ge^{77}$," *Phys. Rev.* **95**, 613A (1954).	Ge^{74}, Ge^{76}
J. A. Collinson and W. W. Watson (Yale University), "Spectroscopic Isotope Shift in Hf(I) and Hf(II)," *Phys. Rev.* **95**, 621A (1954).	Hf^{174}, Hf^{176}, Hf^{178}, Hf^{180}
R. H. Hughes (University of Wisconsin), "Isotope Shift in the Li(I) Spectrum," *Phys. Rev.* **95**, 621A (1954).	Li^6, Li^7
W. E. Kunz, C. D. Moak, and W. M. Good (Oak Ridge National Laboratory), "The $Li^7(He^3,p)Be^9$ Reaction," *Phys. Rev.* **95**, 640 (1954).	Li^7
J. H. Gibbons and H. W. Newson (Duke University), "Total Neutron Cross Sections in the Kilovolt Region: Tl^{203} and Tl^{205}," *Phys. Rev.* **95**, 644A (1954).	Tl^{203}
D. A. Dahlberg and L. M. Bollinger (Argonne National Laboratory), "Analysis of Neutron Resonances in Zinc Isotopes," *Phys. Rev.* **95**, 645A (1954).	Zn^{64}, Zn^{66}, Zn^{67}, Zn^{68}
C. M. Braams (Massachusetts Institute of Technology), "(d,p) Reactions of Ca^{42} and Ca^{44}," *Phys. Rev.* **95**, 650A (1954).	Ca^{42}, Ca^{44}
N. P. Heydenburg and G. M. Temmer (Carnegie Institution), "Coulomb Excitation of Energy Levels in Rhodium and Silver," *Phys. Rev.* **95**, 861–3 (1954).	Ag^{107}, Ag^{109}
G. Beard and M. L. Wiedenbeck (University of Michigan), "Natural Radioactivity of Sm^{147}," *Phys. Rev.* **95**, 1245–6 (1954).	Sm^{147}
F. Ajzenberg (Boston University) and W. Franzen (Princeton University), "Neutrons from the Proton Bombardment of B^{10}," *Phys. Rev.* **95**, 1531–3 (1954).	B^{10}
M. M. Bretscher, J. O. Alderman, A. Elwyn, and F. B. Shull (Washington University), "Angular Distribution of Protons from $Na^{23}(d,p)Na^{24}$ and $Ti^{47,48}(d,p)Ti^{48,49}$," *Phys. Rev.* **96**, 103–109 (1954).	Ti^{47}, Ti^{48}
G. M. Temmer and N. P. Heydenburg (Carnegie Institution), "Coulomb Excitation Process in the Lighter Odd-Mass Nuclei," *Phys. Rev.* **96**, 426–33 (1954).	Ti^{47}, Fe^{57}, Ge^{73}, Zn^{67}
F. B. Shull and M. M. Bretscher (Washington University), "Angular Distributions in (d,p) Reactions with Ti^{47} and Ti^{48}," *Phys. Rev.* **96**, 826A (1954).	Ti^{47}

[redacted]

[redacted]

STABLE ISOTOPE RESEARCH AND PRODUCTION DIVISION SEMIANNUAL PROGRESS REPORT

SPECTROSCOPY RESEARCH LABORATORY

J. R. McNally, Jr., Department Head

INTRODUCTION

The Spectroscopy Research Laboratory is concerned with research and development in the fields of nuclear magnetic resonance, microwaves, infrared and optical spectroscopy, spectrochemistry, and x rays. Research is directed toward fruitful methods of isotope analysis; new element and compound analytical methods having application to immediate Laboratory or long-range Commission needs; and fundamental research on isotopes, elements, and compounds. The work is reported on a project basis to give a more complete picture of the purpose, activity, and status of each program. More detailed information on reported or inactive projects may be obtained from the previous semiannual report.[1]

Outstanding accomplishments during this semiannual period are as follows:

1. A research program on the molecular spectra of tritium compounds was initiated (Project IR-3).
2. A high-resolution recording interferometric method has been developed (Project OS-5).
3. The nuclear moments of U^{235} have been recalculated on the basis of $I = 7/2$ as $\mu = -0.85$ nuclear magnetons and $Q = +10 \times 10^{-24}$ cm^2 (Project OS-6).
4. Stark effects in the hollow-cathode source have been evaluated (Project OS-7).
5. The effects of impurities on x-ray fluorescence analysis methods for complex mixtures, such as rare earths or steels, have been investigated in detail (Project X-1).
6. The isotope structure of the primary standard of wavelength has been observed for the first time in eight electromagnetically separated cadmium isotope samples (Project OS-4).

NUCLEAR RESONANCE

H. E. Walchli

Project NR-1 – Table of Nuclear Moment Data

The second supplement to *A Table of Nuclear Moment Data*[2] is to be issued shortly. This supplement will include 91 revisions or additions to the data on isotope moments.

Project NR-2 – Measurements of Nuclear Magnetic Moments

A search for the nuclear magnetic resonances of Ba^{135} and Ba^{137} with the use of electromagnetically separated isotopes has resulted in the observation of a weak Ba^{135} resonance at $H \cong 12.4$ kilogauss and $f \cong 5.00$ Mc. A very preliminary g factor for Ba^{135} (uncorrected for diamagnetism) has been computed to be 0.5549, which compares favorably with the value of 0.5537 obtained by Hay.[3]

Final measurements on Ba^{135} will not be made until the Ba^{137} signal has been observed; this signal is expected to be considerably weaker because of its lower isotopic abundance in the separated isotope samples (58.5% for Ba^{135} and 43.5% for Ba^{137}).

MICROWAVE SPECTROSCOPY

H. W. Morgan J. H. Goldstein[4]

Project M-1 – Microwave Spectrum of Vinyl Fluoride

Several weak absorptions in the microwave spectrum of vinyl fluoride, previously considered to be due to excited vibrational states of the vinyl fluoride molecule, were found to be due to isotopic species containing C^{13} in its natural abundance. These isotopic spectra have now been measured, and the moments of inertia are being evaluated. These moments and certain assumed structural parameters are being used in calculations now in progress to evaluate the C–C distance, C–F

[1] J. R. McNally, Jr. *et al.*, *Stable Isotope Research and Production Semiann. Prog. Rep. May 20, 1954*, ORNL-1732, p 1.

[2] H. E. Walchli, *A Table of Nuclear Moment Data, Supplement No. 1*, ORNL-1469 (June 1, 1953).

[3] R. H. Hay, *Phys. Rev.* 60, 75 (1941).

[4] Consultant, Emory University, Atlanta, Ga.

[redacted]

distance, and F–C–C angle. Upon completion of this structural determination, a final report on this study will be issued.

The ORCLE has been programmed for the calculation of the energy levels of slightly asymmetric rotors, and with the use of the ORACLE the spectrum of vinyl fluoride has been computed up to the rotational level $J = 12$.

Project M-2 – Microwave Spectrum of Vinyl Acetylene

A procedure for the evaluation of the moments of inertia, asymmetry parameter, and centrifugal distortion constants of the vinyl acetylene molecule by the method of least squares previously discussed[1] has been modified for coding and is being coded for the ORACLE by members of the Mathematics Panel. The determination of these parameters should be completed within the near future. Upon receipt of these values, a final report on this study will be made.

Project M-3 – Second-Order Quadrupole Effects in Asymmetric Tops; Microwave Spectrum of Vinyl Iodide

The $J = 3 \rightarrow 4$ transition of the asymmetric rotor, vinyl iodide, has been observed[5] in the region 24,000 to 26,000 Mc. The transition groups $3_{12} \rightarrow 4_{13}$ and $3_{13} \rightarrow 4_{14}$ were studied, and the quadrupolar hyperfine patterns, arising from the iodide nucleus, were fitted to second-order theory with an average error of ±0.12 Mc. Spectra were observed with a Stark-effect microwave spectrograph in the region of 25,000 Mc, the 21 measured frequencies being accurate to ±0.05 Mc.

Values determined for the coupling parameters are $x_{aa} = -1656$ Mc and $x_{bb} = +770$ Mc, each to within ±10 Mc and where $x_{zz} = eQ\nabla E_{zz}$. On the assumption that the C–I bond is a principal axis of the x tensor, x_{zz}, the value along the C–I bond was found to be –1877 Mc, and $x_{ab} = x_{ab} = -765$ Mc. Assuming a planar molecule and neglecting centrifugal distortion effects, the final values of the rotational constants were $(b + c) = 6325.41 \pm 0.03$ Mc, $(b - c) = 192.03 \pm 0.05$ Mc, and $K = -0.9921554 \pm 0.0000031$.

[5] H. W. Morgan and J. H. Goldstein, *J. Chem. Phys.* 22, 1427 (1954).

INFRARED SPECTROSCOPY

P. A. Staats H. W. Morgan
J. H. Goldstein

Project IR-1 – Infrared and Microwave Spectra of Formyl and Deutero-Formyl Fluoride and Related Molecules

A study of the Raman spectrum of liquid formyl fluoride, at –40°C, has allowed assignment of the CH bending vibration, perpendicular to the molecular plane, to a band at 1244 cm^{-1}. No assignment of this vibration could be made from the infrared spectra reported previously.[1] All the fundamental frequencies were observed in the Raman spectrum and were measured to an estimated ±3 cm^{-1}. These frequencies are given in Table 1.

The frequency of this fundamental, 1244 cm^{-1}, is in basic agreement with assignments in molecules of similar structure[6,7] but differs from the

[6] L. M. Sverdlov, *Doklady Akad. Nauk S.S.S.R.* 91, 503 (1953).
[7] J. C. Evans, *J. Chem. Phys.* 22, 1228 (1954).

TABLE 1. FUNDAMENTAL VIBRATIONS OF THE FORMYL FLUORIDE MOLEUCLE

Bond Vibration	Gas (25°C), Infrared (cm^{-1})	Liquid (–40°C), Raman (cm^{-1})	Solid (–195°C), Infrared (cm^{-1})
CH stretching	2976	3020	3025
CO stretching	1834	1809	1806
CF stretching	1064	1042	1015
CH bending (in-plane)	1343	1344	1353
CH bending (out-of-plane)		1244	
FCO bending	661	662	668

assignment of 723 cm^{-1} for the comparable vibration in vinyl fluoride.[8] In order to confirm the 1244-cm^{-1} fundamental, the Raman spectrum of deutero-formyl fluoride will be studied.

In an attempt to observe the 1244-cm^{-1} band in the infrared, spectra of solid formyl fluoride and deutero-formyl fluoride, frozen on an AgCl plate cooled by liquid nitrogen, were observed. Hydrogen bonding in the solid was indicated by distortion and broadening of the CF and CH stretching vibrations and was proved by the changes in band shapes in frozen solid solutions of formyl fluoride in carbon disulfide. The observed frequencies in the solid are given in Table 1.

It was determined that the values for the diagonal force constants reported previously[1] were in error. In cooperation with the Mathematics Panel, attempts have been made to find a true solution to the secular equation. None have been successful to date, and the study of the problem is continuing. To allow comparison with molecules related structurally, a set of force constants was computed by using the method described by Torkington[9] and the observed frequencies of HCOF. These force constants satisfactorily generate the spectrum of DCOF, as shown in Table 2.

For comparison purposes the force constants of the isoelectronic molecules F_2CO and H_2CO were calculated by this same method. The values obtained for H_2CO have been used to predict the spectra of D_2CO. Tables 3 and 4 summarize the calculations performed on these molecules and list for comparison the force constants reported in the literature. The Torkington force constants give a satisfactory prediction of the spectra for both DCOF and D_2CO. The diagonal force constants, however, are more commonly used, and

[8] A. R. H. Cole and H. W. Thompson, *Proc. Roy. Soc.* (*London*) **A200**, 10 (1950).

[9] P. Torkington, *J. Chem. Phys.* 17, 1026 (1949).

TABLE 2. TORKINGTON FORCE CONSTANTS FOR HCOF AND THE OBSERVED AND PREDICTED SPECTRUM OF DCOF

Bond Vibration	Force Constants ($\times 10^5$ dynes/cm)	Spectrum of DCOF	
		Observed (cm^{-1})	Predicted (cm^{-1})
CH stretching	4.8957	2270	2198
CO stretching	15.1236	1793	1819
CH bending	0.2470	968	954
CF stretching	6.4219	1074	1084
FCO bending	1.1443	658	652

TABLE 3. FORCE CONSTANTS AND FUNDAMENTAL FREQUENCIES OF F_2CO

Type of Vibration	Torkington Force Constant* ($\times 10^5$ dynes/cm)	Observed Frequency** (cm^{-1})
CF stretching (symmetrical)	4.14	965
CF stretching (asymmetrical)	3.1	1249
C=O stretching	17.2	1942
FCF bending	1.25	626
FCO bending	0.38	584

*No force constants available in the literature for this molecule.

**P. J. H. Woltz and E. A. Jones, *J. Chem. Phys.* 17, 502 (1949).

TABLE 4. SUMMARY OF CALCULATIONS PERFORMED ON H_2CO

Type of Vibration	Torkington Force Constant ($\times 10^5$ dynes/cm)	Published Force Constant* ($\times 10^5$ dynes/cm)	Spectrum of D_2CO (cm^{-1})	
			Observed*	Calculated
CH stretching (symmetrical)	2.23	2.11	2160	2147
CH stretching (asymmetrical)	2.19	2.11	2056	2033
C=O stretching	13.19	12.06	1700	1701
HCH bending	0.64	1.46	1106	1088
CH_2 rocking (HCO bending)	0.28	0.57	990	1004

*E. S. Ebers and H. H. Neilsen, *J. Chem. Phys.* 5, 822 (1937); 6, 311 (1938).

every effort is being made to solve the secular equation mentioned above.

An investigation of the formyl fluoride structure recently carried out by workers at the California Institute of Technology with the use of the electron-diffraction technique[10] gave structural data in agreement with the assignments previously reported.[1] The low-*J* microwave transitions, lying above 55 kmc, which are necessary to complete the structural data, have not yet been observed in this laboratory.

Project IR-2 – Infrared Spectrum of Acetyl Fluoride

Acetyl fluoride, the second member of the series of acyl fluorides, has been synthesized, and a preliminary study of its infrared spectrum has been made. Vibrational assignments are being made by comparison with the spectrum of formyl fluoride, with the first member of the acyl fluoride series, and with the acetyl fluoride Raman spectrum which has been reported.[11]

Project IR-3 – Infrared Spectra of Simple Tritium Compounds

A research program has been initiated on the systematic study of the molecular spectra of some of the following tritium compounds: T_2O, T_2S, T_2Se, NT_3, PT_3, AsT_3, CT_4, SiT_4, GeT_4, TCl.

A literature survey has been completed in which papers dealing with the physical and chemical properties of tritium and tritium compounds were listed as well as papers dealing with the experimental and theoretical use of tritium in spectroscopic work. The latter part of this survey can be summarized briefly by saying that the only published works available are a series of papers on the emission spectra of T_2, HT, and DT, by Dieke of Johns Hopkins University, and two theoretical papers on calculations of the vibrational spectra of isotopic molecules. One of these is a paper by Libby[12] on the vibrational frequencies of the isotopic water molecules and the other by Tatevski[13] on the applications of lemmas of similarity to calculation of the vibrational spectra of isotopic molecules in which the fundamental frequencies of the simple molecules listed above are calculated.

Experimentally, the T_2 gas will be stored as uranium hydride[14] in a small stainless steel cylinder from which controlled amounts of T_2 may be evolved by heating. Synthesis of the above-mentioned compounds will be carried out in small evacuable systems designed for the purpose and utilizing catalytically induced reactions wherever possible, to avoid contamination and exchange with impurities. The spectra will be observed with the use of a small, specially designed gas cell of about 5-cc capacity and a liquid cell requiring about 100 μg of sample. Used samples will be decomposed and the T_2 gas reabsorbed in the storage cylinder.

[10] V. Schomaker, private communication, Sept. 22, 1954.

[11] H. Seewann-Albert and L. Kahovec, *Acta Phys. Austriaca* 1, 352 (1948).

[12] W. F. Libby, *J. Chem. Phys.* 11, 101 (1943).

[13] V. M. Tatevski, *Zhur. Fiz. Khim.* 25, No. 3, 274 (1951).

[14] A. S. Newton, *The Purification of Some Laboratory Gases*, MDDC-724, declassified Jan. 1, 1947; also, private communication from H. E. Banta of the ORNL High Voltage Laboratory.

The recording of the spectra of these tritiated compounds would complete the isotope study of these compounds in the infrared region, the hydrogen and deuterium forms having already been published. Spectra from a low-dispersion instrument, such as is available in this laboratory, would allow only the actual isotope shifts of fundamentals to be checked and compared with predicted shifts as calculated by the Teller-Relich product rule and other theoretical methods such as the one proposed by Tatevski.[13] High-dispersion spectra obtained on the infrared grating spectrograph at the University of Tennessee[15] could be expected to yield additional information on moments of inertia, bond distances and angles, potential constants, and centrifugal distortion constants.

OPTICAL SPECTROSCOPY

Project OS-1 – Optical Instrumentation

G. K. Werner

The optical system of the Leeds & Northrup (Knorr-Albers[16]) microphotometer has been investigated to improve resolution of close-lying line structures such as in hyperfine and isotope spectra. Significant improvement in line detail has been obtained by introducing a 0.0053-in. slit width for the normally used 0.022-in.-wide exit slit of the microphotometer. Magnification available with the existing lens system is about 11X, and this new smaller slit width represents only 12 μ of the plate being scanned. This corresponds to a plate resolution of the order of 80 lines per millimeter. The significant improvement introduced arises principally from a reduction in scattered light, inasmuch as the filament width at the plate is only about 8 μ; also, adjustment for infrared focus of both filament projector and plate projector improves detail, although this is not so noticeable with the narrow exit slit (see Table 5). The phototube used in this instrument is 921 and has a peak sensitivity at 8000 A. The focal-plane difference for infrared and visual light is about 0.002 in. A practice to be avoided is that of focusing the front microscope visually and maximizing the rear microscope for maximum phototube current.

The factors contributing to spectrum drift in the 21-ft Paschen-Runge grating spectrograph have been evaluated (Fig. 1). Approximately 70% correction for the range 2500 to 5000 A may be obtained by slit displacement or by rotation of a quartz plate just inside the spectrograph slit. Present temperature control of the grating room is to ±0.02°C, which corresponds to less than 1-mA spectrum shift; air-temperature transients (±0.07°C) due to heater operation also contribute less than 1 mA.

Project OS-2 – Spectroisotopic Investigations

J. R. McNally, Jr. M. R. Skidmore

A survey of a 3.4-m Ebert spectrograph[17] using a 7500 line per inch plane grating has been made in order to ascertain spectrographic resolution and other features pertinent to spectroisotopic analysis. The five-component isotope structure of λ 2536 A of mercury is completely resolved when a capillary discharge tube is operated at very low power (5%) from a Raytheon 2450-Mc Microtherm unit. At 10%

[15] Placed at our disposal through the courtesy of Dr. A. H. Nielsen of the University of Tennessee.

[16] H. V. Knorr and V. M. Albers, *Rev. Sci. Instr.* 8, 183 (June 1937).

[17] Manufactured by the Jarrell-Ash Co. as a pilot model.

TABLE 5. SCANNING DATA ON Hg 2537 A LINE FROM EBERT SPECTROGRAM UNDER VARIOUS EXIT-SLIT AND FOCUSING CONDITIONS OF THE MICROPHOTOMETER

Exit Slit	Focus	Average Minimum Density Between Lines	Average Maximum Density of Four Lines
Normal (0.222 in.)	Eye focus	0.053	0.350
	Infrared focus	0.051	0.360
Narrow (0.0053 in.)	Maximum signal	0.052	0.358
	Eye focus	0.039	0.360
	Infrared focus	0.042	0.370

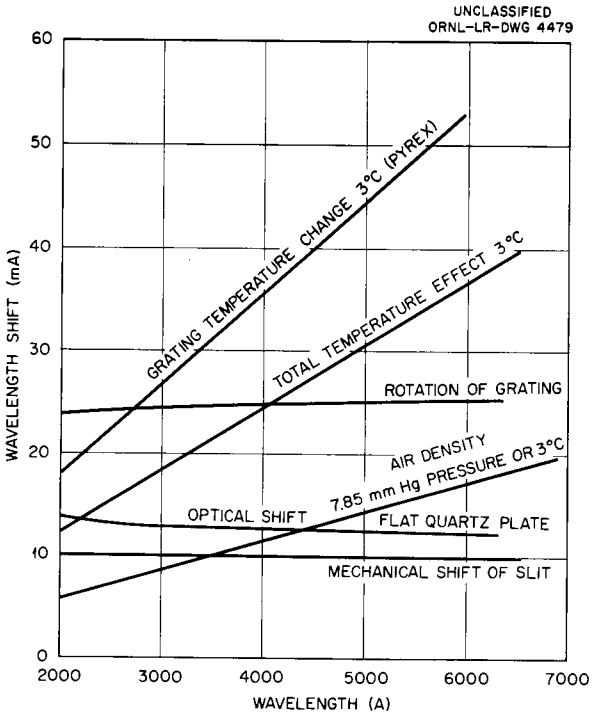

Fig. 1. Wavelength Shifts for ORNL Paschen-Runge Spectrograph.

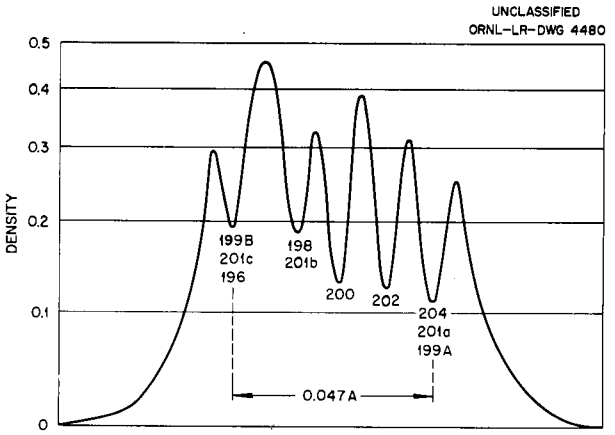

Fig. 2. Structure of Hg 2536 A Resonance Line in Self-Absorption as Observed with Ebert Spectrograph in Order XXIV.

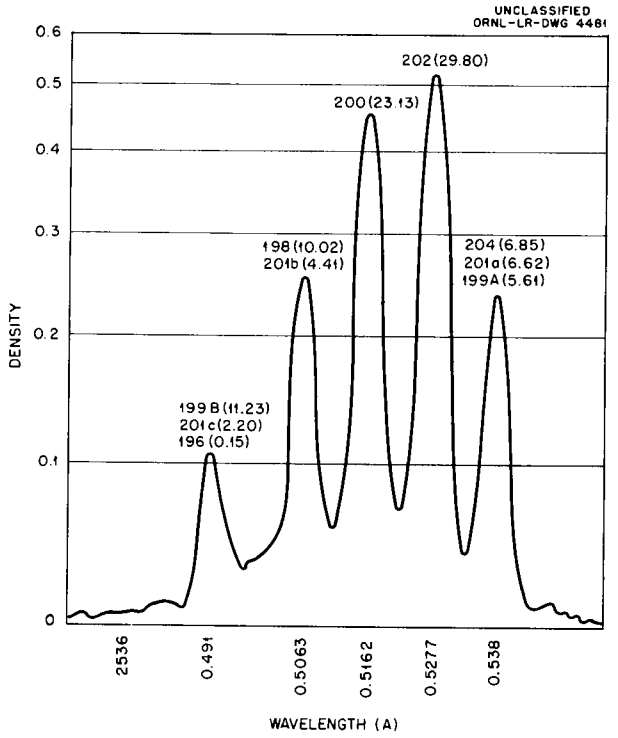

Fig. 3. Structure of Hg 2536.5 A Resonance Line as Observed with a 7500 Line per Inch Plane Grating in a 3.4-meter Ebert Mounting Grating Set at 63 deg for Order XXIV.

power the lines are seriously self-reversed as a result of high mercury source pressures. Figures 2 and 3 compare the two source conditions. Resolution of the spectrograph is about 500,000, inasmuch as at least 250,000 is required just to resolve the two closest components. Speed, because of increased dispersion and smaller grating aperture at the 63-deg XXIV order setting, is roughly 10% of that for a conventional Wadsworth spectrograph. Rowland ghosts are relatively strong in this high order, which indicates that interferences may be significant. It is estimated that such ghosts of intensity 3% or less and separated by about 1.22 A would occur in the neighborhood of the 4244-A uranium isotope line (XIV order). The evaluation of U^{234} at low concentrations in U^{235} by spectrographic methods will be investigated. A straightforward and complete spectrographic method for uranium in isotopic mixtures would simplify the material-control problem of all installations concerned with reactors.

Project OS-3 – Photodetector Investigations

O. B. Rudolph

A Beckman quartz monochromator has been converted to permit automatic spectrum scanning from 200 to 2000 mμ for the purpose of phototube testing, absorption, and Raman studies. The photomultiplier output is fed to an ORNL Q-826 electrometer and to a Brown recorder to give a permanent chart record. Three motor drive speeds are available, 0.04, 0.2, and 1.0 rpm, with four revolutions giving complete spectrum coverage. Spectrum resolution is at present about 3 A and is limited by spectrum line doubling caused possibly by slit effects.

Reflection characteristics and potential applications to Raman spectroscopy of multilayer filters are to be studied. It appears to be quite feasible to cut down scattered light of the exciting radiation (e.g., 4358 A) by selective reflection of the Raman radiation off a multilayer filter transparent to 4358 A. Efficiency expected per reflection at a distance of 40 A or farther from 4358 A would be of the order of threefold.

Project OS-4 – Isotope Structure of the Cadmium Primary Standard of Wavelength

J. H. Wise[18] K. L. Vander Sluis

The red cadmium line now used as the primary standard of wavelength has a wavelength of 6438.4696 A. Michelson[19] originally selected this line as the purest of spectrum lines from a study of the visibility or sharpness of the line under conditions of long interfering path lengths in the Michelson interferometer. He concluded that the line was single and had a half-width of 0.0065 A. Subsequent attempts to determine any structure in the line by Minkowski and Bruck[20] and by Meissner[21] revealed only a slight asymmetry in the line even with an atomic beam giving a half-width of only 0.0079 A.

Isotope shifts in the 4415-A line of singly ionized cadmium have been reported by several workers[22] who found isotope line separations of the order of 0.010 A for successive even masses and anomalies which reveal evidence of a nuclear volume effect.[23] Inasmuch as the total shift of 0.049 A for λ 4415 A is many times the half-width of 0.0079 A for λ 6438 A, the problem of evaluating the actual structure of the primary standard of wavelength is quite difficult. With the use of the eight enhanced isotopes of cadmium, measurements of the center-of-gravity line position have been made to better than 1 part in 25 million or to about 0.0003 A. Numerous interferograms are being evaluated in terms of the constituent isotope contributions and are expected to give significant information on the actual line structure of the primary standard of wavelength. Preliminary results indicate significant structure anomalies in line positions, which may be attributed to nuclear shell effects.

The cadmium was excited in 9-mm Vycor tubes, 3 in. long, containing 1 mg of cadmium with 7 mm of helium as carrier gas and excited with the Raytheon 2450-Mc Microtherm unit. A 21-ft Wadsworth spectrograph was used as a premonochromator for the Fabry-Perot etalon and 20-in. camera lens. The etalon plates were silvered to 88% reflectivity and spaced 58 mm apart. Resolution was limited principally by source effects due to Doppler broadening and was estimated at 500,000.

Russian workers[24] have proposed that a cadmium isotope, Cd^{114}, be selected as a new standard of length. They have measured the red line of cadmium for three separated isotopes, Cd^{112}, Cd^{114}, and Cd^{116}, and found significant wavelength differences between isotopes, of the order of 1 part in 5 million (0.0013 A). No information is available on the isotopic purity of their samples.

Project OS-5 – Pressure Scanning Fabry-Perot Interferometer

K. L. Vander Sluis W. F. Peed

Conclusions reached in the study of aperature limitations of the Fabry-Perot interferometer[1] were that certain deleterious effects occurred even under normal conditions of use and that these effects could be easily minimized by increasing the effective aperture of the interferometer. In general, the effective aperture of the interferometer can be

[18] Summer research participant, Washington and Lee University, Lexington, Va.

[19] A. A. Michelson, *Phil. Mag.* 31, 338 (1891); 34, 280 (1892).

[20] R. Minkowski and H. Bruck, *Z. Physik* 95, 274 (1935).

[21] K. W. Meissner, *J. Opt. Soc. Amer.* 32, 185 (1942); K. W. Meissner and K. F. Luft, *Ann. Physik* 28, 667 and 29, 698 (1937); also *Z. Physik* 106, 362 (1937).

[22] E. C. Woodward and D. R. Speck, *Phys. Rev.* 96, 529 (1954).

[23] W. R. Hindmarsh, H. Kuhn, and S. A. Ramsden, *Proc. Phys. Soc. (London)* A67, 478 (1954).

[24] N. R. Batarchukova, A. I. Kartashev, and M. F. Romanova, *Doklady Akad. Nauk S.S.S.R.* 90, 153 (1953).

increased by increasing the physical size of the interferometer plates, which would, of course, mean increasing the optics of the camera to the same degree. However, a much more desirable method is to observe only the central portion of the Fabry-Perot pattern; this limits the angle of the observed rays and consequently increases the effective aperture of the interferometer. The effective aperture is defined as $k = a/t\theta$, where a is one-half the physical aperture, t is the spacing of the interferometer, and θ is the angle that the observed ray makes with the normal to the interferometer.

The central spot of the interferometric pattern can be observed very effectively by photoelectric detection. In order to extract useful information from this observation, the order of interference of the radiation incident on this spot must be varied. The most promising method of achieving this scanning is to vary the index of refraction of the medium between the interferometer plates.[25] Briefly this may be expressed as follows:

$$n = 2t\sigma + \frac{(\mu_0 - 1)T_0 2t\sigma}{P_0 T} P$$
$$= n_{vac} + \alpha P \quad ,$$

where

n = order of interference,
t = spacing of the interferometer,
σ = wave number of the radiation,
T = absolute temperature,
P = pressure,
μ_0 = index of refraction at T_0, P_0.

Therefore the order of interference will change linearly with the density of the medium between the interferometer plates. An X-Y recorder, which has as its y coordinate a measure of the pressure and as its x coordinate a measure of the intensity of pattern at the central spot, has been applied to this problem. Since the wave number of radiation and the order of interference are proportional, this system plots the data in the form of intensity vs wave number.

[25] Communication from R. A. Fisher, Northwestern University, Evanston, Ill., Nov. 1951; thesis of W. J. Davis, Jr., Aug. 1951; J. Brochard, R. Chabbal, H. Chantrel, and P. Jacquinot, *J. Phys. radium* 13, 433 (1952).

Correction of the aperture effects of the Fabry-Perot interferometer by converting to a pressure-scanning photoelectric-detection system has eliminated most of the objectionable features of the interferometer. The photographic step has been replaced by photoelectric detection, and the form of the data obtained is ideal for studies of hyperfine structure where an intensity analysis might be required. In the same manner, the precise measurement of vacuum wavelengths no longer involves tedious reduction of data; this is replaced by a simple linear extrapolation of order number vs pressure to the value of the order of interference at zero pressure, which yields $n_{vac} = 2t/\lambda_{vac}$.

The above system has been assembled and is now in the stage of testing. The major problem involved is to obtain an electrical signal indicating the pressure in the interferometer to an accuracy of 0.1 mm Hg over the range of atmospheric pressure to vacuum (<0.1 mm Hg). The vacuum system consists of an 8-in. section of 5½-in.-dia aluminum tubing which houses the interferometer, and joined to this is a mercury barometer. The level of mercury is measured by the resistance of a No. 24 nichrome wire hairpin installed in the barometer and short-circuited by the top of the mercury column. The resistance is measured by means of a Wheatstone bridge which is made of the nichrome resistance, a 10-turn Helipot, and two fixed resistance arms. The bridge is self-balancing in that an off balance caused by a change in mercury level is fed to a Brown servo amplifier which drives the Helipot to a balancing resistance; the rotation of the Helipot, in turn, provides the y-axis position of the chart. At present, the precision of the pressure recorded in this manner is of the order of 0.2 mm Hg over the range from atmospheric to vacuum.

Helium gas, which has a differential refractive index of $\mu_0 - 1 = 0.000036$, as compared to 0.000293 for air, has been tested, and its use permits the scanning of several fringes from air to vacuum conditions, whereas air allows more than 20 such fringes. Thus the 0.2 mm Hg pressure sensitivity is approximately four times more sensitive than that required if helium is used. Errors caused by impure gas may be eliminated by computing the extrapolated λ_{vac}.

Project OS-6 – Hyperfine-Structure Studies of U^{233} and U^{235}

The nuclear spin of U^{235} has been revised[26] to 7/2 on the basis of new hyperfine data. A recalculation of the other nuclear moments of this isotope gives $\mu = -0.85$ nuclear magnetons and $Q = +10 \times 10^{-24}$ cm^2. This compares with $\mu = -0.8$ and $Q = +8 \times 10^{-24}$ reported previously[27] on the basis of $I = 5/2$.

Project OS-7 – Stark-Effect Studies in Hollow-Cathode Sources

J. R. McNally, Jr.

The hollow-cathode source is considered to be a high-resolution source of excitation, the region of the negative glow being essentially free of electrical field gradients. In many applications of hollow-cathode light sources there is a possibility of incorporating light from the Crookes dark space and the cathode glow as well as from the cylindrical zone of high-intensity negative glow. In addition, operation of the hollow cathode at current densities much above the density required to produce the onset of the so-called abnormal glow may be expected to give ionic Stark fields which will broaden spectrum lines, especially in the wings of the line. This effect can influence measurements involving hyperfine and isotope structures.

Two distinct modes of operation of the hollow-cathode discharge are recognized: the *normal* discharge for which case the cathode area covered by the glow increases linearly with current and the *abnormal* discharge for which case the cathode potential fall increases very rapidly with increase of current or decrease of pressure. Slepian and Mason[28] have given empirical relations for numerous gases and cathode materials for the *abnormal* discharge. In general, the product of gas pressure and Crookes dark space distance, pd, in mm (Hg) cm, averages about 0.3, and the relation between cathode drop V_a, in volts, current density j_a, in amperes per square centimeter, and pressure p, in mm Hg, is

$$V_a = E + \frac{F\sqrt{j_a}}{p} ,$$

where, for numerous gases and cathode materials, the constants E and F average 250 and 150, respectively.

The Stark effect in the hollow cathode was investigated by using hydrogen as the gas most sensitive to Stark shifts and the conventional aluminum cathodes used in spectroisotopic assay work. The expected large potential fall in the Crookes dark space region was observed, the hydrogen Balmer line H_β showing Stark splittings of about 0.40-mm total shift or about 1.0 A at λ 4861 A. This corresponds to an electrical-field gradient of 3500 v/cm. Estimated precision in this measurement can be improved to about 100 v/cm. Similar studies by Schüler[29] revealed comparable potential falls, and in the case of asymmetrical cathode holes, gradients of 25,000 v/cm were obtained. The cathode fall measured in the aluminum-hydrogen case agrees with the value estimated from electrical considerations, the Crookes dark space being about 1 mm and the voltage drop about 300 v.

Project OS-8 – Echelle Comparator

P. M. Griffin

The two-dimensional dispersion obtained from an Echelle-Littrow spectrograph makes impractical the use of conventional spectrum-measuring devices for the reduction of Echellograms. The array of spectrum lines in an Echellogram is shown schematically in Fig. 4. A coordinate comparator that greatly simplifies the measurement of such spectra has been designed and built. This instrument, shown in Fig. 5, facilitates measurement of displacements, parallel to the Echelle dispersion, which lead to $m\lambda$ values for lines and, in addition, indicates the order number m of a line from its position along the direction of the prism dispersion.

Although the net dispersion of the Echelle-Littrow combination is the vector sum of the Echelle and prism dispersion, which are at right angles to each other, only the component parallel to the Echelle dispersion is used in the measure-

[26] K. L. Vander Sluis, *Stable Isotope Research and Production Semiann. Prog. Rep. May 20, 1954*, ORNL-1732, p 7; to be reported in *J. Opt. Soc. Amer.*, Jan. 1955.

[27] K. L. Vander Sluis and J. R. McNally, Jr., *J. Opt. Soc. Amer.* **44**, 87 (1954).

[28] J. Slepian and R. C. Mason, *Elec. Eng.* 53, 515 (1934).

[29] H. Schüler, *Physik. Z.* **22**, 264 (1921); also, *Z. Physik* **35**, 323 (1926).

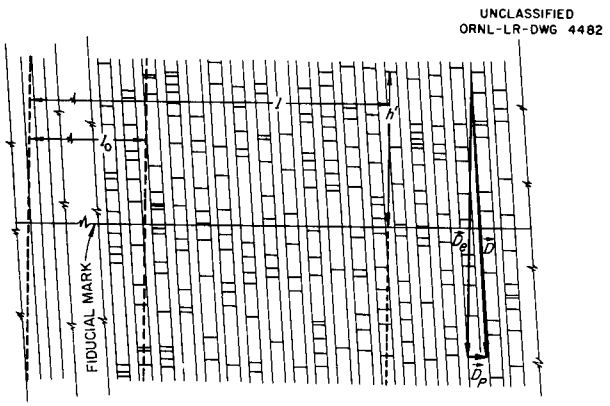

ALL LINES IN A GIVEN CHANNEL HAVE THE SAME ORDER OF INTERFERENCE m

h' = THE DISPLACEMENT OF A LINE FROM THE FIDUCIAL MARK IN THE DIRECTION OF THE ECHELLE DISPERSION,

l = THE POSITION OF A LINE RELATIVE TO SOME ARBITRARY REFERENCE POINT IN THE DIRECTION OF THE PRISM DISPERSION,

$\vec{D}_e$ = THE ECHELLE DISPERSION,

$\vec{D}_P$ = THE PRISM DISPERSION,

$\vec{D}$ = THE NET DISPERSION.

Fig. 4. Diagram of Spectrum Array as Produced by an Echelle-Littrow Spectrograph.

ment of wavelengths from Echellograms. Thus the problem of wavelength measurement resolves itself into the determination of the value of $m\lambda$ for each line, since the Echelle dispersion is characterized by the grating equation

$$m\lambda = a(\sin i + \sin \theta) \quad . \tag{1}$$

If θ, the angle of diffraction, is represented by $(\theta_0 + \Delta\theta)$, where θ_0 is the angle subtended by a fiducial mark located at the Littrow slit, which is a distance P from the Echelle mirror, the characteristic equation becomes

$$m\lambda = (\sin i + a \sin \theta_0) + \left(\frac{a \cos \theta_0}{P}\right) h + \left(\frac{-a \sin \theta_0}{2P^2}\right) h^2 + O(h^3) \quad . \tag{2}$$

The term h represents the distance a line is displaced along the Littrow slit from the fiducial mark. Dropping terms involving the third power of h or higher leads to errors of 10 ppb in the value of $m\lambda$, and these errors may be disregarded. Then, for a given setting of the Echelle,

$$m\lambda = A + Bh + Ch^2 \quad , \tag{3}$$

or

$$m\lambda = A + Bh + \epsilon(h) \quad .$$

Since h can be measured at best to $\pm 1\ \mu$ with this instrument, the accuracy with which $m\lambda$ can be determined is limited to 1 part in 5 million. (The relative magnitudes of the three terms in Eq. 3 are approximately 2,280,000, less than 3000, and less than 20.) Thus the correction term $\epsilon(h)$ need be determined only once for a given spectrograph, since all settings of the Echelle will be well within the 5-deg interval necessary to keep C constant to within 3%. For all exposures made at a given setting of the Echelle, B will be constant to within the necessary precision. The value of A must be determined experimentally for each plate and B at least once for each setting of the Echelle. Spectrum line displacements h at the Littrow slit will be observed as displacement $h' = Mh$ at the Littrow focal plane, where M is the Littrow magnification.

For many purposes (e.g., identification of lines of a known spectrum) an accuracy of 1 part in 100,000 is sufficient. In such cases it is necessary only to evaluate A for that plate, to use previously determined values of B for that Echelle setting, and to disregard the h^2 term. Precise measurement of Zeeman splittings, isotope displacements, or hyperfine structures will require inclusion of the h^2 term, inasmuch as the dispersion along the Echellogram channel will vary by approximately 1%.

The order number m of a line can be expressed as a function of the approximate wavelength and the $m\lambda$ value of the line and is equal to the nearest integer to $m\lambda/\lambda_{approx}$. Thus, with the use of the Hartman prism-dispersion formula, the order number m of a line is given by

$$m = \text{nearest integer to } \frac{m\lambda(h)}{\lambda(l)} = \frac{A + Bh + Ch^2}{\lambda_0 + [c/(l_0 - l)]} \quad . \tag{4}$$

A scale can be calibrated such that the value of m will be determined from the position of the line l and its displacement h. Figure 6 shows a section of such a scale and the indicator. Although the cross hair intersects two different lines of constant m, in practice there is never any doubt because lines appearing below the fiducial mark will require the larger m value. The scale is mounted on the movable-plate stage, while the indicator is attached to the stationary base. A separate scale is required for each Littrow setting;

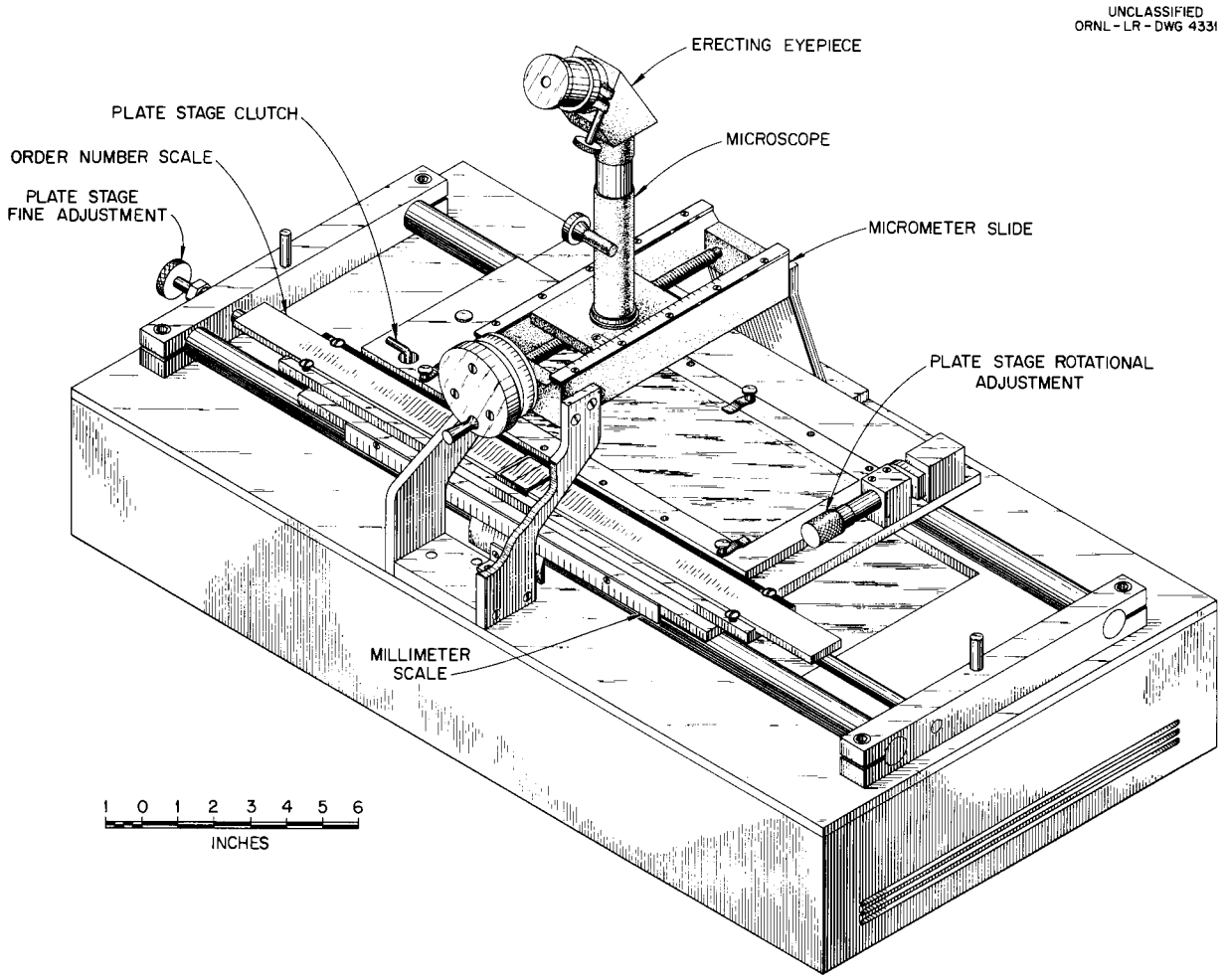

Fig. 5. Echelle Comparator.

this necessitates having five or six scales for the region from 2100 to 2900 A. With the microscope cross hair set on a line of known m, the order-number scale is adjusted so that the indicator reads this same number m. With the scale locked in this position, the indicator will give the value of m for any line on the plate when the image of that line is in juxtaposition with the microscope filar.

Final testing and evaluation of the instrument and methods and the preparation of order-number scales and correction curves are still in progress.

[30]Research participant, University of Alabama, University, Ala.

SPECTROCHEMISTRY

Project SC-1 – General Spectrochemical Analysis

M. R. Skidmore E. L. Grove[30]
J. A. Norris

A study has been initiated of matrix effects on the analytical results obtained by the graphite-base general spectrochemical method used in the analysis of separated isotopes and miscellaneous materials. The work thus far has been limited to the effect of fluorides, chlorides, carbonates, and sulfates of some alkali and alkaline-earth elements on lines of Al, Fe, Ca, Ba, and Si over a limited concentration range of the matrix element. Figure 7 shows the effect of several chloride salts on the intensity of Al I lines (2367.1 and/or

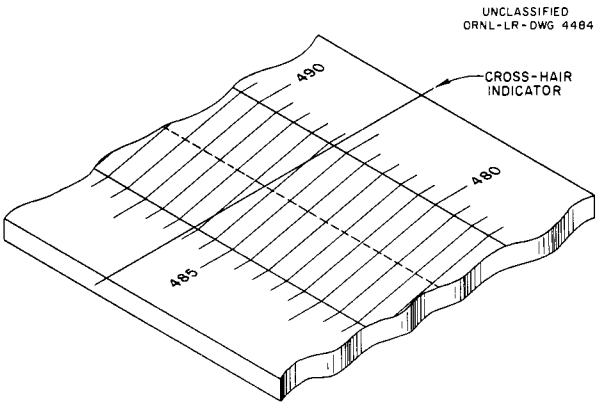

Fig. 6. Portion of an Order-Number Scale and Indicator. The cross hair indicates either 486 or 487, depending on whether the spectrum line falls above or below the fiducial mark on the plate; the dashed line corresponds to the position of the fiducial mark on the plate.

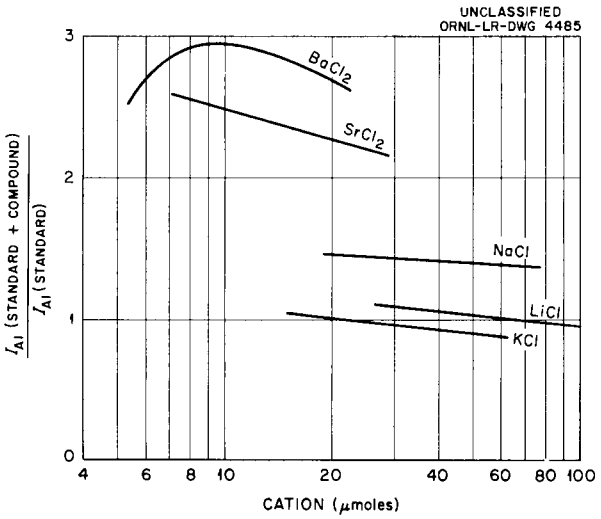

Fig. 7. Influence of Various Matrices on Al I Line Intensity (Common Anion).

2660.4 A), and Fig. 8 shows the effect of several sodium salts on the same Al I lines. Inasmuch as each ratio should be unity at zero matrix concentration, in each case a maximum must be expected to occur at different concentrations for each element line and matrix salt combination.

A study of the onset of enhancement of the Al I lines revealed a very linear increase in intensity

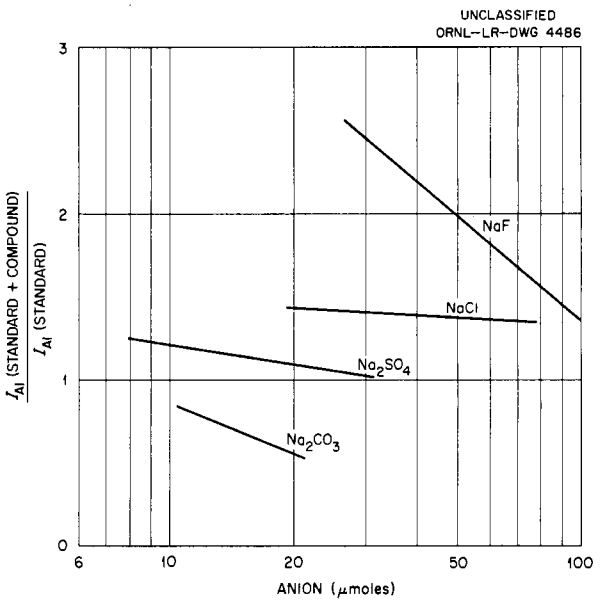

Fig. 8. Influence of Various Matrices on Al I Line Intensity (Common Cation).

up to 4 μmoles of NaCl, after which the enhancement levels off and then decreases.

A total of 792 samples comprising 9913 elemental determinations have been run during this period.

Project SC-2 – Rare-Earth Mixtures

J. J. Mundzak J. A. Norris

Operations of the Rare-Earth Separations Group of this division have provided 197 rare-earth mixtures to be analyzed, representing 2127 quantitative determinations.

The procurement of gadolinite ore[1] as source material for the yttrium group elements has necessitated the preparation of thulium and lutetium standards. Standards in the approximate range 50 to 2000 ppm are now available for the whole rare-earth period. With the use of the spectrographic method developed in this laboratory[31] and these standards, it is possible to analyze for all rare-earth elements in an individual sample. Standards are normally prepared in groups of elements representing the ones being separated during current operations. Table 6 shows the composition of a set of standards presently in use for the middle of the rare-earth series.

[31] J. A. Norris and C. E. Pepper, *Anal. Chem.* **24**, 1399 (1952).

TABLE 6. REPRESENTATIVE RARE-EARTH STANDARDS FOR SPECTROCHEMICAL ANALYSIS

Element	Micrograms of RE_2O_3 per Milliliter				
	Standard				
	1	2	3	4	5
Eu	200	100	50	25	
Gd	1000	400	200	100	
Tb	100		1000	400	200
Dy	100	200	400	1000	2000
Ho			100	200	400
Er		100	1000	400	200
Yb	200		100	50	25
Y	1000	2000	100	400	200

Project SC-3 – Photoelectric Spectrochemistry

S. J. Ovenshine O. B. Rudolph
G. K. Werner

Preliminary investigations have been made on the precision of direct-current analysis for thorium in monazite ores in the range 0.1 to about 5%. Three 1P28 phototubes were set behind slits mounted on the 21-ft Paschen spectrograph to view the lines Ce 2613.89 A, Ce 2745.72 A, and Th 2684.29 A. It was found to be necessary to introduce in the optics a Corning filter No. 9863 to reduce scattered light in the spectrograph. The Baird direct-reader circuit was revised to permit a 112-sec light integration period followed by a dark-current compensating period of 112 sec. This single-cycle exposure control permits selection of numerous exposure times up to a maximum of 144 sec, followed by an equivalent dark-current compensation period. A working curve has been established, but considerable scatter of data exists; analysis precision appears to be very adversly affected by the variable sample burnout period. The average deviation of standards from the working curve was 0.12% for the range 0.1 to 1.0%. A revised burning procedure involving source cutoff on expiration of the burning period appeared to reduce this error significantly.

X RAYS

Project X-1 – Chemical Analysis by X-Ray Absorption and Fluorescence

H. W. Dunn W. F. Peed

The significance of analytical errors in x-ray fluorescence, when applied to nonspecification analyses when standards and samples are grossly different and to other than binary mixtures, has been discussed previously.[1] It was pointed out that large errors occur in rare-earth analyses and in synthetic matrices involving fourth-period elements except in special cases. Similar work has been reported by Clark, Wagner, and Carley[32] on rare earths and by Beattie and Brissey[33] on fourth-period elements.

If A designates the sought-for constituent and B represents the other constituents in the sample, the intensity of A's fluorescence radiation is reduced by selective absorption of the incident radiation by B, increased by fluorescence excitation of A by B fluorescence, and decreased by selective absorption of A's outgoing fluorescence radiation. In addition, A is affected differently than B by the type of line-continuum radiation character of the exciting source. These effects may be generalized mathematically as

$$I_{A\lambda_0} = \int_{\lambda_{K\ \mathrm{edge}\ A}}^{0} \int_0^{\infty} S(\lambda)E(\lambda)C_A\, e^{-a_i\Sigma\mu_i(\lambda)x - a_0\Sigma\mu_i(\lambda_0)x}\, dx\, d\lambda + \int_{\lambda_{K\ \mathrm{edge}\ A}}^{0} \int_0^{\infty} S'(\lambda,x)E(\lambda)C_A\, e^{-a_0 x\Sigma\mu_i(\lambda_0)}\, dx\, d\lambda\,,$$

where

$I_{A\lambda_0}$ = intensity of fluorescence radiation due to element A at $\lambda_0 = K_a(A)$,

[32] G. L. Clark, W. F. Wagner, and D. W. Carley, *Analysis of Rare Earths by Secondary X-Ray Emission Spectra Using a High Intensity X-Ray Source and a Geiger Counter Spectrometer*, NP-22 (Aug. 18, 1947).

[33] H. J. Beattie and R. M. Brissey, *Anal. Chem.* **26**, 980 (1954).

$S(\lambda)$ = source intensity per unit wavelength, including spectrometric factors,
$E(\lambda)$ = efficiency of exciting $K_\alpha(A) = \lambda_0$,
C_A = concentration of A in sample,
$S'(\lambda,x)$ = fluorescence intensity in sample per unit wavelength, including wavelength and spatial dependence,
α_i, α_0 = geometrical factors for incident and exit angles (approximately a cosecant term),
$\mu_i(\lambda)$ = linear-absorption coefficient of element i at wavelength λ,
x = distance into sample from surface of element dx.

Some results of an extensive investigation of fourth-period impurity effects at the 10% level on nickel with zirconium used as a reference are given in Fig. 9. During this period of data taking, the zirconium intensity was constant to within ±5%, showing an almost linear increase from 220 to 245 counts/sec as the fluorescence wavelength (K_α) of the interfering impurity increased. Maximum deviation from this straight-line relation was about −2.5% for zinc.

Figure 9 illustrates the order of magnitude of the enhancement effects to be expected from elements having a K_α which can cause fluorescence excitation of the nickel. Thus in the nickel region for elements of $Z + 2$ to $Z + 6$ the interference effect is revealed as an enhancement of the nickel fluorescence intensity by about +6.6% for the 10% impurity added. For the 10% interfering element $Z + 1$ the error is +2.0%, whereas for $Z - 1$ the

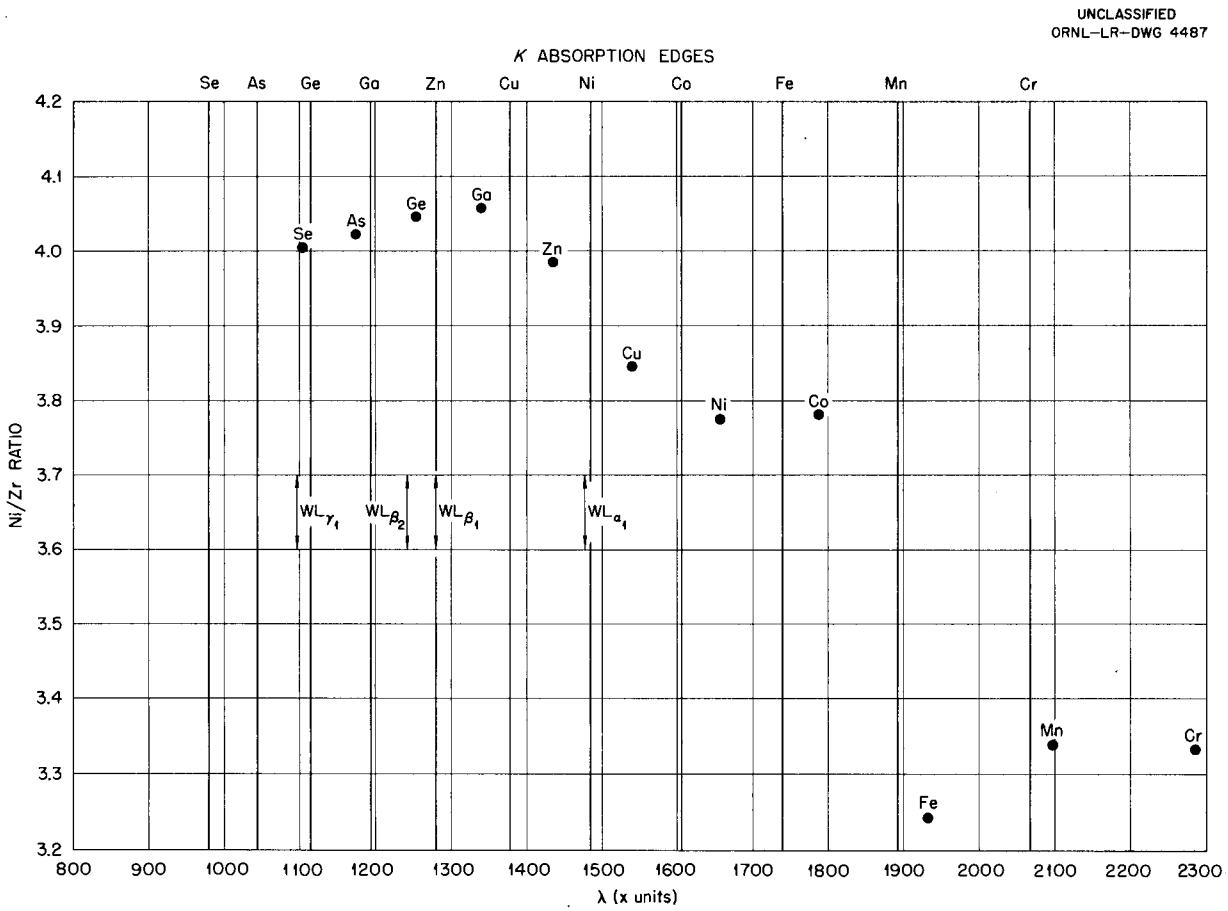

Fig. 9. Nickel-Zirconium Fluorescence Line Intensity Ratios for Various Element Interferences. The observed ratios are plotted as a function of the K_α wavelength of the impurity element. The K absorption edges of the various elements and the characteristic K spectrum lines of the tungsten x-ray tube cathode are illustrated.

error is negligible. In the cases of $Z - 2$ through $Z - 4$ interferences, the absorption losses are not compensated by fluorescence stimulation of the Ni K_α, and the error produced by the 10% impurity interferences is about −12%.

Project X-2 – X-Ray Diffraction Analysis

H. W. Dunn

Numerous chemical-compound identifications have been completed for the ANP, HRP, Materials Chemistry Division, and Y-12 laboratories. These include such materials as corrosion products, uranium phosphate solubility specimens, and uranium combustion products.

Work has continued on the tabulation of x-ray diffraction data for new compounds on which no x-ray data are presently available. Pure samples of NiF_2 showed many unlisted lines which have been correlated with the structure type assigned by Wyckoff (tetragonal SnO_2 type of structure with a_0 = 4.710 and C_0 = 3.118). This new information, which reveals important line extinctions in the ASTM data, is listed in Table 7. X-ray diffraction data on $PbUO_4$ and UO_2HAsO_4 are also included in Tables 8 and 9, respectively. All data were recorded with the use of a copper-target x-ray tube and nickel filter.

Project X-3 – Hyperfine Structure in Uranium Isotopes

W. F. Peed G. L. Rogosa[34]

Recent work by Rogosa and Schwarz[35] on uranium L_{II} and L_{III} x-ray spectral lines and molybdenum K lines, using separated isotopes, for isotope effects in x-ray spectral lines showed no measurable effect. It is known that such effects, if observable, will be greatest in the K and L_I levels of heavy elements.

Samples of U_3O_8 were prepared in a form suitable for use in x-ray equipment located at Florida State University, and a joint project between this University and ORNL was undertaken to investigate the isotope shift by using U^{233}, U^{235}, and U^{238} and observing the L_{β_3} line (L_I–M_{III}).

Standard techniques of precision x-ray spectroscopy were used. Excitation of the sample was by direct electron bombardment at 32,000 v with a regulated power supply and a demountable-target x-ray tube. A double-crystal x-ray spectrometer and a Geiger tube for intensity measurements were used. Previous work by Rogosa has shown that a precision of 0.1 v in energy measurement with this

[34] Former research participant, Florida State University, Tallahassee, Fla.

[35] G. L. Rogosa and G. Schwarz, *Phys. Rev.* **92**, 1434 (1953).

TABLE 7. X-RAY DIFFRACTION DATA ON NiF_2

Intensity	Spacing, d (A)	hkl	Intensity	Spacing, d (A)	hkl
0			30	1.124	222
Edge	21.24		15	1.096	330
100	3.29	110	20	1.065	312
80	2.57	101	20	1.059	411
20	2.32	200	15	1.039	420
50	2.25	111	10	1.003	103
30	2.08	210	10	0.9280	402
90	1.723	211	20	0.9210	510
50	1.642	220	10	0.9118	332
40	1.541	002	20	0.8931	501
40	1.470	310	30	0.8904	511
40	1.396	112	15	0.8620	422
50	1.384	301	20	0.8563	303
5	1.327	311	30	0.8314	521
10	1.284	202	2	0.8062	323
5	1.238	212	5	0.803	530
20	1.189	321	20	0.7848	512
15	1.161	400	Edge	0.7728	

TABLE 8. X-RAY DIFFRACTION DATA ON $PbUO_4$

Intensity	Spacing, *d* (A)	Intensity	Spacing, *d* (A)	Intensity	Spacing, *d* (A)
0		30	1.422	1	1.005
Edge	22.31	5	1.388	2	1.001
80	3.25	30	1.380	20	0.994
70	3.19	3	1.352	15	0.978
5	2.99	2	1.332	10	0.967
50	2.82	30	1.323	15	0.960
30	2.74	2	1.316	5	0.953
5	2.58	2	1.311	20	0.946
5	2.32	2	1.305	3	0.934
5	2.23	40	1.292	3	0.922
5	2.21	10	1.282	20	0.913
2	2.17	20	1.264	5	0.900
3	2.10	40	1.244	15	0.885
10	2.07	20	1.229	10	0.878
30	2.03	10	1.211	20	0.874
100	1.975	10	1.193	5	0.867
5	1.923	5	1.183	3	0.861
5	1.861	30	1.168	2	0.853
20	1.815	20	1.146	10	0.846
5	1.778	5	1.135	2	0.842
1	1.764	10	1.124	2	0.838
2	1.743	3	1.113	10	0.834
70	1.721	2	1.108	2	0.829
50	1.695	10	1.101	5	0.824
60	1.671	15	1.095	1	0.817
50	1.638	20	1.067	5	0.812
20	1.609	1	1.055	10	0.807
10	1.602	1	1.048	3	0.797
10	1.580	15	1.041	5	0.794
10	1.544	10	1.032	Edge	0.773
10	1.499	1	1.022		
5	1.456	1	1.012		

TABLE 9. X-RAY DIFFRACTION DATA ON UO_2HAsO_4

Intensity	Spacing, *d* (A)	Intensity	Spacing, *d* (A)	Intensity	Spacing, *d* (A)
0		50	1.786	20	1.120
Edge	21.24	40	1.748	1	1.113
100	8.81	10	1.699	5	1.107
80	5.54	3	1.681	10	1.097
40	5.04	60	1.660	3	1.093
50	4.38	30	1.642	2	1.082
90	3.73	30	1.611	10	1.071
70	3.57	30	1.598	5	1.061
90	3.30	80	1.574	5	1.042
3	3.13	20	1.492	10	1.035
50	2.99	10	1.463	10	1.006
1	2.93	20	1.437	10	1.002
1	2.86	30	1.409	1	0.998
20	2.76	50	1.387	1	0.992
50	2.70	30	1.359	10	0.984
40	2.58	30	1.334	2	0.977
50	2.53	10	1.311	10	0.959
50	2.42	2	1.292	15	0.944
1	2.36	20	1.285	3	0.931
40	2.29	20	1.270	15	0.918
40	2.25	20	1.263	10	0.895
50	2.19	20	1.250	10	0.876
50	2.16	10	1.235	3	0.868
60	2.09	20	1.229	10	0.862
60	2.01	20	1.217	5	0.848
1	1.979	5	1.209	5	0.833
40	1.931	40	1.181	2	0.829
1	1.901	10	1.165	3	0.822
3	1.868	1	1.150	Edge	0.773
20	1.846	5	1.135		
50	1.806	20	1.130		

equipment can be expected. Numerous runs were made on targets containing U^{235} and U^{238} by measuring intensity at fixed θ and plotting the line profile as a function of the angular setting of the spectrometer. Approximately 25 intensity measurements were used for each run, and at least five runs were made for each of the two isotopes (see Fig. 10).

Peak positions were determined for each line, and it is concluded that no measurable isotope shift exists. The limit of observable effect for these lines is estimated to be 1 v or about one-twentieth of the line half-width.

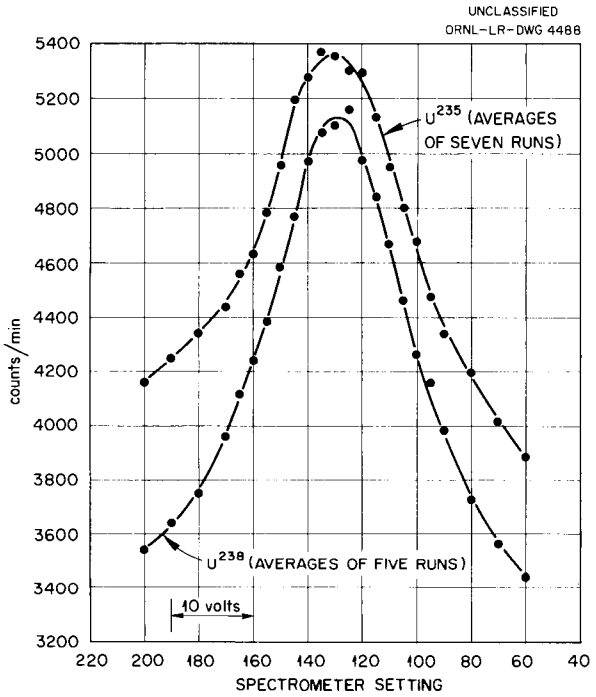

Fig. 10. Line Profiles of U L_{β_3} for U^{235} and U^{238}. Since background corrections could not be made, slight differences in line shape are not considered to be significant.

Intensity changes resulting from changing the U^{233} target conditions did not permit the collection of reliable U^{233} data, but it can be said that no statistically significant displacement from U^{235} or U^{238} is observed.

Igo and Wertheim[36] have computed the effect to be expected on the "top-slice" model in which all the charge is on the nuclear surface. For the L_1 level and $\Delta A = 5\,(238 - 233)$, the expected splitting would be 0.70 v, whereas for a uniform volume distribution of charge the theory gives 0.47 v. On each nuclear model the theoretical shifts are less than the estimated precision of measurement of 1 v for this experiment.

PUBLICATIONS

Reports and papers in preparation or submitted for publication:

1. K. L. Vander Sluis and J. R. McNally, Jr., *Fabry-Perot Interferometer with Finite Apertures.*
2. H. W. Morgan and J. H. Goldstein, *The Microwave Spectrum and Molecular Structure of Vinyl Fluoride.*
3. H. E. Walchli, *A Table of Nuclear Moment Data, Supplement No. 2.*
4. J. R. McNally, Jr., *Source Requirements and Applications for High Resolution Spectroscopy.*
5. H. W. Morgan, P. A. Staats, and J. H. Goldstein, *The Infrared Spectra of Formyl Fluoride and Deuterated Formyl Fluoride.*
6. H. W. Dunn, *Analysis of the Rare Earths by X-Ray Fluorescence.*
7. G. L. Rogosa and W. F. Peed, "U L_1 X-Ray Transition from Separated Isotopes," submitted for publication in *The Physical Review.*
8. E. L. Grove and J. A. Norris, *A Study of Matrix Effects in a Graphite Base Semi-Quantitative Procedure.*

[36] G. Igo and M. S. Wertheim, *Phys. Rev.* 95, 1097 (1954).

MASS SPECTROMETER LABORATORY

Russell Baldock, Department Head

INTRODUCTION

The Mass Spectrometer Laboratory has continued its research on the development and application of high-precision analytical methods of analysis. Application has been made to problems of immediate Laboratory need as well as to those of long-range fundamental interest. The isotope-dilution method of analysis has been successfully applied to a variety of problems, including the following:

1. The percentage composition of uranium in reactor fuels and the subsequent burnup of U^{235} under irradiation has been measured to an accuracy of better than 1%.
2. The uranium composition of samples of water from the Gulf of Mexico and the Atlantic ocean has been measured to be, respectively, 3.5×10^{-9} and 3.2×10^{-9} g of uranium per gram of water.
3. Data that will improve the calculations of the half life and the total neutron cross section of Cs^{135} have been obtained.
4. The upper limit of the occurrence of Tc^{98} in a molybdenum ore concentrate has been set at one part in 10^{11}.

ISOTOPE-DILUTION METHOD OF ANALYSIS

J. R. Sites — C. F. Harrison
L. O. Gilpatrick — H. M. Rosenstock

The isotope-dilution method has been used during the last one and one-half years to analyze ARE fuels for their uranium content.[1] As a result of this experience it was decided that the accuracy of the method should be studied further, and a testing program was therefore inaugurated. An enriched sample of U_3O_8 containing 99.86 at. % U^{235} and 0.07 at. % U^{238} was obtained from B. Harmatz.[2] This material was chemically purified for use as a standard, and the isotope ratio was carefully determined. The material was then dissolved in nitric acid and diluted to make a standard stock solution. Small portions of this solution were put through the normal ether extraction process used for extracting uranium from ARE fuel samples. Any change of isotopic composition was attributed to contamination by natural uranium present in reagents and glassware. The observed uranium contamination in these blanks was less than 0.15 μg per sample, as shown in Table 10. These results show that normal uranium contamination during chemical separations of fuel uranium is negligible for the usual fuel samples which exceed 500 μg of uranium.

The second test of the isotope-dilution method verified the concentration of the standard solutions, the accuracy of the spiking, and the reliability of the mass spectrometer. Known mixtures of normal- and enriched-uranium solutions were examined in the mass spectrometer, and the results were compared with values for the expected U^{235} concentrations. Table 11 shows that the greatest difference between calculated percentages and measured percentages is only 0.65% and is usually considerably less.

[1] L. O. Gilpatrick and J. R. Sites, *Stable Isotope Research and Production Semiann. Prog. Rep. May 20, 1954*, ORNL-1732, p 24–26.

[2] B. Harmatz, H. C. McCurdy, and F. N. Case, *Catalog of Uranium, Thorium, and Plutonium Isotopes*, ORNL-1724, Special, p 2 (May 19, 1954).

TABLE 10. URANIUM CONTAMINATION IN BLANKS

Sample	Original U^{238} (%)	Final U^{238} (%)	Sample Uranium Weight ($\times 10^{-6}$ g)	Additional Normal Uranium Found ($\times 10^{-6}$ g)
792-U	0.069 ± 0.005	0.084 ± 0.016	773	0.12
793-U	0.069 ± 0.005	0.070 ± 0.004	941	0.00
844-U	0.069 ± 0.005	0.20	106.0	0.14
845-U	0.069 ± 0.005	0.20	102.8	0.15

TABLE 11. COMPARISON OF EXPERIMENTAL AND THEORETICAL URANIUM VALUES

Sample	W_1,* U^{235} (mg)	W_2,* U^{238} (mg)	U^{235} Calculated (%)	U^{235} Measured (%)	Difference, Calculated Minus Measured
860-U	2.203	16.93	12.25	12.01 ± 0.07	0.24
813-U	0.4132	2.055	17.48	17.10 ± 0.20	0.38
859-U	6.707	15.48	30.95	31.03 ± 0.18	–0.08
814-U	0.7794	1.254	39.02	38.96 ± 0.26	0.06
858-U	10.45	11.05	49.24	49.44 ± 0.09	–0.20
815-U	1.189	0.8465	58.95	59.60 ± 0.23	–0.65
857-U	15.84	6.572	70.61	70.94 ± 0.20	–0.35
816-U	3.198	0.8734	78.84	79.23 ± 0.18	–0.39
856-U	18.29	2.038	90.09	90.62 ± 0.08	–0.53
				Av error	0.37

*W_1, U^{235} = 99.86 at. %, U^{238} = 0.07 at. %; W_2, U^{235} = 0.72 at. %, U^{238} = 99.28 at. %.

TABLE 12. ANALYSIS OF STANDARD ARE FUEL

Sample	Weight (mg)	Method of Analysis		Difference, Dilution Minus Chemical (%)
		Chemical	Dilution	
867-U	8.902	8.86	8.91	0.6
877-U	9.170	8.86	8.98	1.4

The isotopic-dilution analysis was then applied to a thoroughly ground standard ARE fuel containing enriched U^{235}. The results are shown in Table 12.

The results of this study show the isotopic-dilution method to be reliable and capable of good results under the conditions which have been used for ARE fuel analysis.

URANIUM IN SEA WATER

L. O. Gilpatrick C. F. Harrison
E. Rona[3]

Sea water has, until recently, been analyzed for its uranium content by the method of fluorescence.[4] Some of the newer methods of analysis are of interest since they give hope of determining the very small amounts of uranium involved with much better accuracy than that obtainable heretofore. Stewart and Bentley have applied the method of fission-fragment counting to the problem of sea-water uranium analysis with excellent results.[5] Their analysis, however, gives values which are in excess of those reported in earlier works.[6,7] Isotopic-dilution analysis, another method of high sensitivity for the analysis of trace quantities of uranium, has been applied to the very small

[3]Joint project with E. Rona of Oak Ridge Institute of Nuclear Studies.

[4]F. Herregger and B. Karlik, *Sitzber. Akad. Wiss. Wien, Math-naturw. Kl. Abt. IIa* 144, 217 (1935).

[5]D. C. Stewart and W. C. Bentley, *Recovery of Heavy Elements from Sea Water. II. A New Method of Uranium Analysis*, ANL-5155, p 1–16 (Nov. 1953).

[6]E. Föyn, B. Karlik, H. Pettersson, and E. Rona, *Göteborgs Kgl. Vetenskaps- Vitterhets-Samhäll Handl. Ser. B*, 6, 12 (1939).

[7]G. Koczy, *Sitzber. Akad. Wiss. Wien, Math-naturw. Kl. Abt. IIa*, 158, 113 (1950).

amounts of uranium found in minerals and meteorites.[8] This method has not previously been applied to the sea-water problem.

Application of the isotopic-dilution method to sea-water uranium analysis was begun in July 1954; Gulf of Mexico waters were used in this analysis. The first efforts were directed toward selecting a good extracting reagent for uranium and measuring its efficiency. Di-(ethylhexyl) monohydrogen phosphate proved to be nearly 100% efficient in removing low-concentration U^{233} tracer from raw sea water. The extraction was accomplished by shaking the solution for 30 min in the volume ratio of 100 to 1. Uranium is easily back-washed from the organic phosphate with $(NH_4)_2CO_3$ solution and can be concentrated to one drop of nearly pure $UO_2(NO_3)_2$. The enriched-uranium spike solution used in this study was 99.94 at. % U^{235} and was added to the sea water in the amount of 14.4 μg. With 3-liter samples of sea water the expected amount of ocean uranium is of the order of 10 μg. The resulting 25-μg mixture of uranium isotopes was examined in the mass spectrometer by measuring the thermal ions of UO_2^+ produced on a tantalum filament at temperatures in excess of 1500°C. Preliminary values from the waters of the Gulf of Mexico and the North Atlantic yield concentrations of uranium equal to about 3.5×10^{-9} and 3.2×10^{-9} g per gram of sea water, respectively.

INVESTIGATION OF ARE FUELS

L. O. Gilpatrick J. R. Sites
J. K. Gladden[9]

The analysis of ARE fuel capsules has continued, with two capsules of the third series having been analyzed. In this series, duplicates of the A and B drillings were spiked, and a sample of each drilling was retained unspiked for isotopic-abundance measurements. In order to minimize moisture pickup and oxidation effects, all weighings of the spiked samples were made within 24 hr of the time the capsule was opened. The results, calculated by using previously developed formulas,[10] are shown in Table 13. The original composition of the fuel was 9.20 wt % uranium.

Since the reliability of the isotope-dilution method of analysis of uranium in the ARE fuels has been fully established as described in a previous section (see "Isotope-Dilution Method of Analysis"), the wide variations in the data presented in Table 13 are not introduced by the

[8] D. C. Hess, H. Brown, M. G. Inghram, C. Patterson, and G. Tilton, "Measurement of Trace Quantities of Uranium and Lead in Minerals and Meteorites," in *Mass Spectroscopy in Physics Research*, U.S. Department of Commerce, NBS Circular 522, 1953, p 183.

[9] Consultant, Georgia Institute of Technology.

[10] L. O. Gilpatrick and J. R. Sites, *Stable Isotope Research and Production Semiann. Prog. Rep. May 20, 1954*, ORNL-1732, p 24.

TABLE 13. SUMMARY OF BURNUP DETERMINATIONS

Sample	Uranium Left (%)	Burnup (from Uranium Lost) (%)	U^{234}	U^{235}	U^{236}	U^{238}	Burnup (from Percentage of U^{236}) (%)
239 A	8.57	6.85					
	8.71	5.33					
			0.93	91.53	1.27	6.28	6.6
239 B	8.93	(2.93)					
	8.65	5.98					
			0.93	91.54	1.28	6.26	6.6
244 A	6.56	28.70					
	6.43	30.11					
			1.10	85.56	5.72	7.66	24.1
244 B	6.67	27.50					
	6.89	25.11					
			1.07	85.67	5.58	7.69	23.7

Mass Spectrometer Laboratory but must be attributed to other causes.[11]

URANIUM-BURNUP MEASUREMENTS (PRATT & WHITNEY FUEL ELEMENTS)

L. O. Gilpatrick J. R. Sites
C. F. Harrison

The uranium burnup during neutron irradiation of stainless-steel-clad fuel elements was measured by the method described previously.[1] Roger Hawkins of Pratt & Whitney supplied two small unirradiated stainless-steel-clad packets filled with a compress of 70%, type 347 stainless steel powder and 30% enriched U^{235} as U_3O_8. These packets were controls for the burnup calculations. Two identical packets were irradiated in the MTR for several hundred hours. These irradiated packets were then dissolved in aqua regia and diluted. Two aliquots from each irradiated packet were examined for uranium burnup by the isotope-abundance change method as measured directly in the mass spectrometer. Calculations of the results are based on previously developed formulas.[1] The results, plus some additional values for comparison, are given in Table 14.

[11] M. T. Robinson and G. W. Keilholtz, *ANP Quar. Prog. Rep. Sept. 10, 1954*, ORNL-1771, p 136.

[12] G. W. Parker *et al.*, *Chem. Semiann. Prog. Rep. June 20, 1954*, ORNL-1755, p 33.

[13] R. Baldock *et al.*, *Stable Isotope Research and Production Semiann. Prog. Rep. Nov. 20, 1953*, ORNL-1617, p 10.

DETERMINATION OF CESIUM-135 CONCENTRATION

J. R. Sites

Some of the xenon collected from above the HRE fuel was held until part of the Xe^{135} decayed into Cs^{135}. An aliquot of a solution of this cesium as CsCl was used[12] to determine more accurately the half life of Cs^{135}. Another aliquot is being used to determine the total neutron cross section of Cs^{135}. The isotopic-dilution technique has been used to determine the concentration of cesium in the CsCl solution. The formula previously developed for application to some uranium dilution work has been modified for this particular cesium problem.[13,14] If Y is defined as the weight fraction of cesium in the sample, then in this case it is equal to unity provided that the solution of both the sample and the spike are pure and of the same compound. It also follows that no gravimetric factors are needed.

$$Y = 1 = \frac{C_2 V_2}{C_1 V_1} \times \frac{M_1}{M_2} \left[\frac{A_2^{133} - (R \times A_2^{135})}{(R \times A_1^{135}) - A_1^{133}} \right],$$

where

R = ratio of ion peaks, 133/135,

C_1 = concentration of cesium in sample,

[14] L. O. Gilpatrick and J. R. Sites, *Stable Isotope Research and Production Semiann. Prog. Rep. May 20, 1954*, ORNL-1732, p 26.

TABLE 14. URANIUM BURNUP BY ISOTOPE-ABUNDANCE METHOD*

Sample	Ratio U^{235}/U^{238}	Atom %				Burnup (%)		
		U^{234}	U^{235}	U^{236}	U^{238}	Isotope Method	Flux Method	Cesium Method
Control A	16.76 ± 0.17	1.03 ± 0.01	93.40 ± 0.05		5.57 ± 0.06			
Control B	16.92 ± 0.57	0.98 ± 0.03	93.49 ± 0.17		5.54 ± 0.18			
Average	16.84	1.00	93.45		5.55			
1-6-A	15.37 ± 0.19	1.05 ± 0.01	92.08 ± 0.98	0.081 ± 0.022	5.99 ± 0.07	8.14	6.14**	4.1**
1-6-B	15.42 ± 0.58	1.12 ± 0.05	92.02 ± 0.15	0.888 ± 0.018	5.98 ± 0.13	7.85		
1-7-A	15.36 ± 0.22	1.05 ± 0.02	91.89 ± 0.09	1.08 ± 0.01	5.99 ± 0.08	8.18	7.06**	5.0**
1-7-B	15.38 ± 0.37	1.07 ± 0.01	91.88 ± 0.15	1.08 ± 0.03	5.98 ± 0.13	8.06		

*The limits of error apply to the 95% confidence interval of statistical variation for measured values.

**These values were supplied for comparison by Roger Hawkins of Pratt & Whitney for whom the work was performed.

V_1 = volume of sample taken,

M_1 = molecular weight of cesium in sample,

A_1^{133} = abundance of Cs^{133} in sample,

A_1^{135} = abundance of Cs^{135} in sample,

C_2 = concentration of cesium in spike, etc.

Table 15 gives the abundance and molecular-weight data for this spike and sample. The concentration of cesium in the spike solution is 66.5 μg/ml. Several different volume ratios of spike to sample were made to set a smaller limit of error on the concentration in the sample.

TABLE 15. ABUNDANCE AND MOLECULAR WEIGHT

	A^{133} (%)	A^{135} (%)	M
Spike	100.0	0	132.91
Sample	78.21	21.79	133.25

The working equation is then

$$C_1 = 66.5 \times \frac{V_2}{V_1} \times \frac{133.25}{132.91} \left(\frac{100 - 0}{21.79R - 78.21} \right) \quad ;$$

$$C_1 = \frac{V_2}{V_1} \; \frac{6667}{21.79R - 78.21} \quad .$$

The total cesium is given by C_1, and the Cs^{135} content is 21.79% of C_1. The limit of error is for the 95% confidence interval. Errors are introduced in determining the isotopic abundance in the sample, in determining the initial concentration of the spiking solution, in pipetting the solutions, and in measuring the ratios of the ion peaks. The mass spectrometric data are good to 0.5 to 0.8%. This, combined with other errors, gives an estimated error close to that indicated in Table 16, that is, about 2.5% of the value found for the concentration.

It might be noted that the spiking in this case has been in a most unfavorable direction. That is, the spike increased the abundance of the mass already most abundant.

The samples were furnished by G. W. Parker, Chemistry Division.

DETERMINATION OF MICROGRAM QUANTITIES OF TECHNETIUM

J. R. Sites L. O. Gilpatrick
G. E. Boyd[15]

To date, there has been no evidence of technetium occurring in nature. It has been postulated that, if it does occur in nature, the isotope of mass 98 would most likely be present in certain molybdenum ores. The isotopic-dilution method was chosen as the best technique for determining the existence of a microgram or less of technetium in some ore concentrates. To determine the operating characteristics of a microgram of technetium metal in a mass spectrometer, several blank runs were made with ammonium pertechnetate (NH_4TcO_4). A measured amount of the solution was evaporated on an iridium[16] filament and reduced to the metal in a hydrogen atmosphere. This was accomplished

[15] Assistant Research Director.

[16] H. M. Rosenstock and J. R. Sites, *Stable Isotope Research and Production Semiann. Prog. Rep. May 20, 1954*, ORNL-1732, p 21.

TABLE 16. RESULTS OF CONCENTRATION DETERMINATION

Sample No.	V_2/V_1	R (133/135)	C_1 (μg/ml)	Concentration of Cs^{135} (μg/ml)
0		3.59		
1	1.00	6.92	91.86	20.02
2	2.00	10.31	91.06	19.84
3	1.50	8.51	92.15	20.08
4	0.50	5.35	86.88	18.93
5	0.66	5.84	89.73	19.55
6	0.25	4.46	87.86	19.17
			Av	19.60 ± 0.47

by placing the loaded filament and its holder in a small glass chamber through which hydrogen could flow. The glass chamber was placed under a low-power microscope so that the progress of the reduction could be watched. It was observed that just below a dull-red heat the dried white crystals turned to a silvery-gray crust. After loading the sample into the mass spectrometer, thermal ions of Tc^{99} were recorded at about 2000°C.

Approximately one-half of a molybdenum ore concentrate which had been spiked with 5 μg of Tc^{99} was carefully evaporated on a new iridium filament. It was necessary to apply only one-third of the liquid at a time because of the high concentration of $(NH_4)_2SO_4$. After each of the first two applications the filament temperature was slowly raised in the flowing hydrogen atmosphere until only a dry brownish crust was left on the center of the filament. After the third evaporation the filament temperature was increased until at red heat the crust turned silvery gray. This temperature was then maintained for about 5 min, following which the sample was loaded into the mass spectrometer. Thermal ions of technetium and molybdenum were seen.

The intensity of the ion peak at mass 98 was not modified with respect to the rest of the molybdenum isotopic pattern; therefore no Tc^{98} was found. For the particular ore used, the upper limit for the occurrence of technetium is one part in 10^{11}.

STABLE ISOTOPE ANALYSES

J. R. Walton

Fifty-seven calutron-enriched isotope samples, received from the Stable Isotope Calutron Operations and Separation Research Department, were analyzed in the new all-metal mass spectrometer (MS-C). These samples were composed of 15 different elements. The elements and compounds used and the ions measured during the analyses are shown in Table 17. Rapid solid-sample analyses techniques, previously described,[17] were successfully employed in the analyses of 35 of the 57 samples. Listed below are the compounds that were loaded on tantalum or iridium ovens and examined in the order of decreasing volatility: NiO, Sm_2O_3, Pt, TiO_2; NiO, Pt, TiO_2; Fe_2O_3,

[17] H. M. Rosenstock, J. R. Sites, and J. R. Walton, *Stable Isotope Research and Production Semiann. Prog. Rep. May 20, 1954*, ORNL-1732, p 22.

TABLE 17. IONS MEASURED IN STABLE ISOTOPE ANALYSES OF VARIOUS ELEMENTS AND COMPOUNDS

Atomic No.	Element	Compound	Oven	Ions Measured	
				Thermal	Electron-Produced
3	Lithium	Li_2SO_4	Ta		Li^+
14	Silicon	SiO_2	Ir		SiO^+
17	Chlorine	NaCl, AgCl	Ta		Cl^+, HCl^+
20	Calcium	CaI_2	Ta		CaI^+
22	Titanium	TiO_2	Ta	TiO^+	
24	Chromium	Cr_2O_3	Ta	Cr^+	
26	Iron	Fe_2O_3	Ta		Fe^+
28	Nickel	NiO	Ir		Ni^+
60	Neodymium	Nd_2O_3	Ta	NdO^+	
62	Samarium	Sm_2O_3	Ta	Sm^+, SmO^+	
64	Gadolinium	Gd_2O_3	Ta	Gd^+, GdO^+	
72	Hafnium	HfO_2	Ta		HfO^+
77	Iridium	Ir	Ta		Ir^+
78	Platinum	Pt	Ta		Pt^+
82	Lead	PbO	Ta		Pb^+

Nd_2O_3; AgCl, Nd_2O_3; Fe_2O_3, Gd_2O_3; Gd_2O_3, TiO_2; PbO, Nd_2O_3; Nd_2O_3, HfO_2; Sm_2O_3, HfO_2.

ISOTOPIC ANALYSIS OF BORON

C. E. Melton Russell Baldock

A highly satisfactory method of isotopic analysis of boron with the use of boron trifluoride, BF_3, as the sample gas has been developed in which the G-E analytical mass spectrometer (MS-B) is utilized.

The major difficulty encountered was "memory," a term used to describe the interference with, or contribution to, an analysis by residual gases or compounds from previous samples which remained when the samples were pumped out of the mass spectrometer at the completion of the analyses.

Boron trifluoride gas containing 96% B^{10} was used to study the effect of memory. It was found that the following procedure gave the correct isotopic analysis of the enriched boron gas. A portion of the gas was introduced into the gas-handling system and allowed to remain for 5 min before it was pumped out in the normal manner. Each time a sample was introduced, a measure was made of the isotopic abundance. This procedure was repeated for five times before the final analysis of the isotopic abundance was made.

The same procedure was then repeated on boron trifluoride consisting of the natural isotopic abundance. It was found that, after the fifth successive introduction and pumping out of the sample, the mass spectrometer had been completely conditioned against any interference from the previous enriched samples. This procedure has been adopted for all analyses.

A second problem arose because the d-c amplifier on the mass spectrometer (MS-B) was unstable and not sufficiently sensitive for high-precision analyses. These difficulties were readily overcome by replacing the d-c amplifier with a vibrating-reed electrometer.

With the use of the above techniques and electrical circuitry, it is possible to obtain analyses on a given sample under different circumstances and on different days which will agree to within 1 part in 10,000.

[18] Stable Isotope Research and Development Department.

[19] R. Reisz and G. H. Dieke, *J. Appl. Phys.* 25, 196 (1954).

A STUDY OF THE DIRECT-CURRENT DISCHARGE WITH A MASS SPECTROMETER

C. E. Melton H. B. Greene[18]

The components of a rare-gas mixture in a gas discharge were studied by means of a mass spectrometer. The cathode end of a d-c discharge tube was connected to the sample system of a modified G-E mass spectrometer (MS-B). This greatly simplified the procedure. The discharge tube was filled to a pressure of 33.6 mm Hg with commercial helium containing approximately 2 ppm of neon.

A d-c discharge was maintained through the gas for 2 hr at a current of 25 ma and a difference of potential of 1020 v. The He/Ne ratio of the cathode and anode gas was then determined on the mass spectrometer. Results from this analysis are shown below:

	Anode End	Cathode End
Parts He	111,500	191,250
Parts Ne	5 ± 1	None detected*

*Measuring less than 1 part in 200,000.

Radio-frequency noise which may have been generated in the discharge did not produce any interference in the detection or amplification circuits used to measure the ion current.

These results qualitatively confirm those of Reisz and Dieke,[19] who determined concentration changes by measuring changes in the intensity of a number of lines in the neon spectrum.

AIRCRAFT REACTOR LEAK TEST

C. E. Melton Russell Baldock
W. R. Rathkamp

The fuel lines and reactor core for the ARE project have been leak tested with a mass spectrometer by using special techniques. Customary methods of leak detection could not be employed for the following reasons: The leak test had to be carried out with the reactor at approximately 1200°F, and the reactor could not be evacuated at this elevated temperature because of the danger of damage produced by oxidation if a leak should develop.

The method consisted in analyzing the annulus gas, which contained helium, for krypton which might have leaked from the reactor core and fuel lines. Krypton was chosen to fill the reactor core

and fuel lines because its abundance in air is 1 ppm and any leakage of air into the annulus or sampling system would have had little effect on the analysis. The differential pressure between the annulus and fuel line averaged 2 psig.

The sensitivity of the mass spectrometer (MS-B) for small quantities of krypton in helium was established by examining mixtures of known composition ranging from 1 part of krypton in 1000 parts of helium down to 1 part of krypton in 10 million parts of helium.

During the reactor leak test, krypton was first detected in the annulus 7 hr after it had been introduced into the reactor core and fuel lines. Since the volume of the reactor core, fuel lines, and annulus was known, as well as the time, an equivalent diameter for the leak could be calculated, assuming viscous flow and the presence of only one leak. The equivalent diameter of the leak was calculated[20] to be 0.001 in. The time rate of decrease in pressure on the reactor gage provided an independent calculation, which yielded an equivalent diameter of 0.003 in.

However, the decrease in gage pressure and the detection of krypton in the annulus after 7 hr did not necessarily imply that there was a leak in the portion of the reactor fuel system that was covered by the annulus. Pressure tests made prior to this investigation had indicated that small leaks existed in a portion of the fuel system which was not covered by the annulus. Thus it was possible for krypton to escape by means of these leaks and to diffuse ultimately into the annulus and be detected in samples taken at a later time.

ION-BEAM MEASURING TECHNIQUE

G. F. Wells

The receiver amplifier for the G-E mass spectrometer (MS-B) was replaced with a vibrating-reed electrometer, and a technique was developed for measuring ion beams whose amplitudes differ by a ratio of 10^7 to 1. This was done in connection with the problem of leak testing the aircraft reactor (see "Aircraft Reactor Leak Test"). The technique consists in mounting a 10^8-ohm resistor, a 10^{11}-ohm resistor, and an auxiliary vibrating-reed shorting switch in the input circuit of the vibrating-reed electrometer as shown in Fig. 11. In operation both resistors contact the input lead. The ground side of the 10^8-ohm resistor is switched to place it in parallel with the 10^{11}-ohm resistor.

With this arrangement an ion beam of 1×10^{-15} amp would develop 0.1 mv across the 10^{11}-ohm resistor, while a beam of 1×10^{-8} amp would develop 1.0 v across the two resistors in parallel. This gives a measurable current ratio of 10^7 to 1.

Further extension of this technique is limited for use with the mass spectrometer. The lower limit for measurement of weaker beams is set by the *RC* time constant of the vibrating-reed input circuit, which becomes excessively long when resistors greater than 10^{11} ohms are used. The upper limit for measurement of stronger beams is fixed by the present inability of the mass spectrometer to produce and transmit homogeneous ion beams of larger amplitude than 10^{-8} amp.

ROTATING RECEIVER

W. R. Rathkamp

The resolution of the 8-in.-radius, 60-deg-sector mass spectrometer (MS-A) has never approached the theoretical value attainable on such a machine. It was thought that lack of parallelism between the receiver entrance and source exit slits contributed to the poor resolution; therefore, to correct this, a convenient method for rotating the receiver slit without interrupting mass-spectrometer operation was devised (Fig. 12).

The receiver assembly was mounted on the rear closing plate by means of an extension tube. Four ears, large enough to envelop the rear flange, were welded to the rear closing plate, and a bracket carrying two jackscrews was welded to the rear flange to permit the screws to push against one of these ears. When the jackscrews were turned, the rear closing plate could be slid under the bolt heads so that it was in continuous contact with the Teflon gasket; thus a closely controlled rotation was achieved without breaking the vacuum seal. The resulting slit rotation led to improved resolution.

SLIT-WIDTH ADJUSTMENT

W. R. Rathkamp

The receiver slit-width adjustment on MS-A initially consisted of one slit element which moved in slide ways as a result of a finely threaded screw being turned. The screw was attached to an

[20] These calculations are treated more fully in a report which is now in preparation.

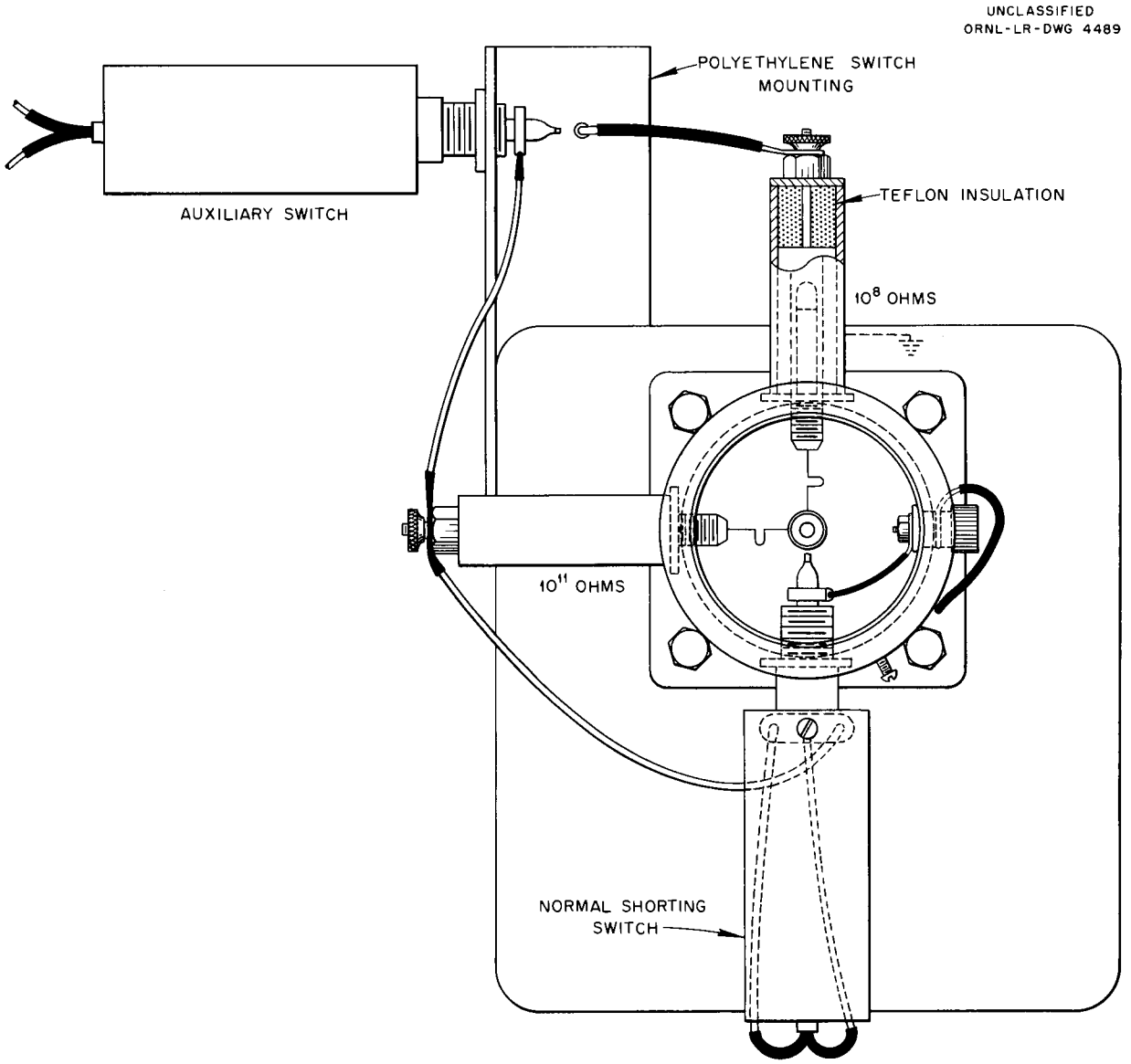

Fig. 11. Modified Vibrating-Reed Preamplifier.

iron armature which was to be turned by rotating a small magnet placed outside the spectrometer. It was found that occasional binding of the system prevented the armature from following the external magnet. Also, the slide mechanism did not maintain the slit edges parallel.

These difficulties were eliminated by the following modifications: The slide ways were removed and the moving slit element was mounted on a long, thin metal plate (see Fig. 12). Flexing of this plate changed the slit width without friction and without disturbing the parallelism of the slit edges. The plate was flexed by means of a ¼-in. 80 NS screw operating through a bellows, the spring of the plate being sufficient to keep it in contact with the screw when the slit was opened.

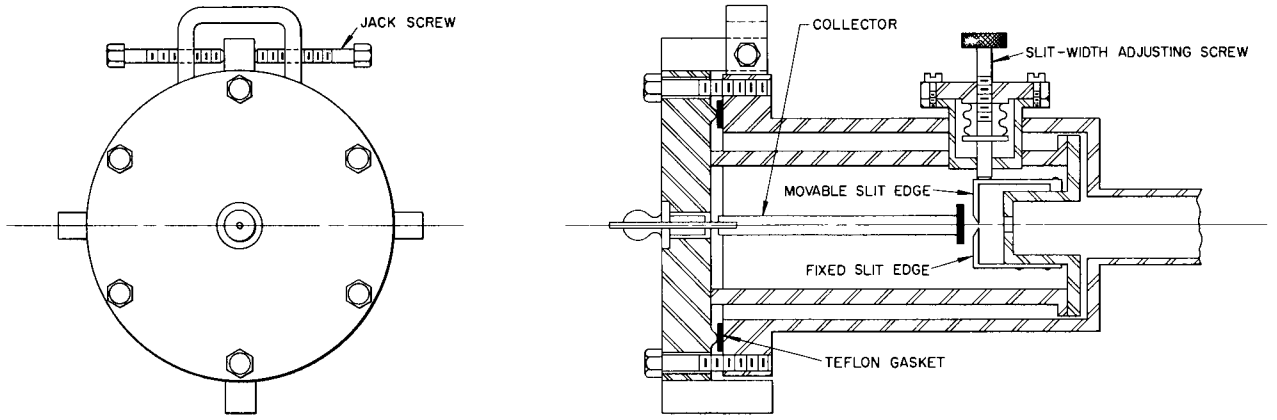

Fig. 12. Rotating Receiver with Adjustable-Width Slits.

STABLE ISOTOPE SEPARATION RESEARCH AND CALUTRON OPERATIONS

C. E. Normand, Department Head

INTRODUCTION

The stable-isotope separation program has been strongly influenced during the past six months by the present need and anticipated future requirements for multigram quantities of certain enriched isotopes. Since the isotopes of interest are often of low natural abundance (e.g., Cr^{54}, 2.38%; Fe^{58}, 0.31%; Ca^{46}, 0.0033%), the enrichment of these isotopes in multigram quantities requires the processing of several times the amount of material usually treated in a single production series. Making the transition to this larger scale of production has resulted in an extending of the production series over longer periods of time and a consequent reduction in the number of elements processed. The transition has also led to extensive development of large-scale ion sources and receivers designed to increase isotope production rate. To increase the total isotope output still further, it is being proposed that present production be expanded by either or both of the following means: (1) increase from two to four the number of 48-in.-radius separators; (2) extend operation from the current five days per week to a continuous seven days per week.

ISOTOPE COLLECTIONS

Five elements (Ni, Fe, Cr, Ca, Rb) were processed during the past six-month period, and the isotopes of a sixth element (Cu) were collected as strong side-band beams during the collecting of nickel. All collections were made by operating personnel under the direction of R. L. Caldwell, G. J. Fisher, and K. A. Spainhour.

Nickel (and Copper), Series GT-XBX

Collection of the isotopes of nickel (Ni^{58}, Ni^{60}, Ni^{61}, Ni^{62}, Ni^{64}), together with the Cu^{63} and Cu^{65} side bands, was completed on June 18. Equipment and operating parameters remained essentially as described in the preceding semiannual report.[1] Of the 70 runs comprising the series, 53 were terminated because of filament failure after an average run time of approximately 29 hr. Aside from short filament life the principal difficulties encountered were: (1) the depositing of material at the collimating slot, (2) erosion of the receiver faceplate by the Fe^{56} side-band beam, and (3) shorting of the receiver due to poor retention of the collected copper.

The average rate of production throughout the series was 67.1 ma of nickel and 18.9 ma of copper. Production was maintained for 1717 of the 2307 separator-hours devoted to the series. The following estimated weights, in grams, of isotopes were collected:

Ni^{58}	173.13
Ni^{60}	66.01
Ni^{61}	2.60
Ni^{62}	8.59
Ni^{64}	1.84
Total	252.17
Cu^{63}	53.38
Cu^{65}	23.46
Total	76.84

Iron, Series GU-XBX

Separation of the isotopes of iron (Fe^{54}, Fe^{56}, Fe^{57}, Fe^{58}) began on June 18 and continued until November 8. The primary aim of this series was the collection of a gram or more of high-purity Fe^{58} for use in the production of Fe^{59} by neutron irradiation in the ORNL reactor. Both equipment and operating procedures were essentially the same as those previously used in processing iron (series DL, 1950).

Anhydrous ferrous chloride charge was vaporized at 550°C in a medium-temperature source to which stainless steel heat shielding had been added. A deep arc chamber with floating anode and ¼-in. ion exit slit was used in most of the runs.

The standard-type ion receiver was modified somewhat to prevent contamination and assure high purity of the Fe^{58} product. The intense (91.68%) Fe^{56} beam passed through a ⅜-in. defining slit in the receiver faceplate into a graphite collector mounted on a water-cooled copper pad. All other beams were defined by ⅛-in. slits, and both the Fe^{54} and Fe^{57} beams were collected in water-

[1] C. E. Normand, *Stable Isotope Research and Production Semiann. Prog. Rep. May 20, 1954*, ORNL-1732, p 31.

cooled copper collectors so mounted that their front edges fitted against the receiver faceplate. The Fe^{58} collector was of purified graphite and was isolated from the other collectors by a graphite shield extending over its top and back surfaces. Because two of the collectors were grounded to the faceplate, ion currents were monitored on the Fe^{56} and Fe^{58} beams only.

Operation was generally smooth, but, as is always the case in processing iron, short filament life and the formation of iron deposits around the collimating and floating-anode slots led to short runs and relatively low innage. Moreover, the production rate was arbitrarily limited to about 80 ma, although twice this rate could have been obtained, because of severe erosion and poor retention at the Fe^{56} collector for currents in excess of this value.

A total of 4459 separator-hours was devoted to this collection series. Production was maintained during 3568 hr, or 80% of the time, at an average rate of 72.5 ma.

Following are the estimated weights, in grams, of the iron isotopes collected:

Fe^{54}	21.71
Fe^{56}	507.24
Fe^{57}	8.72
Fe^{58}	1.36
Total	539.03

Iron, Series GW-XBX

This series consisted of a single run made during the first week of November for the purpose of producing approximately a gram of Fe^{56} of 99.999% purity. In preparation for this one run, ten runs of series GU were performed as practice runs in which equipment and operating techniques were adopted.

In the actual collection run, $FeCl_2$ charge prepared from previously enriched (99.70%) Fe^{56} was used in a standard medium-temperature source that had added heat shielding. A nickel charge bottle, new source castings, and receiver carbons of purified graphite were used to avoid product dilution. The ion exit slit was $\frac{1}{8}$ in. wide, as was the Fe^{56} defining slit at the receiver.

The Fe^{56} collector was of purified graphite and was equipped with a center insert to permit selective recovery. The collector was mounted on a water-cooled copper pad to aid in heat dissipation. All other collectors were of copper and were mounted with their front edges fitting against the receiver faceplate in order to provide shielding of the Fe^{56} collector. The Fe^{54} defining slit was $\frac{1}{4}$ in. wide, and both the Fe^{58} and Fe^{57} collectors were placed behind a single $\frac{5}{8}$-in. slit.

The following operating conditions were established in preliminary runs and adhered to during the collection: (1) the total ion current was held to 25 ma, or less, to avoid excessive heating of the Fe^{56} collector, (2) the arc was maintained at high voltage and low current (1.5 to 2.0 amp) to prolong filament life, and (3) the charge temperature and support gas were adjusted to give optimum output at the above arc conditions.

At 25-ma output the Fe^{56} beam was sharply focused at the receiver, and the collector insert ran slightly incandescent. At this temperature appreciable material evaporated from the collector and was redeposited on the cooler outer surface of the Fe^{54} collector.

An estimated 1.44 g of Fe^{56} was received, and this material was recovered as three samples: (1) material from the center insert of the Fe^{56} collector, (2) material from the remainder of the collector, and (3) material redeposited outside the Fe^{54} collector.

Chromium, Series GS-XAX

Preliminary phases of this production series were treated briefly in the preceding semiannual report.[1] Mention was made of large-scale production tests run on various types of source units and of the ultimate development of a two-arc, high-temperature source of Alpha-2 size. This newly developed unit has been used in all production in the 48-in.-radius separators during the current half-year, and a full discussion of its development and operating characteristics is included in a separate section of this report.

Collection of the isotopes of chromium (Cr^{50}, Cr^{52}, Cr^{53}, Cr^{54}) was completed on July 29. The total time devoted to the series was 3407 separator-hours, including approximately 1000 hr of preliminary and experimental operation. Production was obtained during 2000 hr at an average rate of 85.1-ma ion current to the receiver.

The following estimated amounts, in grams, of the chromium isotopes were collected:

Cr^{50}	9.03
Cr^{52}	297.47
Cr^{53}	16.02
Cr^{54}	8.11
Total	330.63

Calcium, Series GV-XAX

Collection of the isotopes of calcium (Ca^{40}, Ca^{42}, Ca^{43}, Ca^{44}, Ca^{46}, Ca^{48}) was started about the first of August and is still in progress. The primary aim of this collection is the production of enriched Ca^{46} for conversion by (n,γ) reaction to 5-day Ca^{47} for use as a tracer element in biological research.[2] The initial production goal was set at 100 mg or more of Ca^{46} of 10% purity or better and having a Ca^{46} to Ca^{44} ratio of at least 10 to 1. Because of the very low natural abundance of Ca^{46} (0.0033%), this has been an extensive series even though high-production equipment has been used throughout.

The two-arc, high-temperature Alpha-2-type ion source operating with calcium metal charge in the 500 to 600°C temperature range has been used in most runs. The use of calcium iodide and calcium bromide charges in several early runs failed to indicate any superiority of these charge materials. Severe sparking, heavy electron drains, inadequate source-temperature control, and frequent breakage of accelerating-electrode bushings have persisted in a manner characteristic of past calcium operations. Modification of the drain system has led to some improvement but has not eliminated these difficulties. The substitution of stainless steel for graphite accelerating electrodes had little effect on performance.

The ions are collected in water-cooled copper pockets placed behind a graphite defining faceplate. In spite of extensive cooling applied to both the upper and the lower surfaces of the Ca^{40} pocket, severe erosion is caused by the large (97%) Ca^{40} ion beam, and retention is very poor. Poor retention leads to eventual grounding of the pocket by the deposition of rejected material on the back side of the faceplate.

[2]The $Ca^{46}(n,\gamma)Ca^{47}$ reaction was first considered; however, the $Ca^{48}(p,pn)Ca^{47}$ reaction may prove to be advantageous with the use of the 86-in. cyclotron.

A total of 3813 separator-hours has been used thus far in processing calcium. Production was obtained during 2448 hr at an average rate of 125.9-ma collected ion beams.

The following estimated amounts, in grams, of calcium isotopes have been collected to date:

Ca^{40}	453.70
Ca^{42}	1.57
Ca^{43}	0.93
Ca^{44}	3.87
Ca^{46}	0.31
Ca^{48}	0.73
Total	461.11

Rubidium, Series GX-XBX

Separation of the isotopes of rubidium (Rb^{85}, Rb^{87}) was started early in November and will continue through most of December in order to meet present requirements and replenish the inventory, which is totally depleted in these isotopes.

Rubidium iodide charge is used in a medium-temperature source with heat shielding. Operating temperature is approximately 600°C. Collection is in copper pockets placed behind ⅛-in. defining slits.

RESEARCH AND DEVELOPMENT

Some users of stable isotopes (e.g., those who use the isotopes in cross-section measurements and radioisotope production) indicate the need for separated material in larger quantities than would be available except following very extended collection periods, this being true especially of those isotopes low in natural abundance. Chromium-54 is an example that may be used to illustrate the point. This isotope constitutes 2.3% of natural chromium. Several grams were desired for the preparation of a cyclotron target for use in producing Mn^{54} by the reaction $Cr^{54}(p,n)Mn^{54}$.

Collection of Cr^{54} was started with the use of conventional Beta source units, and a developmental program was undertaken to modify an Alpha-2 source into a practical 600 to 800°C multiarc unit capable of high output to be used in the separation of Cr^{54} and various other isotopic species.

The modified unit is shown in Fig. 13; the Alpha-2 unit formerly used in the separation program is shown in Fig. 14. It will be noted that the major changes consist in (1) reduction in the

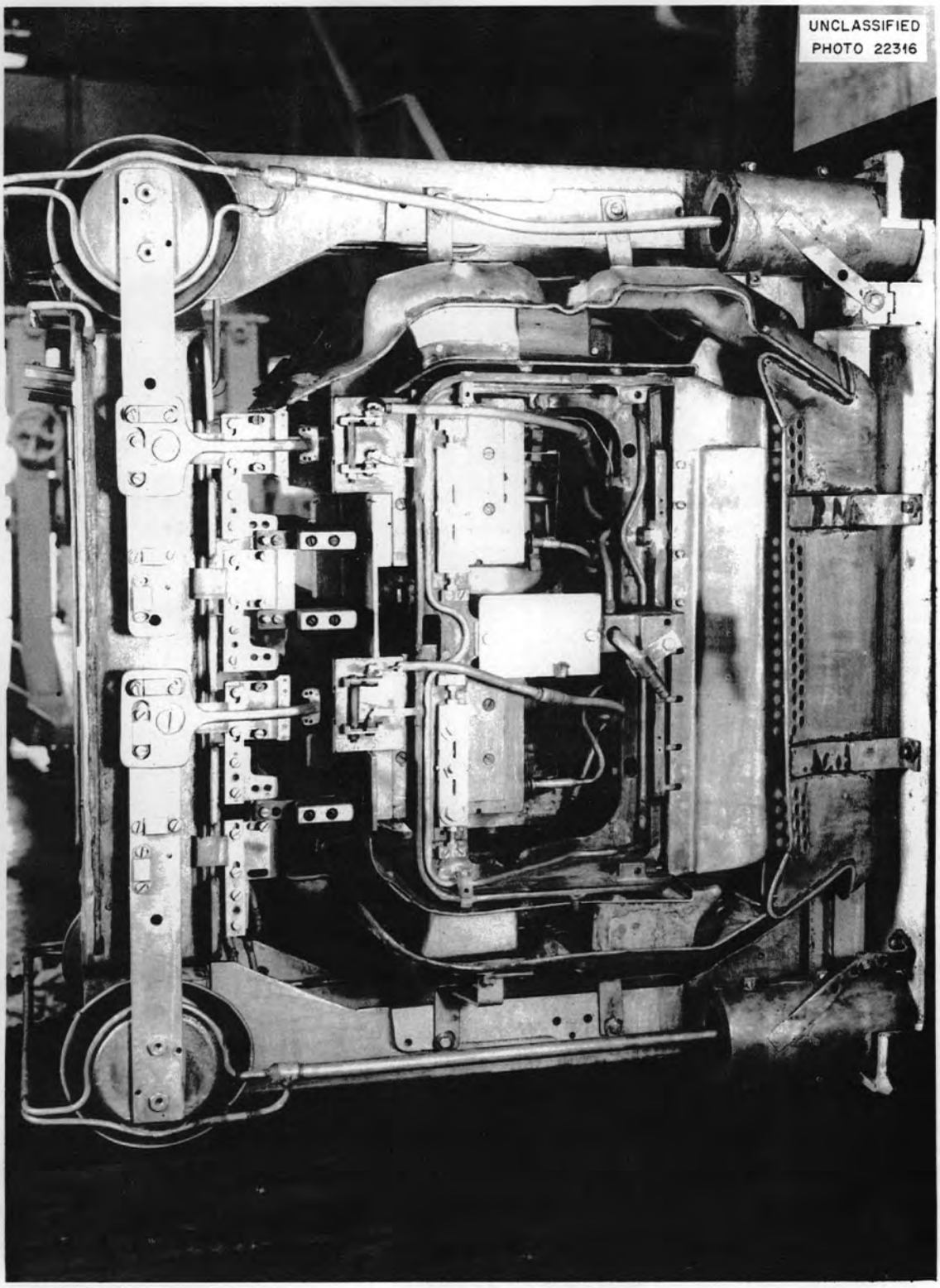

Fig. 13. Modified Alpha-2 Ion Source.

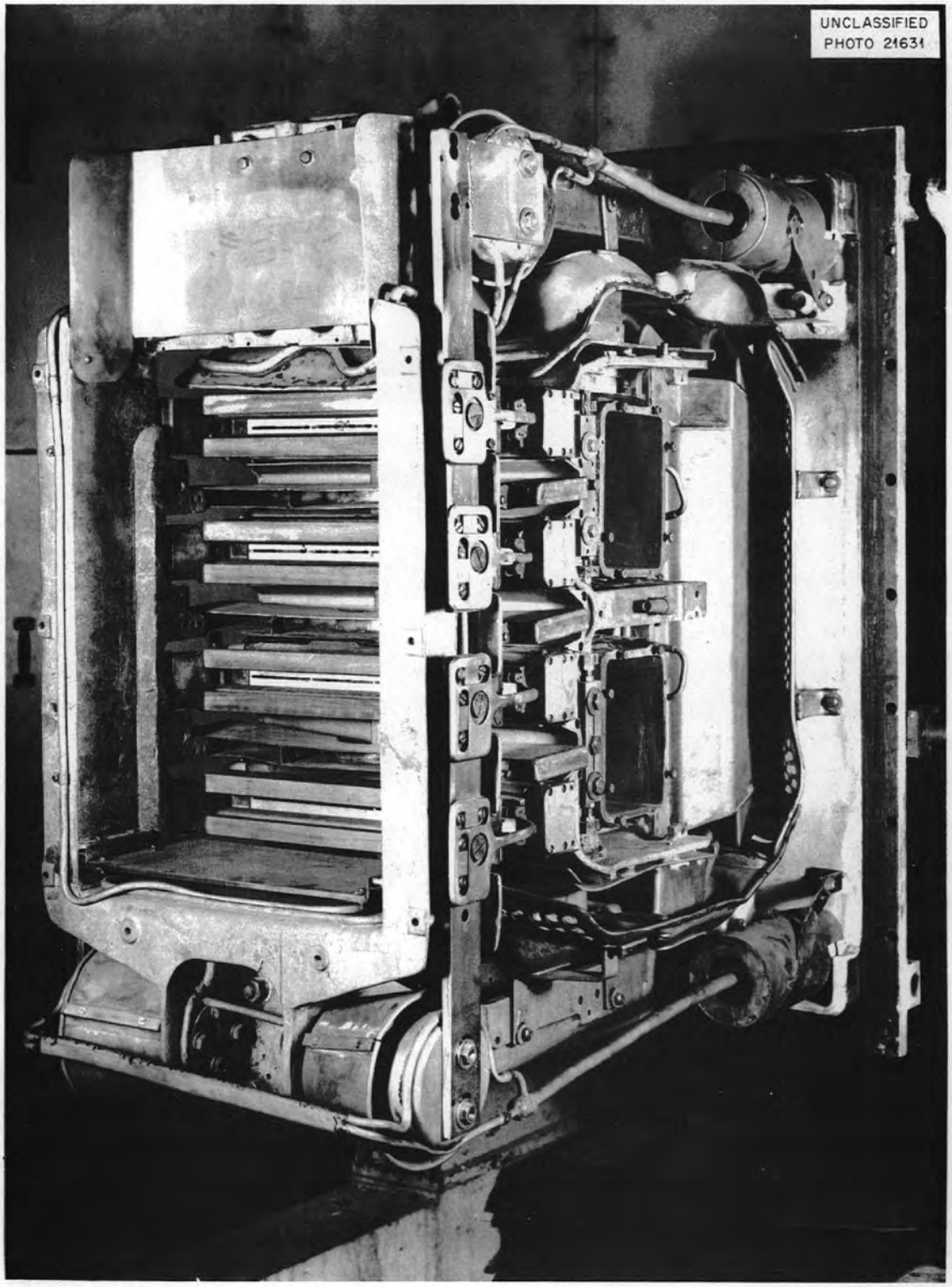

Fig. 14. Alpha-2 Ion Source.

number of arcs, (2) replacement of copper heater castings with graphite components, and (3) rearrangement of the drain system in the region of the arcs. Changes were necessary in electrical connections, thermohm wells, etc., but such changes were made only to accommodate features 1 through 3 above.

The number of arcs was reduced so that (1) each arc could be supplied with charge vapor from a container associated with only that particular arc and (2) maximum ion-beam separation at the receiver could not exceed the separation between adjacent arcs. The desirability of having maximum control over charge vapor cannot be overemphasized in operations involving elements which spark badly during processing. Elements to be processed at temperatures exceeding 600°C include calcium. Hence, provisions had to be made for collection of six isotopes from each arc, isotopic separation between the heaviest and the lightest isotopes (Ca^{48} and Ca^{40}) being 9.2 in. Arcs were thus placed 12 in. apart; this permitted use of existing filament-changing facilities and gave a 2.8-in. separation between the 0.19% abundant Ca^{48} coming from the lower arc of the ion source and the 96.96% abundant Ca^{40} coming from the upper arc. Since sparking is extremely severe in calcium separations, at least 2.8 in. of separation seemed highly desirable.

Replacement of copper heater castings by a graphite structure was accomplished by designing charge and arc heaters, charge container, arc chamber, and associated heat shielding and temperature-control devices in such a manner that the components could all be assembled into one graphite structure. This structure was then supported in the conventional cold frame exactly as was the original J manifold.

The charge container is a graphite box (it could have been made of stainless steel) that has a 240-in.^{2} surface area and is capable of holding 134 in.^{3} of charge material. This box is heated on three sides (top, back, and bottom) with strip-type $\frac{9}{32} \times \frac{1}{8}$ in. carbon resistance heaters that have a total area of 110 in.^{2} exposed toward the charge container. Thus, approximately half of the charge-bottle area is exposed directly to heat, while one-fifth of the area receives heat fed back from the arc-chamber heaters. This leaves the ends of the box, 50 in.^{2}, from which heat is lost. Needless to say, these ends and the heaters themselves are well heat-shielded from the exterior support structure.

The arc chamber is heated on top and bottom by carbon strip-type heaters $\frac{3}{16} \times \frac{1}{8}$ in. in cross section and constituting a total heating area of 25 in.^{2}. The arc chamber is of the reflecting-anode type, accommodating an arc $14\frac{1}{4}$ in. in length. The area of the ion exit slit can be varied to best accommodate the element being processed. A slit area of $3\frac{1}{2}$ in.^{2} has proved to be the most satisfactory so far.

Heat shielding used in this unit consists of multiple layers of 0.040-in.-thick sheets of graphite. The heater elements are insulated from this shielding and from the charge bottle and arc chamber by supports fabricated from Lava A. Approximately 6000 w is required to heat the charge and associated arc chamber to 750°C.

Two receivers, chromium (Fig. 15) and calcium (Fig. 16), have been built for use with the modified ion source. In each case the graphite defining face has been removed from the upper receiver to show pocket construction. All pockets are fabricated from copper and have water-cooling at the base of the pocket. Pockets for the more abundant isotopes, Cr^{52} and Ca^{40}, have additional cooling on both the top and the bottom. Each receiver assembly is mounted on a modified Alpha-2-receiver support frame and is adjustable in both the vertical and the horizontal planes.

People responsible for the design, fabrication, and testing of these units included L. O. Love, W. K. Prater, W. A. Bell, C. V. Ketron, and G. M. Banic.

The source was first utilized in chromium separation, where its performance was quite satisfactory, its output showing a steady increase (Table 18) as the operators became more familiar with its characteristics and as improvements were made in the heater control system.

Production of chromium in the modified source as compared with that in Beta sources in both Beta and Alpha tanks and to production achieved with the conventional four-arc Alpha-2 source is shown in Table 19.

Forty-six per cent of the runs started were terminated because of charge exhaustion; 23% were terminated because charge exhaustion was imminent at the time of week-end shutdown. Maximum reception time in any run was 253 hr.

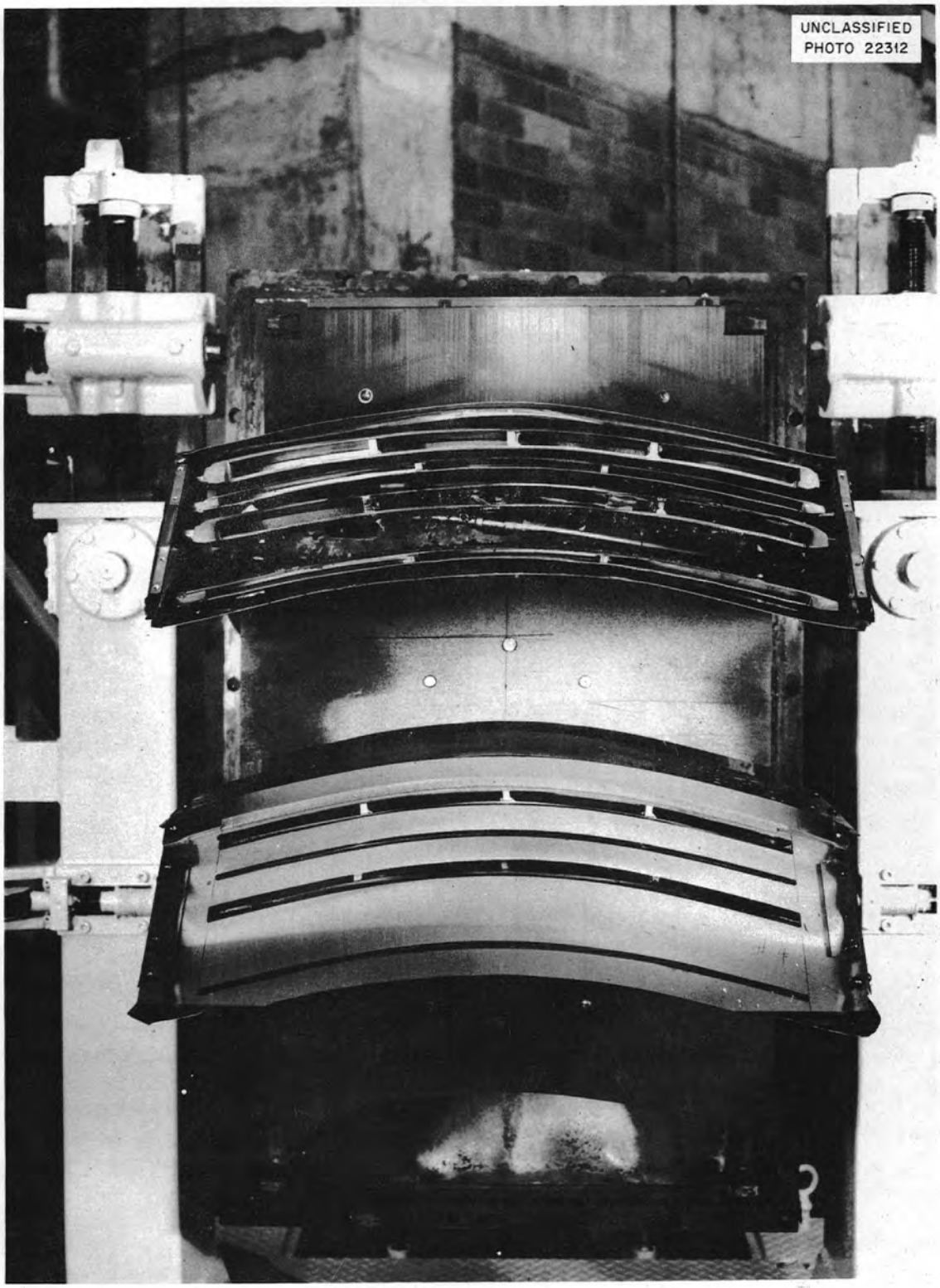

Fig. 15. Chromium Receiver for Use with Modified Alpha-2 Source.

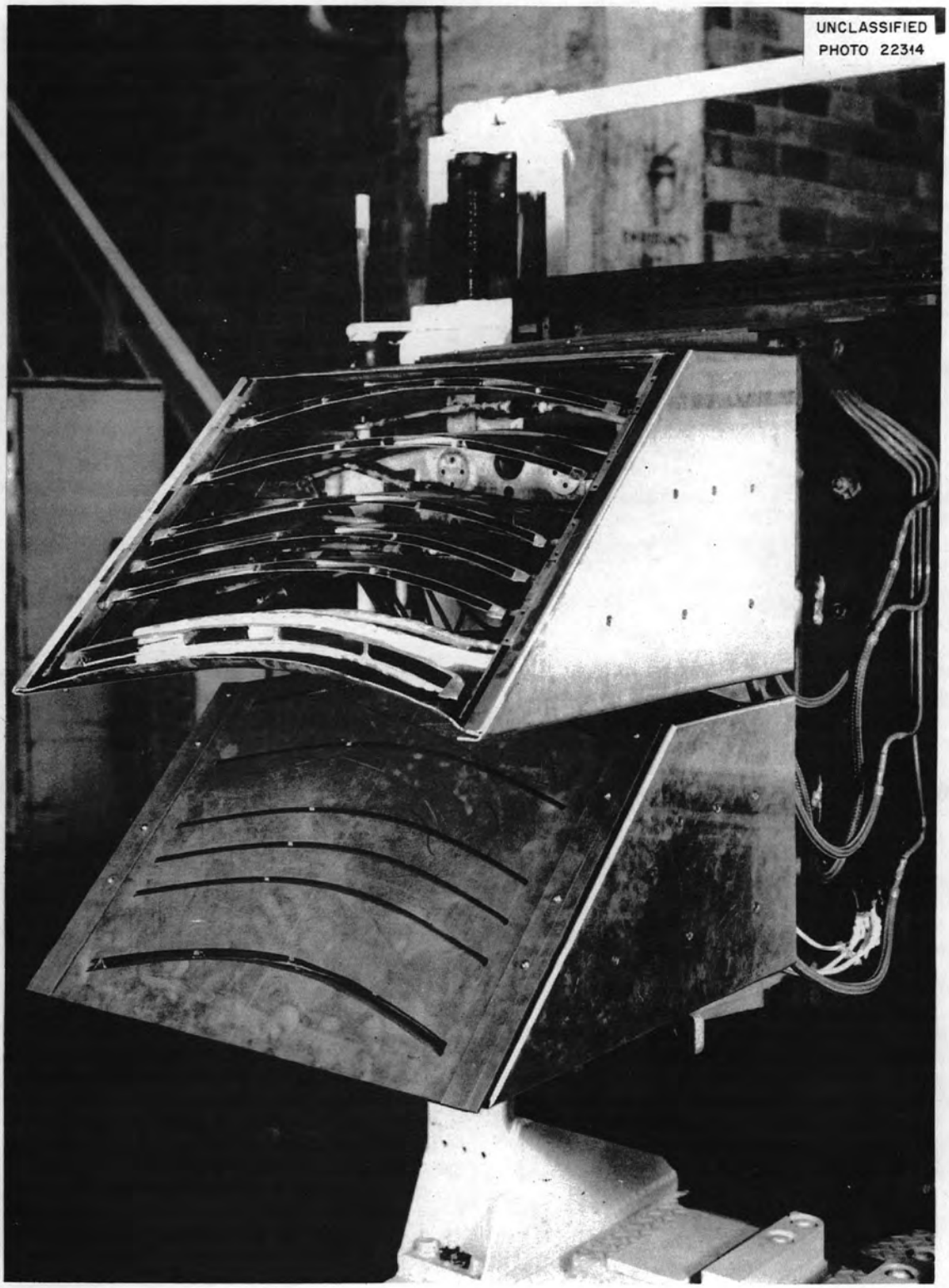

Fig. 16. Calcium Receiver for Use with Modified Alpha-2 Source.

TABLE 18. OUTPUT OF MODIFIED ALPHA-2 ION SOURCE

Month	Ion Reception (hr)	Average Output per Hour of Ion Reception (ma)	Peak Output Attained (ma)
May	224	79.8	117.6
June	669	90.0	197.3
July	770	111.6	242.4
Total	1663	Av 98.6	

TABLE 19. CHROMIUM PRODUCTION IN MODIFIED ALPHA-2 SOURCE COMPARED WITH THAT IN BETA SOURCES AND IN THE CONVENTIONAL ALPHA-2 SOURCE

Source	Tank	Ion Reception (hr)	Average Output per Hour of Reception (ma)	Process Efficiency (%)
Beta M-14	Beta	696	44.7	10.6
Beta M-14	Alpha	629	33.7	5.4
Alpha-2	Alpha	291	15.8	0.9
Modified Alpha-2	Alpha	1663	98.6	4.1

TABLE 20. CALCIUM PRODUCTION IN MODIFIED ALPHA-2 SOURCE COMPARED WITH CALCIUM (SERIES FO) PRODUCTION IN BETA UNITS

Source	Tank	Ion Reception (hr)	Average Output per Hour of Reception (ma)	Peak Output (ma)
Beta	Beta	2121	104.2	184.5
Modified Alpha-2	Alpha	2448	125.9	323.0

Performance of the source in calcium separation parallels that of Beta sources: sparking is excessive; bushings supporting negative electrodes are broken; deposits form on the inner surfaces of the ion exit slit, effectively thickening the slit; and temperature control is difficult due to variations in drain heating. Some breakage of Lava heater insulators is encountered. Calcium output in this unit is compared in Table 20 with that of calcium, series FO, performed with Beta units in Beta tanks, since calcium has not been processed previously in Alpha channels. Modifications are being made in the present drain system, and an adjustment mechanism is being added to the negative electrode, in an effort to improve operation.

Receiver retention is a serious problem in the modified unit, as well as in Beta receivers. In spite of the degree of pocket cooling provided, rejection of isotopes from pockets receiving large ion-beam current is excessive. Retention in these receivers will exceed that in a Beta receiver, but it is below that desired.

STABLE ISOTOPE CHEMISTRY

Boyd Weaver, Department Head

INTRODUCTION

Charge materials were prepared for the separation of the isotopes of five elements. Separated isotopes of 11 elements were chemically refined. A new extraction facility has been used for the separation of europium and dysprosium from rare-earth mixtures. All operations of the chemistry department have been consolidated into the building in which isotopes are separated.

PREPARATION OF CHARGE MATERIALS

C. W. Sheridan W. C. Davis

Materials were prepared for the separation of the isotopes of chromium, nickel, iron, rubidium, and calcium. No special problems not previously reported were encountered except in the case of iron. A 28-g lot of enriched Fe^{56} metal was converted quantitatively to anhydrous $FeCl_2$ for use in producing very pure Fe^{56}.

CHEMICAL REFINEMENT OF ISOTOPES

W. C. Davis R. L. Bailey
F. M. Scheitlin C. W. Sheridan
A. C. Topp

Progress was made in the chemical refinement of isotopes of 11 elements: K, Hf, Zr, Gd, Sm, Cu, Cr, Ni, Ca, Ru, and Fe. The following discussion concerns chiefly those elements of which a series was completed.

Hafnium and Zirconium

The metals were removed from copper pockets by dissolving away copper with 7 *N* nitric acid until only bright copper was left. The small amount of zirconium or hafnium metal dissolved was recovered by ammonium hydroxide precipitation from the copper nitrate solution; it was then redissolved in nitric acid and further purified by electrodeposition of the copper. The major part of the metal was dissolved by digestion with a 3-to-1 mixture of hot concentrated nitric and sulfuric acids and evaporation to fumes of sulfur trioxide. Solutions were combined and filtered. A second ammonium hydroxide precipitate was made, filtered, and dissolved in 6 *N* hydrochloric acid. The desired element was precipitated with mandelic acid on the basis of 27 g of mandelic acid per estimated gram of zirconium dioxide, digested at 85°C for 20 min, and filtered. The mandelate was ignited to oxide at 1000°C.

Whenever further purification was required, the oxide was fused with potassium pyrosulfate and dissolved in water. The hydroxide was precipitated with ammonia, washed with water, and dissolved in 6 *N* hydrochloric acid. Mandelic acid precipitation and ignition were repeated.

Production results for series of both hafnium and zirconium are given in Tables 21 and 22.

Copper

Graphite pockets containing copper isotopes were ignited at 650°C. The residue was dissolved in concentrated nitric acid, diluted to about 12 g per liter, and filtered. The copper was electrodeposited on platinum at 4 v and then dissolved in 6 *N* nitric acid and filtered. The solution was evaporated to dryness in a beaker and ignited by slowly raising the temperature to 325°C.

Production results are given in Table 23.

Gadolinium

For removal of impurities other than rare earths, the usual rare-earth refinement procedure was employed. This involves precipitations with ammonium hydroxide, hydrogen sulfide, and oxalic acid. The other rare earths were separated by elution from Dowex-50 cation exchanger with 5% citric acid buffered by ammonia to pH 2.9. Fractional repetition was required for removal of terbium. Residual amounts of samarium and europium were removed by reduction with sodium amalgam from an acetic acid solution. Production data are in Table 24. The maximum rare-earth impurity in any isotope was 0.2%.

Chromium

The current chromium series was not completed, but much effort was applied to the preparation of Cr^{54} as chromic acid for electroplating a cyclotron target. Attempts to produce the acid quantitatively by passage of an ammonium chromate solution through a cation exchanger were unsuccessful, since there was considerable reduction and the reduced chromium was difficult to remove from the resin. Metathesis between barium chromate

TABLE 21. PRODUCTION DATA ON HAFNIUM ISOTOPES

Isotope	Lot No.	Weight of HfO_2 (g)	Impurities Found (%)					
			Al	Cu	Fe	Mg	Si	Zr
174	GP 825(a)	0.4451				0.01	0.03	
174	GP 825(b)	0.0311	0.08			0.07	0.06	
174	GP 825(c)	0.4443				0.01	0.03	
176	GP 826(a)	1.8799		<0.01		0.005		
176	GP 826(b)	0.3631		<0.01	0.05	0.005		
177	GP 827(a)	3.8635		0.1	0.02			
177	GP 827(b)	0.7724		0.05				
177	GP 827(c)	0.3496		0.05	<0.02		<0.05	
178	GP 828(a)	6.0674		None detected				
178	GP 828(b)	0.4122		None detected				
179	GP 829(a)	3.2937		0.05	0.02		0.1	
179	GP 829(b)	0.6022		0.05			<0.05	
180	GP 830(a)	8.0462				<0.02		
180	GP 830(b)	0.1434		<0.01		0.02	0.01	0.2

TABLE 22. PRODUCTION DATA ON ZIRCONIUM ISOTOPES

Isotope	Lot No.	Weight of ZrO_2 (g)	Impurities Found (%)						
			Cu	Fe	K	Mg	Na	Si	Ti
90	GQ 831(a)	20.5335				<0.01			
91	GQ 832(a)	4.1180	<0.01	0.05		<0.01		0.05	
92	GQ 833(a)	6.4398				0.01			
94	GQ 834(a)	6.0354	<0.05		0.04	0.01			
96	GQ 835(a)	0.7025		0.04		<0.01	0.01		<0.02

TABLE 23. PRODUCTION DATA ON COPPER ISOTOPES

Isotope	Lot No.	Weight of CuO (g)	Impurities Found (%)
63	GT 849(a)	44.4995	Na, 0.01
65	GT 850(a)	15.7102	None detected

and sulfuric acid was incomplete and left too much sulfate in the plating bath. Metathesis between silver chromate and hydrochloric acid was too slow and incomplete.

SEPARATION OF RARE EARTHS

F. A. Kappelmann F. B. Thomas
L. T. Royer R. L. Bailey
C. P. Ferguson

A newly constructed liquid-liquid extraction facility has been applied to the enrichment of europium in samarium-gadolinium mixtures. Material containing from 0.5 to 3% Eu_2O_3 is being processed with the intention of concentrating the Eu_2O_3 into a smaller mass containing at least 10% Eu_2O_3. At this point, other methods may be applied economically to the production of pure Eu_2O_3. More than 1 kg of Eu_2O_3 is contained in the materials being processed. A considerable

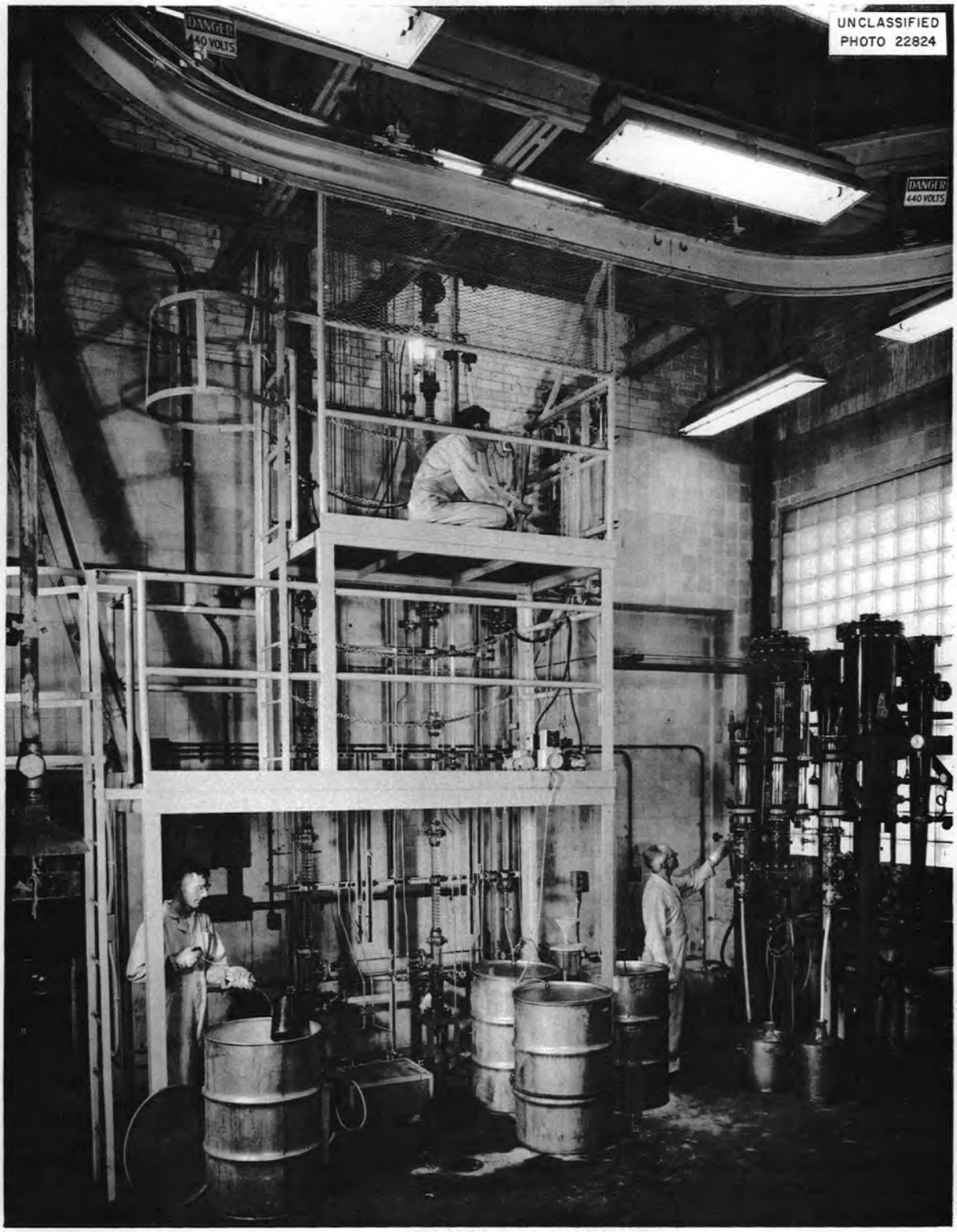

Fig. 17. Equipment for Separation of Rare Earths by Liquid-Liquid Extraction.

TABLE 24. PRODUCTION DATA ON GADOLINIUM ISOTOPES

Isotope	Lot No.	Weight of Gd_2O_3 (g)	Impurities Found (%)								
			Fe	Mg	Na	Si	Ti	Sm	Tb	Er	Y
152	GK 798(a)	0.4400			0.02	0.05					<0.05
154	GK 799(a)	1.9455	None detected								
155	GK 800(a)	8.9600	None detected								
156	GK 801(a)	13.2287							0.2		
157	GK 802(a)	11.2080	<0.04	<0.02							
158	GK 803(a)	7.4820			0.02		<0.04	0.05	0.05	0.05	

fraction of it is now at the 10% level. Multi-kilogram quantities of Sm_2O_3 and Gd_2O_3, of greater than 99% purity, have been produced as by-products. The equipment is shown in Fig. 17.

Smaller extraction equipment has been used for the final concentration of dysprosium for use in isotope separation. More than 1 kg with an average Dy_2O_3 content of 90% is now on hand.

A survey of various solvents has been begun with the aim of finding a substitute for the present nitric acid–tributyl phosphate system.

Ion-exchange chromatography and fractional precipitation with air-borne ammonia and with mandelic acid have been used to prepare gram quantities of very pure Y_2O_3, Er_2O_3, HO_2O_3, Pr_6O_{11}, and concentrates of Tb_4O_7, Tm_2O_3, Yb_2O_3, and Lu_2O_3.

PUBLICATION

The following report has been prepared for distribution: A. C. Topp and Boyd Weaver, *Distribution of Rare-Earth Nitrates Between Tributyl Phosphate and Nitric Acid*, ORNL-1811, Nov. 23, 1954.

RESEARCH AND DEVELOPMENT STABLE ISOTOPES

P. S. Baker
H. B. Greene
F. R. Duncan
W. M. Andrews[1]

UTILIZATION OF STABLE ISOTOPES

The growing utilization of enriched stable isotopes is resulting in an ever-increasing number of requests for special forms of the enriched material. Frequently, the conversion to the particular desired form has resulted in a considerable amount of experimental and developmental work. At other times, the conversions and preparations have been quite straightforward. Occasionally, also, a technique already worked out for a particular isotope has been applied to some isolated special problem. Listed below are some of the problems which have been encountered during the last six months, and in each case there is included a brief discussion of the way in which the problem was treated.

1. *Reduction of $Cd^{114}O$ to metal* for the National Bureau of Standards. – Cadmium-114 in the metal form was obtained by reducing the oxide with carbon dust in a heated quartz tube under vacuum. The refined metal distilled to the cold mouth of the reactor, where it condensed and was later fused into globules about the size of small shot by being melted with an oxyacetylene torch.

2. *Reduction of $Si^{29}O_2$ to the elemental form* for the ORNL 86-in. Cyclotron Group. – A thermite reaction in which magnesium powder is used with MgO as a moderator was employed to obtain elemental silicon from SiO_2. The resulting mixture was leached first with HCl to remove the MgO and then with HF and H_2SO_4 to remove unreacted SiO_2, care being exercised at all times to recover in NaOH any gaseous products of the reaction. The resulting material contained about 2.5% impurities, chiefly magnesium.

3. *The preparation of $Li_2^6SO_4$ films* for the Physics Department of the University of Kentucky. – Satisfactory films of this compound were obtained by flame-spraying tantalum sheet with a Wall Colmonoy oxyacetylene, powdered-metal, flame-spray gun. Loss of enriched material was prevented by doing the spraying under a special cover and over water to trap stray particles.

4. *Reduction of Li^7Cl to metal and fabrication of a hollow Li^7 sphere* for the ORNL Physics Division. – A 3-in. hollow metallic Li^7 sphere, weighing approximately 110 g and comprising two interlocking hemispheres, was fabricated by ladling molten metal into a special combination mold and forming die made of steel. The casting was made slightly oversize so that it could be brought to final dimensions by being hydraulically pressed in the same mold-die combination. The metal was obtained by the barium-reduction procedure previously mentioned.[2] Figures 18 and 19 are sectional views of the final nested hemispheres and of the mold-die, respectively.

In connection with the preparation of isotopic lithium targets, the problem of efficient recovery of unused material continually recurs. The thermochemical reduction of LiCl with barium to obtain lithium metal requires a chemical treatment to recover the unreduced LiCl. In the past this has involved precipitation of the Ba^{++} as $BaSO_4$, followed by filtration and washing to remove as much as possible of the adherent LiCl.

Unfortunately, some isotopic material has been lost as a result of coprecipitation[2] with the $BaSO_4$, since the latter is not easily redissolved.

[1]Summer employee; present address, Vanderbilt University, Nashville, Tenn.

[2]P. S. Baker, F. R. Duncan, and H. B. Greene, *Lithium Metal Production*, ORNL CF-53-4-185, p 6 (May 1, 1953).

UNCLASSIFIED
ORNL-LR-DWG 4491

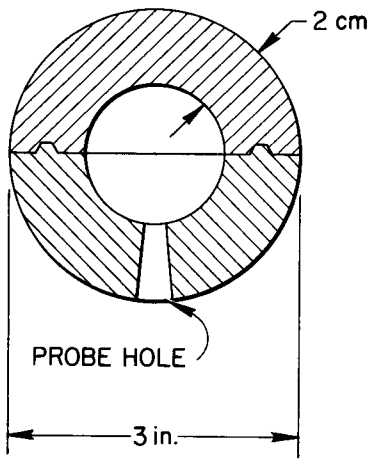

Fig. 18. Lithium-7 Sphere.

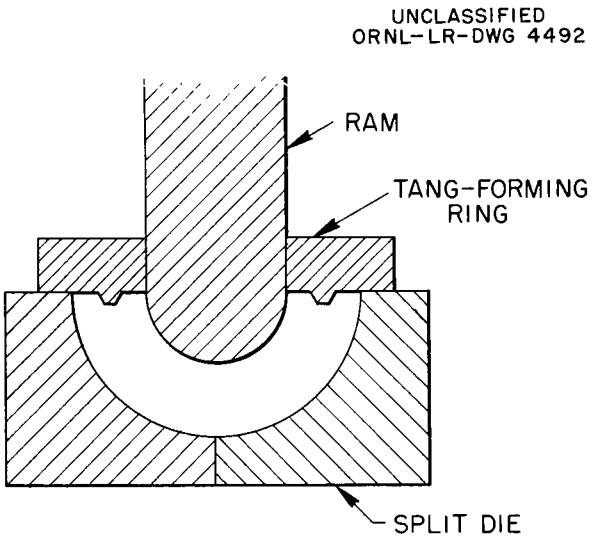

Fig. 19. Mold-Die for Li^7 Sphere.

It has been found recently that, by repeated fractional crystallizations of $BaCl_2$, the LiCl and $BaCl_2$ may be separated almost quantitatively. This separation depends upon two factors: (1) the lower solubility of $BaCl_2$ as compared to LiCl (31 and 59 g for $BaCl_2$ as compared to 67 and 128 g for LiCl per 100 g of water at 0 and 100°C, respectively) and (2) the relative insolubility of $BaCl_2$ in high concentrations of chloride ion (as previously reported by Kallmann[3] and by Seidel and Fischer[4]). In the work reported here, LiCl is substituted for HCl as the source of the chloride ion. The last traces of barium are removed with a small amount of H_2SO_4, thus practically eliminating coprecipitation losses. The big advantage, of course, lies in the fact that the $BaCl_2$ can be rather readily redissolved, thereby permitting complete recovery of the LiCl. Quantitative data for this procedure are now being evaluated.

5. *Preparation of a Cr^{54} target* for the ORNL 86-in. Cyclotron Group. – A 2 × 3 in. section on the surface of a silver ½ × 6 × 7 in. cyclotron target was electroplated with Cr^{54} for proton bombardment to produce Mn^{54}. The plating was carried out from a CrO_3-H_2SO_4 solution in a specially constructed Plexiglas plating vessel. It is possible to deposit 3.5 g of metal from a starting solution containing 7 g of metal equivalent as CrO_3, with the use of a CrO_3/H_2SO_4 ratio of about 200 to 1, a current density of 1 amp/in.^{2}, and a temperature of 44°C, with a total volume of about 250 ml. Conventional lead or lead-tin anodes are used. Figure 20 is a schematic diagram of the electroplating apparatus.

One of the principal difficulties encountered in the chromium problem was the chemistry of the initial conversion of the Cr_2O_3 to CrO_3 and especially the chemistry of the final recovery of CrO_3 from the plating bath. In cooperation with the Stable Isotope Chemistry Production and Research Department, these treatments have been resolved into a series of precipitations and filtrations, which were designed to eliminate contaminations that would otherwise interfere with the plating step.

In general, a precipitation from acid solution with H_2S removes heavy metals and reduces all CrO_4^{--} to the Cr^{3+} state. After being filtered to remove insoluble sulfides, the solution is treated with NH_4OH to precipitate the Cr^{3+} (together with any Fe^{3+} and Al^{3+}) as hydroxide.

The precipitate is then filtered off and after thorough washing is treated with NaOH and H_2O_2 to oxidize the $Cr(OH)_3$ to CrO_4^{--}. Any precipitate at this point [$Fe(OH)_3$ and/or insoluble chromates] is removed; the solution is treated with $AgNO_3$ to precipitate Ag_2CrO_4, which is then filtered off and washed with water until free from silver nitrate.

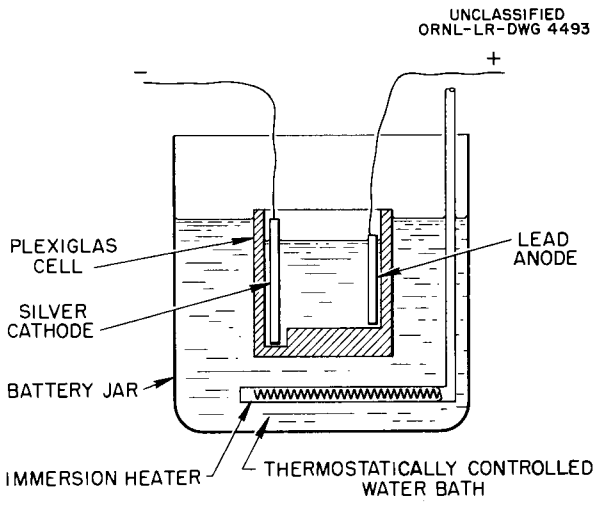

Fig. 20. Chromium-54 Electrolysis Apparatus.

[3] S. Kallmann, *Anal. Chem.* 20, 449 (1948).

[4] W. Seidel and W. Fischer, *Z. anorg. u. allgem. Chem.* 247, 367 (1941).

At this point, dilute HCl is added to the precipitate with vigorous stirring until the Ag_2CrO_4 is almost (but not completely) converted to AgCl and H_2CrO_4. The resulting precipitate is washed well, and the filtrates are carefully evaporated to dryness to give CrO_3.

The use of $HClO_4$ to carry out the conversion has been suggested, but the method has not yet been evaluated.

6. *Preparation of 0.001-in. Ni^{60} foil* for the ORNL 86-in. Cyclotron Group. – Metallic Ni^{60} foils, 1 mil thick, were prepared on two occasions for cyclotron use by electroplating the nickel on thin aluminum sheet from a solution containing $NiSO_4$, NH_4Cl, and H_3BO_3 at room temperature. The aluminum was subsequently dissolved in dilute HCl, leaving the relatively insoluble nickel behind as a thin metal foil. An attempt to roll nickel obtained by hydrogen reduction of the oxide was unsuccessful as far as extremely thin sheets were concerned, probably because of hydrogen embrittlement.

7. *Casting of normal sodium, potassium, and Li^7 targets* for the ORNL ARE Division. – "Cans" of normal sodium, potassium, and Li^7 metal were prepared for use as targets in nuclear measurements by casting the molten metal from hot mineral oil into stainless steel cylindrical vessels. The castings were made slightly longer than the containing tubes, and the ends were cut off after solidification. Close-fitting caps were placed over the ends, and the seams were then sealed with Glyptal. Figure 21 shows such a can.

8. *Casting of normal iridium filaments* for experimental use within the Stable Isotope Research and Production Division. – It was thought that filaments made of pure iridium metal might possibly contribute to greater calutron efficiency as a result of reduced filament wear. Consequently, several such filaments were made by casting spongy pieces of scrap iridium metal into solid filaments in graphite molds. Casting processes appear to be the only practical method for working the metal because of its hardness and lack of malleability and ductility. Figure 22 is a sectional view of the molding apparatus. In practice, the scrap iridium is charged to the reservoirs at the ends of the filament legs and is melted at 2500°C. It then flows by gravity to the mold cavity. The legs are trimmed to length, and any flash is removed by grinding after the filaments have been cooled. Broken filaments may be welded by using scrap iridium filler and the Heliarc welding process.

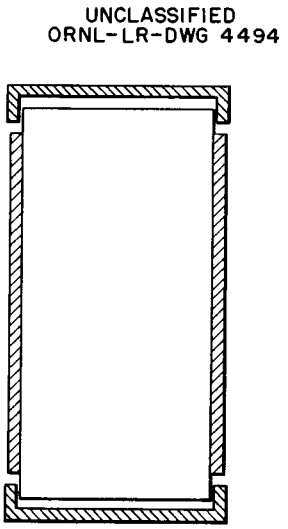

Fig. 21. "Can" for Alkali-Metal Targets.

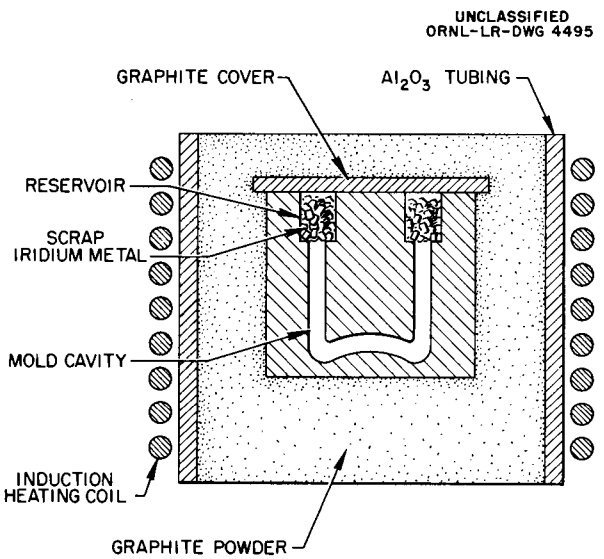

Fig. 22. Iridium Casting Equipment.

So far, the temperature-emission relationships have suggested that such filaments will not be of any particular advantage over those now being used.

9. *Preparation of tellurium targets.* – Samples of $Te^{125}O_2$ and $Te^{130}O_2$ have been prepared for cyclotron bombardment and conversion to I^{125} and

I^{130}. The conversion involved oxidation of elemental tellurium with HNO_3 to the nitrate, followed by thermal decomposition of the nitrate to the oxide.

10. *Thermochemical preparation of metallic rubidium.* – By utilizing some of the reduction techniques developed for lithium, it has been possible to produce about 400 g of high-grade normal rubidium metal by high-temperature vacuum reduction of RbF with metallic calcium.

In addition to the completed work indicated above, several other problems have been submitted and are presently in various stages of completion.

1. A request for deposition of B^{10} on tantalum sheet has been received. The coating with normal boron has been carried out by passing B_2H_6 over the heated base metal under vacuum. Under these conditions, thermal decomposition of the diborane results in the deposition of boron on the tantalum. (The diborane is prepared by the reaction of LiH with BF_3 in ether solution.) The targets so prepared have been submitted to the University of Kentucky Physics Department before proceeding with the enriched material.

2. A request for Re^{187} in thin films on mica sheet has led to the development of a technique for depositing platinum on the mica and then electroplating the rhenium on the platinum. So far, only normal rhenium has been used, but sample targets have been submitted to the requester for comments.

3. Vacuum distillation as a means for removing strontium from calcium to give spectroscopically pure metal is being investigated in cooperation with the Spectrochemical Laboratory of the Spectroscopy Research Department. Calcium containing less than 10 ppm of strontium is desired. To date, the best available calcium metal has been reduced in strontium content from about 600 ppm to less than 200 ppm, and the purity is continuing to increase. At the same time, chemical methods are being considered. Extractions with concentrated nitric acid and with alcohol have been tried, with the evaluation awaiting analytical results.

4. As mentioned earlier, elemental silicon prepared by magnesium reduction retains about 2.5% magnesium. Reduction of Na_2SiF_6 with metallic sodium yields a somewhat purer product. But one request is for spectroscopically pure silicon. In order to prepare this, an apparatus is being built to allow chlorination of impure silicon to form $SiCl_4$, which may then be decomposed on a hot filament in vacuum to give high-purity elemental silicon.

SEPARATION OF STABLE ISOTOPES

1. *Gas collections in the calutron.* – A calutron receiver with two "large-area" pockets was constructed for the purpose of investigating recovery and cleanup of gases collected by adsorption on metal or graphite surfaces. By means of "foot-scrapers" (targets of graphite set at a slight angle to the normal beam) in a somewhat enlarged version of a standard receiver pocket, an area of about 60 in.^{2} was obtained in one of the pockets.

This receiver was exposed to an A^{40} beam in the conventional manner for about 90 min, which was more than ample time to saturate the receiving surfaces. Subsequent outgassing of the target, followed by analyses of the resulting gases, showed the usual mixture obtained by such treatment: H_2, CH_4, CO, CO_2, other hydrocarbons, etc. The small amount of argon obtained, as compared with the amount of the impurities, made quantitative measurements almost impossible, but indications are that approximately 0.5 cc of argon gas can be collected in this manner. A gas-cleanup system is being constructed in which the impurities will be burned or gettered as they are evolved so that a clean sample of the inert gas may be collected.

2. *Cataphoresis.* – In cooperation with the Mass Spectrometry and Vacuum Research Department, an investigation of the purification of inert gases by a d-c glow discharge was carried out in a manner suggested by the work of Riesz and Dieke.[5] As a result of the cataphoresis phenomenon, certain gases are carried toward the cathode and concentrated there.

A glow-discharge tube, 12 in. long and ½ in. in diameter, with a side arm or small chamber at each end beyond the electrodes, was used for the study. The cathode chamber was connected directly to the sampling inlet of a G-E type MS-B analytical mass spectrometer for convenience of analyses. As was found to be the case by Riesz and Dieke, traces of neon or argon in helium, traces of argon or krypton in neon, and traces of krypton in argon, neon, or helium were almost completely concentrated at the cathode end of the tube. In general, whenever the inert gas used as

[5] R. Riesz and G. H. Dieke, *J. Appl. Phys.* 25, 196 (1954).

a trace impurity was heavier than the major component, this impurity was almost completely concentrated at the cathode end. When larger amounts of impurity were used (such as 1% or greater), recycling was found to be necessary to complete the removal of the impurity to the side arm beyond the cathode.

When the impurity was an inert gas lighter than the major constituent, separation either was less pronounced, did not occur at all, or the impurity tended to concentrate at the anode. In the case of krypton, with impurities of air, the impurities concentrated at the anode end. In one such run, a mixture of about 80% krypton and 20% air was introduced into the system to a total pressure of about 18 mm Hg. The discharge was maintained at about 1000 v and 65 ma current. Mass analysis at the end of the run showed:

	Cathode Chamber (%)	Anode Chamber (%)
N_2	1.0	10.1
O_2	0.0	1.6
Kr	99.0	88.3

Several runs were made with normal neon to investigate the possibility of enhancing isotopes by cataphoresis. The results of a typical run are listed in Table 25 as a comparison between the gas from the cathode chamber and that from the main part of the tube. The tube was operated with a pressure of about ¼ atm, 630 v dc, and a current of 100 ma for 100 min. The precision of the results is based on an average of ten scans.

A similar run was made with helium enhanced in He^3 obtained from X-10. Operating conditions were as follows: pressure, 88.3 mm Hg; voltage, 1700 v, dc; current, 60 ma; duration of run, 2 hr. Results of the analyses are listed in Table 26.

A discharge tube of improved design has been constructed, with a valve in the center of the main tube and with water-cooled anode and cathode. By controlling the temperature of the electrodes and comparing the results of an a-c discharge with that of a d-c discharge, it is believed that data which will be obtained will be somewhat more significant.

TABLE 26. CATAPHORESIS OF HELIUM

	He^3 (%)	He^4 (%)
Starting material	4.25 ± 0.010	95.55 ± 0.010
Cathode chamber	4.40 ± 0.015	95.60 ± 0.015
Main tube	4.57 ± 0.015	95.43 ± 0.015
Anode chamber	4.42 ± 0.015	95.58 ± 0.015

3. *Thermal diffusion of helium.* – During the summer, a study was started for the purpose of considering the practicability of erecting a thermal-diffusion apparatus for the enhancement of He^3. A rather thorough literature search indicated that enough experimental work had been done already to assure the feasibility of He^3 enrichment; therefore design of a production-type apparatus was started.

Rather complex calculations, based on the theoretical work done by Jones and Furry,[6] indicated that the maximum practical enhancement with the use of a continuous apparatus is approximately 2% He^3 (an enhancement of 1.3×10^5). In order to obtain 90% He^3, this gas will have to be accumulated until enough is available for a recycle, either in the final stage of the original apparatus or in an entirely separate apparatus.

From the calculations it becomes readily apparent that a multistage apparatus is required for such an enrichment as indicated above. The actual design of the apparatus is developed from the general equations for the transport of the lighter

[6] R. C. Jones and W. H. Furry, *Revs. Mod. Phys.* 18, 151 (1946).

TABLE 25. CATAPHORESIS OF NEON

	Ne^{20} (%)	Ne^{21} (%)	Ne^{22} (%)
Starting material	90.69 ± 0.01	0.260 ± 0.001	9.04 ± 0.01
Cathode chamber	90.64 ± 0.01	0.261 ± 0.001	9.100 ± 0.01
Main part of tube	90.78 ± 0.01	0.261 ± 0.001	8.96 ± 0.01

isotope in a thermal-diffusion column. The so-called "transport coefficients" depend upon the physical properties of helium, the temperature and pressure in the system, and upon the physical parameters of the columns. It turns out that in order to match the transport of He^3 in successive stages of the system, the best design comprises a final hot-wire column preceded by several stages of concentric-tube columns.

The interdependence of one parameter upon another necessitates laborious calculations in designing the system, the requirement that transport be matched from stage to stage being of prime importance. By suitable maximizing, practical tube sizes, gas pressures, temperature, etc., can be determined for a workable system.

In the particular case discussed here, a four-stage apparatus plus scrubber has been considered, with approximate dimensions as follows: the scrubbers to consist of two 5-ft concentric-tube columns in parallel (designed for rejection of 50% of the He^3 and to bleed off normal helium at the rate of about 2700 liters/day); the first stage to consist of two concentric-tube 10-ft columns in parallel; the second stage a single concentric-tube 2-ft column; the third stage a 3-ft concentric-tube column; and the fourth stage a 5-ft hot-wire column. The center tube of the concentric columns, acting as the hot wall in each case, will operate at approximately 625°C, and the hot wire will operate at 1125°C. The walls will be kept at about 25°C. The total power consumption during operation will be approximately 30 kw.

The system will be filled with helium to a pressure of about 8.3 atm. Under these conditions the theoretical yield is about 10 cc/day (STP) of helium in which the final concentration of He^3 is 2×10^{-2}.

UTILIZATION OF ENRICHED STABLE ISOTOPES

Figure 23 illustrates the progress made in electromagnetic separation of stable isotopes since 1945. Initially, the calutrons were adapted to a succession of elements. After operations with an element became fairly successful, collections were continued until approximately 0.25 mole of the element had been collected as its enriched isotopes. Then another element was started.

At various times, process development and the investigation of new elements had to be interrupted, and collections of the isotopes of a single element continued to secure larger quantities than usual. Also, as a wider variety of separated isotopes became available, more and more calutron time was necessary for inventory replenishment. The periods labeled "inventory replenishment" on the chart include normal inventory replenishment and periods necessary to supply urgent Commission needs.

It is evident that, in the future, periods of process development and the processing of new elements will decrease and periods of inventory replenishment will increase. In fact, demands for enriched isotopes in larger quantities, particularly for neutron-cross-section studies and for radioisotope production in the 86-in. cyclotron, have become so critical that various methods are being proposed for the expansion of stable isotope production.

Table 27 gives a summary of the isotope shipments that were made during the period from May 20, 1954 to November 20, 1954.

Table 28 is a list of the requests for isotopes that were not approved by the AEC; also included is the reason for withholding approval.

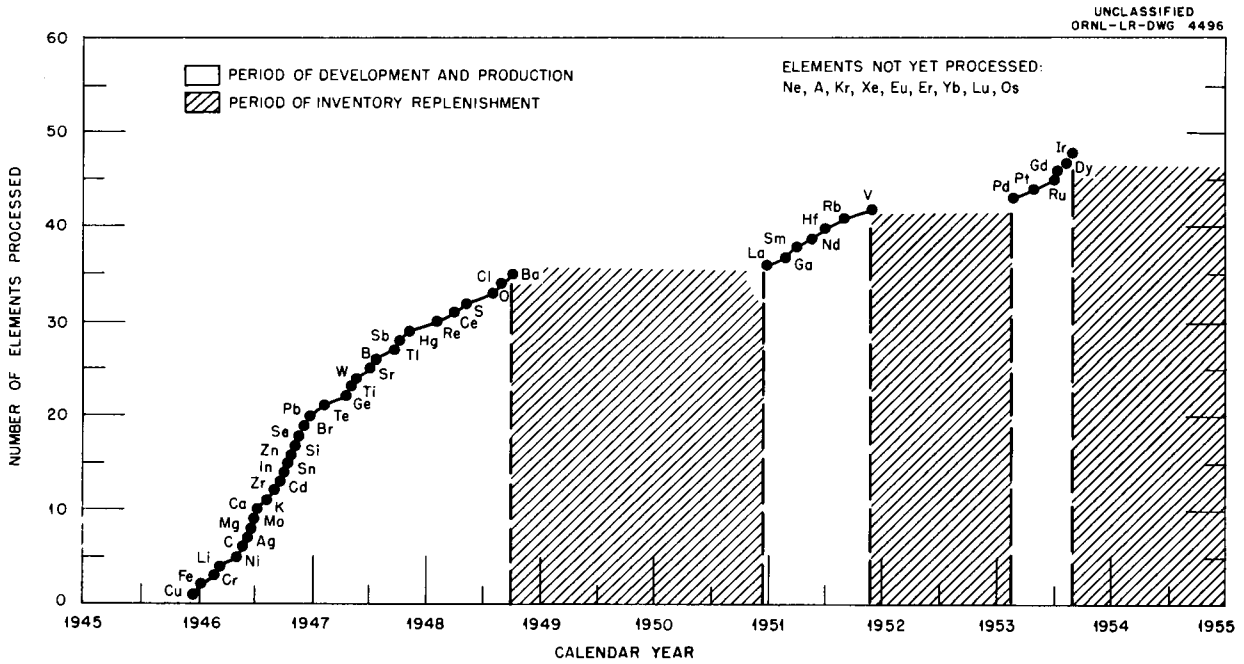

Fig. 23. Progress Made in Electromagnetic Separation of Isotopes, 1945 to 1955.

TABLE 27. SUMMARY OF ISOTOPE SHIPMENTS, MAY 20, 1954 TO NOVEMBER 20, 1954

Request No.	Requester	Isotope	Lot	Quantity (mg)
B-4466	Carnegie Institution of Washington	Ti^{47}	BF 216(a)	86
B-4382	Duke University	Ce^{140}	FR 708(a)	5,001
B-4417	Ohio State University	Si^{29}	GC 762(a)	51
B-4418	Ohio State University	Mg^{25}	DZ 520(a)	61
B-4459-S	Oak Ridge National Laboratory	Rb^{85}	EW 619(a)	244
B-4458-S	Oak Ridge National Laboratory	Rb^{87}	EW 620(a)	679
B-4356	Columbia University	Ca^{40}	FF 648(a)	10
B-4243	Bartol Research Foundation	Ca^{40}	FF 648(a)	3,510
B-4242	Bartol Research Foundation	Ni^{58}	FJ 669(a)	3,503
B-4530	Carnegie Institution of Washington	Nd^{148}	EQ 592(ar)	104
B-4413	University of Texas	Cu^{65}	DU 498(a)	305
B-4414	University of Texas	Cu^{63}	FJ 673(a)	307
B-4457-S	Oak Ridge National Laboratory	K^{39}	EY 624(i)	1,000
B-4373	Westinghouse Electric Corporation	Fe^{54}	DO 477(a)	32,510
B-4501	Duke University	Zr^{90}	CK 334(a)	7,001
B-4502	Duke University	Zr^{94}	EE 542(a)	5,001
B-4503	Duke University	Zr^{92}	EE 541(a)	5,002
B-4511-S	University of California Radiation Laboratory	Li^{7}	FI 668(j-2)	1,100
B-4473-S	Argonne National Laboratory	Li^{6}	FY 745(c)	200
B-4419-S	Argonne National Laboratory	Zn^{70}	EK 560(a)	88
B-4514-S	Oak Ridge National Laboratory	Cr^{53}	D 12(a)	64
			CD 311(a)	32
B-4441	Duke University	Hg^{201}	DR 489(as)	80
B-4479	The Rice Institute	Cu^{63}	DF 426(a)	52
B-4547-S	Oak Ridge National Laborotory	Cu^{63}	DF 426(a)	504
B-4546-S	Oak Ridge Notional Laboratory	Mg^{25}	DZ 520(a)	502
B-4544-S	Oak Ridge National Laboratory	K^{41}	DT 496(a)	303
B-4518	Vanderbilt University	Sn^{112}	EC 527(au)	8
B-4366-S	Brookhaven National Laboratory	Sn^{115}	EC 529(a)	403
B-4551-S	Oak Ridge National Laboratory	Fe^{54}	B 3(a)	66
			AM 122(a)	335
B-4552-S	Oak Ridge National Laboratory	Ca^{44}	EV 616(a)	489
B-4394-S	Oak Ridge National Laboratory	Gd^{152}	GK 798(a)	100
B-4528	University of Michigan	W^{186}	EL 565(a)	504
B-4578-S	Oak Ridge National Laboratory	Ti^{46}	GA 752(a)	101

TABLE 27 (continued)

Request No.	Requester	Isotope	Lot	Quantity (mg)
B-4579-S	Oak Ridge National Laboratory	Zr^{90}	EE 539(a)	506
B-4288	University of Arkansas	Tl^{205}	CF-3 323(a)	108
B-4393	State University of Iowa	B^{11}	GF 769(a)	76
B-4580-S	Brookhaven National Laboratory	W^{182}	EL 562(a)	2,505
B-4581-S	Brookhaven National Laboratory	W^{183}	EL 563(a)	2,500
B-4582-S	Brookhaven National Laboratory	W^{184}	EL 564(a)	2,500
B-4583-S	Brookhaven National Laboratory	W^{186}	EL 565(a)	2,502
B-4584-S	Brookhaven National Laboratory	Cd^{110}	AX 171(a)	1,500
B-4585-S	Brookhaven National Laboratory	Cd^{111}	CE 317(a)	2,000
B-4586-S	Brookhaven National Laboratory	Cd^{112}	CE 318(a)	2,505
B-4587-S	Brookhaven National Laboratory	Cd^{113}	CE 319(a)	1,500
B-4588-S	Brookhaven National Laboratory	Cd^{114}	CE 320(a)	2,001
B-4589-S	Brookhaven National Laboratory	Sb^{123}	BT 275(a)	308
B-4590-S	Brookhaven National Laboratory	Mo^{95}	RT 55(a)	607
B-4591-S	Brookhaven National Laboratory	Mo^{96}	RT 56(a)	1,502
B-4593-S	Brookhaven National Laboratory	Zr^{91}	CK 335(ar)	1,006
B-4594-S	Brookhaven National Laboratory	Tl^{203}	CH 326(br)	2,005
B-4595-S	Brookhaven National Laboratory	Nd^{144}	GI 785(a)	2,002
B-4596-S	Brookhaven National Laboratory	Pt^{195}	GH 779(a)	2,082
B-4592-S	Brookhaven National Laboratory	Mo^{97}	AW 167(a)	405
B-4574	National Bureau of Standards	Sn^{119}	EC 533(a)	213
B-3765	University of Wisconsin	Sn^{114}	EC 528(a)	103
B-3767	University of Wisconsin	Sn^{116}	EC 530(a)	252
B-3768	University of Wisconsin	Sn^{117}	EC 531(a)	253
B-3769	University of Wisconsin	Sn^{118}	FS 715(a)	251
B-3770	University of Wisconsin	Sn^{119}	EC 533(a)	252
B-3771	University of Wisconsin	Sn^{120}	FS 717(a)	250
B-4407	Naval Research Laboratory	Br^{81}	EJ 553(a)	83
B-4561	Washington University	Fe^{57}	DM 459(a)	171
B-4564	Washington University	Fe^{56}	AZ 184(a)	201
B-4563	Washington University	Cr^{52}	CD 310(a)	201
B-4609-S	Argonne National Laboratory	K^{39}	DB 410(a)	5,008
B-4649	Princeton University	C^{12}	FD 638(aj)	1,820
B-4635	University of Pennsylvania	Zr^{90}	EE 539(a)	3,516

TABLE 27 (continued)

Request No.	Requester	Isotope	Lot	Quantity (mg)
B-4636	University of Pennsylvania	Zr^{91}	CV 382(a)	842
B-4637	University of Pennsylvania	Mg^{24}	DZ 519(a)	3,278
B-4638	University of Pennsylvania	Mg^{25}	DZ 520(a)	665
B-4506	Duke University	Ni^{60}	FJ 670(a)	5,512
B-4505	Duke University	Ni^{58}	FJ 669(a)	5,505
B-4639	University of Pennsylvania	Hf^{180}	GP 830(a)	5
B-4600	University of Southern California	Hg^{202}	DR 490(e)	113
B-4675-S	Los Alamos Scientific Laboratory	Li^{7}	FI 668(j-2)	15,300
B-4670-S	Los Alamos Scientific Laboratory	Li^{6}	FY 745(bd)	2,011
B-4681-S	Los Alamos Scientific Laboratory	Ir^{191}	GL 810(a)	58
B-4641	Princeton University	Pt^{190}	GH 776(a)	23
B-4642	Princeton University	Pt^{192}	GH 777(a)	80
B-4657-S	Oak Ridge National Laboratory	C^{12}	FD 638(aj)	205
B-4702-S	Los Alamos Scientific Laboratory	Li^{6}	FY 745(bd)	2,000
B-4656-S	Phillips Petroleum Company	Ni^{58}	AS-AT 141-147(a)	11
B-4655-S	Phillips Petroleum Company	Ni^{62}	K 36(a)	11
B-4660	University of Minnesota	Nd^{150}	GI 789(a)	110
B-4667	Indiana University	Re^{185}	CP 356(a)	208
B-4569	Ohio State University	Fe^{56}	DO 478(ar)	504
B-4461	University of Rochester	W^{182}	EL 562(a)	202
B-4460	University of Rochester	W^{180}	EL 561(a)	53
B-4652-S	Argonne National Laboratory	Br^{79}	EJ 552(a)	138
B-4651-S	Argonne National Laboratory	Br^{81}	EJ 553(a)	93
B-4708-S	Oak Ridge Notional Laboratory	K^{40}	GN 821(f)	14
B-4722-S	Oak Ridge National Laboratory	Li^{7}	FI 668(j)	174,500
B-4205	University of Kentucky	Li^{6}	FY 745(be)	56
B-4695	The Johns Hopkins University	B^{11}	GF 769(a)	251
B-4258	University of Arkansas	Hg^{204}	DR 491(as)	95
B-4661-S	Argonne National Laboratory	S^{33}	GB 758(a)	253
B-4173	Princeton University	Gd^{154}	GK 799(a)	23
B-4174	Princeton University	Gd^{152}	GK 798(a)	21
B-4605-S	University of California	Ag^{109}	SU 42(br)	1,403
B-4733-S	Oak Ridge National Laboratory	Gd^{152}	GK 798(a)	12
B-4734-S	Oak Ridge National Laboratory	Ru^{102}	GJ 795(b)	11

TABLE 27 (continued)

Request No.	Requester	Isotope	Lot	Quantity (mg)
B-4735-S	Oak Ridge National Laboratory	Ru^{96}	GJ 790(a)	10
B-4736-S	Oak Ridge National Laboratory	Pd^{102}	GG 770(a)	8
B-4737-S	Oak Ridge National Laboratory	Pd^{104}	GG 771(a)	12
B-4738-S	Oak Ridge National Laboratory	Pd^{105}	GG 772(a)	10
B-4739-S	Oak Ridge National Laboratory	Pd^{106}	GG 773(a)	12
B-4740-S	Oak Ridge National Laboratory	Pd^{108}	GG 774(a)	12
B-4741-S	Oak Ridge National Laboratory	Pd^{110}	GG 775(a)	11
B-4686	Naval Research Laboratory	Li^{6}	FY 745(bd)	1,000
B-4683	Naval Research Laboratory	Li^{7}	FI 668(i)	1,000
B-4700-S	Argonne National Laboratory	Mg^{25}	BX 289(a)	225
B-4773-S	Arganne National Laboratory	Sr^{84}	FL 679(a)	7
B-4471	Duke University	Sn^{124}	FS 719(b)	903
			EC 536(as)	1,304
B-4507	Duke University	Te^{130}	CA 299(a)	4,006
F-1596-S	Centre National de la Recherche Sc.	Ga^{69}	EI 554(a)	507
F-1597-S	Centre National de la Recherche Sc.	Cd^{108}	AX 170(a)	28
F-1598-S	Centre National de la Recherche Sc.	Cd^{112}	AX 172(a)	1,008
F-1600-S	Centre National de la Recherche Sc.	Ni^{58}	DF 422(a)	207
B-4728	Bartol Research Foundation	Cd^{114}	CE 320(a)	109
B-4730-S	Los Alamos Scientific Laboratory	Cu^{63}	DU 497(a)	5,004
B-4751-S	Los Alamos Scientific Laboratory	Cu^{65}	DU 498(o)	2,004
B-4682-S	Oak Ridge National Laboratory	Li^{7}	COMP-1	111,293
B-4604-S	University of California	Ag^{109}	EA 523(a)	851
B-4726	University of Florida	Li^{6}	FY 745(c)	101
B-4759	National Bureau of Standards	Cd^{114}	CE 320(a)	109
B-4800-S	Los Alamos Scientific Laboratory	Ir^{193}	GL 811(a)	100
B-4719-S	Knolls Atomic Power Laboratory	Sm^{154}	EM 574(a)	2,506
B-4718-S	Knolls Atomic Power Laboratory	Sm^{152}	GM 818(a)	2,506
B-4717-S	Knolls Atomic Power Laboratory	Sm^{150}	GM 817(a)	2,505
B-4716-S	Knolls Atomic Power Laboratory	Sm^{149}	GM 816(a)	605
B-4715-S	Knolls Atomic Power Laboratory	Sm^{148}	GM 815(a)	2,505
B-4714-S	Knolls Atomic Power Laboratory	Sm^{147}	GM 814(a)	1,002
B-4811-S	Oak Ridge National Laboratory	In^{113}	CO 354(a)	104
B-4807-S	Oak Ridge National Laboratory	Ir^{191}	GL 810(a)	107
B-4796	Carnegie Institution of Washington	Hf^{179}	GP 829(b)	205

TABLE 27 (continued)

Request No.	Requester	Isotope	Lot	Quantity (mg)
B-4798	Carnegie Institution of Washington	Hf^{177}	GP 827(c)	204
B-4774	University of Utah	Ca^{46}	FO 693(a)	3
B-4709-S	Knolls Atomic Power Laboratory	Hf^{180}	GP 830(a)	2,504
B-4710-S	Knolls Atomic Power Laboratory	Hf^{179}	GP 829(a)	2,004
B-4711-S	Knolls Atomic Power Laboratory	Hf^{178}	GP 828(a)	2,504
B-4712-S	Knolls Atomic Power Laboratory	Hf^{177}	GP 827(a)	2,003
B-4713-S	Knolls Atomic Power Laboratory	Hf^{176}	GP 826(a)	1,005
B-4771	Massachusetts Institute of Technology	Cl^{35}	FW 736(a)	103
B-4809-S	Oak Ridge National Laboratory	Ir^{193}	GL 811(a)	104
B-4817-S	Oak Ridge National Laboratory	Fe^{56}	CZ 404(f)	206
B-4789-S	Brookhaven National Laboratory	Sr^{84}	FL 679(a)	109
B-4788-S	Brookhaven National Laboratory	Ba^{136}	FT 724(a)	2,005
F-1931-S	Atomic Energy of Canada, Ltd.	Nd^{144}	EQ 589(ar)	9
F-1930-S	Atomic Energy of Canada, Ltd.	Nd^{142}	EQ 587(ar)	9
B-4816-S	Oak Ridge National Laboratory	Ni^{60}	FJ 670(a)	205
B-4743	Columbia University	Sb^{121}	AE 93(ar)	202
B-4215	Columbia University	Zr^{96}	GQ 835(a)	53
B-4369	Carnegie Institution of Washington	Gd^{155}	GK 800(a)	54
B-4792	Sylvania Electric Products, Inc.	K^{41}	FA 631(a)	2
B-4826-S	Oak Ridge National Laboratory	Cu^{63}	FJ 673(a)	1,003
B-4617-S	Oak Ridge National Laboratory	Li^{6}	FY 745(be)	12,000
B-4827-S	Brookhaven National Laboratory	Sn^{122}	CR 368(a)	2,529
B-4783-S	University of California Radiation Laboratory	C^{12}	FD 638(aj)	504
B-2556-S	University of California Radiation Laboratory	Gd^{154}	GK 799(a)	15
B-2577-S	University of California Radiation Laboratory	Gd^{152}	GK 798(a)	13
B-4858-S	Oak Ridge National Laboratory	Nd^{145}	GI 786(a)	204
B-4857-S	Oak Ridge National Laboratory	Sn^{122}	EC 535(a)	206
B-4861-S	Oak Ridge National Laborotory	Sn^{122}	FS 717(a)	205
B-4859-S	Oak Ridge National Laboratory	Zr^{96}	GQ 835(a)	13
B-4490	Duke University	Ba^{138}	FU 733(a)	12,000
B-4508	Duke University	Ba^{136}	FU 731(a)	7,688
B-4844	Carnegie Institute of Technology	Pb^{204}	EO 581(a)	274
B-4843	Carnegie Institute of Technology	Hf^{174}	GP 825(a)	105
B-3862	Carnegie Institute of Technology	Gd^{152}	GK 798(a)	23

TABLE 27 (continued)

Request No.	Requester	Isotope	Lot	Quantity (mg)
B-4831-S	University of California Radiation Laboratory	Li^6	GD 764(e)	251
B-4831-S	University of California Radiation Laboratory	Li^7	CU 379(a)	251
B-4813	Columbia University	Sr^{84}	FL 679(a)	5
F-1984-T	Atomic Energy of Canada, Ltd.	Sm^{149}	FH 663(a)	5
F-1985-T	Atomic Energy of Canada, Ltd.	Sm^{150}	EM 572(a)	4
F-1986-T	Atomic Energy of Canada, Ltd.	Sm^{154}	GM 819(a)	9
B-4863	Massachusetts Institute of Technology	Zn^{67}	BK 242(a)	54
B-4906	Carnegie Institution of Washington	Gd^{157}	GK 802(a)	104
F-1991-T	Milan Polytechnic College	Te^{128}	FE 646(a)	31
B-4748	University of Washington	Pb^{208}	EO 584(a)	2,004
B-4749	University of Washington	Pb^{207}	BO 259(a)	1,002
B-4750	University of Washington	Pb^{206}	EO 582(a)	1,005
B-3290	Yale University	Gd^{152}	GK 798(o)	37
B-3291	Yale University	Gd^{154}	GK 799(a)	34
B-4890	Carnegie Institution of Washington	Ca^{42}	EV 614(a)	12
B-4886	Massachusetts Institute of Technology	Li^6	FY 745(bd)	55
B-4887	Massachusetts Institute of Technology	B^{10}	GF 768(a)	51
B-4888	Massachusetts Institute of Technology	B^{11}	DP 482(a)	51
B-4892-S	Oak Ridge National Laboratory	Hg^{202}	DR 490(e)	2
B-4893-S	Oak Ridge National Laboratory	Te^{125}	CA 296(ar)	388
B-4835	University of Minnesota	Sm^{154}	GM 819(a)	103
B-4836	University of Minnesota	Sm^{152}	GM 818(a)	106
B-4833	University of Minnesota	Sm^{148}	GM 815(a)	108
B-4834	University of Minnesota	Sm^{150}	GM 817(a)	105
B-4909-S	Brookhaven National Laboratory	Li^6	FY 745(bd)	255
B-4910-S	Brookhaven National Laboratory	Li^7	FI 668(j)	260
B-4901	The Rice Institute	Fe^{54}	FN 685(a)	201
B-4899	The Rice Institute	Ni^{60}	FJ 670(a)	205
B-4900	The Rice Institute	Ni^{58}	DF 422(a)	202
B-4920-S	Oak Ridge National Laboratory	Si^{29}	GC 762(a)	298
B-4724	Westinghouse Electric Corporation	Zr^{90}	GQ 831(a)	10,003

TABLE 28. REQUESTS FOR ISOTOPES NOT APPROVED BY AEC

Allocation No.	Applicant	Isotope	Amount (mg)	Reason for AEC Withholding Approval	Status in Production Schedule
B-4489	Duke University	Ba^{134}	2,000	Awaiting availability of higher enrichment	
B-4487	Duke University	Ba^{136}	6,000	Awaiting availability of quantity and enrichment	
B-4488	Duke University	Ba^{137}	6,000	Awaiting availability of higher enrichment	
B-4756	University of Kentucky	B^{10}	50–100	Additional information needed from requestor	
B-4491	Duke University	Ca^{42}	2,000–4,000	Not now available	In process in calutron
B-4493	Duke University	Ca^{43}	1,000	Not now available	In process in calutron
B-4492	Duke University	Ca^{44}	4,000–6,000	Not now available	In process in calutron
B-3897	Yale University	Ca^{48}	100	Not now available	In process in calutron
B-4310	Washington University	Ca^{48}	100–1,000	Not now available	In process in calutron
B-4529	University of Michigan	Ca^{48}	500	Not now available	In process in calutron
B-4540S	Argonne National Laboratory	Ca^{48}	50	Not now available	In process in calutron
B-4614	Massachusetts Institute of Technology	Ca^{48}	35–50	Not now available	In process in calutron
B-4779	University of California	Ca^{48}	500–1,000	Not now available	In process in calutron
B-4801S	Los Alamos Scientific Laboratory	Cr^{53}	1,000–2,000	Awaiting chemical refinement of sample	In process; estimated completion, December 1954
B-4822S	Argonne National Laboratory	Cr^{53}	500	Awaiting chemical refinement of sample	In process; estimated completion, December 1954
B-4959S	Argonne National Laboratory	Cu^{63}	5,000	Additional information needed from applicant	
B-4958S	Argonne National Laboratory	Cu^{65}	3,000	Additional information needed from applicant	
B-4869	Columbia University	Hf^{178}	5,000	Not now available	
B-4705	University of Wisconsin	Fe^{54}	49,000	Not now available	Awaiting return of B-4373 by Jennings of Westinghouse
B-4553	Carnegie Institute of Technology	Li^{6}	50,000	Not now available	
B-4468	Duke University	Mg^{25}	3,000–6,000	Not now available	
B-5032	Massachusetts Institute of Technology	Mg^{25}	90	Additional information needed from applicant	

TABLE 28 (continued)

Allocation No.	Applicant	Isotope	Amount (mg)	Reason for AEC Withholding Approval	Status in Production Schedule
B-4467	Duke University	Mg^{26}	3,000–6,000	Not now available	
B-4976	Carnegie Institution of Washington	Mo^{100}	200	Not now available	
B-4285	University of Arkansas	Ni^{58}	1,000–3,000	Awaiting clarification concerning MTR irradiation	
B-3249S	Brookhaven National Laboratory	Ni^{64}	50	Awaiting chemical refinement	In process; estimated completion, December 1954
B-3954	Columbia University	Ni^{64}	1,000	Awaiting chemicol refinement	In process; estimated completion, December 1954
B-3780	The Johns Hopkins University	Rb^{85}	350–700	Awaiting clarification as to whether it is still needed	
B-4470	Duke University	Rb^{87}	3,000–6,000	Not now available	In process in calutron
B-4812	Columbia University	Rb^{87}	10–30	Not now available	In process in calutron
B-4915	Columbia University	Rb^{87}	2,000	Not now available	In process in calutron
B-4927	Ohio State University	Ru^{98}	100	Awaiting chemical refinement	In process; estimated completion, December 1954
B-4928	Ohio State University	Ru^{99}	100	Awaiting chemical refinement	In process; estimated completion, December 1954
B-4929	Ohio State University	Ru^{100}	100	Awaiting chemical refinement	In process; estimoted completion, December 1954
B-4930	Ohio State University	Ru^{101}	100	Awaiting chemical refinement	In process; estimated completion, December 1954
B-4218S	Argonne National Laboratory	Ru^{104}	1–10	Awaiting chemical refinement	In process; estimated completion, December 1954
B-4972	Carnegie Institution of Washington	Ru^{104}	200	Awaiting chemical purification	In process; estimated completion, December 1954
B-3934	University of Wisconsin	Sm^{144}	150–250	Awaiting clarification as to whether it is still needed	
B-4495	Duke University	Sr^{86}	4,000	Not now available	
B-4496	Duke University	Sr^{87}	4,000	Not now available	
B-4603	Duke University	S^{33}	200	Awaiting clarification as to quantity and quality needed	
B-4469	Duke University	Tl^{203}	5,000–10,000	Not now available	
B-4113	Carnegie Institution of Washington	V^{50}	200–500	Not now available	

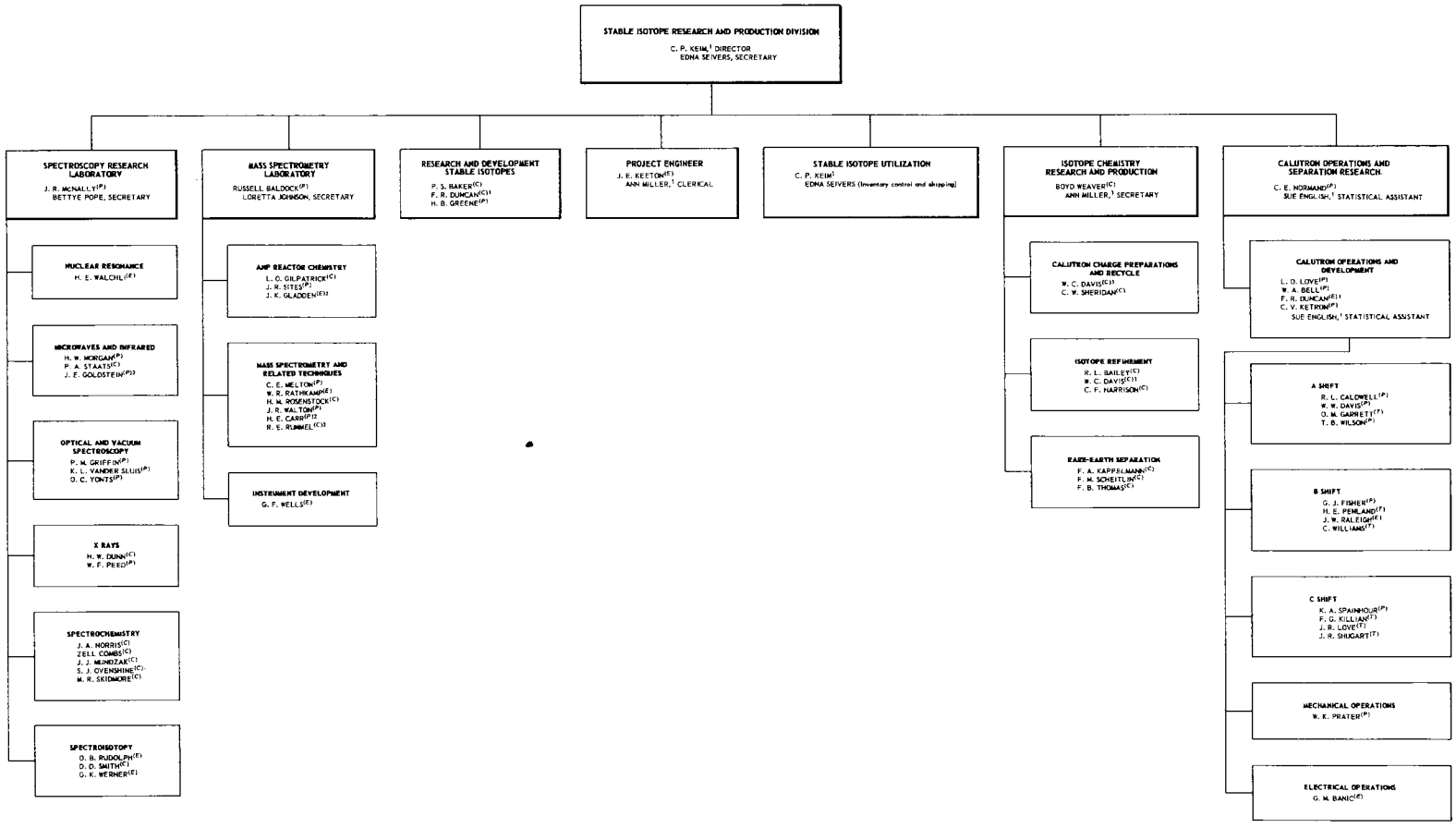

[1] DUAL LISTING
[2] CONSULTANT

(C) CHEMIST
(E) ENGINEER
(P) PHYSICIST
(T) SENIOR LABORATORY TECHNICIAN