CENTRAL RESEARCH LIBRARY
DOCUMENT COLLECTION

[redacted]

Declassified

Classification Cancelled
Or Changed To
By Authority Of AEC 9.13.71
By E. Goldberg Date 11.4.71

ORNL-1881
Progress
4a

MARTIN MARIETTA ENERGY SYSTEMS LIBRARIES
3 4456 0360748 9

CHEMICAL TECHNOLOGY DIVISION

SEMIANNUAL PROGRESS REPORT

FOR PERIOD ENDING MARCH 31, 1955

AEC RESEARCH AND DEVELOPMENT REPORT

CENTRAL RESEARCH LIBRARY
DOCUMENT COLLECTION

LIBRARY LOAN COPY

DO NOT TRANSFER TO ANOTHER PERSON

If you wish someone else to see this document, send in name with document and the library will arrange a loan.

OAK RIDGE NATIONAL LABORATORY
OPERATED BY
CARBIDE AND CARBON CHEMICALS COMPANY
A DIVISION OF UNION CARBIDE AND CARBON CORPORATION

UCC

POST OFFICE BOX P
OAK RIDGE, TENNESSEE

[redacted]

RESTRICTED DATA

This document contains Restricted Data as defined in the Atomic Energy Act of 1954. Its transmittal or the disclosure of its contents in any manner to an unauthorized person is prohibited.

[redacted]

[redacted]

ORNL-1881

This document consists of 39 pages.

Copy 4 of 139 copies. Series A.

Contract No. W-7405-eng-26

CHEMICAL TECHNOLOGY DIVISION

SEMIANNUAL PROGRESS REPORT

for Period Ending March 31, 1955

F. L. Culler – Director
F. R. Bruce – Associate Director and Chemical Development Chief
W. K. Eister – Unit Operations Chief
H. E. Goeller – Process Design Chief
H. K. Jackson – Pilot Plant Chief

DATE ISSUED

JUN 10 1955

OAK RIDGE NATIONAL LABORATORY
Operated by
CARBIDE AND CARBON CHEMICALS COMPANY
A Division of Union Carbide and Carbon Corporation
Post Office Box P
Oak Ridge, Tennessee

[redacted]

MARTIN MARIETTA ENERGY SYSTEMS LIBRARIES

3 4456 0360748 9

[redacted]

INTERNAL DISTRIBUTION

[redacted] C. E. Center
[redacted] Library
[redacted] Health Physics Library
4-6. Central Research Library
[redacted] Experimental [redacted] Laboratory
[redacted] Laboratory Records Department
[redacted] Laboratory Records, ORNL R.C.
[redacted] Anderson
[redacted] Emlet (K-25)
[redacted] J. E. Murray (Y-12)
[redacted] Weinberg
17. E. H. Taylor
18. E. J. Murphy
19. E. D. Shipley
20. F. C. VonderLage
21. [redacted] Culler
23. W. H. Jordan
24. J. A. Swartout
[redacted]
26. A. H. Snell
27. A. Hollaender
28. M. T. Kelley
29. G. H. Clewett
30. K. Z. Morgan
31. T. A. Lincoln
[redacted] der
[redacted]
34. C. E. Winters
35. [redacted] W. Cardwell
36. E. M. King
37. W. K. Eister
38. F. R. Bruce
39. H. K. [redacted]
40. R. S. Livingston
[redacted]
42. [redacted] Susano
[redacted]
[redacted] S. Cromer
45. [redacted]
[redacted]
47. [redacted] Klotzbach
[redacted] R. B. Briggs
[redacted] D. D. [redacted]
[redacted] P. M. Reyling
[redacted] G. C. Williams
[redacted] E. P. [redacted] (consultant)
[redacted] R. W. Johnson
[redacted] J. A. Lane
[redacted] R. E. [redacted]
[redacted] W. [redacted]
57. D. E. Ferguson
58. R. A. Charpie
59. G. E. Boyd
60. J. L. Gabbard
61. M. J. Skinner
[redacted] Library, [redacted]

[redacted] DISTRIBUTION

[redacted] Argonne National Laboratory
[redacted] Special Weapons Project (Sandia)
[redacted] Special Weapons Project (Washington)
[redacted] Atomic Energy Commission, Washington
[redacted] Brookhaven National Laboratory
[redacted] Carbide and Carbon Chemicals Company (C-31 Plant)
[redacted] Carbide and Carbon Chemicals Company (K-25 Plant)
[redacted] Group
[redacted] Augusta
[redacted] Pont Company, Wilmington
[redacted] Electric Company, Richland
[redacted] F. W. Albaugh)
[redacted]

[redacted]

[redacted]

[redacted] Iowa State College
[redacted] Knolls Atomic Power Laboratory
[redacted] Los Alamos Scientific Laboratory
[redacted] Mound Laboratory
[redacted] Naval Research Laboratory
112-115 New York Operations Office
[redacted] Patent Branch, Washington
117-120 University of California Radiation Laboratory, Berkeley
[redacted]
[redacted] Research and [redacted]
[redacted] Sylvania Electric Products, Inc.

[redacted]

[redacted]

Reports previously issued in this series are as follows:

ORNL-268	Period Ending May 31, 1949
ORNL-467	Period Ending August 31, 1949
ORNL-530	Period Ending November 30, 1949
ORNL-663	Period Ending February 28, 1950
ORNL-763	Period Ending May 31, 1950
ORNL-846	Period Ending August 31, 1950
ORNL-936	Period Ending November 20, 1950
ORNL-1000	Period Ending February 20, 1951
ORNL-1061	Period Ending May 20, 1951
ORNL-1141	Period Ending August 20, 1951
ORNL-1311	Period Ending February 10, 1952
ORNL.1328	Period Ending May 20, 1952
ORNL-1385	Period Ending August 20, 1952
ORNL-1448	Period Ending November 20, 1952
ORNL-1494	Period Ending February 20, 1953
ORNL-1561	Period Ending September 30, 1953
ORNL-1708	Period Ending March 31, 1954
ORNL-1800	Period Ending September 30, 1954

[redacted]

CHEMICAL TECHNOLOGY DIVISION

F. L. CULLER, DIRECTOR
VIRGINIA WELLS, SECRETARY
F. R. BRUCE, ASSOCIATE DIRECTOR
JULIA HOPPE, SECRETARY
MARTHA GERRARD, REPORTS EDITOR

LONG RANGE PLANNING COMMITTEE
R. J. KLOTZBACH
E. D. ARNOLD
D. E. FERGUSON[1]
A. T. GRESKY
A. C. JEALOUS

C. W. SCHERSTEN, ASSISTANT TO DIRECTOR
H. B. GRAHAM, BUDGET AND COSTS
BETTYE BURNS, TYPIST
PRISCILLA M. SAVAGE, TYPIST
J. W. CLARK, PROCUREMENT

CHEMICAL DEVELOPMENT SECTION

F. R. BRUCE,[1] SECTION CHIEF
J. A. McLAREN, SPECIAL ASSIGNMENT
J. A. MARINSKY,[2] CONSULTANT
(a) R. E. BLANCO,[1] ASSISTANT SECTION CHIEF
(b) D. E. FERGUSON,[1] ASSISTANT SECTION CHIEF
ESTELLE GREENE, SECRETARY
IMOGENE LOOPE, TYPIST
MARY LYNN CAMERON, TYPIST

TECHNICIANS
J. E. FARMER
C. F. KECK

(b) THOREX PROCESS, MONEX PROCESS
R. P. WISCHOW, PROBLEM LEADER
R. G. MANSFIELD

TECHNICIANS
R. C. LOVELACE
C. J. SHIPMAN

(a) U^{235} RECOVERY, DISSOLUTION STUDIES, HOPE PROJECT
J. R. FLANARY, PROBLEM LEADER
J. H. GOODE
A. H. KIBBEY
J. E. SAVOLAINEN[1]
R. G. WYMER

TECHNICIANS
L. A. BYRD
D. M. HELTON
E. R. JOHNS
J. F. LAND
R. C. SHIPWASH

(b) ANP FUEL REPROCESSING, VOLATILITY
G. I. CATHERS, PROBLEM LEADER
M. R. BENNETT

(b) HOMOGENEOUS REACTOR BLANKET REPROCESSING
R. E. LEUZE, PROBLEM LEADER
D. O. CAMPBELL
R. H. RAINEY
W. E. TOMLIN

TECHNICIANS
J. M. DELOZIER
C. W. GREENE
D. R. HENDRIX
O. K. TALLENT

(b) HOMOGENEOUS REACTOR FUEL REPROCESSING
R. A. McNEES, PROBLEM LEADER
J. T. ROBERTS, PROBLEM LEADER
S. PETERSON[3]

TECHNICIAN
W. B. HOWERTON

(b) HOMOGENEOUS REACTOR SLURRY DEVELOPMENT
J. P. McBRIDE, PROBLEM LEADER
V. D. ALLRED
S. R. BUXTON[3]
A. R. JONES[3]
E. V. JONES[3]
N. A. KROHN
L. E. MORSE
C. E. SCHILLING
D. G. THOMAS[3]
W. M. WOODS

TECHNICIANS
W. L. PATTISON
H. F. SOARD

(a) METALLEX PROCESS
O. C. DEAN, PROBLEM LEADER
J. M. CHANDLER
C. P. JOHNSTON
J. E. SAVOLAINEN[1]

TECHNICIANS
J. F. TALLEY
C. T. THOMPSON

(a) EXCER, FLUOROX
R. E. BLANCO,[1] PROBLEM LEADER
B. H. MORRISON

(a) ION EXCHANGE TECHNOLOGY
I. R. HIGGINS, PROBLEM LEADER

TECHNICIAN
W. E. SHOCKLEY

PROCESS DESIGN SECTION

H. E. GOELLER, SECTION CHIEF
H. R. ZEITLIN, ORSORT
W. E. UNGER, ASSISTANT SECTION CHIEF
NELLINE HULSEY, SECRETARY
LUCILLE KUYKENDALL, SECRETARY
MAY PEPPER, SECRETARY
ELAINE DILLOW, SECRETARY
K. F. STOOKSBURY, CLERK

U^{235} PROCESSING
E. L. NICHOLSON, PROBLEM LEADER
F. N. BROWDER
E. J. FREDERICK[1,3]
F. E. HARRINGTON[1]
J. B. RUCH

THOREX PROCESS, HOPE PROJECT
B. F. BOTTENFIELD, PROBLEM LEADER
A. R. IRVINE
G. W. T. KEARSLEY

DRAFTSMAN
J. P. JARVIS[3]

ANP FUEL RECOVERY, VOLATILITY
R. P. MILFORD

HOMOGENEOUS REACTOR FUEL REPROCESSING, PROCESS DESIGN
W. L. CARTER, PROBLEM LEADER
C. E. GUTHRIE[4]
H. O. WEEREN

HOMOGENEOUS REACTOR FUEL REPROCESSING, PROCESS ENGINEERING
A. M. ROM, PROBLEM LEADER
F. C. McCULLOUGH
H. E. WILLIAMSON

DRAFTSMEN
G. B. BERRY[3]
R. V. FOLTZ[3]
J. H. MANNEY[3]
F. L. PEISHEL[3]
J. N. WHEELER[3]

METALLEX
W. F. SCHAFFER

FLUOROX PROCESS
F. E. HARRINGTON[1]

ECONOMIC STUDIES
W. G. STOCKDALE, PROBLEM LEADER
P. L. ROBERTSON

HIGH ACTIVITY LEVEL CHEMICAL DEVELOPMENT FACILITY
E. J. FREDERICK[1,3]

FISSION PRODUCT ACTIVITY LEVEL CALCULATIONS
J. O. BLOMEKE

UNIT OPERATIONS SECTION

W. K. EISTER, SECTION CHIEF
J. C. BRESEE, SPECIAL ASSIGNMENT
H. F. JOHNSON, CONSULTANT
S. H. JURY, CONSULTANT
(a) T. A. AREHART,[1] GROUP LEADER
(b) J. T. LONG, GROUP LEADER
(c) E. O. NURMI, GROUP LEADER
(d) C. D. WATSON, GROUP LEADER
VIRGINIA MORRIS, SECRETARY
MARILYN JOHNSON, TYPIST

TECHNICIAN
T. D. NAPIER

(d) U^{235} PROCESSING
R. B. KEELY
F. J. McNAMEE
G. A. WEST

TECHNICIAN
F. L. ROGERS

(d) DISSOLUTION
D. L. FOSTER, PROBLEM LEADER

TECHNICIAN
G. B. DINSMORE

(b) ANP FUEL RECOVERY, VOLATILITY
S. H. STAINKER

(c) HOMOGENEOUS REACTOR FUEL REPROCESSING AND SLURRY STUDIES
R. W. HORTON, PROBLEM LEADER
P. A. HAAS, PROBLEM LEADER
M. E. WHATLEY, PROBLEM LEADER
J. R. ENGEL

TECHNICIANS
R. D. ARTHUR
V. L. FOWLER
G. JONES
D. H. NEWMAN
P. E. NOVAK[5]
R. O. PAYNE
G. E. WOODALL

(a) METALLEX PROCESS
J. C. SUDDATH, PROBLEM LEADER
C. W. HANCHER

TECHNICIANS
D. W. LEIGH
J. C. ROSE

(b) FLUOROX PROCESS
J. E. MOORE, PROBLEM LEADER
M. A. TURNER

TECHNICIANS
D. BOWEN[5]
G. R. GUINN
J. R. PHILLIPS[5]
J. S. WATSON[5]

(a) ION EXCHANGE TECHNOLOGY
T. A. AREHART,[1] PROBLEM LEADER

TECHNICIAN
J. S. TAYLOR

PILOT PLANT SECTION

H. K. JACKSON, SECTION CHIEF
G. S. SADOWSKI, SPECIAL ASSIGNMENT
W. D. BURCH, ORSORT
(a) W. H. LEWIS,[1] GROUP LEADER
(b) E. M. SHANK, GROUP LEADER
(c) R. B. LINDAUER, GROUP LEADER
AGNES HAIR, SECRETARY
LORETTA JOHNSON, TYPIST
R. B. WATERS, DRAFTSMAN
E. WRIGHT, CLERK

(b) THOREX PROCESS
J. W. LANDRY, PROBLEM LEADER
E. LIEBERMAN, PROBLEM LEADER
R. H. WINGET, PROBLEM LEADER
C. V. ELLISON
A. J. PECQUET
W. R. WINSBRO, PROBLEM LEADER
K. H. McCORKLE
W. T. McDUFFEE, PROBLEM LEADER
J. L. GORY
L. J. KING
H. H. MESSENHEIMER
J. R. PARROTT
R. H. VAUGHN

OPERATORS
W. T. BOSTIC
J. H. BROCK
E. W. BROWN
J. R. COLLINS
R. M. DUFF
J. H. GRDOVER
R. L. HICKEY
J. E. HIGGINS
W. A. LINDSEY
W. A. SHANNON
H. R. THOMAS
C. E. WADDELL
J. H. WALKER
F. H. WATSON

(a) U^{235} RECOVERY, HOPE
W. H. LEWIS[1]

(a) METAL RECOVERY
J. L. MATHERNE, PROBLEM LEADER
W. R. WHITSON
C. D. HYLTON
R. E. BROOKSBANK
G. D. DAVIS
J. F. LOCKWILLER
D. E. SPANGLER
D. H. SUMMERS

TECHNICIAN
R. E. PURKEY

OPERATORS
C. W. BOATMAN
E. C. BRANTLEY
H. S. CALDWELL
J. M. GLASGOW
M. C. HILL
C. H. JONES
J. W. MEADE
S. A. McCOSH
R. J. SHANNON
S. E. SPENCER
W. M. SPROULE
G. R. THOMPSON
H. C. THOMPSON

(a) HOMOGENEOUS REACTOR FUEL AND BLANKET REPROCESSING
R. B. LINDAUER[1]

(a) HOMOGENEOUS REACTOR SLURRY STUDIES
W. H. CARR, PROBLEM LEADER

OPERATOR
W. J. BRYAN

[1]DUAL CAPACITY.
[2]IONICS PERSONNEL.
[3]ON LOAN.
[4]ATLANTIC REFINING COMPANY PERSONNEL.
[5]CO-OP STUDENT.

TOTAL PERSONNEL

SCIENTIFIC	110
TECHNICAL	72
ADMINISTRATIVE AND CLERICAL	24
	206

[redacted]

LECTURES

J. A. McLaren, "Corrosion," Mass. Inst. Technol., Boston, Oct. 8, 1954 (unclassified).

F. L. Culler, "Radiochemical Waste," Div. of Biol. and Medicine, AEC, Washington, Nov. 14, 1954 (unclassified).

R. E. Blanco, "Moving Bed Reactor Developments," Feed Materials Process Development Meeting, Cincinnati, Ohio, Dec. 9, 1954 (Secret).

R. E. Blanco, "Higgins Continuous Ion Exchange Contactor," *ibid.*, Dec. 9, 1954 (Secret).

F. L. Culler, "Continuous Reduction of Thorium Tetrachloride to Metal at Room Temperature," *ibid.*, Dec. 10, 1954 (Secret).

C. D. Watson, "Radioactive Decontamination Properties of Selected Laboratory Surfaces," Clemson College, Clemson, S. C., ORNL-ORINS Traveling Lecture Program, Dec. 3, 1954 (unclassified).

C. D. Watson, "Radiation Damage to Materials of Construction," *ibid.* (unclassified).

C. D. Watson, "The Scope of the Engineer in the Atomic Energy Industry," *ibid.* (unclassified).

F. R. Bruce, "Radiochemical Processing," Office of Naval Research, Nuclear Sciences Seminar, Oak Ridge, Tenn., Dec. 3, 1954 (unclassified).

W. K. Eister, "Waste Disposal," *ibid.* (unclassified).

G. I. Cathers, "Recovery and Decontamination of Uranium from Fused Salts," Third Annual Symposium on High-Temperature Processing, Argonne, Jan. 18, 1955 (Secret).

G. I. Cathers, "Dissolution of Heterogeneous Fuels in Fused Salts," *ibid.*, Jan. 18, 1955 (Secret).

A. C. Jealous and H. F. Johnson, "Power Requirements for Pulsing a Pulse Column," Div. of Ind. and Eng. Chem. Am. Chem. Soc. Annual Symposium, Cincinnati, Ohio, Jan. 8, 1955 (unclassified).

J. T. Roberts, "Ion Exchange as a Unit Operation," Joint Meeting of AIChE and Graduate Chem. Eng. Seminar, Washington University, St. Louis, Mo., Jan. 18, 1955 (ORNL-ORINS Traveling Lecture Program) (unclassified).

W. K. Eister, "The Engineer in the Atomic Energy Industry," AIChE Student Chapter, Univ. of Virginia, March 8, 1955 (ORNL-ORINS Traveling Lecture Program) (unclassified).

[redacted]

[redacted]

PUBLICATIONS

M. R. Bennett, *Electrodecontamination of Stainless Steel,* ORNL-1608 (Oct. 13, 1954) (Secret).

A. T. Gresky, R. P. Wischow, M. R. Bennett, and J. E. Savolainen, *Laboratory Development of the Thorex Process: Progress Report, August 1, 1953, to June 30, 1954,* ORNL-1757 (Jan. 27, 1955) (Secret).

E. D. Arnold, A. T. Gresky, R. J. Klotzbach, and A. R. Irvine, *Preliminary Cost Estimation: Chemical Processing and Fuel Costs for a Thermal Breeder Reactor Power Station,* ORNL-1761 (Jan. 27, 1955) (Secret).

E. D. Arnold and A. T. Gresky, *Relative Biological Hazards of Radiations Expected in Homogeneous Reactors TBR and HPR,* ORNL-1765 (March 3, 1955) (Secret).

R. G. Wymer, D. M. Helton, A. H. Kibbey, and J. F. Land, *Caustic Dissolution: Preliminary Studies,* ORNL-1782 (Jan. 14, 1955) (Secret).

P. A. Haas and A. C. Jealous, *Development of the Calcium Hydroxide Slurry Process for Thorex Solvent Recovery,* ORNL-1784 (Feb. 1, 1955) (Secret).

E. L. Nicholson, *An Economic Study of the Chlorine Trifluoride Volatility Process for Recovery of Uranium and Plutonium from Irradiated Reactor Fuels,* ORNL-1786 (Jan. 11, 1955) (Secret).

W. G. Stockdale and P. L. Robertson, *A Cost Analysis of the Idaho Chemical Processing Plant,* ORNL-1792 (Jan. 4, 1955) (Official Use Only).

Chemical Technology Division Semiannual Progress Report for Period Ending September 30, 1954, ORNL-1800 (Dec. 28, 1954) (Secret).

E. J. Parsi, *The Electrochemical Utilization of Ion Exchange Membranes in AEC Operations,* ORNL-1812 (Jan. 17, 1955) (Secret).

D. O. Campbell, *Decontamination of Stainless Steel,* ORNL-1826 (Feb. 17, 1955) (Secret).

R. E. Brooksbank, J. L. Matherne, and W. R. Whitson, *Terminal Report on the Recovery of Plutonium and Americium from Hanford Metallurgical Waste in the ORNL Metal Recovery Plant,* ORNL-1850 (Feb. 16, 1955) (Secret).

I. R. Higgins and J. T. Roberts, "A Countercurrent Solid-Liquid Contactor for Continuous Ion Exchange," *Chem. Eng. Prog. Symposium Series* **50**(14), 87–92 (1954) (Presented at AIChE Meeting, St. Louis, Mo., December, 1953) (unclassified).

H. G. Duggan and J. W. Landry, "Remote Liquid Sampling: A Completely Automatic Air-Lift System," *Nucleonics* **12**(11), 67–69 (1954).

E. J. Frederick, "High-Radiation-Level Analytical Laboratory," *Nucleonics* **12**(11), 36–37 (1954).

[redacted]

[redacted]

CONTENTS

Abstract 1

Summary 1

PART I. REACTOR FUEL REPROCESSING AND DEVELOPMENT 2
1. Thorex Process 2
2. Recovery of U^{235} 5
3. Homogeneous Reactor Slurry Development Studies 10
4. Hope Project 11
5. Fuel Element Dissolution Studies 12
6. Volatility Studies 15
7. Homogeneous Reactor Fuel and Blanket Reprocessing 15
8. Waste Metal Recovery 18

PART II. RAW AND FEED MATERIALS STUDIES 20
9. Metallex Process 20
10. Fluorox Process 22
11. Ion-Exchange Technology 24
12. Monex Process 25
13. Excer Process 25

PART III. GENERAL CHEMISTRY AND ENGINEERING STUDIES 28
14. Economic Studies 28
15. High-Activity-Level Chemical Development Facility 28
16. Fission-Product Activity-Level Calculations 28
17. Chemical Engineering Research Studies 28

[redacted]

CHEMICAL TECHNOLOGY DIVISION
SEMIANNUAL PROGRESS REPORT

ABSTRACT

Progress during the period October 1, 1954, to March 31, 1955, is reported on the following projects: Thorex Process, Recovery of U^{235}, Hope Program, Dissolution Studies, Volatility Studies, Homogeneous Reactar Fuel and Blanket Reprocessing, Homogeneous Reactor Slurry Development Studies, Waste Metal Recavery, Metallex Process, Fluorox Process, Ion-Exchange Technology, Monex Process, Excer Process, Economic Studies, High-Activity-Level Chemical Development Facility, Fission-Product Activity-Level Calculations, and Chemical Engineering Research Studies on magnetic filters.

SUMMARY

REACTOR FUEL REPROCESSING AND DEVELOPMENT

Preoperational testing of the Thorex Pilot Plant with nonradioactive feed was completed, and 3.45 kg of U^{233} was isolated from 2.6 tons of Hanford irradiated thorium metal.

Preliminary equipment layouts were made for the U^{235} recovery plant to be located at Savannah River. All equipment except the first-cycle feed centrifuge is located in a directly maintained facility.

Design was begun of a high-activity-level chemical processing facility, which will be used partly for testing equipment and processes developed in the Hope Program.

Design of the hydroclone liquid-solid separator system for processing HRT fuel was begun. Data obtained in preliminary studies indicate that continuous removal of neptunium from the Plutonium Producer blanket will be necessary. More than 3000 lb of thorium dioxide was produced from thorium nitrate by oxalate precipitation and calcination for use in large-scale studies on the suitability of thorium dioxide slurries for the HRT blanket.

About 15 kg of plutonium and 0.2 g of americium were recovered from the Los Alamos Clementine fuel elements. Alterations were made in the Metal Recovery Plant, and processing of Brookhaven fuel elements was begun.

RAW AND FEED MATERIALS PROCESSING

In the Metallex process for producing thorium metal from thorium nitrate, direct chlorination of thorium oxide, without carburization, and dry reduction of the thorium tetrachloride with sodium amalgam are now recommended. Preliminary studies on a similar process for producing uranium were made.

A flowsheet was developed for the Fluorox process in which moving-bed reactors and solid pellet feed are utilized in converting uranium solution to UF_6 gas; UF_4 is converted to UF_6 by oxygen instead of by fluorine gas.

Unfiltered digested sulfuric acid ore leach pulp was successfully processed in the 6-in.-dia Higgins continuous ion-exchange column at a rate equivalent to 2.5 tons of uranium ore per day.

The Monex tributyl phosphate solvent extraction process was developed for recovering thorium and uranium from unclarified Brazilian monazite sludge.

A cation-exchange membrane prevented anode corrosion in the Excer process for converting uranyl nitrate to UF_4.

GENERAL CHEMISTRY AND ENGINEERING STUDIES

Analysis of the operating cost of the Idaho Chemical Processing Plant during the first fuel processing runs indicated that some of the principal factors affecting the capital outlay and operating costs were shielding, criticality considerations, location of the plant, and SF Accountability requirements.

Design was started on a facility which will be used for development work on highly radioactive materials.

PART I. REACTOR FUEL REPROCESSING AND DEVELOPMENT

Improved methods of recovering and decontaminating fissionable material and unchanged starting material from heterogeneous fuel elements and fused-salt fuel are being developed. In the case of aqueous homogeneous reactors, new materials for use in the fuel and blanket are being investigated, and methods for reprocessing the fuel and blanket are being studied. The fields of study include:

1. development and improvement of the Thorex process for recovering thorium and U^{233} from irradiated thorium slugs,
2. process development and preliminary design information for a U^{235} recovery plant to be located at Savannah River,
3. the Hope program of developing more economical methods of processing solid fuels,
4. studies on improved methods of dissolving solid fuel elements,
5. development and operation of a process for recovering the ARE fused-salt fuel,
6. development of nonaqueous methods of processing fuel, particularly volatility methods,
7. development of a process for recovering and decontaminating the aqueous homogeneous reactor fuel and blanket materials,
8. development of new materials to be used in the fuel and blanket of aqueous homogeneous reactors,
9. processing of waste material for recovery of uranium and other fissionable materials which can be returned to reactor use.

1. THOREX PROCESS

Development of the Thorex solvent extraction process for recovering U^{233} and thorium from reactor-irradiated thorium metal has reached the pilot-plant stage. The U^{233} is obtained as a uranyl nitrate solution suitable for conversion to metal, and the thorium nitrate product can be converted to metal for slug refabrication. The process will also be used for recovering the U^{233} and thorium from the thermal breeder fuel and blanket (see Sec. 6). Development runs are now being made in the pilot plant, which will eventually be used for routine processing of Hanford or Savannah River irradiated thorium at a rate of 200 kg/day. Preliminary runs were made with nonradioactive and with radioactive feed, and the plant was decontaminated following the radioactive runs so that repairs and modifications could be made. Small-scale studies on process improvement are continuing.

Pilot Plant Operation. Operation of the Thorex Pilot Plant with nonradioactive feed was completed, and some Hanford irradiated thorium metal was processed beginning December 27, 1954, before any radioactive development runs had been made, in order to meet a February 1, 1955, commitment. In the first series of runs approximately 2.6 tons of metal was processed continuously, from which 3.45 kg of purified U^{233} was isolated. The U^{233} concentration of the nonbonded thorium slugs averaged 1686 g per ton of thorium, and the average cooling time was 264 days.

The flowsheet used was published previously.[1] The irradiated thorium slugs were dissolved, in seven batches of 240 slugs each, in 13 *M* nitric acid–0.04 *M* fluoride ion–0.003 *M* mercuric ion; about 10 hr at 120°C was required to dissolve the slugs. The resulting solution was evaporated in another tank to reduce the nitric acid concentration to between 0.1 *M* acid and 0.2 *M* acid deficiency. The acid fumes were recovered for re-use. The feed adjustment–acid recovery cycle is the time-limiting step of the process, 22 hr being required for preparation of enough feed solution to sustain a thorium processing rate through the columns of 200 kg/day.

The adjusted feed solution was processed in the solvent-extraction pulse columns (see Table 1.1) in seven runs, each run lasting about 44 hr, at a thorium processing rate of 200 kg/day. Losses in this step (see Table 1.2) were satisfactorily low for the first series of runs, but process changes will be made in the development runs to decrease the losses.

The ruthenium decontamination factor for the uranium product was initially about 6×10^4 and then decreased to about 3×10^3 over the series of runs. Other decontamination factors were consistent. Thorium was the major contaminant in the uranium products, averaging about 3.5×10^{-3} g per gram of uranium. The U^{233} product solutions also contained approximately 0.2 g per liter of

[1] A. T. Gresky, R. P. Wischow, M. R. Bennett, and J. E. Savolainen, *Laboratory Development of the Thorex Process: Progress Report August 1, 1953, to June 30, 1954*, ORNL-1757, Fig. 2.1 (Jan. 27, 1955).

TABLE 1.1. THOREX SOLVENT-EXTRACTION-COLUMN CONDITIONS

Column	Pulse Frequency (cycles/min)	Pulse Amplitude (in.)	Column	
			Diameter (in.)	Height (ft)
A, extraction	40	0.75	5	9 extraction, 24 scrub
B, partitioning*	50	0.80	5	59.5
C, strip**	50	0.95	5	46

*The partitioning column is concatenated, consisting of a top section 16.5 ft long, an intermediate section 21.5 ft long, and a bottom section 21.5 ft long.

**The strip column is concatenated, consisting of two 23-ft long sections.

TABLE 1.2. SOLVENT-EXTRACTION LOSSES IN THOREX PROCESS

Column	Loss (% of Element in Feed)	
	Uranium	Thorium
A, extraction	0.03	0.15
B, partitioning	0.59*	0.025
C, strip	0.01	

*This high loss resulted from inadequate solvent scrubbing of the aqueous phase in the bottom section of the column.

calcium and less than 0.1 g per liter each of aluminum, chromium, iron, manganese, nickel, and copper. The gross beta activity of the product was 4.7×10^6 counts/min/ml, of which 5.2×10^5 counts/min/ml was due to U^{233}. The other radioactive contaminants of the uranium products are shown in Table 1.3.

The ruthenium decontamination factor for the thorium product was 3.6×10^3 initially, and it decreased to 30 in later runs. Other decontamination factors were consistent. The uranium contamination of the thorium products averaged 10^{-5} g per gram of thorium. The thorium product solutions contained 354 ppm of contaminants, of which silicon was the most important.

The solvent from the strip column was recovered by contacting it with 0.2 *M* sodium carbonate (aqueous-organic ratio of 1/10) in a pulse column and centrifuging with a continuous water purge to the centrifuge. In the recovered solvent the gamma activity, measured with a scintillation counter, ranged from 75 to 1.6×10^3 counts/min/ml in the last five runs. Solvent losses averaged approximately 1.9% per pass for 14 passes; approximately 0.8% of the loss was due to pump leakage.

The vapors from the evaporation of the unadjusted feed solution, in the feed preparation step, were passed to an acid fractionator. Approximately 13 *M* nitric acid was recovered for re-use in dissolution. In the recovered acid the fission product activities, measured with a scintillation counter, were of the order of 10^6 gross counts/min/ml and were 10^5 counts/min/ml each for ruthenium, zirconium-niobium, and protactinium. The lean acid averaged about 0.1 *M* nitric acid and contained less than 0.001 g of thorium per liter.

Decontamination of the Thorex Pilot Plant. The Thorex Pilot Plant was decontaminated after the first series of radioactive runs in order that equipment repairs and modifications could be made. Information on the relative effectiveness toward Thorex process contamination of several commonly used decontaminating reagents[2] was obtained.

Of the solutions used, 3-20 reagent (3% hydrofluoric acid, 20% nitric acid) was the most effective, but its use was limited because of its corrosiveness. The reagent 20% sodium hydroxide–2% sodium tartrate and the reagent 35% nitric acid were satisfactory, were approximately equally effective, and were noncorrosive; 20% sodium hydroxide–2% sodium citrate and 15% sodium hydroxide–1% sodium oxalate were less effective. The procedure used was alternate recirculation,

[2]A summary of published literature on decontaminating reagents was included in the report by D. O. Campbell, *Decontamination of Stainless Steel*, ORNL-1826 (Feb. 17, 1955).

TABLE 1.3. RADIOACTIVE CONTAMINANTS OF THOREX PROCESS PRODUCTS

Gamma activities: measured with a scintillation counter

Beta activities: measured with standard Geiger-Mueller counter, 10 to 18% geometry

Contaminant	Amount in Product (counts/min/ml)		Decontamination Factors[a]	
	Uranium[b]	Thorium[a]	Uranium	Thorium
Gross gammas	1.6×10^7	4.1×10^6[c]	5.8×10^5	7.7×10^3
Pa gammas	9.4×10^5	1.2×10^6	3.9×10^6	4.4×10^3
Ru gammas	1.5×10^7	2.4×10^6	2.4×10^4	1.5×10^3
Zr-Nb gammas	4.6×10^5	3.9×10^5	4.5×10^6	1.6×10^4
TRE betas	2.3×10^3	3.6×10^4	7.3×10^8	2.0×10^4

[a]Averages of all runs.

[b]Third shipment; mass spectrographic analyses showed 0.0015 wt % U^{232}, 98.78 wt % U^{233}, 1.15 wt % U^{234}, and 0.08 wt % U^{238}.

[c]Thorium product contained 6.7×10^4 Th^{234} gamma counts/min/ml.

at 60°C, of alkaline tartrate and nitric acid for 1 to 3 hr each; the alkaline citrate or alkaline oxalate was sometimes substituted for the tartrate. One vessel, the dissolver, required two additional treatments with 3-20 reagent at 20 to 30°C for 1 hr each to remove contamination held by difficultly soluble thorium.

Radiation levels were reduced from greater than 10,000 to 75 to 150 mr/hr in the feed and extraction systems after ten and eight treatments, respectively; from 2000 to 10 to 50 mr/hr in the partitioning and stripping systems after six and four treatments, respectively; and from 10,000 to 10 to 50 mr/hr in the solvent recovery system after four treatments.

In preliminary laboratory-scale studies, contamination on type 347 stainless steel coupons that had been exposed to the acid-deficient Thorex aqueous waste was about 10 to 15% niobium and 85 to 90% protactinium. Nitric acid gave a decontamination factor of 200 in a 30-min contact with this material. The reagent 10% sodium hydroxide–2.5% sodium tartrate–2.5% hydrogen peroxide was considerably less effective.

Process Development. In further studies on process improvement, ruthenium decontamination factors obtained for the first-cycle solvent-extraction thorium nitrate product were 85 by thorium oxalate precipitation, 100 to 130 by thorium fluoride precipitation, 20 by an additional solvent-extraction cycle, and 510 for the first crop of crystals and 75 for the second crop by recrystallization of thorium nitrate from strong nitric acid solution. On the basis of laboratory work, the thorium oxalate precipitation is recommended for further product purification in lieu of a solvent extraction or other type of second cycle because of its simplicity, the adequate decontamination and the low degree of corrosion obtained, and the suitability of the final form for metal production.

The feed and scrub solution acidities of the last Thorex flowsheet[1] have been modified, on the basis of laboratory work, to minimize thorium losses to the extraction column waste, that is, from 0.2 ± 0.1 *M* acid deficiency to 0.1 *M* acid–0.15 *M* acid deficiency in the feed and from 0.4 ± 0.05 *M* acid deficiency to 0.15 ± 0.05 *M* acid deficiency in the scrub solution. When the modifications were introduced in the pilot plant, losses to the aqueous waste stream averaged 0.15 and 0.03% for the thorium and U^{233}, respectively.

Processing of double-dipped aluminum-silicon-bonded thorium slugs, which will be tested in the Savannah River reactors, will necessitate a caustic dejacketing step and the installation of a filter on the existing equipment. Simultaneous

dissolution of the thorium and aluminum, with fluoride and mercury as the respective catalysts, was not successful because areas of aluminum-silicon remained on the slugs and slowed down the thorium dissolution rate.

An analysis[3] of the importance of the U^{232} daughter activities that will build up in the Thorex thorium and U^{233} products showed that the high gamma activities result mainly from Bi^{212} and Tl^{208}. The Bi^{212} and Tl^{208} are formed from Th^{228}, which is produced by U^{232} decay during the irradiation and pre-Thorex cooling periods. These activities are sufficient to affect U^{233} handling, thorium metallurgy and refabrication techniques, and the pre-Thorex cooling period.

From thorium containing 2000 g of U^{233} per ton, the recovered U^{233} will have a gamma activity, two years after the Thorex separation, equivalent to 185 r/hr at the surface of a sphere containing 1 kg of U^{233}. This activity is much higher than has ever been considered for direct metallurgical operations.

The gamma activity of recycled thorium metal would be 0.083 r/hr at the surface of a 1.36 by 6 in. slug when a 60-day pre-Thorex cooling period is used. This activity is less than that of natural thorium, but recycled thorium metal that has been irradiated to higher U^{233} concentrations and cooled for longer periods before Thorex separation would have a gamma activity much higher than that of natural thorium. The calculated activity for a similar natural thorium slug would be 0.237 r/hr at the surface.

Results indicate that as short a cooling period as is possible (60 days or less) would be mandatory in order to limit thorium activity.

2. RECOVERY OF U^{235}

Process and plant design information is being developed for use in the detailed design and construction of a plant for recovering U^{235} from irradiated enriched Savannah River fuel tubes. A firm chemical flowsheet is being proved on a laboratory scale. Sufficient engineering data are being gathered to size critical items such as pulse columns. The conceptional design will include an engineering flowsheet, sketches of equipment items, and a proposed plant layout.

Feed Preparation. The conventional mercury-catalyzed acidic fuel dissolution flowsheet (see Fig. 2.1) has been adopted for the Savannah River plant. Some consideration was given to caustic dissolution followed by centrifuging of the uranium solids away from the bulk of the aluminum-containing solution, dissolution of the solids in acid, and recovery and decontamination of the uranium by two cycles of solvent extraction and treatment with silica gel to remove residual fission products. The advantages of the caustic fuel dissolution system over the acidic were reduced waste storage requirements and a more compact first solvent-extraction cycle as a result of the high uranium concentration in the feed. However, a comparative cost study indicated that the potential saving in annual waste storage costs of approximately $600,000 for the caustic dissolution process over the acidic was offset by the higher capital, amortized over $6\frac{2}{3}$ years, and operating expenses of the caustic dissolution plant. Thus, the total annual costs of the two processes were approximately the same. The higher costs of the caustic dissolution process result from the more complicated feed preparation system needed for handling enriched uranium solids during the caustic dissolution and feed preparation operations. The questionable economic advantage of the caustic system plus the as-yet-unresolved chemical and development problems, such as high uranium losses during centrifugation, hydrogen evolution during dissolution, and the design and operation of a battery of infinitely safe centrifuges, dictated adoption of the acidic dissolution flowsheet for the Savannah River Plant.

During the early studies on the processing of Savannah River enriched uranium-aluminum fuel elements, trickle dissolution in an infinitely safe cylinder was contemplated. This required cutting and flattening the tubular feed for optimum continuous dissolution, and a remotely operated shearing and loading device was designed to be installed above the dissolver so that small chips and dust would fall into the dissolver. The results of shearing and bending tests on LITR fuel plates indicated that considerable contamination of either air or water would result from this operation. Later studies indicated that partially flooded trough- or slab-type units for batch dissolution

[3] E. D. Arnold, *Formation of U^{233} and the Effects of Its Decay Chain Activity on U^{233}, Thorium, and the Thorex Process*, ORNL-1869 (April 4, 1955).

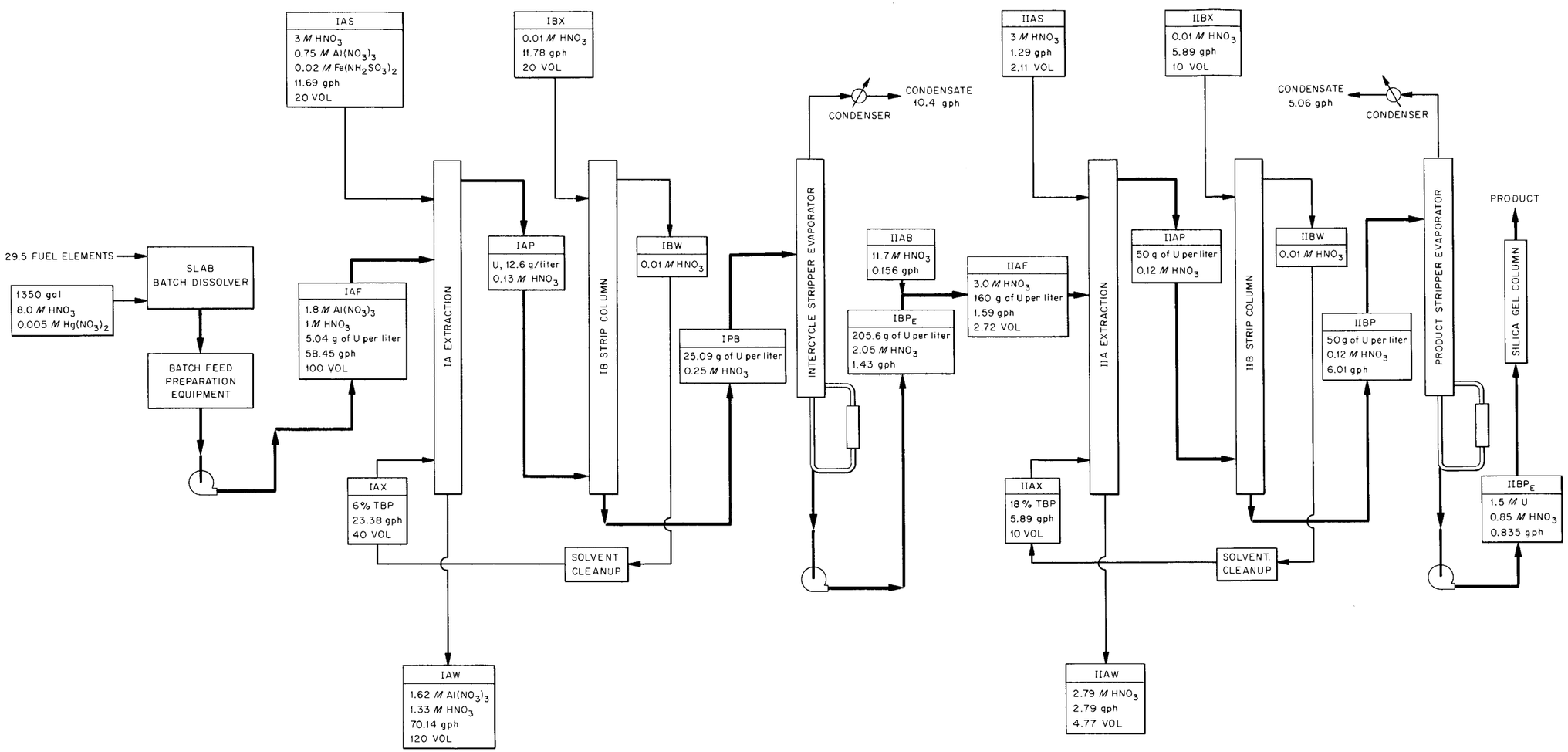

Fig. 2.1. Flowsheet for Recovery of U^{235} from Savannah River Fuel Elements, March 31, 1955.

of complete fuel elements lying in a horizontal position are feasible, and they will be incorporated in the final design instead of the shearing device and continuous dissolvers. Dissolution rates with either set-up appear to be high enough for a day's supply of fuel to be prepared in a few hours, thereby eliminating the necessity of continuous fuel loading to the dissolver.

Plant arrangement concepts now envision location of all equipment except the first-cycle feed centrifuge in a new directly maintained facility. The feed would be clarified, after digestion at reflux temperature for 4 hr in a standard canyon centrifuge, in a cubicle of the existing remotely maintained canyon. The new directly maintained facility will be located adjacent to the existing remotely maintained canyon. Simplification of the dissolution operations by eliminating fuel shearing, a novel magazine fuel tube carrier and charger which eliminated the need for a heavy crane at the processing plant, and the advantages of combining high-activity-level sampling and analytical facilities will be incorporated in the new direct-maintenance facility.

Solvent Extraction. The uranium will be recovered from the digested dissolver effluent containing 1.8 *M* aluminum nitrate, 1.0 *M* nitric acid, 0.005 *M* mercuric nitrate, 3.82 g of uranium per liter (30% U^{235} burnup), hydrated silica, fission products, and trace amounts of plutonium by two cycles of tributyl phosphate extraction in pulsed columns. Remaining fission products will be removed by a silica gel column. The extractant will be 6% TBP in special naphtha No. 1, and the scrub will be 3 *M* nitric acid–0.75 *M* aluminum nitrate containing 0.02 *M* ferrous sulfamate to reduce the plutonium to Pu(III) so that it will not be extracted with the uranium. The organic uranium solution will be cascaded to the bottom of the stripping column, where the uranium will be stripped with aqueous 0.01 *M* nitric acid to give a product containing 25 g of uranium per liter.

This solution will be fed through a steam-stripper to remove dissolved and entrained solvent and will then be continuously evaporated to 192 g of uranium per liter. Nitric acid will be added to the concentrate to yield a second-cycle feed 3 *M* in nitric acid with a uranium concentration of 165 g/liter.

In the second cycle the uranium will be extracted with 18% TBP in special naphtha No. 1 and scrubbed with 3 *M* nitric acid–0.02 *M* ferrous sulfamate to obtain final separation of uranium from fission products and plutonium. The uranium will be stripped from this solvent with 0.01 *M* nitric acid to give a product with a uranium concentration of 50 g/liter. This solution will be steam-stripped and continuously evaporated to a uranium concentration of 1.5 *M*. If this product should be excessively contaminated with zirconium and niobium, they will be removed by adsorption on silica gel.

Dilute acid stripping and intercycle and product evaporation are recommended for the plant. A proposed scheme for eliminating these steps by using a uranium complexing strip of either sodium citrate–sodium acetate or potassium citrate–potassium acetate solution to produce a stripping column product approximately 1 *M* in uranium was shown to be more costly because of higher chemical costs and larger waste volumes. In addition, it was found that the safe operating range for stripping uranium was very narrow, owing to the limited solubilities of the salts in the stripping and/or product streams.

The necessity for digesting and centrifuging the dissolver effluent before feeding it to the first-cycle solvent-extraction columns was shown in experiments in a 0.75-in.-dia extraction-scrub pulse column. When the column was operated with an untreated synthetic feed that was low in acid and contained essentially no mercury, a stringy interfacial emulsion built up in the disengagement section at a rate that would make it necessary to shut down and clean out the column in about a week. When operated with similar feed containing 0.005 *M* mercuric nitrate, the column became inoperable in about 6 hr because of the formation of a frothy emulsion. The emulsion-forming material appeared to be colloidal silica and mercuric sulfamate. When digested feed was used and the scrub was 4 *M* nitric acid instead of 0.75 *M* aluminum nitrate, no emulsion formed in 7 hr.

Two banks of mixer settlers were installed for use in determining the decontamination obtainable under process conditions. In these miniature units the extraction, scrubbing, and stripping steps will be carried out semicontinuously and countercurrently with actual U^{235} solutions of activity approaching plant level. In 0.75-in.-dia-pulse-column tests on the first cycle, with feed obtained by dissolution of Hanford 5% U^{235}–95% aluminum alloy slugs, the gross beta decontamination factor

was 2.7×10^4 when 0.75 *M* aluminum nitrate was used as the scrub. With 3 *M* nitric acid as the scrub, the decontamination factor was tenfold lower. The principal contaminants in the uranium product were ruthenium and rare earths. In batch countercurrent tests on the second cycle, a gross beta decontamination factor of 1.7×10^3 was obtained. The feed in this case was a composite first-cycle product that had had an average decontamination factor of 6.3×10^3, so that the over-all decontamination factor was about 10^7 for the two cycles. The chief contaminant in the second-cycle product was zirconium, which could be adsorbed on silica gel if additional decontamination is needed.

3. HOMOGENEOUS REACTOR SLURRY DEVELOPMENT STUDIES

The immediate objective of the fuel and blanket studies is the development of a slurry for use in the blanket of the HRT. The program includes the demonstration of slurry radiation stability and the acquisition of a sufficient understanding of slurry properties to support the laboratory and engineering development and to assure the success of the thorium blanket experiment. Details of the studies are given in the HRP quarterly progress reports.[4]

More than 3000 lb of thorium dioxide was produced in 160-lb lots for use in large-scale engineering studies. The method used was precipitation of thorium oxalate from the Thorex process thorium nitrate product solution with oxalic acid, and calcination of the oxalate to thorium oxide by heating for 8 hr at 370°C, then for 3.5 hr at 520°C, and then for 5.5 hr at 650°C. In laboratory studies a similar method, with calcination at 370 and 650°C, produced thorium oxide that appeared to be suitable for slurry use. Increasing the final calcination temperature to 750, 900, and 1000°C gave more crystalline oxides, had a negligible effect on the average particle size of 12 μ, increased the density of settled solids (after wet autoclaving at 300°C) from 1600 to 2100 g of thorium per liter, and decreased the nitrogen adsorption surface area from 35.3 to 21.9, 12.3, and 8.3 m^2/g, respectively. Autoclaving the solids in water at 300°C in the presence of 0, 200, 500, 1,000, 2,000, 5,000, and 10,000 ppm of sulfate as thorium sulfate did not promote crystallite growth and had only a slight effect on the bulk density. The pH's of oxide slurries autoclaved at zero sulfate concentration were between 9.2 and 9.5. The pH's of the slurries containing 2,000, 5,000, and 10,000 ppm of sulfate after autoclaving at 300°C were 8.1, 7.0, and 4.1 for the 650°C oxide; 7.1, 6.2, and 3.9 for the 750°C material; and 6.2, 3.7, and 4.0 for the 900°C oxide.

Samples of a thorium oxide slurry containing 1000 g of thorium per kilogram of H_2O become very viscous at room temperature in a Co^{60} source. Slurries of 900 and 650°C calcined oxides with a thorium concentration of 500 g per kilogram of H_2O could not be stirred after 24 hr of irradiation at 300°C in the LITR (flux = 3×10^{13} neutrons/cm^2/sec) but upon recovery appeared to be relatively unaffected by the irradiation. At 300°C in the ORNL Graphite Reactor (flux $= 7 \times 10^{11}$ neutrons/cm^2/sec) an oxide slurry with a thorium concentration of 500 g per kilogram of H_2O showed no viscosity increase. A slurry of the same thorium concentration made from a 92% thorium and 8% U^{235} mixed oxide became viscous, and stirring of one made from a 90% thorium–8% U^{235}–2% copper mixed oxide ceased after less than 24 hr of irradiation. The recovered thorium-uranium-copper oxide was colored green, presumably from reduced uranium, and contained a large amount of lumpy material. Gas pressures in excess of steam of 1000 to 2000 psi were observed in the presence of the thorium-uranium oxide. In the experiment in which copper oxide was present, no excess pressure was observed, indicating that copper-catalyzed recombination of the radiolytic gases was taking place.

The use of a slurry in a thermal breeder reactor without an external recombiner for the radiolytic gases requires that the slurry itself be capable of catalytically recombining at least 4.5 moles of hydrogen and oxygen per hour per liter of slurry at 300°C and under a hydrogen partial pressure of 500 psi or less. In out-of-pile studies on the catalytic recombination of stoichiometric hydrogen and oxygen mixtures, pure thorium oxide slurries showed insufficient catalytic activity for reactor use. The catalytic activity of slurries containing 0.001 to 0.09 *m* copper sulfate plus 0.0025 *m* sulfuric acid varied directly with the copper sulfate concentration and temperature and inversely with

[4]See *HRP Quar. Prog. Reps. Oct. 31, 1954* (ORNL-1813), *Jan. 31, 1955* (ORNL-1853), and *April 30, 1955* (ORNL-1895) (in preparation).

the thorium oxide concentration. Recombination rates at 250 to 300°C and a hydrogen partial pressure of 500 psi in the presence of slurries containing 0.09 *m* copper sulfate with and without sulfuric acid were more than sufficient for use of such slurries in the Thermal Breeder Reactor. Slurries containing 0.08 *m* silver were more effective catalysts than those containing copper and were active at lower temperatures, for example, 185°C.

An electromagnetically operated dash-pot-stirred radiation bomb has been developed. One version utilizes an intermittently activated single solenoid, which permits variation in stirrer operation to be observed on an oscilloscope; another employs a multicoil arrangement which powers the plunger on both the up and down stroke and indicates changes in viscosity by variation in the stirring period at a constant voltage input. A shielded hood for use in the remote opening and handling of the radiation bombs was designed and constructed.

Apparatus for the measurement of surface areas by nitrogen adsorption, for chemisorption studies up to 400°C, and for thermogravimetric studies up to 1000°C were constructed and are in use. Initial studies have shown that the surface areas obtained with oxide from oxalate depend on both the precipitation and calcination temperatures and that oxide burned at 650°C readily adsorbs 2 to 3% water and carbon dioxide at room temperature in laboratory atmospheres.

4. HOPE PROJECT

The objective of the Hope Program is to demonstrate that enriched U^{235} can be recovered from irradiated solid fuel elements at a cost that is compatible with production of economically competitive power from nuclear reactors. Some of the methods of cutting the cost of radiochemical processing will be demonstrated in a high-activity-level processing facility now being designed for construction in an addition to the Metal Recovery Plant.

As a basis for design of this facility, it is assumed that, with the present knowledge of fabrication techniques and processes for separating natural uranium, storage and surge vessels and piping for thermally cold solutions from radioactive processing can be built so as to require no maintenance for five to ten years. In the design, such vessels are housed in a concrete pit below ground level, with removable concrete blocks on top; if maintenance is required, contact methods will be employed. Such items as solvent extraction columns, evaporators, dissolvers, coolers, and condensers are located in a large, central equipment cell, 25 ft deep and partially underground. Equipment that is operated at elevated temperatures or has moving parts (e.g., pumps, process valves, check valves) is equipped with quick-disconnect types of closures which can be manipulated from above the cell. The cell will be flooded with shielding water for maintenance and/or operation. Concrete slabs on top will serve as shielding when the cell is operated dry. Equipment such as pumps, pulsers, and centrifuges are in an underground flooded cell with open top, the water serving as shielding during both operation and maintenance. Most of the equipment located in this cell will be installed in duplicate and will be provided with means of quick remote removal and replacement. It is intended that failure of any piece of this equipment, other than pulsers, shall not interrupt processing.

Design data for the first-cycle solvent-extraction pulse columns were calculated. Concatenated columns will be used because of limited head room. The columns are designed for a uranium processing rate of 1000 kg/day, with irradiated natural uranium as the feed (Purex process).

Developments in the fuel element dissolution study program (Sec. 5) are closely related to the Hope Project.

Underwater Maintenance. Simulated contaminated water from an underwater Hope-type facility was decontaminated by gross beta and gamma factors of approximately 1500 and 450, respectively, by passage through a cation- and an anion-exchange medium (Dowex 50 and Dowex 2), followed by scavenging with ferric hydroxide, 0.01 g/liter. The beta decontamination obtained by ion exchange alone was 500, and the gamma, 220.

Three remote disconnects were assembled and were leak-tested in air. A Unibolt coupling with a metal seal ring was leak-tight at 20 ft-lb torque on a $\frac{3}{8}$-in. bolt. A ground joint coupling with a Marman V-band and a flanged coupling with a corrugated stainless steel gasket were leak-tight in air, but neither is recommended for remote underwater maintenance because of assembling difficulties.

Radioactive Waste Storage. The Hanford and the Savannah River procedure of neutralizing radioactive nitric acid–aluminum nitrate wastes yields solutions that cannot be volume-reduced before storage because of the high salt content. In preliminary experiments, removal of the nitrate ion by destructive distillation prior to the addition of sodium hydroxide permitted a waste volume reduction of at least 1.7. Such a reduction in the Savannah River 25 process waste (see Sec. 2), estimated at 551,000 gal annually, would lead to a saving of up to $284,000 per year at an estimated $1.25 per gallon for waste storage. In initial tests, corrosion was severe, and the cost of operation and construction of suitable evaporation equipment would have to be charged against the saving.

Continuous Slug Charger. A new type of hopper, from which slugs are pushed by a plunger, was designed for use with a continuous dissolver (see Fig. 4.1). By means of a wheel and sprocket, the carrier tube moves upward through the hopper, picks up a slug, and carries it to the feed tube, where the plunger ejects it from the carrier. As each slug is deposited in the feed tube, the top slug in the feed tube is displaced and falls into the dissolver by gravity. The dog at the bottom of the feed tube automatically falls into place and prevents the slugs from slipping backward. Slugs may be stacked in the hopper at random. The device is capable of handling up to 12-in. lengths of cylindrical slugs. Construction of a test unit is scheduled for completion by June.

ORNL Sampler. The ORNL hypodermic needle type of sampler[5] is being modified for use in the first extraction cycle in the Hope installation. A small CWS type of filter has been placed ahead of the jet exhaust to prevent passage of radioactive aerosols and particles into the pressure-vent-regulator system. The efficiency of the filter installation has not yet been tested. The design of the sampler is being modified to accommodate other types of de-entrainers, for example, the York demister, and sampling heads.

Pumping Devices. Both an air lift and a pulse-pumping device were demonstrated to be satisfactory for pumping metered radioactive liquid. Either method should significantly reduce maintenance and installation costs over those of mechanical pumps because of the elimination of either moving parts or the need for gravity cascading of liquids between columns. The air lift studied was of the conventional type. Maximum flow deviation was ±5%, air demand was low, and air contamination was slight. The pulse-pumping device consists of check valves in the lines between pulse columns which make it possible to use the pulse energy of the columns to obtain intercolumn flow.

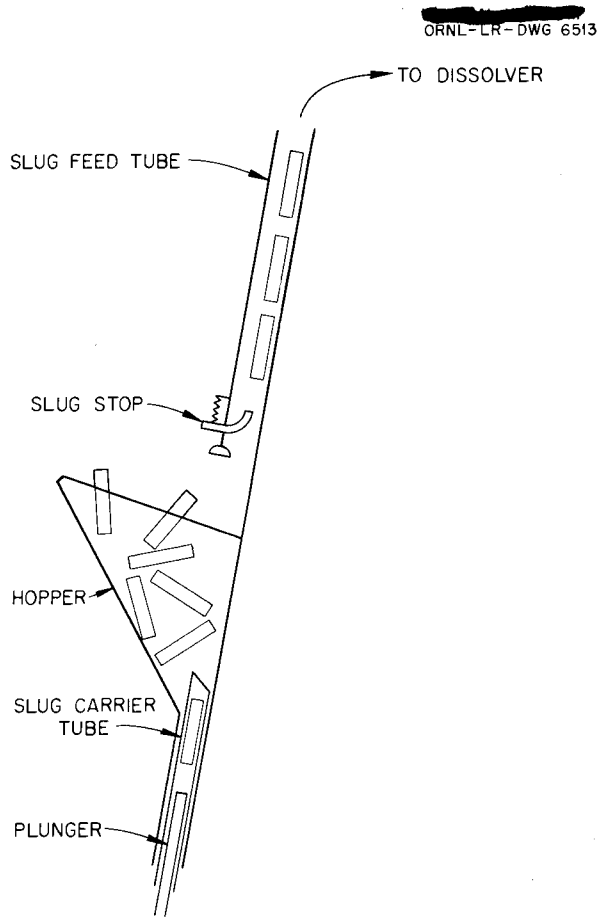

Fig. 4.1. Schematic Diagram of Hope-Design Continuous Slug Charger and Hopper.

5. FUEL ELEMENT DISSOLUTION STUDIES

Methods currently in use for processing solid fuel elements to recover fissionable material require dissolution of the elements in an aqueous medium. Batch dissolution of natural uranium or enriched uranium-aluminum alloy slugs requires large-capacity equipment. Acidic dissolution of

[5] H. G. Duggan and J. W. Landry, *Nucleonics* 12(11), 67–69 (1954).

jacketed-uranium or uranium-aluminum alloy slugs produces large volumes of waste. Also, corrosive chemicals, for example, boiling sulfuric acid, are required for dissolution of stainless-steel-clad and other power reactor fuel elements. In the programs to develop better and more economical procedures for dissolving reactor fuel elements, for subsequent aqueous processing schemes (a possible dissolution procedure for use with nonaqueous processing schemes in discussed in Sec. 6), a pot-type continuous dissolver for natural uranium slugs was investigated, and an automatic mechanical slug dejacketer was designed. Further studies were made on acidic and caustic dissolution for use with enriched uranium-aluminum alloy slugs. Noncorrosive dissolvents for power reactor fuel elements were studied.

Natural Uranium Slugs. Operation of a pot-type dissolver so that there was a continuous flow of the dissolvent into the bottom and of the slug solution out the top was investigated for use with natural uranium slugs. This would be more convenient and would give a more uniform product than the trickle type[6] developed for use with enriched uranium-aluminum alloy slugs, where criticality considerations restrict the dissolver dimensions.

In a 60-liter overflow dissolver, with a 32-liter holdup, unirradiated aluminum-jacketed natural uranium slugs (Savannah River type) were continuously dissolved at uranium dissolution rates of 40 and 20 kg/day with water boilup rates of 9 and 40 lb/hr, respectively. In each case the product could be easily adjusted to Purex process feed uranium and nitric acid concentrations. The dissolvent was 8.25 to 10 *M* nitric acid containing 0.005 *M* mercuric nitrate. Operation of the 600-gal Metal Recovery Plant dissolver in this way also gave a satisfactory product at a uranium dissolution rate of 500 kg/day, which is approximately twice the batch rate. In both batch and continuous operation the off-gas system was the limiting factor; with a different off-gas system it is thought that rates might be considerably higher.

Mechanical Dejacketer. An automatic mechanical dejacketer for aluminum-jacketed irradiated natural uranium slugs was designed (see Fig. 5.1) to operate under water. The slug is pushed through

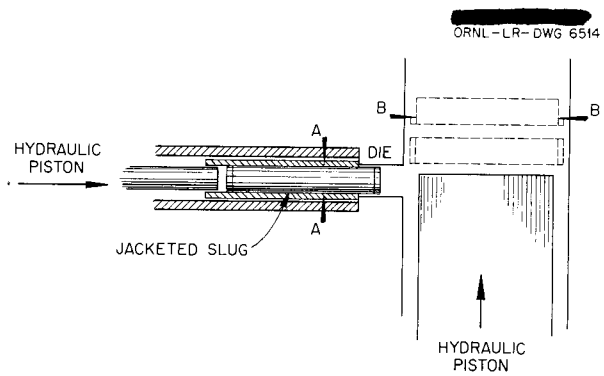

Fig. 5.1. Schematic Diagram of Slug Dejacketer. The slug jacket is scored by knife edges A and removed by the die. The end caps are removed by knife edges B.

a guide sleeve containing knife edges and then through dies which strip the jacket from the body. The slug is then passed through a channel in which a spring-operated device presses the ends against the knife edges in such a way that the softer end caps, which vary in thickness, are sheared from the harder uranium core without significant loss of uranium. With slugs on which close tolerance is maintained in the end cap thickness, the spring-loaded device will probably not be needed. A model is being constructed.

Enriched Uranium-Aluminum Alloy Slugs. *(1) Acid Dissolution.* In batch laboratory-scale studies of the mercury-catalyzed dissolution of 5 to 15% uranium-aluminum alloy slugs in nitric acid, the dissolution rate was independent of the uranium concentration. The optimum nitric acid concentration was dependent on the metallurgical history of the metal. When the side area of the piece of metal being dissolved was large compared with the end area, as with whole slugs, the optimum nitric acid concentration was 7 to 8 *M* with either 0.002 or 0.005 *M* mercuric ion. At Hanford,[7] the optimum nitric acid concentration was 4 to 5 *M* for dissolution of thin slices from 7.5% uranium (NP) slugs, where the side area was small compared with the end area. In all experiments, as has often been observed, cast alloy dissolved much less uniformly than extruded alloy, and the rate was only 75 to 80% as fast as that for the extruded alloy.

[6] *Chem. Tech. Semiann. Prog. Rep. Sept. 30, 1954*, ORNL-1800, p 23.

[7] R. E. Burns and C. H. Holm, *Nitric Acid Dissolution of Uranium-Aluminum Alloy*, HW-18414 (Aug. 12, 1952).

A semiempirical equation was developed which, it is hoped, will permit qualitative or semiquantitative predictions, from batch rate data, of the acid concentration profile of dissolver columns in which large volumes of water or dissolvent are continuously removed by evaporation. The equation is

$$\frac{dx}{d[HNO_3]_x} = \frac{C}{k'}\frac{FR}{R_x}\exp\frac{-[HNO_3]_x}{Cy},$$

where x is the distance from the top of the column, $[HNO_3]_x$ is the acid concentration at point x in the column, FR is the acid feed rate, R_x is the specific reaction rate at x, and C, k', and y are constants for a particular column and reaction stoichiometry.

(2) Caustic Dissolution. Chemical and x-ray analyses of the product uranium solids from continuous caustic dissolution of unirradiated uranium-aluminum alloy in a 1-in.-i.d. laboratory trickle dissolver showed that they contained up to 25% of the uranium as UAl_3 intermetallic compound and the remainder as UO_2 hydrate. The ratio of UAl_3 to UO_2 varied with the dissolvent caustic concentration and feed rate. In batch dissolvings the uranium was present only as the oxide.

The use of the hydroclone was unsatisfactory as a method of separating the uranium solids from the alkaline solution. The solids from hot 3 *M* sodium hydroxide–3 *M* sodium aluminate to which 1.9 g of synthetic fission products, equivalent to 20 to 30% burnup, had been added were concentrated only from 4.5 to 4.8 g of uranium per liter. Attempts to increase solids separation with scavengers were not promising.

About 99.9% of the radioactive fission products, except cesium and iodine, followed the solids separated after a caustic dissolution of a nine-month-cooled uranium-aluminum wafer from a 14% burned-up Hanford J slug; only about 0.1% of the cesium and iodine remained with the solids. These results confirm those reported previously[8] for fission-product-spiked solutions of unirradiated slugs.

(3) Caustic Nitrate Dissolution. In the 1-in.-i.d. trickle dissolver, unirradiated 5 to 15% uranium-aluminum alloy slugs were dissolved with sodium hydroxide to which sodium nitrate had been added to suppress hydrogen evolution. The dissolution rate with 6 *M* sodium hydroxide–3 *M* sodium nitrate was 1.6 times that with 6 *M* sodium hydroxide alone. The solid product was initially black, probably a mixture of UAl_3 and UO_2 hydrate, but, when digested, it quickly changed to a yellow solid having the crystal structure of sodium diuranate.

Power Reactor Fuel Elements. *(1) Stainless-Steel-Clad Elements.* Reagents, for example, boiling sulfuric acid, now in use for dejacketing stainless-steel-clad fuel elements are very corrosive. Carburization of stainless-steel-clad uranium dioxide fuel plates, such as those proposed for the Army Package Power Reactor and the Submarine Reactors, and dissolution of the iron and nickel in noncorrosive copper sulfate, followed by dissolution of the uranium dioxide in nitric acid, were shown previously[9] to be feasible. In further studies on this process, increasing the carbon from 2 to 3% followed by careful annealing made it possible to eliminate the copper sulfate dissolution step and to dissolve the bulk of the iron and nickel and the uranium dioxide in nitric acid. Chromium carbide, and to a lesser extent iron carbide, tended to remain insoluble in both procedures, and the unfiltered supernatant, with minor adjustments, was satisfactory as feed to a tributyl phosphate solvent extraction process. The volume of radioactive waste to be stored from this process is less than that from either sulfuric acid or copper sulfate dissolution, and sulfate ions are not introduced into the product.

(2) Uranium–Zircaloy-2 and Uranium-Molybdenum Alloy. Uranium–Zircaloy-2 (1.5% tin, 0.1 to 0.15% iron, 0.1% chromium, 0.05% nickel, >0.006% nitrogen, balance zirconium) alloy fuel elements have been proposed for a number of reactors, such as the Submarine Thermal and Intermediate and Power Water Reactors. In initial experiments oxidation at 1000°C yielded zirconium oxide in the form of a granular powder containing the uranium, 65 to 95% of which was recovered by simple nitric acid leaching.

Rods of 88% uranium–12% molybdenum sheathed with Zircaloy-2, over-all diameter of 0.3 in., are proposed as blanket elements in the Power Water Reactor. A suggested method for reprocessing these elements is shearing them into 1-in. lengths

[8] *Chem. Tech. Semiann. Prog. Rep. Sept. 30, 1954,* ORNL-1800, p 25.

[9] *Ibid.*, p 26.

and dissolving the core alloy with nitric acid, in which it is readily soluble. In preliminary studies the alloy dissolved in 4.0, 8.0, and 12.0 *M* nitric acid at rates of 0.26, 0.19, and 3.7 mils/min, respectively. The Zircaloy-2 jacket would not dissolve and could be stored as a waste solid.

6. VOLATILITY STUDIES

The purpose of the volatility program is to study the separation of uranium and plutonium from fission products by utilizing the differences in the volatilities of their fluorides. The results of these studies could be applied in the development of a nonaqueous method of fuel processing.

A formal report has been prepared[10] on preliminary studies of conversion of metals to the fluoride and dissolution of the resulting fluoride in a fused fluoride salt bath in the presence of HF. The results indicate that fused fluoride–HF dissolution of several nuclear reactor fuel elements, such as U^{235}-zirconium and U^{235}–stainless steel, is feasible. Such a dissolution followed by volatilization with fluorine of the UF_6 formed may be an economically attractive method of processing fuel elements.[11]

Although the variables have not been extensively investigated, those thought to have the most effect on the dissolution rate are composition of the fused fluoride salt bath, temperature, HF flow rate, metallurgical characteristics of the metal being dissolved, and the presence of other metals.

In a 44.5-48.5-7.0 mole % ZrF_4-KF-NaF molten salt bath through which HF was being passed at 675°C, typical penetration rates for metals were as follows:

	Rate (mils/hr)
Type 304 stainless steel	4
Type 347 stainless steel	7
Thorium	14
Uranium	17
Zirconium	22–35
Titanium	31
Zircaloy-2	22–46

The low penetration rate for nickel, approximately 0.001 mil/hr, indicates that it is suitable as a material of construction for equipment to be used in such processes.

When irradiated uranium metal was dissolved with HF in 55.5-44.5 mole % NaF-ZrF_4 at 650°C, the volatilized UF_6 was contaminated with a small amount of fission product fluorides, chiefly niobium. Either the volatile fluorides of the other fission products (IF_7, MoF_6, TeF_6, RuF_5) are not formed in significant amounts or they are held in the fused state.

7. HOMOGENEOUS REACTOR FUEL AND BLANKET REPROCESSING[12]

The purpose of the homogeneous reactor fuel and blanket reprocessing program is to develop chemical processes for the removal of fission and corrosion products from fuel solutions, which is essential to economic operation, and for removal and decontamination of fissionable materials from the blanket. Cost studies were made on the proposed HRT fuel process, and design of the processing plant is under way. Laboratory-scale studies were made on plutonium dioxide solubility and suspension under blanket conditions in the Plutonium Producer Reactor. Preliminary tests were made on dissolution of thorium oxide to determine the feasibility of processing the Thermal Breeder Reactor blanket by the Thorex process.

Costs. More detailed studies[13] than those reported previously[14] indicated that the chemical processing associated with a two-region thermal breeder (K-23) reactor can be carried out at a cost of 1.06 mills per kilowatt-hour of electricity produced, exclusive of reactor inventory charges. The processing scheme considered consists in removing the insoluble fission and corrosion products from the uranyl sulfate core solution at high temperatures by a solid-liquid centrifugal

[10] R. E. Leuze, G. I. Cathers, and C. E. Schilling, *Dissolution of Metals in Fused Fluorides*, ORNL-1877 (in press).

[11] Preliminary studies on this method of processing are being reported by G. I. Cathers and M. R. Bennett, *A Fused Salt–Volatility Process for Recovery and Decontamination of Uranium*, ORNL-1885 (in press).

[12] See *HRP Quar. Prog. Reps. Oct. 31, 1954* (ORNL-1813), *Jan. 31, 1955* (ORNL-1853), and *April 30, 1955* (ORNL-1895) (in preparation).

[13] E. D. Arnold, A. T. Gresky, R. J. Klotzbach, and A. R. Irvine, *Preliminary Cost Estimation: Chemical Processing and Fuel Costs for a Thermal Breeder Reactor Power Station*, ORNL-1761 (Jan. 27, 1955).

[14] *Chem. Tech. Semiann. Prog. Rep. Sept. 30, 1954*, ORNL-1800, p 13.

separator on a one-day cycle and in removing the soluble fission and corrosion products from the core solution on a 190-day cycle. This core solution will be combined with the thorium oxide slurry from the blanket, which will be processed on a 320-day cycle, in a 200-kg/day Thorex plant. This estimate was based on a three-reactor power station producing 1350 Mw of heat. Inventory charges for D_2O and U^{233} in the reactor would increase the total costs to $12.26 per megawatt-day of heat, or 2.19 mills per kilowatt-hour of electricity. The reactor-core neutron poison that results from fission and corrosion products will be held to a level of less than 5.4%. The total fixed investment cost for the Thorex plant will be $5,798,300, and the annual operating cost will be $1,290,100.

HRT Fuel Reprocessing. A fuel processing plant will be operated in conjunction with the HRT to demonstrate the continuous removal of fission and corrosion products from the HRT fuel solution. Engineering and detailed equipment design for this plant is under way, and installation is scheduled to be completed by January 1956.

The plant will be designed to process through a single-stage hydroclone solid-liquid separator a slip stream of 0.2 to 0.3 gpm from the main circulating stream, 400 gpm, of the reactor. The hydroclone system, which will operate at 2000 psi and 300°C, will divide the stream into an overflow and an underflow. The solids will concentrate in the underflow, and the overflow will be returned to the reactor system.

It will be necessary to operate the hydroclone system only two days each week to maintain the neutron poisons in the fuel solution at a level of about 5%. After each two-day run the system will be isolated from the reactor, cooled to 90°C or below, and the contents dumped into a tank for decay and concentration of fission products and eventual uranium recovery. A very small amount of heavy water will remain with the uranium–fission-product concentrate and will be lost in the uranium recovery process.

The processing plant is unique in that it contains only one piece of moving equipment, a canned-rotor pump, which provides circulation through the hydroclone. The remainder of the fluid transfer is by gravity flow and by the pressurization of the vessels that results from heating the fluid in them. Provision will be made for taking samples in each run and of the composite materials. In addition, the plant will be used to add fresh fuel to the reactor system.

Engineering Developments. A second loop, loop B, was designed, constructed, and installed for use in the dynamic study of the chemistry of fission product precipitation and removal from fuel solution. Loop A, which was described previously,[12,14] operates at lower temperatures and pressures. Loop B can simulate reactor conditions to the extent of temperature cycling the loop contents through 50°C and can operate at temperatures up to 300°C and pressures up to 2000 psi.

Loop B is made of $\frac{3}{4}$-in. schedule 80 pipe and contains a canned-rotor pump and a heater, heat exchanger, and cooler. A side stream can be drawn off and circulated, by means of a second canned-rotor pump, through a hydroclone. Both the underflow and overflow from the hydroclone can be returned to the main part of the system, or the overflow can be returned to the main loop while the underflow is withdrawn from the system. Flow is controlled by controlling the speed of the canned-rotor pumps with a variable frequency current source.

In experiments with loops A and B, rare-earth precipitates collected on the walls of the heaters, indicating their affinity for hot surfaces. A new loop, B-2, is therefore being designed for studying rare-earth precipitation and behavior at temperatures around 300°C without the presence of a surface hotter than the solution itself. It will be heated by an over-sized pump operating at a low mechanical work efficiency so that a considerable portion of the power input appears as heat in the solution being pumped.

Solid Liquid Separators. Studies with the 0.25-in.-dia hydroclones for continuously removing suspended solids from the fuel showed gross separation efficiencies greater than 70% with a feed material of ThO_2 particles suspended in water where 100% of the particles were less than 2 μ. The densities and viscosity of the ThO_2-water system make it approximately equivalent to a rare-earth–fuel system. The main variable affecting hydroclone performance was the pressure drop across the hydroclone from feed to overflow; variations in the underflow–feed-flow ratio, underflow orifice size, and length of cone have significant effects, while the orientation of the clone has no effect.

Chemical Developments. Data obtained from loop A operation indicate that the solubility of neodymium sulfate is 0.02 to 0.03 g per kilogram of H_2O at 285°C in the fuel solution of a two-region thermal breeder reactor. This amount of neodymium in solution will contribute about 0.2% neutron poison to the reactor. In none of the three loop runs made with neodymium sulfate was a significant amount of insoluble neodymium found in the main circulating stream. Some of the neodymium sulfate precipitated on and adhered to hot metal surfaces in the loop. The remaining insoluble neodymium sulfate collected in stagnant and low-velocity regions of the loop.

In both laboratory and loop tests, neodymium sulfate was adsorbed on Zircaloy-2 that was at a higher temperature than the solution. This adsorption was 40% of that on stainless steel under the same conditions. There was no adsorption from unsaturated solutions or on surfaces at the same temperature as the solution.

In out-of-pile experiments (carried out partly by the Vitro Corp.) with I^{131} tracer, from 90% to more than 99% of the iodine present was removed from a simulated fuel solution containing iodine in various oxidation states by contacting the vapor above such solutions at 250 to 300°C with metallic silver. Starting concentrations of iodine ranged from 10^{-1} to 10^{-4} g per kilogram of H_2O. In in-pile experiments, as much as 90% of the iodine was removed.

In stainless steel equipment and with an oxygen overpressure at 275°C, the rate of reduction of periodate was too rapid to measure with present techniques. An iodate reduction half-time of 2 to 4 min was measured at 250°C.

Plutonium Producer Blanket Processing. The scheme proposed for processing the uranyl sulfate solution blanket of the plutonium producer, in order to minimize Pu^{240} buildup, consists essentially in concentrating the precipitated PuO_2 by a hydroclone liquid-solid separator and removing the concentrated slurry for D_2O and plutonium recovery.

The time required for plutonium to precipitate after being formed and the equilibrium solubility (~3 mg per kilogram of H_2O) determine the amount of dissolved plutonium in the blanket. Experimental data obtained in a titanium vessel under simulated reactor conditions, but with no neutron flux, indicate that supersaturation in the blanket will not be greater than 0.3 mg per kilogram of D_2O. The rate of precipitation of PuO_2 from 1.4 *m* uranyl sulfate solution at 250°C in a titanium vessel was not affected by the valence of the plutonium added or by the addition of 100 mg of nickel or iron per kilogram of H_2O to simulate corrosion products. The amount of plutonium in solution after 30 min was increased by factors of 2 and 3 in the presence of 20 and 100 mg of chromium per kilogram of H_2O, respectively. The valence of the iron or chromium had no effect. The rate of precipitation of PuO_2 in a stainless steel vessel that had been conditioned with UO_2SO_4 under oxygen at 250°C was slower than in the titanium vessel, and approximately twice as much plutonium remained in solution after 30 min.

In a 0.25-in.-dia hydroclone approximately 50% of the plutonium dioxide suspended in water at room temperature was concentrated in about 20% of the volume in a single pass. Preliminary results indicate that the separation efficiency may be influenced by the conditions under which the precipitation took place.

In a series of experiments designed to study the adsorption of plutonium on materials of construction, a type 347 stainless steel container adsorbed 0.80 mg/cm^2 and two titanium vessels adsorbed about 1.0 mg/cm^2 with no indication that equilibrium had been reached. Plutonium adsorption on zirconium reached an equilibrium value of 0.05 mg/cm^2. These values represent approximately 60% of the total plutonium processed in the stainless steel tube, 50% in the titanium tubes, and 12% in the zirconium.

From the results of experiments made to date, the Pu^{240} in the plutonium producer blanket product was roughly estimated to be 0.8% of the total plutonium. About half the Pu^{240} will be formed from Np^{239}, which by neutron capture gives Np^{240}, which decays by beta emission to Pu^{240}, and the other half will be formed from Pu^{239} by neutron capture. It therefore appears that a process for continuous removal of neptunium from the blanket will be desirable.

Thermal Breeder Blanket Processing. At the present time the most obvious method of processing the thorium dioxide blanket is to recover the heavy water by evaporation and to dissolve the thorium dioxide as feed for the Thorex process. Thorium dioxide was dissolved by refluxing for 1 hr in a 30% excess of 8.0 *N* nitric acid containing 0.04 *N*

hydrofluoric acid. After 4 hr, complete solution had not been obtained in 16 *N* nitric acid in the absence of hydrofluoric acid. The dissolution rate was increased by increasing the hydrofluoric acid concentration in the range up to 0.1 *N* or by increasing the nitric acid concentration. Thorium dioxide calcined at 1000°C requires longer to dissolve than material calcined at 650°C.

In a series of scouting tests, 12 *N* sulfuric acid was the most effective reagent for leaching protactinium from irradiated thorium dioxide.

Decontamination of the HRE. It was reported previously[15] that parts of the HRE system removed after decontamination were descaled by oxalic acid but that the corrosion film had been modified considerably by the decontamination treatment. Two pieces of an HRE in-pile corrosion loop, on which the corrosion scale had not been modified by previous treatment, were descaled and decontaminated with 5% oxalic acid at 90°C. Descaling was essentially complete in 8 hr or less, and the corrosion during descaling was about 0.1 mil. The steel was decontaminated with respect to fission products by a factor greater than 50. The oxalic acid was effectively destroyed by adding hydrogen peroxide and heating, yielding a solution that could be evaporated to a very small volume before storage, since most of the remaining solids are the corrosion products.

8. WASTE METAL RECOVERY

The ORNL Metal Recovery Plant is now serving as a production plant for the separation and recovery of uranium, plutonium, and other valuable materials in support of the AEC research and production programs. An addition to the Metal Recovery Plant, which is now being designed, will be used for large-scale testing of high-activity-level processes (see Sec. 4).

Plutonium Recovery. A terminal report on the recovery of about 67 kg of plutonium and 10 g of americium from Hanford metallurgical waste was prepared.[16]

Americium Recovery. Shipment was made of the 5 g of americium separated from Hanford metallurgical waste for the University of California Radiation Laboratory at Livermore. Analysis at Livermore of the first gram, which was separated from lanthanum by hydrochloric acid elution from a Dowex 50 cation-exchange resin column, showed that it contained about 0.25 g of lanthanum instead of 2 g, as indicated by preliminary analyses.[17] About 4.2 g of americium was separated from lanthanum by elution from Dowex 50 cation-exchange resin with 0.15 *M* citric acid–0.10 *M* diammonium citrate–0.3 *M* ammonium nitrate to complete the 5-g commitment. The americium products of the citrate elution were precipitated with sodium hydroxide, dissolved in excess hydrochloric acid, and run through an anion-exchange column to remove iron and plutonium. The chief impurity in this material was yttrium (about 10%), and there was about 1% of each of several rare earths. No lanthanum could be found. The citrate elution gave a better separation from lanthanum and a more concentrated product than did the hydrochloric acid elution. Of the 10 g of americium recovered from the Hanford waste by the Amex process, the rest has been separated from lanthanum by citrate elution and is now being further purified. A terminal report on the Amex program is being prepared.[18]

Clementine Reactor Fuel Processing. The recovery of plutonium and americium from the Los Alamos fast breeder reactor (Clementine) fuel elements was completed on October 15, 1954. Thirty-three fuel elements were processed, and 14.7 kg of plutonium and 0.2 g of americium were recovered.

Brookhaven Reactor Fuel Processing. The metal recovery equipment was altered for use in the Brookhaven reactor fuel processing program and for subsequent programs. A pneumatic ram system to continuously charge slugs to the dissolver was installed, and the dissolver, a 500-gal tank, was converted to a continuous dissolution system. The acid recovery system was improved by installation of new evaporators for the first- and second-cycle extraction-column waste solutions and a new acid still; the old acid still was converted to a stripper-evaporator. A second uranium cycle was tied into the solvent-extraction system.

[15] *Ibid.*, p 14.

[16] R. E. Brooksbank, J. L. Matherne, and W. R. Whitson, *Terminal Report on the Recovery of Plutonium and Americium from Hanford Metallurgical Waste in the ORNL Metal Recovery Plant*, ORNL-1850 (Feb. 16, 1955).

[17] *Chem. Tech. Semiann. Prog. Rep. Sept. 30, 1954*, ORNL-1800, p 5.

[18] D. O. Campbell, *The Separation of Americium from Lanthanum*, ORNL-1855 (in preparation).

In the Brookhaven program, depleted uranium fuel elements containing about 13.5 tons of uranium and 3.3 kg of plutonium are being processed by a Purex flowsheet. About half the fuel elements were irradiated at a level of 50 to 100 Mwd/ton, and the remainder was irradiated at 400 to 450 Mwd/ton. The plutonium is being shipped to the Rocky Flats site for further processing. The uranium product, 2 *M* uranyl nitrate solution, is being shipped to Y-12 for conversion to oxide. The program is scheduled for completion April 15.

Operation of the continuous dissolver was satisfactory. Nitric acid (8.5 to 10 *M*), containing 0.005 *M* mercuric nitrate catalyst for dissolving the aluminum jackets, was added continuously to the dissolver, and fuel elements were added periodically. The temperature of the dissolver was maintained at 108°C (boiling temperature). Solution was pumped off at a constant rate to an intermediate feed hold tank. At equilibrium and with a calculated metal heel of 1100 lb in the dissolver, 1000 lb of uranium per day was dissolved. The resulting solution contained about 360 g of uranium per liter and 2.0 *M* nitric acid. This solution was satisfactorily processed by the Purex flowsheet.

PART II. RAW AND FEED MATERIALS STUDIES

The purpose of the raw and feed materials studies is to find more economical methods of producing uranium hexafluoride or uranium and thorium metals from crude concentrates. Processes discussed here which could effect significant savings in costs are the following:

1. application of the Higgins continuous ion-exchange contactor in extracting uranium from unclarified ore leach liquor,
2. the Fluorox moving-bed process for reducing, hydrofluorinating, and oxidizing a uranium concentrate to uranium hexafluoride,
3. the Excer electrolytic process for converting uranyl nitrate to uranium tetrafluoride,
4. the Metallex sodium amalgam reduction process for converting thorium and possibly uranium salts to metal,
5. the Monex solvent extraction process for recovering thorium from rare-earth–depleted monazite sand sludge.

A possible flow diagram for recovering uranium from ore and converting it to metal is

Ore leach pulp ⟶ Higgins ion-exchange contactor ⟶ Fluorox process ⟶ Metallex Process ⟶ Uranium metal

9. METALLEX PROCESS

The Metallex process was developed for economical production of thorium metal from refined or crude thorium compound concentrates. The process steps include preparation of thorium tetrachloride, reduction of thorium tetrachloride with sodium amalgam to form thorium amalgam, and separation of the thorium metal from the amalgam. In small-scale operations, 25 lb of thorium metal satisfactory for metallurgical processing to bar stock has been produced from thorium nitrate. As a result of further development work, the previously published[1] flowsheet has been simplified. Some studies have been made on developing a similar process for uranium production.

Thorium Production Flowsheet Modifications. Direct chlorination of thorium oxalate, prepared from thorium nitrate has been adopted as the interim method of producing thorium tetrachloride. The equipment required is relatively simple, and the temperatures at which the process operates are lower than those of the denitration-carburization scheme considered earlier. The economics of the two schemes are being studied prior to selection of a production method.

In the flowsheet now under study (see Fig. 9.1) the sodium amalgam reductant is contacted with the thorium chloride in the dry state rather than in propylene diamine solution. A hydraulic filter press, which gives a product that is more concentrated than that given by a centrifuge and/or filter, is under study for concentrating the quasi-amalgam product of the reduction. A retort furnace for evaporating the mercury is recommended instead of the vacuum-remelt furnace.

Production of Thorium Tetrachloride. An induction furnace for studying the kinetics of thorium tetrachloride production was designed and constructed. It consists of a graphite crucible, 2.75 in. dia by 6 in. high, surrounded by a fused silica envelope. The charge is placed in the crucible, and gaseous reagents are admitted through the perforated bottom. The chlorination temperatures of 800 to 900°C obtained when a thorium oxide–carbon mixture is used as the starting material are permissible in the reaction zone. When thorium oxalate is the starting material, chlorination temperatures are between 500 and 600°C.

An improved and larger furnace, 4.5 in. dia by 10 in. high, has been constructed and is now being evaluated. A Hastelloy C condenser, designed to operate at about 400°C, can be fitted to the top plate of the furnace for sublimation of the thorium tetrachloride. Sublimation of the product is not necessary when the starting material is thorium oxalate.

Direct Chlorination of Thorium Oxalate. In studies in the smaller furnace, thorium oxalate that had been prepared from thorium nitrate was chlorinated directly. Thorium tetrachloride was formed,

[1] *Chem. Tech. Semiann. Prog. Rep. Sept. 30, 1954*, ORNL-1800, Figs. 10.1 and 10.2.

ORNL-LR-DWG 6515

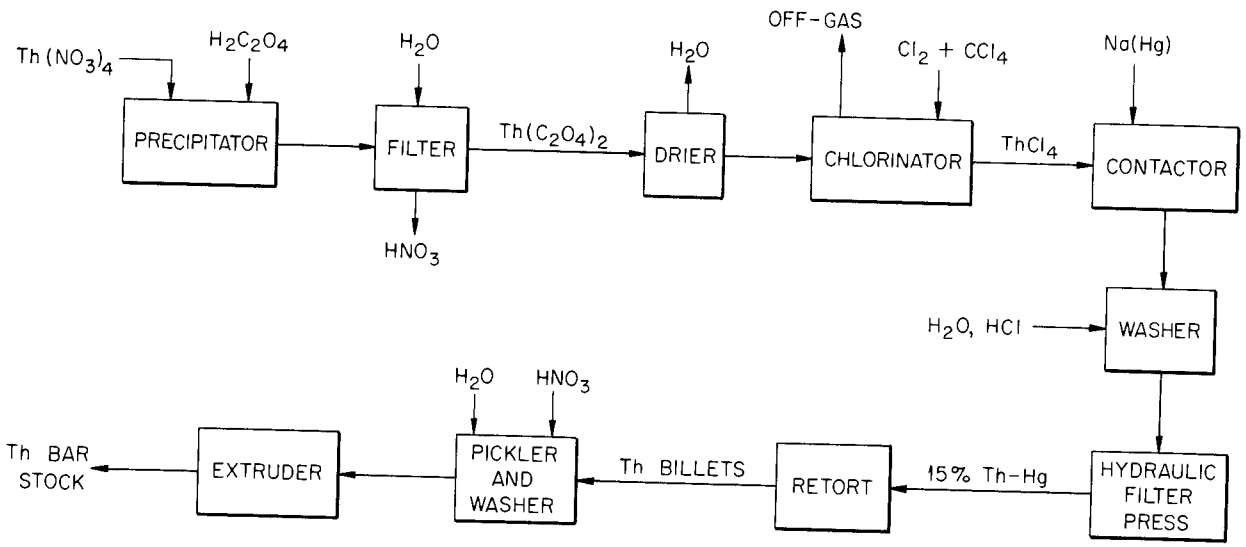

Fig. 9.1. Metallex Process Flowsheet, March 31, 1955.

in greater than 99% yield, as an anhydrous, friable, crystalline powder. A 20 to 80 mole % mixture of CCl_4 vapor and Cl_2 was passed into the crucible containing the salt for 2.5 hr at 500 to 650°C, an atmosphere of argon being maintained on the bed before and after the chlorination. Equipment has been installed for carrying out this process continuously on a 20-lb/day scale.

Chlorination of Thorium Dioxide–Carbon Mixtures. In earlier studies thorium tetrachloride was prepared in the same apparatus by treating thorium dioxide containing 10 wt % lampblack with free chlorine at 675°C for 2 hr. The thorium tetrachloride was sublimed by purging the carbon-contaminated bed with argon containing 10% Cl_2 at 800°C. The product was very pure and of satisfactory consistency for the reduction step.

Solid $Th(NO_3)_4 \cdot 4.8H_2O$ was denitrated in a 50-50 mole % mixture of KCl and NaCl at 670°C, and the resulting ThO_2 suspension was chlorinated by sparging with phosgene at 675 to 700°C to produce a 9 mole % solution of thorium chloride in the melt. The thorium tetrachloride was quantitatively recovered from the melt, after cooling and grinding, by leaching with propylene diamine.

A mixture of thorium nitrate and carbon (mole ratio of 1/6) was partially denitrated by heating it to 200°C and was simultaneously chlorinated by passing in chlorine gas. The reaction was highly exothermic and in 10 min yielded a product with a Cl-Th mole ratio of 3.3. This reaction is being studied for possible application in two stages of continuous equipment.

Conversion of ThC_x to $ThCl_4$ ranged from 30 to 80% when free chlorine was passed over a horizontal bed of powdered solids for 0.5 hr at 400 to 450°C; the higher percentages corresponded to shallow, porous beds and to the high percentage of reacted thorium in the initial carbide. The reaction is exothermic. and the initial rate appears to be very rapid. The thorium carbide preparations used were prepared by induction heating of thorium dioxide–carbon mixtures in a graphite reactor under a hydrogen atmosphere to temperatures of 1800 to 2100°C.

Reduction of Thorium Tetrachloride. Tentative specifications for $ThCl_4$ to be used in the Metallex process are: Cl-Th atom ratio, >3.8; $<0.5\%$ H_2O; and $<5\%$ insoluble in anhydrous methanol.

In laboratory-scale experiments, solid powdered thorium tetrachloride was reduced, under a helium blanket, with 3 to 4 *M* sodium amalgam. The product was die-pressed and sintered to massive thorium metal comparable to that produced by reduction in propylene diamine solution. Temperatures were varied from 25 to 270°C, contact times

from 20 min to 4 hr, and sodium excesses from 7 to 145%. Yields varied from 0 to 90% and showed no correlation with the sodium excess used. Higher yields were obtained with shorter contact times and temperatures in the range 200 to 260°C, but the optimum combination of variables has not yet been determined.

Various types of mixing equipment were used. Optimum mixing seemed to be provided in a high shear system. Thorium mercuride particle size in the product amalgam tended to increase with temperature and with the length of time at high temperatures. The larger particles tended to be washed out in the amalgam wash step, which caused the yields to be lower.

In further studies on reduction in anhydrous propylene diamine solution, a 30-min contact of such solutions 0.35 to 0.5 *M* in $ThCl_4$ with 1.0 to 4.0 *M* sodium amalgam in a helium-blanketed mixer-settler resulted in metal yields of 4.4 to 89% of the thorium charged in a single batch equilibration. The use of partially hydrated salt, which raised the water content of the PDA to more than 0.15%, reduced the yields. There was no apparent correlation between the sodium excesses used, 0.07 to 80%, and the yields, but higher yields were obtained when the amalgam temperature was 120 to 130°C while the organic phase temperature was concurrently maintained at less than 110°C. The initial concentration of the $ThCl_4$ in the PDA and of sodium in the amalgam had no effect on equilibrium yields.

Separation of Thorium Metal from Amalgam. From a 1% thorium quasi amalgam produced by sodium amalgam reduction of thorium tetrachloride in propylene diamine, a 15% thorium amalgam cake was produced by a combined filtration-pressing operation in a Carver pressure filter.

Reduction of Uranium Salt with Sodium Amalgam. In preliminary experiments UF_6 was reduced to uranium metal by bubbling the gas into sodium amalgam. The postulated reaction is:

$$UF_6 + 6Na(Hg) \longrightarrow 6NaF + U(Hg) \ ,$$

$$\Delta F^0_{U^{235}} = -167 \text{ kcal/mole} \ .$$

Reduction was complete, but only 6% of the uranium was recovered as usable quasi amalgam containing 2 to 3% uranium metal. Experiments designed to increase the yield of usable product are in progress. Recovery of the uranium metal by pressing and volatilization of the mercury is proposed.

10. FLUOROX PROCESS

The Fluorox process was developed for economical preparation of uranium hexafluoride from concentrated uranium solutions and solids. Solid feed, in pellet form, and vertical moving-bed reactors are utilized for rapid and efficient reaction and relatively simple, inexpensive operation. The steps in the process (see Fig. 10.1) are feed preparation, which includes converting the uranium starting material to a form that can be pelleted; simultaneous reduction and hydrofluorination, with NH_3 and HF, to UF_4; and oxidation of the UF_4 by air or oxygen to UF_6 and UO_2F_2, the latter being recycled to the pelleting step. The UF_6 can be used as feed for a diffusion plant, or it can be reduced to metal, for example, by a process similar to the Metallex process (see Sec. 9).

An automatically controlled pelleting process has been developed which, in small commercial-scale equipment (1000 lb of pellets per hour), prepared pellets containing 19 mole % uranyl nitrate from molten uranyl nitrate and solid uranium trioxide. Denitration of these pellets to 99.5% uranium trioxide pellets at a rate of 25 lb/hr was satisfactorily demonstrated in a moving-bed reactor 4 in. in diameter and 6 ft high. A pilot plant for demonstration of this step is being designed. The reduction-hydrofluorination step has been carried out in a 4-in.-dia by 5-ft-high moving-bed reactor,[2] and the oxidation step has been carried out in a 1-in.-dia by 11-in.-high moving-bed reactor.

Feed Preparation. Since uranyl nitrate is the product of the solvent extraction processes for recovering uranium from spent fuel elements, considerable attention has been given to putting it into a form suitable for feed to the Fluorox process. In previous studies[3] it was shown that uranyl nitrate mixed with uranium trioxide could be satisfactorily pelleted and denitrated. More

[2]The individual reduction and hydrofluorination steps are being investigated on a pilot-plant scale by National Lead. H. F. Muhlhauser, D. J. Loudin, G. G. Briggs, and E. W. Mantz, *The Evaluation of the Moving Bed Reactor for the Production of Uranium Tetrafluoride, Interim Report*, FMPC-524 (Jan. 1, 1955).

[3]*Chem. Tech. Semiann. Prog. Rep. Sept. 30, 1954*, ORNL-1800, p 7.

[redacted]
ORNL-LR-DWG 6516

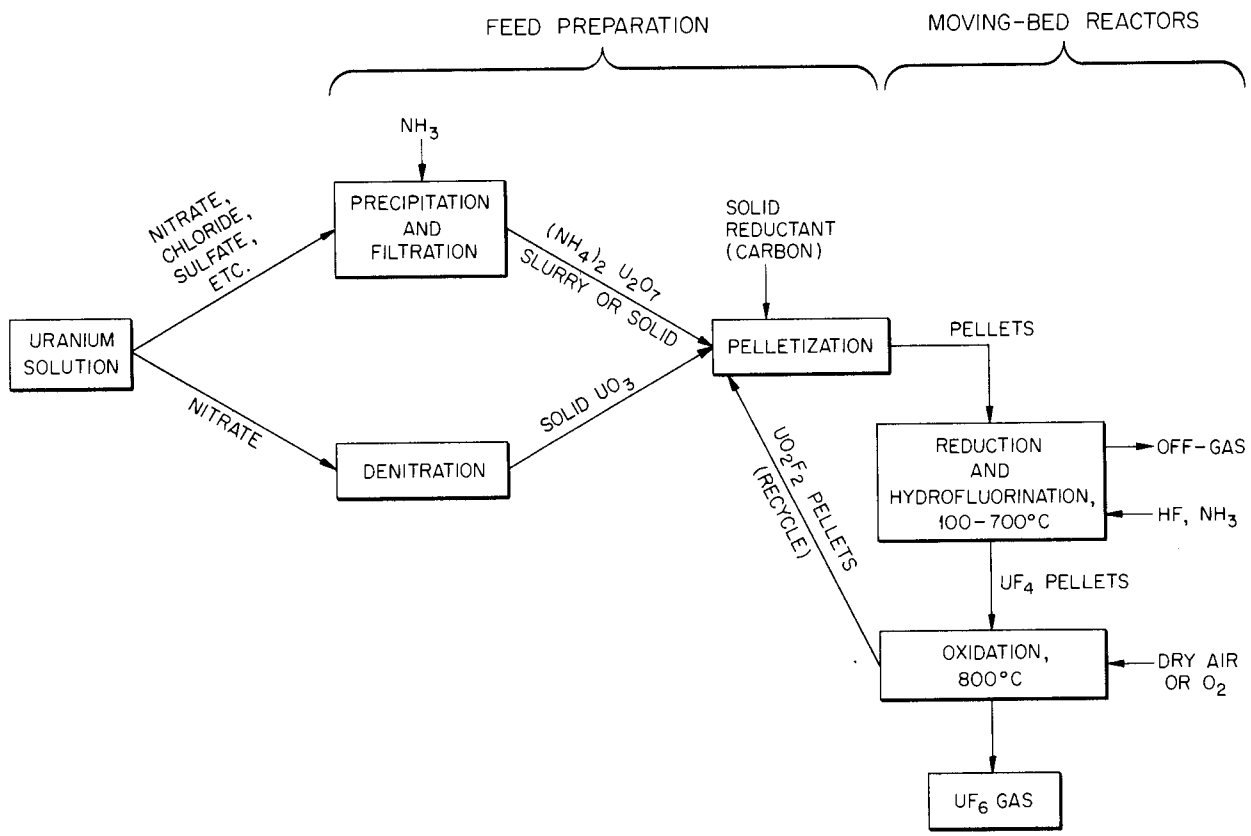

Fig. 10.1. Preliminary Schematic Flowsheet for Fluorox Process for Preparing Uranium Hexafluoride from Uranium Solution or Solid.

recently, pellets of $UO_2(NO_3)_2$-UO_3-H_2O were continuously prepared from molten uranyl nitrate hydrate and solid uranium trioxide, over a 40-min period at a rate of 1000 lb/hr in a hammer mill equipped with a perforated bottom plate. The consistency of the pellets was controlled by manual adjustment of the rate at which the UO_3 and molten uranyl nitrate were metered to the mill. The pellets produced contained 7 wt % nitrate (19 mole % uranyl nitrate).

These pellets were denitrated in a 4-in.-dia moving-bed reactor that used wall-to-bed heating. Data obtained in the runs indicated that gas-to-bed heat transfer would be more economical, as had been indicated by preliminary calculations. Pellets containing up to 10 wt % nitrate (28 mole % uranyl nitrate) can be successfully denitrated in a moving-bed reactor.[3]

Material finer than 8 mesh produced in the pelleting and subsequent milling was successfully recycled in the pelleting operation at a rate high enough (40% of the total feed rate) to utilize all fines.

Pellets of UO_3-H_2O, for use in further studies of the reduction-hydrofluorination step, were continuously prepared from solid UO_3 and water in the same equipment at the same rate. Their consistency was automatically controlled by a millivolt recorder-controller which regulated the water flow into the mill. Laboratory tests indicated that UO_2F_2 produced in the oxidation of UF_4 can be pelletized with equal amounts of UO_3 or ammonium diuranate, corresponding to recycle conditions in the processing of the solvent extraction process product or crude ore concentrates, respectively.

Reduction-Hydrofluorination. A study of the following reactions in the 4-in.-dia moving-bed reactor was continued:

$$UO_3 \cdot xH_2O + 2HF \longrightarrow UO_2F_2 + yH_2O$$

and

$$3UO_2F_2 + 6HF + 2NH_3 \longrightarrow 3UF_4 + 6H_2O + N_2$$

Preheating of the pellets and buffer gas entering the top of the reactor was found to be unnecessary, since HF in the off-gases reacted rapidly with the incoming hydrated UO_3 pellets to form the intermediate, UO_2F_2, within a few inches of the gas outlet.

Individually controlled heaters surrounding each of the five 1-ft-high reaction zones were used to maintain adiabatic conditions in order to determine the practicability of using the heat required for dissociation of the HF and NH_3 to compensate for the heats of reaction. When the reactant gases were distributed through annuli in the reactor shell, there was little cooling effect apparent on the interior of the bed; however, when the gases were injected through small nozzles directly into the center of the bed, the cooling effect from small amounts of HF and NH_3 was pronounced. Several attempts were made to remove part of the heat of reaction by injecting steam directly into the bed; however, no increase in conversion efficiency was apparent, and difficulties were encountered from entrained condensate caking the bed.

Oxidation. The chemical feasibility of converting UF_4 to UF_6 by reaction with oxygen

$$2UF_4 + O_2 \longrightarrow UO_2F_2 + UF_6$$

instead of elemental fluorine was demonstrated on a gram scale in a 1-in.-dia reactor. The production of UF_6 without elemental fluorine has been considered previously,[4,5] but the high temperatures (800°C) required, the slow reaction rate achieved with fused UF_4, and the possibility of corrosion discouraged large-scale application. Current studies, however, have shown a rapid reaction rate of oxygen with porous pellets of UF_4, and no severe corrosion was noted in the Inconel reactors used in initial tests.

The oxidation of UF_4 pellets is slightly exothermic at 800°C.[5] However, the radiation heat losses from the small reactor were so high that the initiation of the oxidation reaction could not be observed thermally. Off-gas analyses showed that, at 700°C, 1 mole of UF_4 reacted for each 50 moles of oxygen admitted to the reactor. The yield was 19 times greater at 800°C. Several catalysts – ozone, hydrogen fluoride, nickel, and vanadium – did not increase the reaction rate.

Uranium tetrafluoride pellets, produced in the 4-in.-dia moving-bed reactor, and dry air were passed concurrently down a 1-in.-dia reactor. When the temperature reached 800°C, the dense green UF_4 pellets reacted to form porous yellow UO_2F_2 pellets and UF_6 gas. The UF_6 gas was condensed in a cold trap, and the UO_2F_2 pellets were removed from the bottom of the reactor. The main experimental difficulty was caused by the reaction of UF_6 with a few UF_4 pellets which passed through the reaction zone before operating temperatures were attained. Intermediates, U_2F_9 and U_4F_{17}, were formed which caused bridging and column plugging. This startup trouble can be avoided by filling the column with uranyl fluoride pellets initially and by adding UF_4 pellets after the bed has reached 800°C.

In order to prevent excessive accumulation of impurities in the UO_2F_2 recycle stream, a small fraction of the stream will have to be processed separately. The amount of this stream will depend on the amount of nonvolatile impurities in the feed and the extent to which this material can be permitted to accumulate in the system, but should not exceed 1% with the purified feed solutions normally used. Methods available for processing this stream include ion exchange, solution and precipitation, and direct fluorination with waste fluorine.

11. ION-EXCHANGE TECHNOLOGY

The present purpose of the ion-exchange studies is to develop a continuous ion-exchange process for recovering uranium from crude concentrates. Sulfuric acid leach pulps of Utex ore were successfully processed, without filtering, in both a 2- and a 6-in.-dia Higgins continuous contactor, and a 12-in.-dia contactor, which will have a

[4] S. Fried and N. R. Davidson, *The Preparation of TF_6 from TF_4 and O_2*, N-1722 (MUC-GTS-1118) (Nov. 14, 1944).

[5] For example, see S. S. Kirslis, T. S. McMillan, and H. A. Bernhardt, *The Reaction of Uranium Tetrafluoride with Dry Oxygen*, K-567 (March 15, 1950).

capacity of 6 to 12 tons of uranium ore per day with Utex leach pulp feed, is being constructed for evaluation tests. In the 2-in.-dia contactor, conversion of uranium to the chloride form and elution with water were demonstrated to be feasible as an alternate to elution with ammonium nitrate. Carbonate leach pulp from Mallinckrodt uranium reduction bomb liners was processed in the 2-in.-dia contactor.

Pulps containing up to 11 wt % solids were processed with Permutit SK resin, 10 to 20 mesh; ammonium nitrate was the eluant. In the 2-in.-dia column, ore pulps containing more than 0.3% solids larger than 200 mesh could not be handled, but solids smaller than 300 mesh caused no trouble. Pulps containing up to 0.5% solids in the 200 to 300 mesh range were processed successfully, but no upper limit was set for this range in size. Processing rates were 300 to 400 gph/ft^2 with uranium losses of 0.2 to 1% and 0.1 to 0.2% for the ore and slag pulps, respectively. The eluant used with the sulfate ore pulp was 0.1 *M* ammonium nitrate, and that used with the carbonate slag pulp was 1.0 *M* sodium bicarbonate. The average product uranium concentration was 10 g/liter for the ore pulp and 28 g/liter for the Mallinckrodt slag leach. Precipitation of ammonium diuranate from the Utex eluate solution yielded a product that contained 63.6% uranium, 0.2% iron, and less than 0.1% vanadium.

The 6-in.-dia contactor operated without mechanical difficulties with ore leach pulps containing 11 wt% solids when 1 wt % of the particles was larger than 325 mesh; larger particles tended to plug the column. Indications were that a processing rate of 2.5 tons of uranium ore per day could be maintained.

Conversion of the uranium from the sulfate to the chloride form, on the resin, with concentrated sodium chloride solution and elution with water gave a product that was higher in uranium concentration than that given by ammonium nitrate elution of the sulfate form. Sodium chloride is initially cheaper than ammonium nitrate, and, in addition, the brine can be recycled. Precipitation of ammonium diuranate from this solution gave a product containing 0.3% chloride, but calcination at 800°C reduced this to less than 0.0005%.

[6]Development work undertaken at the request of Mound Laboratory. For details see T. A. Arehart *et al.*, *Monex Process Development: Terminal Report*, ORNL-1873 (in preparation).

12. MONEX PROCESS

The Monex solvent extraction process was developed[6] for recovering thorium and uranium from digested, unclarified Brazilian monazite sludge. The sludge, which is the residue from a rare-earth recovery process, contains 39% thorium on a dry weight basis. The Monex process (see Fig. 12.1) is based on the Thorex process (see Sec. 1) for recovering thorium and uranium from irradiated thorium metal. It consists in digesting the sludge for 3 hr in 70% nitric acid at 90°C, extracting the thorium and uranium with 42% tributyl phosphate, scrubbing with dilute aluminum nitrate, and partitioning and further processing of the thorium-uranium product by standard procedures. In demonstrations of the feed digestion and extraction-scrub steps, thorium losses were 0.5 to 2%; uranium losses were less than 0.01%. Rare-earth decontamination factors and uranium separation factors for the first-cycle thorium product were high enough that only an oxalate precipitation of the thorium may be sufficient for final purification.

13. EXCER PROCESS

The Excer process[7] for converting uranyl nitrate to uranium tetrafluoride by elution from a cation-exchange resin and electrolytic reduction of the product to uranium tetrafluoride operated satisfactorily and cheaply, but development work was interrupted when the moving-bed process[8] (see "Fluorox Process," Sec. 10) was found to be somewhat cheaper.

The inability of the Excer process to compete economically with the moving-bed process resulted from the instability of anode materials in the corrosive system. Carbon electrodes required daily replacement, leading to high labor costs, and the corrosion rate of platinum was too high for it to be used economically.

In further studies on the process a cation-exchange membrane was used to separate the electrode compartments. Preliminary tests indicated that anode corrosion is negligible under these conditions. When sulfuric acid was used as the

[7]*Chem. Tech. Semiann. Prog. Reps. March 31, 1954* (ORNL-1708), p 6; *Sept. 30, 1953* (ORNL-1561), p 4.

[8]*Chem. Tech. Semiann. Prog. Rep. Sept. 30, 1954*, ORNL-1800, p 7.

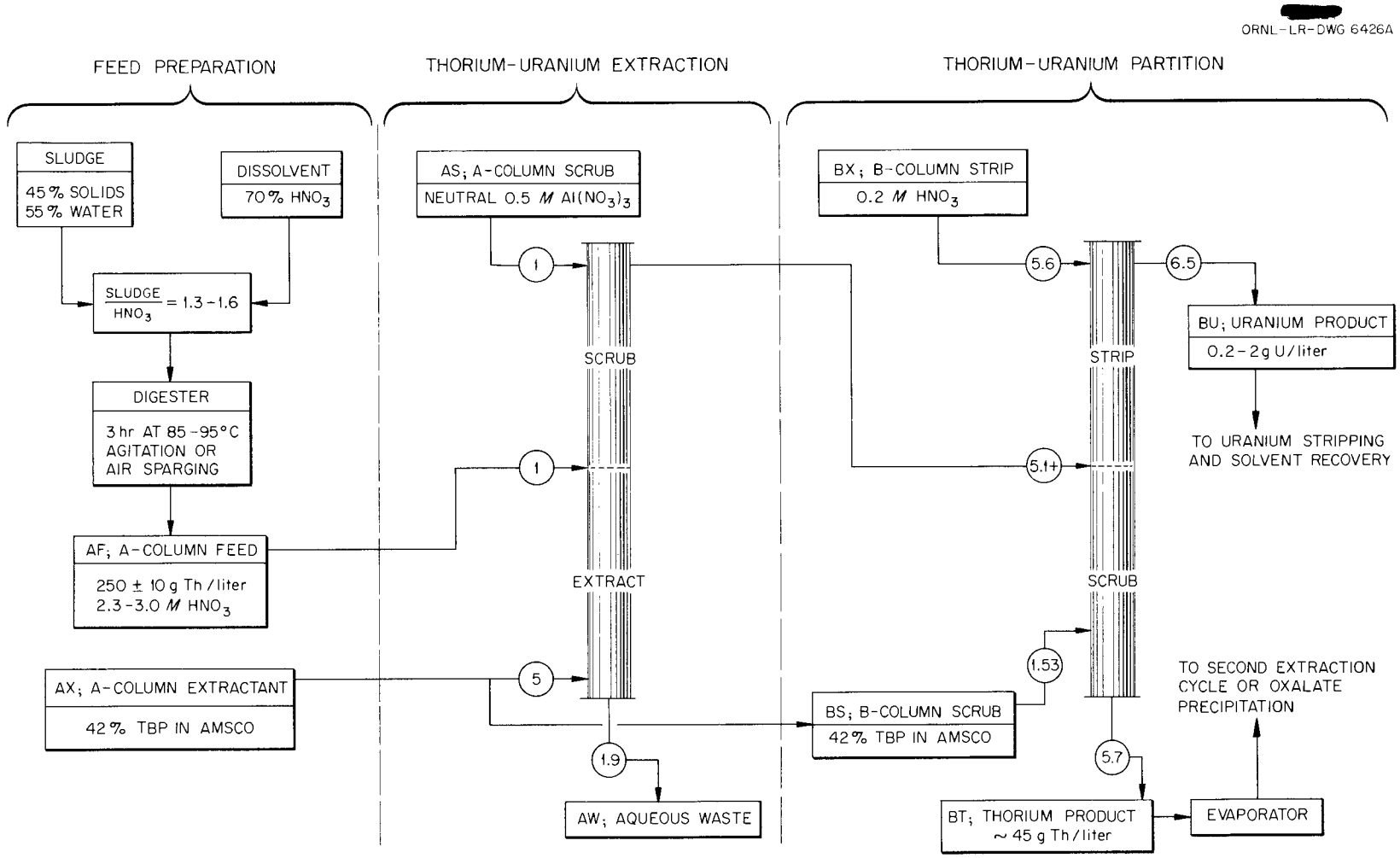

Fig. 12.1. Monex Process Flowsheet, March 3, 1955. Circled numbers represent stream ratios based on AF = 1.

anolyte, a lead anode, which was separated from the uranyl fluoride–hydrofluoric acid catholyte by a cation-exchange membrane, was corroded at a very slow rate. The separation of the electrodes by the membrane and the consequent isolation of the gases evolved at the anode may permit the direct utilization of uranyl nitrate in the reduction step.

PART III. GENERAL CHEMISTRY AND ENGINEERING STUDIES

14. ECONOMIC STUDIES

The capital cost of the Idaho Chemical Processing Plant was reported earlier.[1] The final report[2] on the economic study of this plant is nearly ready for publication. It is a detailed discussion of such factors as shielding, criticality considerations, location of the plant, and SF accountability requirements, which had a deciding effect on the capital outlay and the operational cost incurred during the first processing of NP fuel from Hanford (see tabulation below). Depreciation and inventory charges are not included in the table presented here but are discussed elsewhere.[2]

Direct Operating Cost (per dollar of expense)	(cents)
Direct labor	12.1
Direct supervision	4.8
Employee benefits	1.5
Process chemicals	7.7
Store supplies	2.1
Utilities	20.1
Maintenance and repair (major)	1.9
Maintenance and repair (minor)	14.9
Product control laboratory	28.6
Process improvement laboratory	5.9
Engineering department	0.5
Total	$1.00

Indirect General Plant Expense	(cents)
Production overhead	8.7
Administration	21.1
Medical	1.0
Health Physics	9.8
SF accountability	3.4
Other	11.1
Total	55.0

The tabulation shows that for every dollar of direct expense, there is an overhead charge of 55 cents.

[1] *Chem. Tech. Semiann. Prog. Rep. Sept. 30, 1954*, ORNL-1800, p 11; for details see P. L. Robertson and W. G. Stockdale, *A Cost Analysis of the Idaho Chemical Processing Plant*, ORNL-1792 (Jan. 4, 1955).

[2] W. G. Stockdale and P. L. Robertson, *An Engineering Appraisal of the Idaho Chemical Processing Plant*, ORNL-1791 (to be published).

In addition to the final report on the Idaho Plant, two lectures on radiochemical plant economic studies, together with slides, are being prepared; one will cover construction costs, and review by the Atomic Energy Commission will be requested for declassification; the other will discuss classified cost information.

15. HIGH-ACTIVITY-LEVEL CHEMICAL DEVELOPMENT FACILITY

A safe and permanent facility for continuance of development work on extremely radioactive materials is being designed. The facility will contain two 6 × 6 × 11 ft cells and two 6 × 10 × 11 ft cells. The outside dimensions of the cell bank will be about 15 × 50 × 15 ft. Concrete shielding 5.5 in. or barytes concrete 4 ft thick will be used, and each cell will be equipped with Argonne model 8 manipulators, cerium glass windows, access doors, transfer drawers, and normal utilities and services. The design is scheduled for completion by July 30, 1955.

16. FISSION-PRODUCT ACTIVITY-LEVEL CALCULATIONS

Nuclear data on U^{235} fission products, which will be required for Oracle calculation of fission-product activity levels in irradiated reactor fuels, have been compiled.[3] The results of the calculations will be used in shielding and chemical processing plant design.

17. CHEMICAL ENGINEERING RESEARCH STUDIES

Magnetic Filter. A magnetic filter, which could be remotely controlled and therefore would be particularly advantageous for radioactive operations, is being constructed for evaluation tests. The experimental unit consists of a 3-in.-dia Pyrex column encompassed at one point by an electromagnet. The filter bed will be a magnetic powder suspended in the column at this point and held there while the current is on. The filter bed and cake would be completely discharged, when necessary, by the current being turned off. Since most finely divided powders of magnetic materials

[3] J. O. Blomeke, *Nuclear Properties of U^{235} Fission Products*, ORNL-1883 (in preparation).

react readily with solutions commonly used in radiochemical processing, several magnetic powders were tested with 6 *N* sulfuric acid and 6 *N* nitric acid. Type E carbonyl iron and Plast-Coriron, both more than 99% iron, reacted violently with both acids. In 31 days, ferrosilicon (85% iron, 15% silicon) lost 0.3% of its weight when exposed to 6 *N* nitric acid and lost 2.7% when exposed to 6 *N* sulfuric acid. Permalloy (81% nickel, 17% iron, 2% molybdenum), which has the best magnetic properties of any substance tested, showed about a 36% loss during the same period in 6 *N* sulfuric acid but reacted violently with 6 *N* nitric acid. It might be used with dilute sulfuric acid if exposure time is not too great and corrosion products are not objectionable.