CENTRAL RESEARCH LIBRARY
DOCUMENT COLLECTION

UNCLASSIFIED

MARTIN MARIETTA ENERGY SYSTEMS LIBRARIES
3 4456 0360756 8

ORNL-1899
Chemistry
cy 4

THE DETERMINATION OF WATER BY COULOMETRIC TITRATION

A. S. Meyer, Jr.
C. M. Boyd

CENTRAL RESEARCH LIBRARY
DOCUMENT COLLECTION

LIBRARY LOAN COPY

DO NOT TRANSFER TO ANOTHER PERSON

If you wish someone else to see this document, send in name with document and the library will arrange a loan.

OAK RIDGE NATIONAL LABORATORY
OPERATED BY
CARBIDE AND CARBON CHEMICALS COMPANY
A DIVISION OF UNION CARBIDE AND CARBON CORPORATION
UCC
POST OFFICE BOX P
OAK RIDGE, TENNESSEE

UNCLASSIFIED

ORNL 1899

Copy No. 4

Contract No. W-7405-eng-26

THE DETERMINATION OF WATER BY COULOMETRIC TITRATION

A. S. Meyer, Jr. and C. M. Boyd

May 20, 1955

ANALYTICAL CHEMISTRY DIVISION

M. T. Kelley, Director
C. D. Susano, Associate Director

DATE ISSUED

JUN 9 1955

OAK RIDGE NATIONAL LABORATORY
Operated by
CARBIDE AND CARBON CHEMICALS COMPANY
A Division of Union Carbide and Carbon Corporation
Post Office Box P
Oak Ridge, Tennessee

3 4456 0360756 8

INTERNAL DISTRIBUTION

1. C. E. Center
2. Biology Library
3. Health Physics Library
4-5. Central Research Library
6. Reactor Experimental Engineering Library
7-11. Laboratory Records Department
12. Laboratory Records, ORNL R.C.
13. C. E. Larson
14. L. B. Emlet (K-25)
15. J. P. Murray (Y-12)
16. A. M. Weinberg
17. E. H. Taylor
18. E. D. Shipley
19. F. C. VonderLage
20. M. T. Kelley
21. C. P. Keim
22. J. H. Frye, Jr.
23. W. H. Jordan
24. J. A. Swartout
25. F. L. Culler
26. S. C. Lind
27. A. H. Snell
28. A. Hollaender
29. G. H. Clewett
30. K. Z. Morgan
31. T. A. Lincoln
32. A. S. Householder
33. R. S. Livingston
34. D. S. Billington
35. C. E. Winters
36. D. W. Cardwell
37. E. M. King
38. D. D. Cowen
39. J. A. Lane
40. M. J. Skinner
41. G. E. Boyd
42. R. A. Charpie
43. C. J. Borkowski
44. E. P. Blizard
45. A. F. Rupp
46. S. A. Reynolds
47. P. F. Thomason
48. D. J. Fisher
49. J. H. Edgerton
50. U. Koskela
51. L. T. Corbin
52. H. P. Raaen
53-56. E. J. Murphy
57. B. S. Weaver
58. S. F. Carson
59. J. C. White
60. O. Menis
61. H. P. House
62. L. J. Brady
63. W. F. Vaughan
64. C. K. Talbott
65. J. R. Lund
66. A. F. Roemer
67. E. C. Lynn
68. C. J. Collins
69. W. R. Grimes
70. K. B. Brown
71. H. M. McLeod
72. J. S. Drury
73. C. D. Susano
74. A. S. Meyer, Jr.
75. C. M. Boyd
76. R. W. Dodson (consultant)
77. H. Eyring (consultant)
78. J. W. Kennedy (consultant)
79. G. T. Seaborg (consultant)
80. R. H. Muller (consultant)
81. N. H. Furman (consultant)
82. ORNL Document Reference Library, Y-12 Branch
83. P. M. Reyling

EXTERNAL DISTRIBUTION

84. R. F. Bacher, California Institute of Technology
85. Division of Research and Medicine, AEC, ORO
86-381. Given distribution as shown in TID-4500 under Chemistry category

DISTRIBUTION PAGE TO BE REMOVED IF REPORT IS GIVEN PUBLIC DISTRIBUTION

THE DETERMINATION OF WATER BY COULOMETRIC TITRATION

ABSTRACT

A coulometric method has been developed for the determination of traces of water in organic solvents. The water is titrated by Karl Fischer reagent which is produced by the electrolytic generation of iodine in a solution of the depleted reagent in ethylene glycol. The stoichiometry of the reaction corresponds to one mole of iodine per mole of water, or 10.7 coulombs of electrical current per mg of water. The effect of side reactions which consume iodine is eliminated by the use of a supplementary generating current which is adjusted to maintain the solution at the end point before the addition of the sample.

The method has been applied to the determination of water in propanediamine, 1-2 by neutralizing the strong amine with a solution of salicylic acid in ethylene glycol, rather than acetic acid in methanol, to reduce the rate of esterification. Concentrations of water as low as 50 μg/ml have been determined in one-ml samples of propanediamine, 1-2, while concentrations of 5 μg/ml have been measured in other solvents. The absolute standard deviation of the titration is approximately 2 μg of water. For samples which contain concentrations of water in excess of 0.1 per cent the coefficient of variation is less than 2 per cent.

THE DETERMINATION OF WATER BY COULOMETRIC TITRATION

A. S. Meyer, Jr. and C. M. Boyd

INTRODUCTION

A great number of methods have been developed for the determination of water. The separation of the water from a sample by oven drying, distillation, or absorption are the bases of most methods. In many cases the determination may be based on a chemical reaction or a measurement of a physical property. The method developed by Karl Fischer[2] has proved to be the most widely applicable method available for the determination of water. The reagent, a solution of iodine, sulfur dioxide, and pyridine in methanol, is known by the generally accepted name, "Karl Fischer Reagent." It has been demonstrated[2] by a thorough study of the stoichiometry of the Fischer method that the main reaction in methanol solution appears to take place in two distinct steps which are as follows:

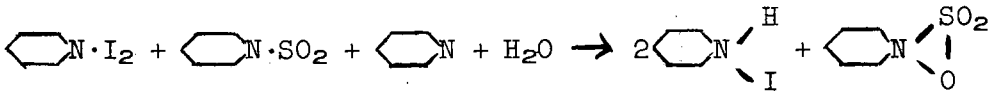

(1)

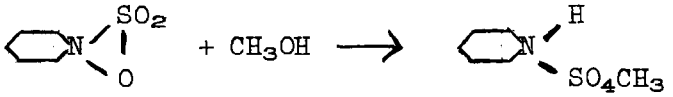

(2)

Only the first reaction (1) involves the absorption of water in which one mole of water is removed by each mole of iodine introduced.

With this reagent, the accurate determination of water is possible in nearly all classes of organic compounds. Some classes of organic compounds interfere by reacting with one or more of the components of the reagent to form water. In these cases, precautions must be taken to eliminate the effects of these reactions.

Of particular interest in this study was the use of this method for the determination of water in strong amines. The strongly basic propanediamine, 1-2 was used in this work. The titration of water in amines with Fischer reagent is possible, but with amines stronger than benzylamine ($K = 2.4 \times 10^{-5}$) results which are slightly high were obtained. It is usually recommended that the more basic amines be neutralized by treating them with an excess of glacial acetic acid which is dissolved in methanol, before titrating with Karl Fischer reagent[10]. Acetic acid reacts slowly with the methanol present to form water and the corresponding ester. This amounts to a significant error when only traces of water are present in the sample. In a study on methods of eliminating this error due to esterification, Lee[4] found that neutralization of the amine with salicylic acid in which ethylene glycol was used as a diluent gave much less interference.

The precision and accuracy that can be attained by the use of the Karl Fischer method, using a visual end point on a macro scale, is of the order of 0.5 mg of water. The use of a microtechnique for this titration can increase the sensitivity to less than 0.1 mg of water[5]. In describing an improved procedure for Karl Fischer microtitrations, Wiberley[12] reported a limiting sensitivity of 0.01 mg of water which corresponded to 0.01 ml of reagent.

The feasibility of indirect coulometric analysis was first demonstrated by Szebelledy and Somogyi[11]. Their procedure depends on the electrolytic generation of bromine with 100 per cent current efficiency, and the subsequent reaction of the bromine with the substance being determined. This process consists essentially in the titration of a sample with an electrolytically generated reagent, and has been given the name of coulometric titration[6]. It has been demonstrated that iodine may also be generated with 100 per cent current efficiency[8]; therefore, the coulometric titration of water by the electrolytic generation of iodine from depleted Karl

Fischer reagent appeared to be feasible. This coulometric method would offer significant advantages over the standard solution method in that the problem of preparing, standardizing, storing and measuring the standard reagent is eliminated, and minute quantities of the reagent may be generated with high precision.

In the study of the stoichiometry of the Fischer method[10] it was also established that the 1:1 stoichiometry of water to iodine was valid provided the ratio of the constituents of the reagent exceeded the minimum ratio of $I_2:SO_2:3C_5H_5N:CH_3OH$. The recommended reagent[10] is made to contain at least a threefold excess of a mixture of SO_2, C_5H_5N and CH_3OH to iodine. Since sulfur dioxide and pyridine are consumed in the reaction of Fischer reagent with the water in the diluent, the amount of these constituents is increased to a fourfold excess to assure sufficient amounts for the proper reactions during the generation step. In the generation of iodine from iodide the anode reaction is:

$$2I^- \longrightarrow I_2 + 2e. \qquad (3)$$

Assuming 100 per cent current efficiency and a one to one stoichiometry of iodine to water, each molecule of water consumes two electrons in the overall reaction. It follows that 2 x 96,500 coulombs will be required for each mole, or 10.71 coulombs for each mg of water titrated.

EXPERIMENTAL

The coulometric, titration method which was used in this work was of the internal generation type. In this technique, both the sample and the generator electrolyte are contained in the electrolysis vessel. The use of externally generated titrant does not appear to be practical for this titration because of the difficulties which are encountered in maintaining an electrolytic solution at a negligible moisture content. The titration cell consisted of a two-compartment cell containing a platinum gauze anode immersed in the solution into which the sample was added. A platinum gauze cathode was isolated in a separate compartment which was filled with the same solution that was in the anode compartment. Electrical connection was made through a sintered-glass disk. A drawing of the cell is shown in Figure I. The demountable design was selected so that the position of the generating electrodes could be adjusted to minimize the cell resistance without impairing the circulation of electrolyte. A total volume of approximately 70 ml of solution was used.

The determination of the end point with Fischer reagent has been made by applying the electrometric "dead-stop" technique[3]. In a modification of this method[1] two platinum electrodes are maintained at a potential of approximately 10 mv. As long as water is present, the iodine which is generated reacts to form hydriodic acid. The applied potential of a few millivolts polarizes one electrode and no current flows. At the end point, free iodine depolarizes the electrode and the resulting flow of current is then measured with a microammeter.

The source of constant current which was used for the generation of iodine was a 110-volt a-c power supply rectified to produce d-c energy with a capacity up to 50 amperes and 50 volts. It was found that a more constant

FIGURE I

UNCLASSIFIED
ORNL-LR-DWG. 7050

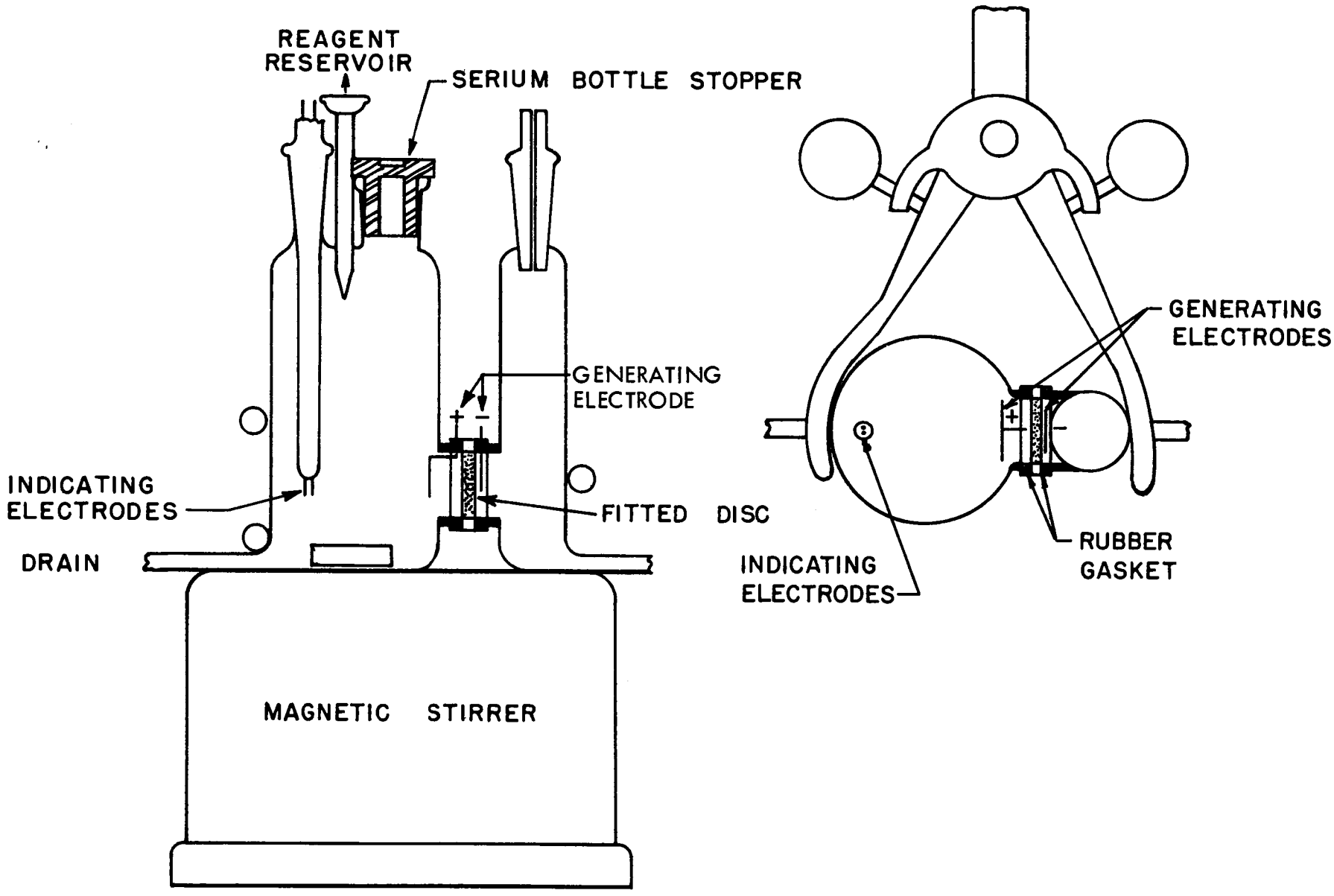

TITRATION VESSEL FOR THE COULOMETRIC DETERMINATION OF WATER

current could be maintained if the supply was maintained at a high voltage and if a 250-ohm dropping resistor was used in series with the cell. The value of the average current during a titration was determined by making several potentiometric measurements of the voltage drop across a standard 5-ohm resistor in series with the cell.

To check the stoichiometry of the reaction of iodine with water, aliquots of a standard solution of water in methanol were titrated. The solution was standardized by titrating with standard Karl Fischer reagent which in turn had been recently standardized against sodium tartrate dihydrate[7].

The coulometric titrations were carried out in the generation cell which contained a solution of depleted Karl Fischer reagent in anhydrous methanol. The water in the methanol was reacted by the addition of approximately five ml of Fischer reagent. The solutions were adjusted to the end point by the addition of more methanol or by the generation of iodine with electric current. Prior to the titrations, the solution was mixed by transference from one compartment of the cell to the other by forcing through the sintered-glass disk. This was done in order to assure a moisture-free solution in each compartment at the start of the titration. At this point, the anode compartment was closed to the atmosphere by a serum-type, rubber diaphragm containing a 22-gage hypodermic needle which acted as a pressure equalizer during the addition of the sample. The solution in the anode compartment was stirred magnetically with a Teflon-covered bar.

When the solution was near the end point, the microammeter reading was approximately 50 microamperes. Immediately before the addition of the sample the reading of the microammeter was noted and established as the end point value. Then, aliquots of a standard water-methanol solution were added to the anode compartment of the cell by means of 1-ml tuberculin syringes which

had been dried at 120° C. The time of the generation period was measured by an electric timer which was coupled to the generating current switch.

In the titration of 1-ml aliquots of a standard water-methanol solution (1.62 mg per ml), it was found that as the time required for titration was increased, by decreasing the current from about 0.2 to 0.05 ampere, the number of coulombs required for titration increased, as shown in Table I.

Table I

Effect of Titration Rate on the Coulometric Determination of Water with Karl Fischer Reagent

One ml of Standard Water-Methanol Solution (1.62 mg H_2O/ml)

Current, amp	Time, sec	Coulombs	Coulombs/mg H_2O Theory	Coulombs/mg H_2O Found
0.203	87	17.7	10.71	10.9
0.110	163	17.9	10.71	11.0
0.0576	314	18.1	10.71	11.2

A possible explanation of this trend towards higher values as the titration progressed is that the solution produced in the cathode compartment was of a reducing nature and diffusion of this solution into the anode compartment caused an increase in the quantity of electrical current required to titrate a given amount of water. If the solution in the cathode compartment at the start of the titration contained an excess of iodine, diffusion of this solution into the anode compartment should cause a decrease in the number of coulombs required. This was found to be the case, as shown in Table II.

Table II

Effect of Diffusion Between Compartments on the Coulometric Determination of Water with Karl Fischer Reagent

One ml of Standard Water-Methanol Solution (1.62 mg H_2O/ml)

Iodine in Cathode Compartment	Current, amp	Time, sec	Coulombs	Coulombs/mg H_2O Theory	Coulombs/mg H_2O Found
No excess	0.110	163	17.9	10.71	11.0
Excess	0.121	132	16.7	10.71	10.3

The effect of the presence of glacial acetic acid is shown in Table III. In this experiment, it is shown that the formation of water by esterification caused an increase in the number of coulombs required per mg of water. As the time of titration was made longer, this deviation became progressively greater.

Table III

Effect of Titration Rate and Glacial Acetic Acid on the Coulometric Determination of Water with Karl Fischer Reagent

One ml of Standard Water-Methanol Solution (1.62 mg H_2O/ml)

Current, amp	Time, sec	Coulombs	Coulombs/mg H_2O Theory	Coulombs/mg H_2O Found
0.208	86	17.9	10.71	11.1
0.114	168	19.2	10.71	11.9
0.065	322	21.0	10.71	13.0

It was found that by connecting a supplementary source of current to the generating electrodes, iodine could be generated at a rate sufficient to balance the effect of esterification and diffusion. This source of current consisted of a 45-volt battery connected to the generating electrodes through a variable resistor. As the impedence of this circuit is very high compared to the resistance of the cell, this supplementary current remains essentially constant even during titrations which are made at maximum rates of current. Results obtained by the use of this technique are shown in Table IV. It can be seen from the values in the fifth column that the theoretical value of 10.71 coulombs is approached most closely in those cases where the effects of esterification and diffusion are minimized. This agreement indicates a one to one stoichiometry for the iodine-water reaction.

Table IV

Effect of Supplementary Current on the Coulometric Determination of Water with Karl Fischer Reagent

One ml of Standard Water-Methanol Solution (1.62 mg H_2O/ml)

Conditions	Current, amp	Time, sec	Coulombs	Coulombs/mg H_2O Theory	Coulombs/mg H_2O Found
No $C_3H_2O_2$ present	0.0876	200	17.5	10.71	10.8
$C_3H_2O_2$ present	0.1024	174	17.7		10.9
$C_3H_2O_2$ present	0.0496	338	16.8		10.4
$CH_3CH(NH_2)CH(NH_2)$ and $C_3H_2O_2$ present	0.109	166	18.1		11.2

The presence of propanediamine, 1-2, hereafter referred to as PDA, in the solution of methanol, acetic acid, and spent Fischer reagent effectively increased the rate of iodine consumption. This effect might be attributed to a catalytic acceleration of either the esterification reaction of the acetic acid or the parasitic side reactions which are normally associated with the decomposition of Fischer reagent. Additional water could also be produced by the dehydration of amine salts to amides. The above sources of iodine consumption were not distinguished. In this report, the total error introduced by side reactions is designated as an effect of esterification.

It was possible, by the use of the separate source of current, to balance the effect of esterification reasonably well, but the rate of esterification varied with the amount of PDA present and difficulties were encountered when attempts were made to titrate water in PDA. If the effects of esterification were "blanked" before the addition of the sample, the added PDA caused an increase in the esterification rate and this increase could not be conveniently cancelled. This effect produced high results and in the determination of water in the range of 0.1 per cent this change in esterification rate is very significant. As this increase can be of the same order of magnitude as the rate of generation of iodine, it is obvious that titration under these conditions is impossible.

During this study on methods of eliminating the error due to esterification, Lee[4] found that when salicylic acid was used to neutralize the amine with ethylene glycol as a diluent, much less esterification was noted. Amperometric methods of end-point determination, such as the "dead-stop" technique, could not be applied to these solutions because of their low conductivity. It was found that a potentiometric type, indicator system[9] provided a sensitive indication of the end point. This system required the use of two platinum electrodes which were polarized by a constant current of approximately one microampere from a 45-volt battery with a 40-megohm resistor connected in series. The electrodes developed a potential of approximately 400 millivolts in solutions containing water, while the potential dropped to zero when excess iodine was present. This potential was measured with a Beckman Model M pH meter with a potential of approximately 200 millivolts being used as the end point. A schematic diagram of the electrical circuits is shown in Figure 2.

Some titrations of standard water-methanol solutions were made in ethylene glycol which contained PDA in the presence of excess salicylic acid. These titrations were made without using the separate current to cancel the effect of slight esterification. Results which were only 2 to 3 per cent greater than the theoretical value were obtained. These results are shown in Table V.

UNCLASSIFIED
ORNL-LR-DWG. 7051

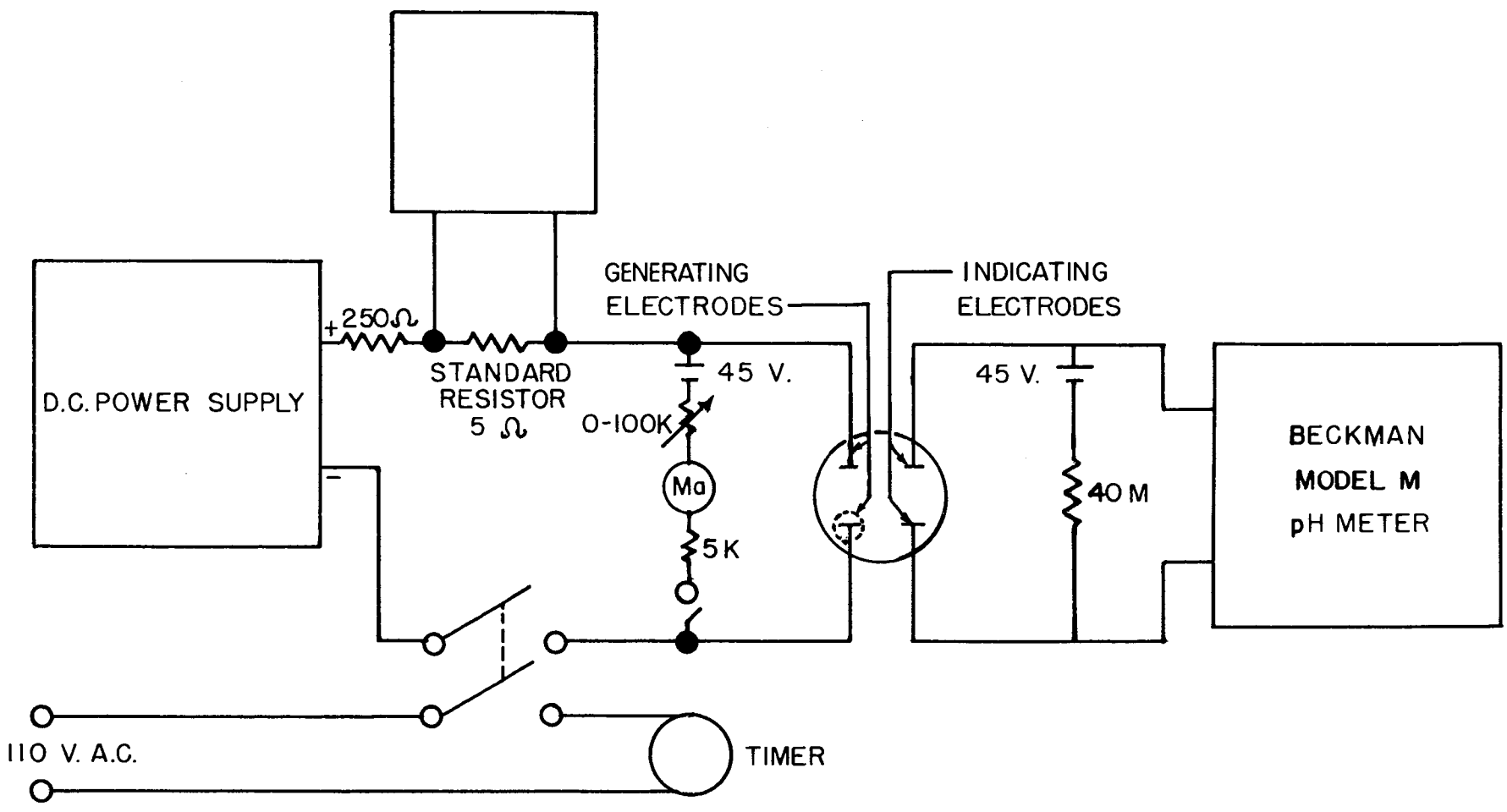

FIGURE 2
SCHEMATIC DIAGRAM OF THE APPARATUS FOR THE COULOMETRIC DETERMINATION OF WATER BY THE KARL FISCHER METHOD.

Table V

Effect of Salicylic Acid in Ethylene Glycol Medium in the Presence of PDA on the Coulometric Determination of Water with Karl Fischer Reagent

One ml Standard Water-Methanol Solution (1.62 mg H_2O/ml)
Salicylic acid, 10 g
PDA, 1 ml
No supplementary current

Current, amp	Time, sec	Coulombs	Coulombs/mg H_2O Theory	Coulombs/mg H_2O Found
0.109	165	18.0	10.71	11.1
0.111	159	17.7		10.9

The stability of these solutions may be improved further by allowing them to stand for several hours at the Karl Fischer end point after the addition of a small quantity of PDA. The preparation and ageing of the solutions can be carried out more conveniently by using a storage vessel connected directly to the titration cell.

RESULTS

A comparison of the results of determinations of water in a sample of PDA that were carried out in two different electrolytes are shown in Table VI.

Table VI

Comparison of Results of the Coulometric Titration of Water in a Sample of Propylenediamine in Methanol and Ethylene Glycol Media

PDA, 0.50 ml

No.		Current, amp	Time, sec	Coulombs	Water Per Cent
	Methanol-excess acetic acid				
1		0.040	60	2.40	0.052
2		0.042	54	2.29	0.049
3		0.097	20	1.94	0.042
4		0.088	26	2.30	0.050
5		0.044	84	3.70	0.070
				Average	0.053
	Ethylene glycol-excess salicylic acid				
6		0.067	28	1.86	0.040
7		0.050	30	1.50	0.032
8		0.051	36	1.85	0.040
9		0.063	35	2.20	0.047
10		0.065	31	2.00	0.044
				Average	0.041
	Ethylene glycol - insufficient salicylic acid				
11		0.029	287	8.35	0.180

The results of the first five determinations which were carried out in an acetic acid-methanol medium are significantly higher than those of the latter analyses in which the salicylic acid-ethylene glycol solutions were used. The greater titration values are attributed to the increase in the rate of esterification after the addition of the samples. This effect was most pronounced in the fifth determination in which the current required to maintain the end point, changed from an initial value of 0.04 to 0.06 amperes

at the end of the titration. In determinations 6 to 11, which were carried out in the presence of ethylene glycol and salicylic acid, the rate of esterification was found to be only about one-fifth as large as that which was obtained in solutions of acetic acid in methanol. The addition of PDA to these solutions did not change the esterification rate appreciably, therefore, the blanking with the supplementary current was effective. The last determination (No. 11) is included to illustrate the effect of incomplete neutralization of the PDA. In this case the solution contained 3 ml of PDA and only 10 g of salicylic acid.

A series of determinations of water in a sample of PDA which had recently been distilled over calcium carbide is shown in Table VII.

Table VII

Reproducibility of the Titration of Water in Propylenediamine

Day	PDA ml	Current, amp	Time, sec	Coulombs	Water Per Cent	Water Corrected Per Cent
1st	1.00	0.0420	13.7	0.575	0.0062	0.0062[a]
	1.00	0.0204	36	0.735	0.0079	0.0079
	1.00	0.0234	32	0.750	0.0081	0.0081
	1.00	0.0250	30	0.750	0.0081	0.0081
2nd	0.90	0.0250	30	0.750	0.0090	0.0079
3rd	1.00	0.0174	53	0.922	0.0099	0.0077
	1.00	0.0140	70	0.980	0.0105	0.0083
4th	0.95	0.0124	80	0.990	0.0113	0.0080
	0.95	0.0200	50	1.000	0.0114	0.0081
			Average			0.0080
			Standard Deviation			0.0002
			Coefficient of Variation, per cent			2

[a] this result was not included in the calculation of the precision

The increase in water content, as shown in the sixth column, is believed to be due to the entrance of moisture into the sample bottle during sampling and while standing over a period of several days in a desiccator containing anhydrous magnesium perchlorate. If a correction of 0.0011 per cent is made for the daily increase in water concentration, the results so corrected show good reproducibility of water content. At this concentration of water the hygroscopicity of PDA is very evident, but the practicability of the sampling technique is shown by the reproducible results obtained on any one day. The precision of the method at different concentrations of water in PDA is shown in Table VIII.

Table VIII

Titration of Water at Different Concentration Levels

1.00 ml Propanediamine, 1-2

Current, amp	Time, sec	Coulombs	Water	Coefficient of Variation
			Per Cent	
0.0234	18	0.42	0.0045	
0.0230	20	0.46	0.0050	7.5
0.0406	71.1	2.89	0.0310	
0.0390	73.7	2.87	0.0309	2.7
0.0400	75.7	3.03	0.0325	
0.0580	246	14.3	0.153	
0.0580	245	14.2	0.153	
0.0590	234	13.8	0.148	1.4
0.0580	242	14.0	0.151	
0.0550	253	13.9	0.150	

The first determinations were carried out on the driest sample of PDA which was obtainable during this investigation. The concentration of water in the sample increased rapidly after two aliquots were withdrawn. No further increase in the precision of the determination was noted in the analyses of samples of higher water concentration, and the precision probably corresponds to the precision of measurement of sample aliquots. A coefficient of variation

of 1 to 2 per cent in the measurement of the samples was determined by weighing aliquots of PDA that were delivered by one-ml syringes.

Since it was not possible to prepare a standard solution of water in PDA the standard addition technique was used to establish the accuracy of the method. When quantities of water which corresponded to 0.198 and 0.061 per cent water were added to samples of PDA, the concentration of water was found to be increased by 0.197 and 0.062 per cent, respectively. This represents a recovery of 99.5 and 102 per cent of the added water. The method was also tested by determining the water content of other organic reagents which were available in a relatively anhydrous state. Six determinations were carried out on each sample by both the coulometric and conventional Karl Fischer titration methods. The results of these analyses are shown in Table IX.

Table IX

Determination of Water in Various Organic Compounds by Coulometric and Conventional Karl Fischer Methods

	Coulometric Method			Karl Fischer[a] Method	Difference
Compound	Sample Volume, ml	Water A, %	Coefficient of Variation, %	Water B, %	A-B
Methyl Alcohol	0.2	0.26	4.5	0.25	+0.01
Isopropyl Alcohol	1	0.065	4.5	0.058	+0.007
Ethylene Glycol	0.5	0.158	3.2	0.13	+0.03
Methyl Acetate	0.2	0.089	1.6	0.091	-0.002
Dioxane	0.2	0.39	1.2	0.36	+0.03
Diethyl Ether	1	0.0094	1.0	0.007	+0.002
Analine	0.2	0.42	1.5	0.41	+0.01
Hexane	1	0.0038	1.2	0.006	-0.002
Toluene	1	0.039	3.6	0.025	0.014

[a]Water determined by direct titration of 10-ml samples with standardized Karl Fischer reagent.

Because of the small volumes of titrant used in the conventional titration and the small sample aliquots which were analyzed by the coulometric procedure, the observed differences are not truly representative of the agreement between the two methods; however, the agreement is reasonable for all the compounds

except toluene. Since the concentration of water in the toluene was near saturation, the concentration may have been altered by a change in temperature of the samples. The reproducibility of the determination of water in these substances (1 to 4.5 per cent) is comparable to that observed in the analysis of PDA. The somewhat poorer precision in the analysis of the alcohols may be due to an increase in the rate of esterification after the addition of the samples or may be indicative of a tendency towards less precise measurements of these liquids in syringes. The use of salicylic acid is not required for the analysis of samples which do not contain strong amines, but ethylene glycol should be used as a diluent for solutions of maximum stability. An inorganic salt such as an alkali halide must be added to provide an electrolyte of adequate conductivity. The stability of such solutions is at least equivalent to that of the solutions which contain salicylic acid.

Samples of toluene which had been dried by fractional distillation and by refluxing over calcium carbide were analyzed to determine the ultimate sensitivity of the method. Concentration of water of approximately 30 μg/ml were found in the distilled toluene while concentrations as low as 5 μg/ml were obtained after refluxing over calcium carbide. It was noted that the addition of a 2-ml sample of the most thoroughly dried material produced only a 50 millivolt change in the potential between the indicating electrodes.

The absolute standard deviation for the determination of water on moisture-free solutions corresponded to 1 to 2 μg of water, which represents a coefficient of variation of approximately 20 per cent on the calcium carbide-dried samples. After three aliquots had been withdrawn from each sample bottle the concentration of water in the samples increased rapidly. This increase is probably due to the introduction of moist air into the sample bottles and is indicative of the hygroscopic nature of the samples. It would appear, therefore, that a

part of the variation comes about as a consequence of sample contamination during transfer rather than from the inherent uncertainty in the titration procedure, but in consideration of the small change in the potential of the indicating electrodes, the assignment of 1 or 2 μg for the deviation of the titration is reasonable. Similar values for the standard deviation of the titration may be calculated from the analyses of those other samples which contain less than 100 μg/ml by applying a correction for the deviation in measurement of the sample volume.

DISCUSSION

Coulometric titration is the only method which is applicable to the precise determination of water which is present in PDA in concentrations below 0.1 per cent. The titration of such samples by the conventional Karl Fischer method is impractical because of the limitation on the volume of sample aliquots which is imposed by the exothermic neutralization reaction. The method also appears to be applicable to the determination of water in all liquid samples which can be titrated with Karl Fischer reagent, but is of limited value in the analysis of solid materials because of the contamination of both the sample and atmosphere of the titration vessel by water during the addition of the samples. The volume of PDA which can be neutralized in a given volume of solvent is limited by the solubility of salicylic acid in ethylene glycol. When a volume of generator electrolyte of 70 ml is used the solution must be replaced after the addition of three ml of PDA. No such limitation exists for samples which do not contain strong amines.

In the titration of the PDA sample containing 0.005 per cent water, the driest obtained to date, the coefficient of variation was found to be approximately 7 per cent. With samples containing water in the order of 0.01 per cent the coefficient of variation is reduced to 2.5 per cent. When the water is above 0.1 per cent the coefficient of variation is 1.5 per cent.

The precision of the method is primarily determined by two factors; the precision of the titration, which is limited by the sensitivity of the indicating electrodes, and corresponds to a standard deviation of 1 to 2 μg of water; and the relative deviation in the measurement of the sample volume of a 1-ml syringe. Since the coefficient of variation of the measurement of samples is less than 2 per cent it is apparent that the inherent uncertainty of the titration is the more important factor in the analysis of samples which contain less than 100 μg of water. When larger quantities of water are titrated the precision approaches the precision of sampling.

Additional factors which affect the precision include the error in the measurement of the integrated (i x t) product, and the errors introduced by contamination of the samples during transfer. The first factor is not significant when an appropriate titration current is used. The effect of contamination is difficult to evaluate but can be minimized by carrying out the transfer as rapidly as possible with oven-dried syringes.

The absolute deviation of the titration compares favorably with the limiting sensitivity of 10 μg of water which was reported by Wiberley[12] for micro titration with Karl Fischer reagent. The absolute precision of the coulometric titration could undoubtedly be reduced by carrying out the titrations in a smaller volume of electrolyte. This technique would be of limited value in the analysis of PDA because a minimum ratio of the volume of electrolyte to sample must be maintained to insure complete neutralization of the strong amine.

While the lower limit of water concentration is determined by the sensitivity of the indicating electrodes, a practical upper limit is imposed by the time required for the titration. With the sample power supply used in this investigation a maximum stable current of approximately 100 ma could be obtained. At this rate of generating current the titration of 1 mg of water requires

approximately 100 seconds. For the repetitive titration of one-ml aliquots the time required for the analyses of samples which contain more than 0.5 per cent water becomes prohibitive since the generating current must be measured repeatedly throughout the titration. The theoretical upper limit of the titration which is determined by the quantity of sulfur dioxide in the electrolyte solution was never exceeded during these experiments.

The procedure has been used extensively for the determination of water in PDA and for occasional analyses of other organic solvents which include higher alcohols, carboxylic acids, hydrocarbons, and halogenated hydrocarbons. An automatic coulometric titration apparatus has been used to provide a more constant current and to reduce the degree of attention required during both titration and standby periods. This instrument consists of a constant current power supply which is actuated, together with a timer, when the potential of the indicating electrodes exceeds a preset value. The generating current is automatically terminated when the potential of the electrodes is reduced to the initial value. The apparatus will deliver a maximum generating current of 270 ma and a maximum supplementary current of 10 ma. The construction and use of this instrument will be described in detail in another report.

It is suggested that the use of a constant supplementary current can readily be applied to the coulometric titration of other systems in which an interfering substance is introduced at a constant rate. An obvious application is the pretitration of interfering contaminants in the generator electrolyte in coulometric titrations with an externally generated reagent.

SUMMARY

The feasibility of the coulometric determination of water by the electrolytic generation of iodine in a solution of depleted Karl Fischer reagent has been demonstrated. It was found that iodine is generated with 100 per cent current efficiency and the stoichiometry of its reaction with water is the usual one mole of water titrated by each mole of iodine.

Water was successfully titrated in strongly basic PDA and in other organic solvents. The interference of side reactions that consume iodine is minimized by neutralization of the amine with a solution of salicylic acid in ethylene glycol, rather than neutralization with acetic acid in methanol. The residual interference of side reactions and diffusion of water into the anode compartment of the titration vessel are effectively eliminated by a constant supplementary generating current, which is adjusted to maintain the solution at the end point.

The coulometric method offers increased precision over the conventional Karl Fischer titration in the determination of trace quantities of water. Samples which contained 10 μg of water have been titrated with a coefficient of variation of approximately 20 per cent. The increased sensitivity of the method is of prime importance in the analysis of strong amines for which the sample volume is limited to a few ml by the exothermic neutralization reactions. The coefficient of variation of the determination of water in one-ml samples of PDA was found to vary from 7 per cent for samples which contained 0.005 per cent water to 1.5 per cent for samples which contained 0.1 per cent water.

LITERATURE CITED

(1) G. R. Cornish, Plastics (London), 10, 99 (1946).

(2) Karl Fischer, Angew. Chem., 48, 394 (1935).

(3) C. W. Foulk, and A. T. Bawden, J. Am. Chem. Soc., 48, 2045 (1926).

(4) D. A. Lee, "The Determination of Water in Propanediamine, 1-2 by Use of Karl Fischer Reagent," ORNL-53-8-176, October 5, 1953.

(5) J. Mitchel, Jr., and D. M. Smith, Aquametry, p. 99, Interscience Publishers, New York, 1948.

(6) R. J. Myers, and E. H. Swift, J. Am. Chem. Soc., 70, 1047 (1948).

(7) J. D. Neuss, M. G. O'Brien, and H. A. Frediani, Anal. Chem. 23, 1332 (1951).

(8) W. J. Ramsey, P. S. Farrington, and E. H. Swift, Anal. Chem., 22, 332 (1950).

(9) C. N. Reilley, W. D. Cooke, and N. H. Furman, Anal. Chem., 23, 1223 (1951).

(10) D. M. Smith, W. M. D. Bryant, and J. Mitchell, Jr., J. Am. Chem. Soc., 61, 2407 (1939).

(11) L. Szebelledy, and Z. Somogyi, Z. Anal. Chem., 112, 385 (1938).

(12) J. S. Wiberley, Anal. Chem., 23, 656 (1951).