MARTIN MARIETTA ENERGY SYSTEMS LIBRARIES
3 4456 0360759 5

[redacted]

CENTRAL RESEARCH LIBRARY
DOCUMENT COLLECTION

AEC RESEARCH AND DEVELOPMENT REPORT

ORNL-1908
Progress

54

AEC RESEARCH AND DEVELOPMENT REPORT

[redacted]

STABLE ISOTOPE RESEARCH AND PRODUCTION

DIVISION SEMIANNUAL PROGRESS REPORT

FOR PERIOD ENDING MAY 20, 1955

DECLASSIFIED
CLASSIFICATION CHANGED TO:
BY AUTHORITY OF: E. J. Murphy 6-12-57
BY: J. C. Stamber 8-31-59

CENTRAL RESEARCH LIBRARY
DOCUMENT COLLECTION
LIBRARY LOAN COPY
DO NOT TRANSFER TO ANOTHER PERSON
If you wish someone else to see this document, send in name with document and the library will arrange a loan.

OAK RIDGE NATIONAL LABORATORY
OPERATED BY
UNION CARBIDE NUCLEAR COMPANY
A Division of Union Carbide and Carbon Corporation
UCC
POST OFFICE BOX P · OAK RIDGE, TENNESSEE

[redacted]

[redacted]

ORNL-1908 5A

This [redacted] consists of 72 pages.
Copy [redacted] Series A.

Contract No. W-7405-eng-26

STABLE ISOTOPE RESEARCH AND PRODUCTION DIVISION SEMIANNUAL PROGRESS REPORT

For Period Ending May 20, 1955

C. P. Keim, Director

DATE ISSUED

AUG 25 1955

OAK RIDGE NATIONAL LABORATORY
Operated by
UNION CARBIDE NUCLEAR COMPANY
A Division of Union Carbide and Carbon Corporation
Post Office Box P
Oak Ridge, Tennessee

[redacted]

[redacted]

SYSTEMS LIBRARIES

3 4456 0360759 5

[redacted]

INTERNAL DISTRIBUTION

1. C. E. Center
2. Biology Library
3. Health Physics Library
4-6. Central Research Library
7. Reactor Experimental Engineering Library
8-12. Laboratory Records Department
13. Laboratory Records, ORNL R.C.
14. C. E. Larson
15. L. B. Emlet (K-25)
16. J. P. Murray (Y-12)
17. A. M. Weinberg
18. E. H. Taylor
19. E. D. Shipley
20. W. H. Jordan
21. F. C. Vonderlage
22. J. A. Swartout
23. S. C. Lind
24. F. L. Culler
25. A. H. Snell
26. A. Hollaender
27. M. T. Kelley
28. G. H. Clewett
29. K. Z. Morgan
30. T. A. Lincoln
31. A. S. Householder
32. C. S. Harrill
33. C. E. Winters
34. D. W. Cardwell
35. E. M. King
36. D. D. Cowen
37. P. M. Reyling
38. C. P. Keim
39. S. Cromer
40. B. M. Lang (K-25)
41. R. S. Livingston
42. R. F. Hibbs (Y-12)
43. C. E. Normand
44. J. R. McNally, Jr.
45. C. R. Baldock
46. Boyd Weaver
47. G. C. Williams
48. R. W. Johnson
49. E. J. Murphy
50. P. S. Baker
51. M. J. Skinner
52. A. F. Rupp
53. J. L. Gabbard
54. R. A. Charpie
55. G. E. Boyd
56. ORNL Document Reference Library, Y-12 Branch
57. J. E. Keeton
58. L. O. Love
59. A. O. C. Nier (consultant)
60. L. P. Smith (consultant)
61. J. C. Bailar, Jr. (consultant)
62. W. R. Brode (consultant)

EXTERNAL DISTRIBUTION

63-68. Argonne National Laboratory
69-70. Atomic Energy Commission, Washington
71-73. Brookhaven National Laboratory
74-75. Carbide and Carbon Chemicals Company (K-25 Plant)
76. Chicago Patent Group
77. Chief of Naval Research
78-80. duPont Company, Augusta
81. General Electric Company, Richland
82. Hanford Operations Office
83. Iowa [redacted]
84-85. Knol[redacted] Power Laboratory
[redacted]
87. Naval Research Laboratory

[redacted]

[redacted]

88-89. New York Operations Office
90. Patent Branch, Washington
91. Savannah River Operations Office, Augusta
92. duPont Company, Wilmington
93-95. University of California Radiation Laboratory, Berkeley
96-110. Technical Information Service, Oak Ridge
111. Division of Research and Medicine, AEC, ORO

[redacted]

[redacted]

Reports previously issued in this series are as follows:

Y-497	July 1, 1949 to September 30, 1949
Y-550	October 1, 1949 to December 31, 1949
Y-586	January 1, 1950 to March 31, 1950
Y-636	April 1, 1950 to June 30, 1950
Y-685	July 1, 1950 to September 30, 1950
Y-723	October 1, 1950 to December 31, 1950
Y-765	January 1, 1951 to March 31, 1951
Y-797	April 1, 1951 to June 30, 1951
Y-821	July 1, 1951 to September 30, 1951
ORNL-1228	October 1, 1951 to December 31, 1951
ORNL-1298	January 1, 1952 to March 31, 1952
ORNL-1356	April 1, 1952 to June 30, 1952
ORNL-1434	July 1, 1952 to September 30, 1952
ORNL-1483	Period Ending December 31, 1952
ORNL-1563	Period Ending May 20, 1953
ORNL-1617	Period Ending November 20, 1953
ORNL-1732	Period Ending May 20, 1954
ORNL-1829	Period Ending November 20, 1954

[redacted]

[redacted]

CONTENTS

PUBLICATIONS vii

MEETINGS AT WHICH PAPERS WERE PRESENTED vii

OTHER MEETINGS ATTENDED BY MEMBERS OF THE DIVISION vii

TRAVELING LECTURES viii

PAPERS CONCERNING USAGE OF ENRICHED ISOTOPES viii

SPECTROSCOPY RESEARCH LABORATORY 1

- Introduction 1
- Nuclear Resonance 1
  - Project NR-1 – Table of Nuclear Moment Data 1
  - Project NR-2 – Nuclear Magnetic-Resonance Equipment 1
- Microwave Spectroscopy 1
  - Project M-1 – Microwave Spectrum of Vinyl Fluoride 1
  - Project M-2 – Microwave Spectrum of Vinyl Acetylene 2
  - Project M-3 – Square-Wave Generator for Stark Effect 2
- Infrared Spectroscopy 3
  - Project IR-1 – Infrared and Microwave Spectra of Formyl and Deutero-Formyl Fluorides 3
  - Project IR-2 – Infrared Spectra of Tritium Compounds 4
- Optical Spectroscopy 6
  - Project OS-1 – Pressure-Scanning Interferometry 6
  - Project OS-2 – Polonium Hyperfine Structure 6
  - Project OS-3 – Zeeman Spectroscopy 7
  - Project OS-4 – Thorium and Uranium Spectra 8
  - Project OS-5 – Atomic Energy States of Plutonium 9
  - Project OS-6 – Back-Goudsmit Contributions to Hyperfine-Structure Analysis 9
- Spectrochemistry 10
  - Project SC-1 – General Spectrochemical Analysis 10
  - Project SC-2 – Rare-Earth Mixtures 10
  - Project SC-3 – Photoelectric Spectrochemistry 11
  - Project SC-4 – Modifications of Paschen Spectrograph and Source Equipment 11
  - Project SC-5 – Spectrography of Uranium Isotopes 12
- X Rays 14
  - Project X-1 – X-Ray Diffraction Analysis 14
- Publications 14

MASS SPECTROMETER LABORATORY 16

- Introduction 16
- Uranium in Sea Water 16
- Analysis of Fissionable Material Used in MTR Tests 16
- Investigation of ARE Fuels 18
- Uranium-Burnup Measurements 18
- Technetium from Cyclotron-Bombarded Molybdenum 19

[redacted]

[redacted]

Search for Tc^{98} in Nature 21
MTR-Irradiated Tc^{99} 21
Fission-Product Samarium and Zirconium 22
Vapor State of Inorganic Solids 22
New Method for Isotopic Analysis of Boron 23
Stable Isotope Analyses 24
The New 6-in. Radius, 60-deg-Sector Mass Spectrometer, MS-D 24
Two-Stage Mass Spectrometer Program 26
Titanium Evapor-Ion Pumps 28
Polyethylene Stopcock Grease 30
Effusion Cell Studies with a Mass Spectrometer 30

STABLE ISOTOPE SEPARATION RESEARCH AND CALUTRON OPERATIONS 31
Introduction 31
Isotope Research and Collection 31
Calcium, Series GV-XAX 31
Rubidium, Series GX-XBX 32
Tantalum, Series GY-XBX 32
Chromium, Series GZ-XBX 34
Chromium, Series HA-XBX 34
Nitrogen, Series HB-XBX 35
Tellurium, Series HC-XAX 35
Declassified Reports 38

STABLE ISOTOPE CHEMISTRY 39
Introduction 39
Preparation of Charge Materials 39
Chemical Refinement of Isotopes 39
Chromium 39
Tantalum 39
Other Elements 40
Separation of Rare Earths 40
Publications 41

RESEARCH AND DEVELOPMENT STABLE ISOTOPES 42
Introduction 42
Special Services 42
Target Preparation 42
Special Procedures 43
Cooperative Calutron-Cyclotron Program 44
Separation of Stable Isotopes 45
Current Problems 47

UTILIZATION OF ENRICHED STABLE ISOTOPES 48

ORGANIZATION CHART 61

[redacted]

[redacted]

PUBLICATIONS

P. M. Griffin and J. R. McNally, Jr., "Zeeman Effect in the Spectrum of Plutonium," *J. Opt. Soc. Amer.* **45**, 63 (1955).

K. L. Vander Sluis and J. R. McNally, Jr., "Nuclear Spin of Uranium 235," *J. Opt. Soc. Amer.* **45**, 65 (1955).

G. K. Werner, D. D. Smith, S. J. Ovenshine, O. B. Rudolph, and J. R. McNally, Jr., "Further Investigations in the Spectro-Isotopic Assay Technique for Lithium," *J. Opt. Soc. Amer.* **45**, 202 (1955).

H. E. Walchli, *A Table of Nuclear Moment Data*, ORNL-1469, Supplement II (March 28, 1955).

H. M. Rosenstock, "Ionization and Dissociation Processes as Related to Molecular Structure," *Annual Report of ASTM Subcommittee E-14-II – Theoretical and Fundamental Aspects of Mass Spectrometry* (1955).

W. C. Davis and C. W. Sheridan, *Chemistry in the Electromagnetic Separation of Platinum Isotopes*, ORNL-1900.

Boyd Weaver, R. L. Bailey, and C. W. Sheridan, *Chemistry in the Electromagnetic Separation of Tantalum Isotopes*, ORNL-1902.

MEETINGS AT WHICH PAPERS WERE PRESENTED

E. L. Grove and J. A. Norris, *A Study of Matrix Effects in a Graphite Base Semi-Quantitative Procedure*, Pittsburgh Conference on Analytical Chemistry and Applied Spectroscopy, Pittsburgh, Penn., Feb. 28–March 4, 1955; also, Spring Meeting of the Southeastern Association of Spectrographers, University of Florida, Gainesville, Feb. 4, 1955.

J. R. McNally, Jr., *Source Considerations in High Resolution Spectroscopy*, Spring Meeting of the Southeastern Association of Spectrographers, University of Florida, Gainesville, Feb. 4, 1955.

J. H. Wise, J. R. McNally, and K. L. Vander Sluis, *A Preliminary Report on Isotope Shifts in the Cadmium Red Line*, American Physical Society Meeting, Washington, D. C., April 28–30, 1955.

E. Rona and L. O. Gilpatrick, *Uranium Analysis of Sea Water by Isotope Dilution*, American Geophysical Union, Washington, D. C., May 3–6, 1955.

OTHER MEETINGS ATTENDED BY MEMBERS OF THE DIVISION

C. E. Melton, Virginia Academy of Science, Harrisonburg, Virginia, May 12–14, 1955.

C. P. Keim, Spring Meeting of the American Chemical Society, Cincinnati, Ohio, April 1–6, 1955.

P. M. Griffin and K. L. Vander Sluis, Winter Meeting of the Optical Society of America, New York City, April 7–9, 1955.

H. E. Walchli, National Institute of Radio Engineers Convention, New York City, March 21–24, 1955.

C. P. Keim, Meeting of American Physical Society, New York City, Jan. 26–29, 1955.

[redacted]

[redacted]

TRAVELING LECTURES

Boyd Weaver, *Recent Advances in the Chemistry of Rare Earths*, Georgia Institute of Technology, Nov. 22, 1954, and University of North Carolina, Feb. 11, 1955.

P. M. Griffin, *Principles and Applications of Echelle Spectroscopy*, University of Kentucky, Dec. 8, 1954.

J. R. McNally, Jr., *High Resolution Spectroscopy at the Oak Ridge National Laboratory*, Agricultural and Mechanical College of Texas, Jan. 11, 1955; Baylor University, Jan. 10, 1955; and Louisiana State University, Jan. 13, 1955.

Russell Baldock, *Current Research in Mass Spectrometry*, Alabama Polytechnic Institute, Jan. 14, 1955.

Russell Baldock, *Recent Applications in Mass Spectrometry*, Virginia Polytechnic Institute, Feb. 11, 1955.

Russell Baldock, *The Mass Spectrometer as an Analytical Tool*, University of Louisville, March 10, 1955.

C. P. Keim, *Isotopes – Natural and Man-made*, Birmingham Southern College, April 11, 1955.

K. L. Vander Sluis, *New Developments in the Theory of the Fabry-Perot Interferometer*, University of Kentucky, April 27, 1955.

PAPERS CONCERNING USAGE OF ENRICHED ISOTOPES

PUBLICATIONS	ISOTOPES USED
C. H. Johnson, H. B. Willard, and J. K. Bair (ORNL), "Total Cross Section of Li^6 for Neutrons," *Phys. Rev.* **96**, 985–988 (1954).	Li^6
V. L. Sailor, H. H. Landon, and H. L. Foote, Jr. (Brookhaven National Laboratory), "Neutron Resonances in the Rare Earth Elements," *Phys. Rev.* **96**, 1014–1018 (1954).	Various samarium
C. D. Moak, W. M. Good, and W. E. Kunz (ORNL), "Charged Particles from the Bombarument of Li^7 by He^3," *Phys. Rev.* **96**, 1363–1366 (1954).	Li^7
K. Murakawa (Institute of Science and Technology, Tokyo, Japan), "Hyperfine Structure of the Spectra of Nd and Gd," *Phys. Rev.* **96**, 1543–1546 (1954).	Nd^{143} Nd^{145}
G. J. Wasserburg (University of Chicago) and R. J. Hayden (Argonne National Laboratory), "Age of Meteorites by the A^{40}-K^{40} Method," *Phys. Rev.* **97**, 86–87 (1955).	K^{41}
B. E. Simmons, D. M. Van Patter, K. F. Famularo, and R. V. Stuart (University of Minnesota), "Coulomb Excitation of Neodymium," *Phys. Rev.* **97**, 89–92 (1955).	Nd^{150}
J. P. Schiffer (Yale University), "Energy Levels in Ca^{42} and Ca^{44}," *Phys. Rev.* **97**, 428–431 (1955).	Ca^{43}
B. Saraf (Bartol Research Foundation), "Energy Levels of Rh^{103} from the Decay of Pd^{103} and Ru^{103}," *Phys. Rev.* **97**, 715–720 (1955).	Pd^{102}

[redacted]

[redacted]

J. M. LeBlanc, J. M. Cork, and S. B. Burson (Argonne National Laboratory), "Radioactivities of Zn^{69} and Zn^{71}," *Phys. Rev.* **97**, 750–753 (1955).	Zn^{68} Zn^{70}
R. L. Macklin and H. E. Banta (ORNL), "Tritium Production from Lithium by Deuteron Bombardment," *Phys. Rev.* **97**, 753–757 (1955).	Li^{6} Li^{7}
E. Hebb (Indiana University), "Disintegration of Te^{131}," *Phys. Rev.* **97**, 987–990 (1955).	Te^{130}
W. E. Graves and A. C. G. Mitchell (Indiana University), "Disintegration of As^{71}," *Phys. Rev.* **97**, 1033–1037 (1955).	Ge^{70}
C. McClelland, H. Mark, and C. Goodman (Massachusetts Institute of Technology), "Electric Excitation of Heavy Nuclei by Protons," *Phys. Rev.* **97**, 1191–1199 (1955).	Various
G. M. Tremmer (Carnegie Institution of Washington), E. Ambler, and R. P. Hudson (National Bureau of Standards), "Alignment of Cerium-141 and Neodymium-147 Nuclei," *Phys. Rev.* **97**, 1212–1221 (1955).	Nd^{143} Nd^{145} Ce^{140}
J. A. McCarthy (Massachusetts Institute of Technology), "Search for Double Beta Decay in Ca^{48}," *Phys. Rev.* **97**, 1234–1235 (1955).	Ca^{48}
S. Bashkin and R. R. Carlson (State University of Iowa), "Gamma Rays from Proton Bombardment of Li^{6}," *Phys. Rev.* **97**, 1245–1249 (1955).	Li^{6}
M. E. Bunker and J. W. Starner (University of California), "Decay of Ti^{51} and Cr^{51}," *Phys. Rev.* **97**, 1272–1276 (1955).	Ti^{50}
N. Bloembergen and T. J. Rowland (Harvard University), "Nuclear Spin Exchange in Solids: Tl^{203} and Tl^{205} Magnetic Resonance in Thallium and Thallic Oxide," *Phys. Rev.* **97**, 1679–1698 (1955).	Tl^{203} Tl^{205}
J. M. LeBlanc, J. M. Cork, and S. B. Burson (Argonne National Laboratory), "Decay of the 3.5-min Metastable State of Sb^{122}," *Phys. Rev.* **98**, 39–40 (1955).	Sb^{121}
R. J. Mackin, Jr., W. B. Mims, and W. R. Mills, Jr. (California Institute of Technology), "Gamma Rays from the Deuteron Bombardment of Carbon-13," *Phys. Rev.* **98**, 43–47 (1955).	C^{13}
B. L. Cohen (ORNL), "Angular Distributions and Yields of Neutrons from (p,n) Reactions," *Phys. Rev.* **98**, 49–56 (1955).	Cu^{63} Ni^{60}
C. E. Mandeville, J. Varma, and B. Saraf (Bartol Research Foundation), "Iridium-194," *Phys. Rev.* **98**, 94–100 (1955).	Ir^{193}
M. E. Toms and W. E. Stephens (University of Pennsylvania), "Photoprotons from Lead-208 and Tantalum," *Phys. Rev.* **98**, 626–629 (1955).	Pb^{208}
M. J. Glaubman (Princeton University), "Radioactive Decay of 65-Hour Sb^{122}," *Phys. Rev.* **98**, 645–653 (1955).	Sb^{121}

[redacted]

[redacted]

F. A. Aschenbrenner (Massachusetts Institute of Technology), "Low-Energy Protons from Targets Bombarded by 15-Mev Deuterons," *Phys. Rev.* **98**, 657–666 (1955).	Various
M. A. Ihsan (Government College, Punjab, Pakistan), "Nuclear Energy Levels of Be^8 from Li^7 (d,n) Be^8," *Phys. Rev.* **98**, 689–691 (1955).	Li^7
J. W. Meadows (Harvard University), "(p,α) and $(p,\alpha\beta)$ Reactions at 100 Mev," *Phys. Rev.* **98**, 744–749 (1955).	Zn^{64} Zn^{66} Ga^{69}

[redacted]

[redacted]

STABLE ISOTOPE RESEARCH AND PRODUCTION DIVISION SEMIANNUAL PROGRESS REPORT

SPECTROSCOPY RESEARCH LABORATORY

J. R. McNally, Jr., Department Head

INTRODUCTION

The Spectroscopy Research Laboratory is concerned with research and development in the fields of nuclear magnetic resonance, microwaves, infrared and optical spectroscopy, spectrochemistry, and x rays. Research and development are directed toward determining fundamental spectroscopic data and deriving fruitful methods of analysis on isotopes, elements, and compounds pertaining to immediate Laboratory or long-range Commission needs.

Outstanding accomplishments during this semiannual period are as follows:

1. Infrared spectra of T_2O have been obtained for the first time (Project IR-2).
2. A novel technique for high-resolution spectroscopy has been investigated (Project OS-1).
3. The usefulness of the Back-Goudsmit effect in the interpretation of hyperfine structures has been investigated (Project OS-6).
4. An analytical procedure for rapid quantitative analysis of reactor steels has been developed (Project SC-3).
5. An MIT-designed square-wave generator has been improved significantly for microwave Stark-effect studies (Project M-3).
6. The nuclear spin of Po^{209} has been ascertained to be ½ (Project OS-2).

NUCLEAR RESONANCE

H. E. Walchli

Project NR-1 – Table of Nuclear Moment Data

Supplement II to ORNL-1469, *A Table of Nuclear Moment Data*, has been issued.

Project NR-2 – Nuclear Magnetic-Resonance Equipment

The nuclear magnetic-resonance equipment, which was installed in 1951, has been undergoing major overhauling. A new magnet regulator was constructed and was tested with the existing magnet, but because of modifications in the system the time constants built into the Varian Associates amplifier unit must be modified to permit a stable system. The nuclear magnetic-resonance spectrometer head, which has been giving considerable erratic operation, was disassembled. The insulation of the r-f transmitter coil was found to be poor where it passed through the ground shield. Because of the physical construction, proper repairs will be difficult to make, but they will be attempted before a new unit is purchased.

MICROWAVE SPECTROSCOPY

Project M-1 – Microwave Spectrum of Vinyl Fluoride

H. W. Morgan J. H. Goldstein[1]

Frequency measurements have been completed on the $J = 0 \longrightarrow 1$ and $J = 1 \longrightarrow 2$ rotational transitions of the vinyl fluoride isotopic molecules $C^{12}C^{12}H_3F$, $C^{12}C^{13}H_3F$, and $C^{13}C^{12}H_3F$. These molecules were observed both in natural abundance and, to increase the accuracy of the measurements, in samples of enriched C^{13} content. The observed frequencies and computed moments of inertia are presented in Table 1.

The structural parameters of the molecule have been computed from the moments by a perturbation technique. However, a study of the data indicates that the accuracy of the frequency measurements, ±0.05 megacycle, introduces an error of ±0.011 A in the C=C and C–F distances. This error occurs because of uncertainty in the position of the center carbon atom, which lies close to the center of gravity and thus makes a small contribution to the moment of inertia. The errors in the structural parameters can be reduced by the more accurate evaluation of the rotational constant a. To achieve this, measurements are being made on several transitions in a Q-type series ($\Delta J = 0$) in

[1]Consultant, Emory University, Atlanta, Ga.

[redacted]

TABLE 1. OBSERVED FREQUENCIES AND COMPUTED MOMENTS OF INERTIA

	$C^{12}C^{12}H_3F$	$C^{12}C^{13}H_3F$	$C^{13}C^{12}H_3F$
Transition			
$0_{00} \longrightarrow 1_{01}$	19755.01	19738.83	19154.31
$1_{10} \longrightarrow 2_{11}$	41028.57	41003.04	39744.74
$1_{11} \longrightarrow 2_{12}$	37991.27	37952.07	36812.34
$1_{01} \longrightarrow 2_{02}$	39477.97	39445.40	38279.95
Rotational Constants			
a	63838.58	63711.25	63505.04
b	10636.83	10632.16	10295.24
c	9118.18	9106.67	8859.04
Asymmetry Parameter			
K	−0.94449	−0.94438	−0.94744

which the frequencies are primarily dependent upon the parameters a and c.

The dipole-moment components along the inertial axes have been determined as $\mu_a = 1.27 \pm 0.01$ and $\mu_b = 0.72 \pm 0.01$ Debye.

Project M-2 – Microwave Spectrum of Vinyl Acetylene

H. W. Morgan J. H. Goldstein

A final report will be issued following completion of Oracle calculations involving the moments of inertia, the asymmetry parameter, and the centrifugal distortion constants of the vinyl acetylene molecule.

Project M-3 – Square-Wave Generator for Stark Effect

O. B. Rudolph H. W. Morgan

The ideal "Stark field" is a positive rectangular or square wave, with a very short rise and fall time, and is flat topped, zero based, and continuously controllable in height or peak potential from zero to 1000 v or more, as illustrated by wave form A in Fig. 1. The original square-wave generator used in the microwave work was designed at the Massachusetts Institute of Technology (their drawing No. A-213-A). At best, the most nearly ideal wave form obtainable from it was similar to wave form B in Fig. 1. Pulse wave

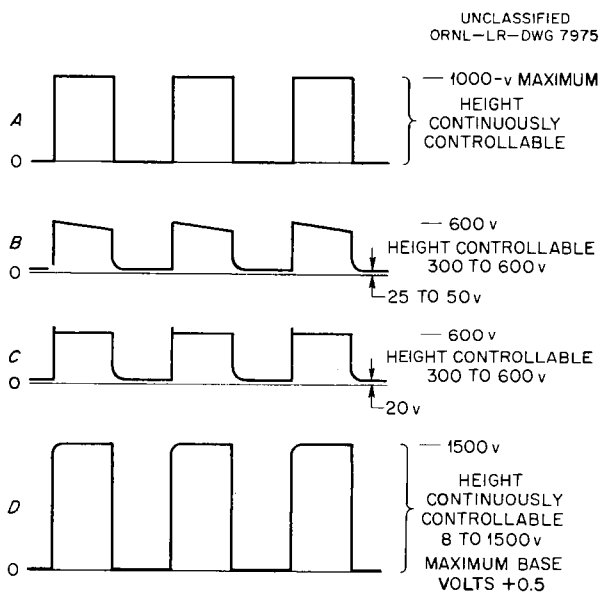

Fig. 1. Wave Forms and Characteristics.

height was controllable only over a range of 300 to 600 v. Any attempt to increase the pulse height above 600 v by increasing plate voltage resulted in the simultaneous breakdown of both 3C45 thyratron tubes, which fired continuously at an exceedingly high current rate because of the low circuit resistance and therefore had a very short

tube life. While the zero grid breakdown voltage of the 3C45 tubes may be 700 to 800 at steady plate voltage, the tubes are quite sensitive to rate-of-rise of plate voltage.

Changes introduced included a revised thyratron circuit to give characteristics similar to those of wave form *C* of Fig. 1, and introduction of a high-vacuum amplifier tube with other minor circuit changes to produce results as in wave form *D*.

The generator output wave form has been checked, and the following characteristics have been experimentally determined:

1. wave height, 8 to 1500 v, continuously controllable;
2. zero base, less than 0.5 above zero over-range;
3. slope of top, approximately 1 v at 700 v;
4. rise time, about 1% of pulse length.

Complete circuit diagrams and operating features will be included in a topical report to be issued shortly.

INFRARED SPECTROSCOPY

P. A. Staats H. W. Morgan
J. H. Goldstein

Project IR-1 – Infrared and Microwave Spectra of Formyl and Deutero-Formyl Fluorides

The Raman spectrum of deutero-formyl fluoride, in the liquid phase at −40°C, has been studied. The observed frequencies of the fundamental vibrations are given in Table 2. No absorption was found in the region representing the isotope shift from the band at 1244 cm^{-1} in formyl fluoride, previously considered to be ν_6, the C–H nonplanar bending vibration. A strong band did appear at 858 cm^{-1}, and this frequency has been assigned to ν_6. Predicting the isotope shift by the Teller-Redlich rule indicates that the ν_6 in formyl fluoride lies at a frequency close to the center of the very intense C–F stretching vibration, which could explain why it has not been identified.

TABLE 2. DCOF FUNDAMENTAL FREQUENCIES

	Type of Bond Vibration	Frequency (cm^{-1})		
		Gas	Liquid	Solid
ν_1	C–D stretching	2270	2287	2331
ν_2	C=O stretching	1793	1777	1769
ν_3	C–D bending (planar)	968	967	951
ν_4	C–F stretching	1074	1048	1052
ν_5	F–C=O bending	658	658	664
ν_6	C–D bending (nonplanar)	857	858	864

In conjunction with members of the Mathematics Panel, a method has been devised whereby the Oracle can be used to determine the diagonal *F* matrix in the secular equation

$$|FG - \lambda E| = 0 ,$$

where *G* is the computed kinetic energy matrix and the λ's are the observed fundamental frequencies of the molecule. The elements of *F* are the force constants. The units are selected to conform to the scheme of Wilson *et al.*[2] (*F*, dyne/cm; *G*, g^{-1}; and λ, sec^{-2}). These constants have been computed for HCOF and are presented in Table 3, together with the predicted and observed frequencies for DCOF. The agreement, with an average deviation of 2.6%, is considered quite satisfactory.

In all but the simplest molecules, isotope frequency shifts are used only for the verification of vibrational assignments. In theory, these shifts allow the evaluation of the off-diagonal terms, or interaction constants, in the *F* matrix. In practice, the determination of these terms has been attempted in only a few cases,[3,4] and they involved major difficulties in computation. Attempts are now being made to set up a procedure for the Oracle which will allow determination of *F* matrix elements, diagonal and off-diagonal, equal in number to the isotopic fundamental frequencies available. With the increased resolution of the newer commercial infrared spectrometers and the availability of separated isotopes, such a technique would allow a complete study to be made of the vibrational interactions in numerous complex molecules.

No further investigations were made of the microwave spectrum. A. H. Nielsen of the University of Tennessee is currently studying the rotational fine structure of certain of the bands in both the HCOF and DCOF spectra in an effort

[2] E. B. Wilson, J. C. Decius, and P. C. Cross, *Molecular Vibrations*, McGraw-Hill, New York, 1955.

[3] L. M. Sverdlov, *Doklady Akad. Nauk S.S.S.R.* 91, 503 (1953).

[4] B. L. Crawford, Jr., and T. Shimanouchi, University of Minnesota, personal communication.

to evaluate the rotational and centrifugal distortion constants and to determine the structural parameters.

Project IR-2 – Infrared Spectra of Tritium Compounds

A vacuum system, shown in Fig. 2, was constructed for the storage and handling of tritium gas and the synthesis (and decomposition) of tritium compounds. Two stainless steel tubes contain activated uranium metal, in which tritium is stored as UT_3. One contains the tritium as received, and the other holds the quantity of gas which has been used in synthesis and which may be contaminated by hydrogen. The attached glass apparatus contains CuO for the synthesis of T_2O, and uranium chips are employed in the conversion of T_2O to tritium gas.

The infrared cell shown in Fig. 2 is a 10-cm Perkin-Elmer gas cell, gold plated and equipped with AgCl windows and heating coils. The side arm may be cooled with liquid nitrogen for quantitative transfer of the sample.

Fifty cubic centimeters of T_2O (gas) has been synthesized and is shown in Fig. 3 fluorescing in a tube attached to the vacuum system. The infrared spectrum of the 135-curie T_2O sample has been examined with a prism spectrometer over the region 2 to 15 μ. The bending vibration has been studied in some detail, and its structure is shown in Fig. 4. Energy-level computations on a rigid rotor model have been made for T_2O through $J = 12$, and from these data preliminary assignments have been made for certain low-energy transitions, as shown in Table 4. The band center occurs at 996 ± 1 cm^{-1}, in agreement with the predictions[5,6] of 1018 and 989 cm^{-1}. The band ν_3 has been observed at 2364 cm^{-1}, overlapped by ν_1 and the

[5] W. F. Libby, *J. Chem. Phys.* 11, 101 (1943).

[6] V. M. Tatevski, Zhur. Fiz. Khim. 25, No. 3, 274 (1951).

TABLE 3. HCOF DIAGONAL FORCE CONSTANTS AND PREDICTED FREQUENCIES FOR DCOF

Type of Bond Vibration	Force Constant ($\times 10^5$ dynes/cm)	Frequency (cm^{-1})	
		Observed	Predicted
C–H stretching	4.80	2270	2230
C=O stretching	11.34	1793	1779
C–F stretching	4.76	1074	1127
F–C=O bending	1.43	658	657
C–H bending (planar)	0.26	968	915

TABLE 4. PRELIMINARY ASSIGNMENTS IN THE ROTATIONAL STRUCTURE OF ν_2

Frequency (cm^{-1})		Separation (cm^{-1})		Assignment
R Type	P Type	Observed	Predicted	
1004.5	988.0	16.5	15.5	$1_{-1} \rightarrow 1_{+1}$
1006.0	986.5	19.5	18.9	$2_{-2} \rightarrow 2_0$
1008.7	982.5	26.2	24.8	$3_{-3} \rightarrow 3_{-1}$
1016.5	978.5	38.0	38.2	$2_{+2} \rightarrow 2_0$
1024.5	972.5	52.0	54.4	$2_{+1} \rightarrow 3_{+3}$
1037.0	961.7	75.3	76.1	$2_{-1} \rightarrow 3_1$

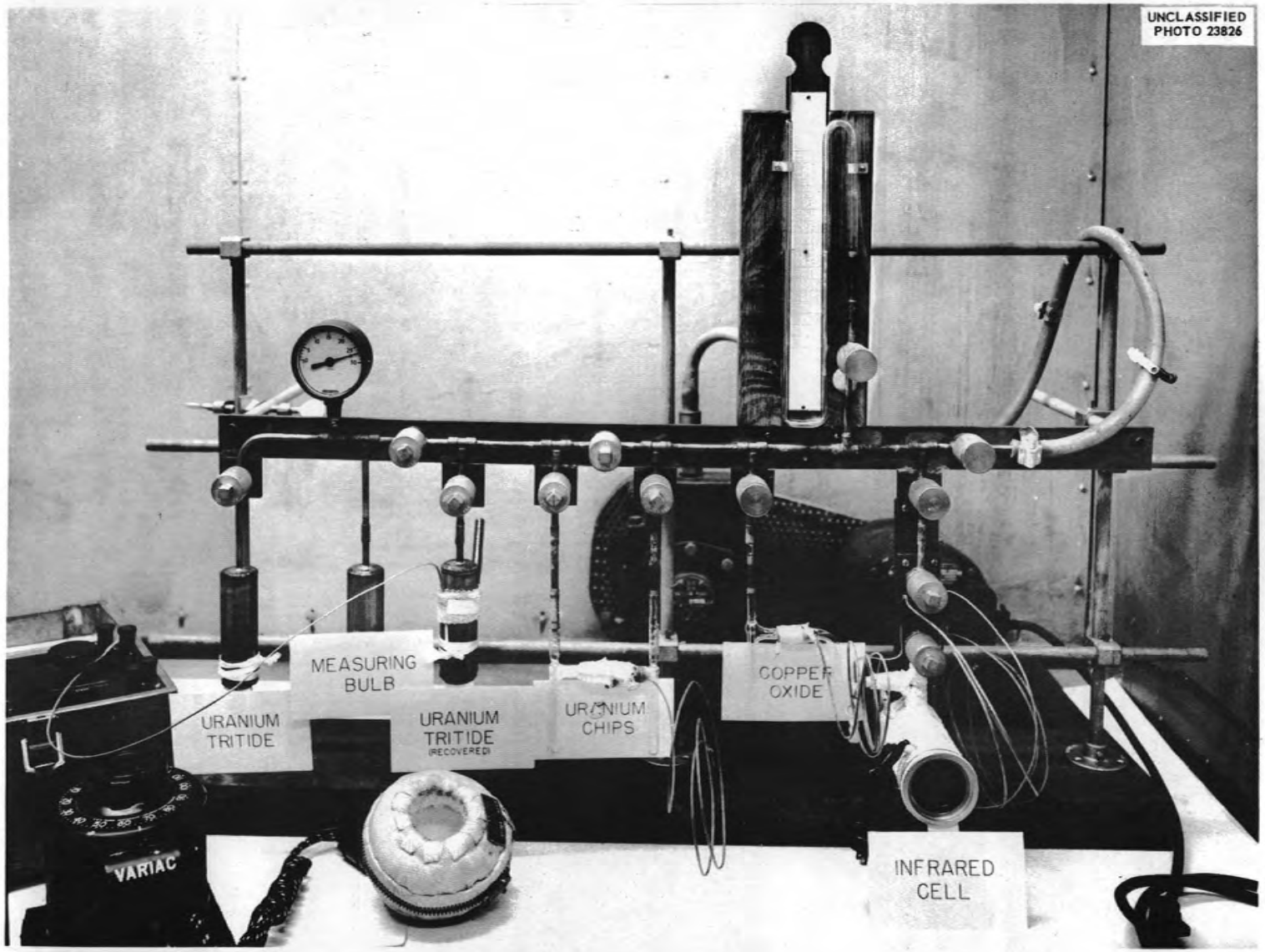

Fig. 2. Vacuum System for the Storage, Handling, and Synthesis of Tritium and Tritium Compounds.

Fig. 3. T_2O (51 mg) at −180°C, Fluorescing Under Its Own Beta Radiation.

strong overtone $2\nu_2$. Studies of these bands at higher resolution are in progress.

OPTICAL SPECTROSCOPY

Project OS-1 – Pressure-Scanning Interferometry

K. L. Vander Sluis W. F. Peed

The instrumentation for the pressure-scanning interferometer consists of a detecting system, which includes a photomultiplier tube and a Q-826 electrometer; a mercury manometer used as a pressure-to-electrical-signal transducer; and an X-Y recorder. At the present time the signal-to-dark-current ratio does not permit examination of weak lines.

The instrumentation, particularly the light-detection system, is being improved to permit observation of weak lines. These modifications consist basically in conversion to an a-c amplification system. A mechanical light modulator has been constructed, and development of a narrow band amplifier is under way. It is anticipated that a gain of at least 1000 in signal-to-noise ratio will be realized. In addition, components have been ordered to permit greater dispersion in the pressure-recording system.

Preliminary investigation has shown the feasibility of extending the use of the pressure-scanning interferometer to pressure scanning with the compound interferometer. The usual experimental objections to the compound interferometer – the serious aperture-limitation effects – do not arise, since the angles of the pattern observed are very small.

The wave-number dispersion for a pressure-scanning system is given by

$$\frac{d\sigma}{dP} = \frac{\Delta\mu_0}{P_0}\,\sigma\ ,$$

where σ is the wave number of the radiation, P is the pressure in the system, and $\Delta\mu_0 = \mu_0 - 1$, μ_0 being the index of refraction of the gas in the system at the reference conditions of T_0, P_0. Since this dispersion is not a function of the interferometer constants, it will be identical for both interferometers. On the other hand, the order of interference dispersion is given by

$$\frac{dn}{dP} = 2\mu t\,\frac{\Delta\mu_0}{P_0}\,\sigma = n\,\frac{\Delta\mu_0}{P_0}\ ,$$

where t is the interferometer spacing. Thus, to obtain a usable periodic pattern, the two periods from the individual interferometers must be commensurable. This condition is met by making the larger spacing an even multiple of the smaller spacing.

The advantage of the compound interferometer as employed here is the extension of the free spectral range. With this arrangement it is possible to study wide complex structures, such as are found in Zeeman work, at high resolution without the overlapping of patterns that is characteristic of the single interferometer.

Project OS-2 – Polonium Hyperfine Structure

K. L. Vander Sluis P. M. Griffin

A quartz electrodeless discharge tube, 3 in. in length, 9 mm in diameter, and containing 8 μg of Po^{208} and 3 μg of Po^{209} metal plus 5 mm of

UNCLASSIFIED
ORNL-LR-DWG 8070

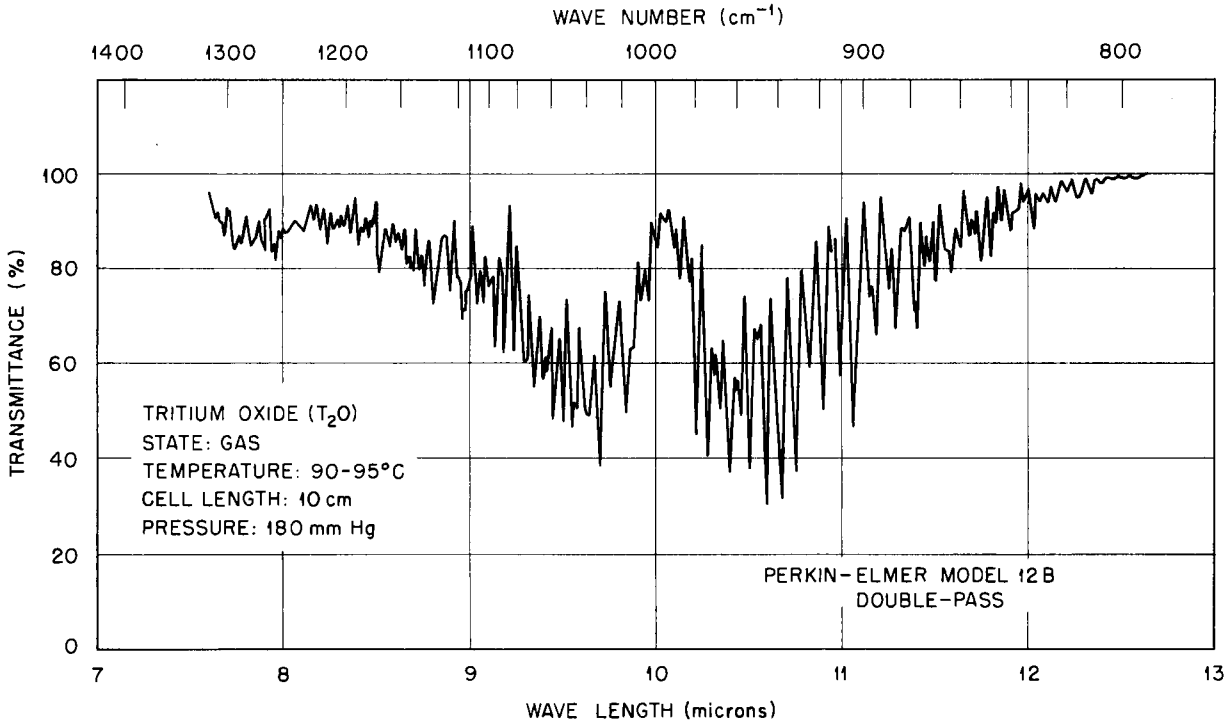

Fig. 4. Structure of the Bending Vibration (ν_2) in T_2O.

helium support gas, was fabricated by J. Richmond's group of the Mound Laboratory according to specifications.

The atomic spectra produced by this discharge tube, excited by a Raytheon Microtherm unit, model CMD-4, were observed interferometrically in the spectral region from 2200 to 9000 A. Interferograms, using spacers varying from 3 to 45 mm, were obtained for approximately 100 polonium lines at different densities on over 50 plates. Of these lines, about 36 showed isotope structure due to the presence of both Po^{209} and Po^{208}, and, of the 36 lines, about one-half showed nuclear hyperfine structure due to the Po^{209}. Inspection of the nuclear hyperfine patterns, which, in general, gave a two-component structure, showed that they definitely yield the value of $I = \frac{1}{2}$ for the nuclear-spin quantum number.

A program of reducing these data to precise wave lengths as well as to isotope shifts and hyperfine splittings is under way. In order to facilitate the reduction of these data, use will be made of the Oracle. A code is being prepared by the Mathematics Panel which will produce the least-squares fractional order of interference for each line when the comparator readings of the interference ring system are supplied.

Project OS-3 – Zeeman Spectroscopy

P. M. Griffin K. L. Vander Sluis

The bulk of the activity in the field of Zeeman spectroscopy in the past six months has fallen into four main categories: the development of the source and instrument, a search for suitable magnetic-field-strength standards, the development of new methods of data reduction and calculations, and the observation of the Zeeman spectra of polonium and tellurium.

The use of only moderately high magnetic-field strengths (~20,000 oersteds) for Zeeman spectroscopy is feasible only if high-resolution light sources and spectrographs are available. Electrodeless discharge tubes excited by high-frequency

radiation (~2500 megacycles/sec) are highly satisfactory sources provided that the microwave radiation can be directed to the tube located in the magnet gap. A Raytheon corner reflector, type C, output head has been redesigned to fit in the 0.940 × 9 in. magnet gap and has proved to be quite successful in supplying the necessary power to the discharge tube. Discharge tubes of Zn, Cd, Hg, Te, and Po have been made which will operate satisfactorily with the redesigned head and at 20,000 oersteds.

Both the internal and external optical systems of the Echelle-Littrow spectrograph have been changed so as to eliminate three reflections from aluminized mirrors which had caused a five- to tenfold decrease in the speed of the system in the ultraviolet region of the spectrum.

The accurate determination of Landé g factors from Zeeman patterns of spectrum lines is dependent upon an accurate measure of the magnetic-field strength in the region of the emitting atoms. A convenient method for measuring this localized field is to measure the Zeeman splitting of a line of an impurity element which involves levels whose g factors are known. A search is being made for lines of some element or isotope which can serve as a primary standard of magnetic-field strength for Zeeman spectroscopy. This work will involve the precise determination of g factors to five significant figures and their variation, if any, with field strength. Elements being investigated at present are zinc, cadmium, and Hg^{202}.

The Zeeman spectrum of polonium was investigated by using the sample of $Po^{208,209}$ used for the study of the hyperfine structure of Po^{209}. However, at the time that this work was done, no method of getting microwave power into the 1-in. gap had been developed, and so it was necessary to make the observations at only 8000 oersteds, which could be obtained with the 4-in. gap. With such small magnetic splittings, it was necessary to use a Fabry-Perot interferometer; but even with small plate separations, this instrument gave seriously overlapped patterns. A new Po^{210} source is to be prepared, and the work will be repeated at 20,000 oersteds with an Echelle-Littrow spectrograph.

Tellurium Zeeman spectra have been photographed in the region from 2200 to 7000 A at a field strength of 20,000 oersteds. The spectrograms obtained in the ultraviolet region were too weak for good measurements and are to be repeated, with the use of the improved optical system.

An Oracle routine for the calculation of wave lengths from Echellogram measurements is being worked out by the Mathematics Panel. The wave length λ of a line photographed with an Echelle instrument can be expressed as

$$\lambda = \frac{1}{m}\left\{A + B\,\frac{\Delta b}{a + b(l - l_0)} + C\,\frac{(\Delta b)^2}{[a + b(l - l_0)]^2}\right\},$$

where Δb is the displacement of the line from a fiducial mark in the direction of the Echelle dispersion, l is the displacement of the line in the direction of the prism dispersion, and m is the order of interference; A, B, C, a, and b are constants for a given plate and will be determined by Oracle computations from the m, l, and Δb of reference lines of known wave lengths on the plate. The Oracle will give, in addition to the laboratory wave length of each line, the vacuum wave length, the value of the wave number, and the displacement in Lorentz units. The routine is being developed primarily for the calculation of plutonium Zeeman spectra but can be used for any Echelle data. The routine will be tested with the more simple tellurium Zeeman measurements.

Project OS-4 – Thorium and Uranium Spectra

G. W. Charles

A critical compilation of all available data on the spectra of thorium and uranium has been initiated. Unpublished classified lines of Th(II) have been furnished by P. F. A. Klinkenberg of the Zeeman Laboratory in Amsterdam. Data from the MIT card file have been made available by G. R. Harrison of the Massachusetts Institute of Technology.

A master list of thorium lines has been compiled and is presently being checked against lines from established energy levels of the Th(III), Th(II), and Th(I) spectra. The list of classified Th(II) lines was obtained from IBM calculations. The goal of this work is, first, a compilation of all classified lines of thorium and then an extension of the knowledge of the spectra, especially that of Th(I). Additional data on the uranium spectra have been obtained from the MIT card file. There are approximately 2000 lines between 2500 and

1975 A which do not appear in the MIT wave length tables and which have not been classified.

Project OS-5 – Atomic Energy States of Plutonium

P. M. Griffin J. R. McNally, Jr.

The low level of Pu(II) (singly ionized plutonium) has been deduced from Zeeman effects as $^8F_{1/2}$ from $5f^77s$. Table 5 compares the preliminary g factors of four of the low levels. The coupling is intermediate, differing significantly from that of its analogue[7] Sm(II). The g sum for the $j = \frac{1}{2}$ levels agrees quite well (3.39 observed vs 3.33 theory). Thirty-seven energy levels of Pu(II) have been determined to date.

TABLE 5. LOW-ENERGY STATES IN Pu(II)

Configuration	Term	Level (cm^{-1})	g_{obs}	g_{LS}	g_{jj}
$5f^77s$	$^8F_{\frac{1}{2}}$	0.0	3.10	4.00	2.00
$5f^77s$	$^8F_{1\frac{1}{2}}$	2014.7	1.85	2.00	1.67
$5f^77s$	$^6F_{\frac{1}{2}}$	3236.0	0.29	−0.67	1.33
$5f^77s$	$^8F_{2\frac{1}{2}}$	4959.0	1.68	1.71	1.60

Project OS-6 – Back-Goudsmit Contributions to Hyperfine-Structure Analysis

J. R. McNally, Jr.

Green and Wulff[8] have pointed out that the magnetic analysis of hyperfine structure (Back-Goudsmit effect[9]) permits a more definite determination of the nuclear moment than the value interpreted from the interval separations of the fieldless hyperfine-structure pattern. In a strong magnetic field each Zeeman energy level is split into a number of $2I + 1$ sublevels,[10] which number is independent of the value of the electron quantum number J and has an energy contribution of $\Delta E = Am_Im_J$, where A is the hyperfine-coupling constant (IJ interaction) and m_I and m_J are the strong magnetic-field quantum numbers. The widest splittings occur in levels of maximum $m_J = \pm J$, and the over-all pattern width is $2AJI$. Resolved patterns give an unambiguous determination of I and can, because of intensity uniformity, be interpreted more accurately for the coupling constant A.

In view of recent developments in light sources for high-resolution Zeeman work at nominal magnetic-field strengths[11] and in pressure-scanning techniques applicable to the compound interferometer,[12] the possibility of applying the Back-Goudsmit effect more successfully has been considered. It has been determined that, in cases involving large J and I values, very significant improvement in intrinsic resolvability of hyperfine structures may be realized. The splitting between successive Back-Goudsmit components is JA, while the unperturbed hyperfine components have a least separation of $(|J - I| + 1)A$. Thus, for $J - 1 > |J - I|$, improved observations of hyperfine structures may be made by application of magnetic fields large enough to approximate the Back-Goudsmit situation. Incomplete Back-Goudsmit effects can be interpreted, for both intensities and splittings, by formulas of Goudsmit and Bacher.[13] Quadrupole corrections may be included, if necessary.[14] Reasonably complete Back-Goudsmit effects may be obtained when the magnetic splitting g_JL is several times greater than the hyperfine splitting $(2J + 1)IA$ or $(2I + 1)JA$, whichever is smaller.

Table 6 compares the magnetic splitting with the unperturbed hyperfine splitting. Requirements for source and instrumental resolution are inversely related to the tabulated figures; thus, intrinsic resolution is improved by a factor of 2.50 for $J = I = \frac{5}{2}$ by using the Back-Goudsmit approach. If $A = 0.02$ cm^{-1} for the close-lying unperturbed hyperfine components, the Back-Goudsmit splitting for fields g_JH of the order of 30,000 oersteds becomes $JA = 0.05$ cm^{-1}, and the required instrumental resolution for 5000-A light is reduced from about 1,000,000 to about 400,000.

[7] W. Albertson, *Astrophys. J.* 84, 26 (1936).

[8] J. B. Green and J. Wulff, *Phys. Rev.* 38, 2176 (1931).

[9] E. Back and S. Goudsmit, *Z. Physik* 47, 174 (1928).

[10] See, for example, N. Rosen, G. R. Harrison, and J. R. McNally, Jr., *Phys. Rev.* 60, 722 (1941).

[11] P. M. Griffin, *Stable Isotope Research and Production Semiann. Prog. Rep. Nov. 20, 1954*, ORNL-1829, p 9.

[12] K. L. Vander Sluis and W. F. Peed, *Stable Isotope Research and Production Semiann. Prog. Rep. Nov. 20, 1954*, ORNL-1829, p 7.

[13] S. Goudsmit and R. F. Bacher, *Z. Physik* 66, 13 (1930).

[14] See, for example, C. K. Jen, *Phys. Rev.* 76, 1494 (1949); E. Segre, *Z. Physik* 66, 827 (1930).

TABLE 6. THEORETICAL RATIO OF BACK-GOUDSMIT SPLITTING TO UNPERTURBED SPLITTING BETWEEN CLOSE HYPERFINE LEVELS

I Values	*J* Values							
	1/2	1	3/2	2	5/2	3	7/2	4
1/2	0.50	0.67	0.75	0.80	0.86	0.88	0.88	0.89
1	0.33	1.00	1.00	1.00	1.00	1.00	1.00	1.00
3/2	0.25	0.67	1.50	1.33	1.25	1.20	1.17	1.14
2	0.20	0.50	1.00	2.00	1.67	1.50	1.40	1.33
5/2	0.17	0.40	0.75	1.33	2.50	2.00	1.75	1.60
3	0.14	0.33	0.60	1.00	1.67	3.00	2.33	2.00
7/2	0.13	0.29	0.50	0.80	1.25	2.00	3.50	2.67
4	0.11	0.25	0.43	0.67	1.00	1.50	2.33	4.00

SPECTROCHEMISTRY

Project SC-1 – General Spectrochemical Analysis

M. R. Skidmore Z. Combs
J. A. Norris

A procedure for the determination of total beryllium in air sampler filters has been developed. This procedure is a variation of one in use in the Spectrographic Laboratory of the Y-12 Production Analysis Department combined with one published by Landis and Coons.[15]

The filter paper sample is partially charred in a clean porcelain crucible at 450°C until the weight of the residue is approximately 1 to 3 mg (filter paper diameter, about $\frac{3}{8}$ in.). To this residue is added graphite powder to a weight of 5 mg, and 3 mg of $SrCl_2$ is added and mixed thoroughly. The total sample is placed in a $\frac{3}{16}$-in. shallow-crater electrode and exposed on the Hilger Littrow spectrograph; a d-c arc at 10 amp is used until the strontium is completely burned off (determined by visual disappearance of flame color). The spectra are recorded on spectrum analysis (SA) No. 1 plates. The samples are compared visually with standards treated in like manner, and the range covered is 0.001 to 20 μg. Accuracy is estimated at 25% of the amount present.

Standards have been prepared for the determination of impurities in sodium uranate. A procedure has been developed which determines those elements listed below with the individual ranges given.

Elements	Range (%)
Fe, Al	0.01–10
Mg	0.01–5
B, Mo, As, Cu	0.01–2
Ca	0.1–2
Mn, Si	0.01–2
Cd, Pb, Cr, Co, Ni	0.01–1
Zn, P	0.02–1
Be	0.01–0.5

A total of 826 samples comprising 9473 elemental determinations has been run during this period.

Project SC-2 – Rare-Earth Mixtures

J. J. Mundzak J. A. Norris

To speed the analytical results necessary for separations-plant operations, the number of replicates called for in the regular procedure[16] has been changed from 4 to 1. This change effectively increases the volume of samples that can be run because it shortens the time of an individual analysis, but there is some sacrifice in precision. The results to date have been

[15] F. P. Landis and M. C. Coons, *Appl. Spectroscopy* 8, 71–74 (1954).

[16] J. J. Mundzak and J. A. Norris, *Stable Isotope Research and Production Semiann. Prog. Rep. Nov. 20, 1954*, ORNL-1829, p 12.

satisfactory to maintain adequate plant operations.

A total of 226 rare-earth mixtures, representing 1932 individual quantitative determinations, has been analyzed.

Project SC-3 – Photoelectric Spectrochemistry

J. A. Norris S. J. Ovenshine

The 21-ft Paschen spectrograph has been converted from the analysis of thorium in monazite to the analysis of stainless steels (see Project SC-4).

Data thus far available (Table 7) show precision (10% standard error) of the same order of magnitude as was obtained by the photographic method. Experiments are being carried out to determine the conditions necessary to improve this precision by a factor of 2 or 3.

TABLE 7. ANALYSIS OF TYPE 347 STAINLESS STEEL

Sample	Constituents (%)				
	Ni	Cr	Si	Cb	Fe
1	12.8	19.9	0.51	0.75	65.6
2	12.2	20.4	0.47	0.60	65.9
3	13.0	19.7	0.47	0.62	65.8
4	13.6	19.2	0.46	0.61	65.2

Project SC-4 – Modifications of Paschen Spectrograph and Source Equipment

W. F. Peed O. B. Rudolph
H. E. Walchli G. K. Werner

The modifications have been completed for making the 21-ft Paschen mount spectrograph more rugged mechanically and electrically so that it can be converted for rapid direct-reading analysis of stainless steel alloys. These modifications include two Unistrut channels to mount phototube holders securely, a standard type of phototube holder with mounting bracket, and a high-voltage and phototube-signal distribution system. The complete system was designed to permit expansion without further construction work in the grating room. It is anticipated, for instance, that the present design of the phototube holder and mounting can be used with no modification for almost all applications. Facilities for expansion to as many as 48 phototube circuits are built into the equipment.

Improved air flow and temperature control have been introduced in the grating room. Outside thermostats will control the supply of makeup heat to control the room temperature. An inside sensing element operating through a servo control (now a Brown Electronik recorder) will maintain the room temperature to ±0.1°F at the sensing point. Should better control be required, a continuously proportional control system can be added later. This system now replaces the Electron-O-Therm system, which gave a considerable amount of trouble through electronic failure.

The exposure timing circuit of the Baird direct reader has been revised to eliminate the dark-current compensation cycle. In the type of service in which it is now being used, line intensities and background are of such magnitude that dark current is a negligible quantity, percentage wise, and can be disregarded. By eliminating the dark-current compensation, reversing of the capacitors in which the photomultiplier current is stored is dispensed with. Now, instead of a switching operation by timer-controlled relays once each second during each exposure, only two switching operations are necessary: one to initiate the exposure and one to end it and start the read-out. This eliminates one cause of erroneous readings which has been encountered in the past – transients introduced into the capacitor circuits by the inductive kick from the relay coils. The capacity of the direct reader has been increased to eight element channels simultaneously operable.

The Specpower arc-current-supply electrical circuit has been altered to eliminate a source of recurrent trouble. As wired originally at the factory, the monitoring oscilloscope was connected in the high-voltage line going to the arc; consequently, the scope-circuit insulation frequently broke down to ground, causing numerous shutdowns and damage. The scope is now connected in the grounded side of the arc-current-supply line, and breakdowns at this point have been eliminated. This change also reduced materially the amount of high-frequency radiation from the supply which had been interfering with sensitive electronic instruments in other parts of the laboratory.

A major source of down time in the operation of the direct reader has been investigated and substantially eliminated. Erratic readings for

different element channels could be minimized by replacing the hermetically sealed, dpdt plug in type relays with ones having leakage resistances greater than 50,000 megohms. A relay testing device was developed (see Fig. 5), sensitive to 200,000 megohms, and numerous empirical tests were made during reconditioning of bad relays. The following items were found to contribute significantly to poor relay characteristics: entrapped moisture, spaghetti sleeving leakages, surface films, and phenolic insulator leakages. The reconditioned relays have been restored to service with leakage resistance greater than 190,000 megohms, and to date none has been removed from service.

Project SC-5 – Spectrography of Uranium Isotopes

M. R. Skidmore

A spectrographic method has been developed for the determination of U^{238} in 70 to 90% U^{235}, in which an Ebert spectrograph is used. Two milligrams of U_3O_8 and 8 mg of graphite were thoroughly mixed and arced in a ⅛-in. graphite electrode at 6-amp dc. Burning was complete in 55 sec. SA No. 2 plates and a 70-μ slit 3 mm in height were used with a 0.9 neutral density filter covering 1.5 mm of the slit to reduce the intensity of the U^{235} line to a value close to that of the U^{238}. Intensity ratios of the following line pairs have been used: 4244.37 (no filter)/4244.122 (0.9 density filter); 4244.37 (no filter)/4252.272 (no filter); and 4252.426 (no filter)/4244.122 (0.9 density filter).

A limit of error of approximately 9.5% of the U^{238} present was indicated from the preliminary data for a single determination, and a limit of error of about 4% for duplicate determinations. There was evidence of carry-over from standard to standard, and this was borne out by the limit of error being much better than would normally be expected for the duplicate determinations. An effort will be made to eliminate carry-over and thus improve the precision of single determinations. Figure 6 shows a series of 71 to 93% U^{235} standards.[17]

The 4244-A line of uranium has been resolved into its 234, 235, and 238 components by the Ebert spectrograph in the fourteenth order by

[17] Chemically synthesized standards supplied by J. C. Barton, Works Laboratory, K-25 Plant.

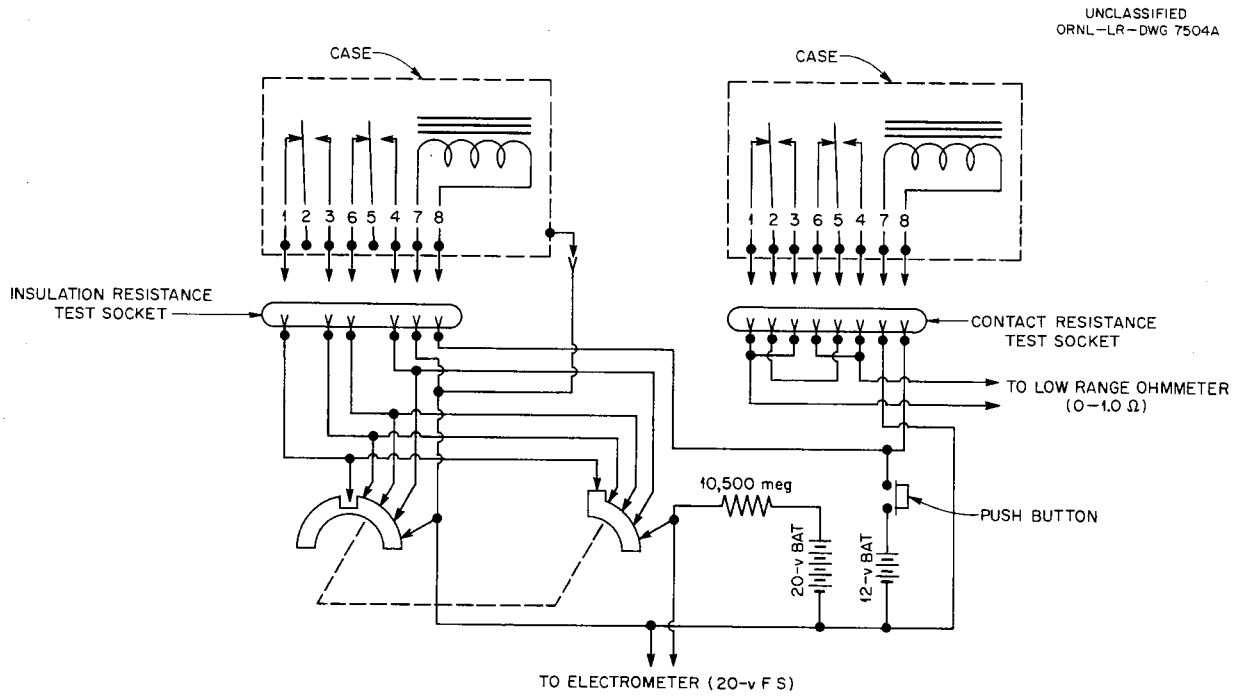

Fig. 5. Relay Test Circuit.

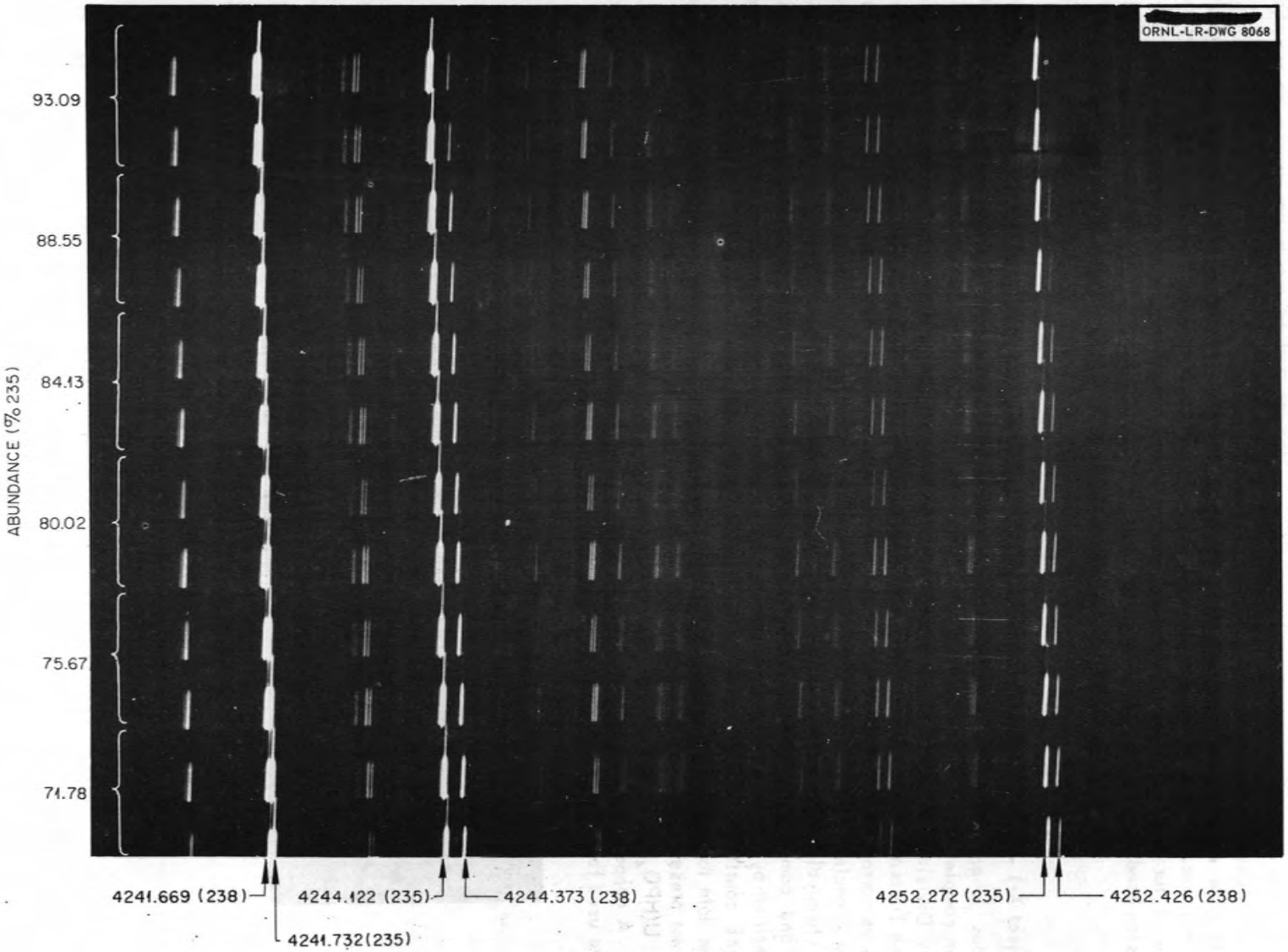

Fig. 6. Step-filtered Spectra in Duplicate of Uranium Isotope Standards Obtained with a 0.9-Density Filter, 70-μ Slit, and Order XIV of a 3.4-meter, Spectrograph in Ebert Mounting.

using a 30-μ slit and SA No. 1 plates. The resolution of the components is shown in a 13.5% U^{234}, 21.9% U^{235}, and 64.6% U^{238} mixture in Fig. 7. Dispersion of the spectra in the fourteenth order was 0.34 A/mm. The overlapping orders (13th, 15th, etc.) were eliminated by using a multilayer filter rotated slightly to peak the transmission band at 4245 A.

X RAYS

H. W. Dunn

Project X-1 – X-Ray Diffraction Analysis

Numerous chemical compound identifications have been completed for the ANP, HRP, Materials Chemistry Division, Stable Isotope Research and Production Division, and Y-12 laboratories. Such materials as corrosion products, uranium phosphate solubility specimens, compounds produced by various chemical reactions both inorganic and organic, and compounds formed in the calutrons were identified by x-ray diffraction analysis.

Work has continued on the tabulation of x-ray diffraction data for new compounds on which x-ray data are not presently available. X-ray diffraction data on $U(HPO_4)_2 \cdot H_3PO_4 \cdot H_2O$ are included in Table 8. A copper target x-ray tube and a nickel filter were used for recording all data.

PUBLICATIONS

Reports and papers in preparation or submitted for publication are as follows:

K. L. Vander Sluis and J. R. McNally, Jr., *Fabry-Perot Interferometer with Finite Apertures.*

J. R. McNally, Jr., and P. M. Griffin, *Source Requirements and Applications for High Resolution Spectroscopy.*

K. L. Vander Sluis and P. M. Griffin, *The Nuclear Spin of Po^{209}.*

H. W. Morgan and J. H. Goldstein, *The Microwave Spectrum and Molecular Structure of Vinyl Fluoride.*

H. W. Morgan, P. A. Staats, and J. H. Goldstein, *The Infrared Spectra of Formyl Fluoride and Deuterated Formyl Fluoride.*

E. L. Grove and J. A. Norris, "A Study of Matrix Effects in a Graphite Base Semi-Quantitative Procedure," submitted to *Applied Spectroscopy.*

O. C. Yonts and H. W. Morgan, "A Versatile Glass-to-Metal Vacuum Seal," submitted to *Review of Scientific Instruments.*

H. W. Dunn, *Analysis of the Rare Earths by X-Ray Fluorescence.*

O. B. Rudolph, *Relay Insulation Studies.*

O. B. Rudolph, *Improved Square Wave Generator for Microwave Stark Work.*

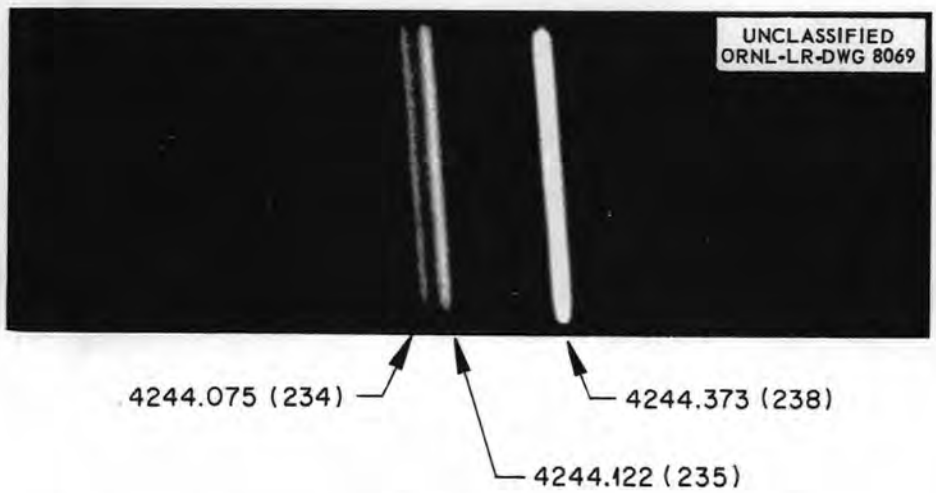

Fig. 7. Isotope Line Spectra of U^{234} (13.5%), U^{235} (21.9%), and U^{238} (64.6%) Obtained With a 30-μ Slit and Order XIV of JACO-Ebert Spectrograph.

TABLE 8. X-RAY DIFFRACTION DATA ON $U(HPO_4)_2 \cdot H_3PO_4 \cdot H_2O$

Intensity	Spacing, *d* (A)	Intensity	Spacing, *d* (A)
0		3	1.705
Edge	21.49	50	1.684
85	7.54	5	1.662
90	6.93	2	1.633
3	6.64	3	1.627
80	5.10	4	1.603
60	4.21	5	1.584
70	3.93	2	1.558
1	3.80	10	1.531
100	3.66	3	1.517
20	3.54	5	1.498
10	3.43	2	1.470
65	3.30	3	1.403
60	3.15	2	1.392
50	2.95	2	1.377
4	2.88	1	1.365
4	2.85	10	1.355
10	2.80	5	1.335
40	2.76	10	1.316
40	2.68	1	1.304
20	2.62	2	1.297
10	2.59	1	1.282
20	2.56	1	1.267
20	2.53	3	1.252
10	2.47	1	1.240
50	2.43	2	1.226
20	2.36	1	1.216
30	2.31	1	1.203
10	2.25	5	1.201
55	2.20	3	1.193
15	2.16	1	1.178
30	2.11	2	1.166
60	2.04	1	1.149
1	2.02	1	1.130
5	1.987	1	1.119
20	1.967	2	1.111
2	1.935	1	1.100
10	1.906	1	1.070
2	1.867	2	1.048
3	1.802	1	1.026
5	1.773	1	1.011
20	1.747	1	0.930
5	1.727	Edge	0.773

MASS SPECTROMETER LABORATORY

Russell Baldock, Department Head

INTRODUCTION

The Mass Spectrometer Laboratory is concerned with research and development of high-precision methods of analysis. Application of the isotope-dilution method of analysis has been extended to include quantitative measurements of radiation-produced nuclides. Small-sample, high-temperature techniques of ion generation have been used to detect and measure a variety of artifically produced nuclides. A program has been initiated to extend and improve the equipment for high-precision research.

Outstanding achievements during this period are as follows:

1. It has been established that the uranium content of the Gulf of Mexico is significantly higher than that of the Atlantic Ocean and that the uranium composition of both bodies of water is substantially higher than was previously believed to be true.
2. Isotope-dilution analysis has been used to study fissionable materials employed in certain MTR tests and to measure the Ru^{100} grown-in by MTR irradiation of Tc^{99}.
3. Analysis of MTR-irradiated ARE fuel samples shows no significant losses which cannot be accounted for by uranium burnup.
4. The isotopes of technetium produced by cyclotron bombardment of molybdenum have been positively identified by isotopic analysis as weighable amounts of masses 95, 97, and 98. The relative abundances which were found confirm the calculations which were based on molybdenum cross-section data and establish the existence of the long-lived Tc^{98} isotope.
5. Effusion cell studies with a mass spectrometer have established that the polymer Cu_2 exists in gaseous copper in the proportion of 1 part in 500. It has also been found that gaseous boron formed from either boron carbide or boron nitride is entirely monatomic.
6. A 6-in.-radius mass spectrometer has been completed and put in operation.
7. It has been found that pretreatment of glassware with boron trichloride greatly reduces the subsequent adsorption of boron trifluoride, thereby greatly reducing the time and errors involved in precision isotopic analysis of boron.

URANIUM IN SEA WATER

L. O. Gilpatrick E. Rona[1]

The analysis of sea water for its uranium content was begun in July 1954 and was reported in the previous semiannual report.[2] Since that time, several additional determinations have been made by the isotope-dilution method on waters from the Gulf of Mexico and the North Atlantic Ocean and new determinations made on waters from the North Pacific Ocean. All the values that have been obtained to date for waters from 0 to 30 ft deep are shown in Table 9.

Work is still in progress on this problem. Present efforts are directed toward eliminating the small blank values caused by impurities in the reagents; additional bodies of water are also undergoing tests.

ANALYSIS OF FISSIONABLE MATERIAL USED IN MTR TESTS

J. R. Sites L. O. Gilpatrick

A mass spectrometric study has been made on samples of fissionable materials used in fission counting chambers exposed in the MTR. The isotopic purity of the starting materials and the weights of metal on each plate were determined. The isotopic-dilution method was used to determine the weights on the nickel plates. The isotopic abundances and the molecular weights of both the sample and spiking materials were determined.

Fifteen plates coated with varying amounts of Th^{232}, U^{235}, U^{236}, U^{238}, or Np^{237} material were delivered for analysis. The weights on the neptunium plates cannot be determined by this method because no long-lived isotopes of other neptunium masses exist. The thorium plates were not analyzed because the spiking material (Th^{230}) has not been received. The analyzing of any plate that had much less than 50 μg of uranium on it was deferred until more sensitive ion-detector electronic equipment is available.

The plates were heated in HNO_3 until the entire surface of the nickel was removed. This solution

[1] Oak Ridge Institute of Nuclear Studies, joint project.

[2] L. O. Gilpatrick, C. F. Harrison, and E. Rona, *Stable Isotope Research and Production Semiann. Prog. Rep. Nov. 20, 1954*, ORNL-1829, p 20.

TABLE 9. URANIUM CONTENT OF SEA WATERS BY ISOTOPIC DILUTION

Body of Water Sampled	Latitude	Longitude	Uranium Content* (10^{-6} g/liter)	Average Uranium Content (10^{-6} g/liter)
Gulf of Mexico (sample 1)	26°51.8′ N	95°4.0′ W	3.38	
			3.47	
			3.45	
			3.51	3.45 ± 0.07
Gulf of Mexico (sample 2)	28°20.0′ N	88°20.8′ W	3.40	
			3.37	
			3.51	3.43 ± 0.14
Atlantic (Miami Beach)	25°49.0′ N	79°55.0′ W	3.45	3.45 ± –
North Atlantic (Woods Hole)	37°4.5′ N	66°54.5′ W	3.22	
			3.47	
			3.31	3.33 ± 0.23
North Atlantic (Beaufort)	34°21.0′ N	76°34.0′ W	3.19	
			3.25	
			3.09	
			3.22	
			3.21**	3.19 ± 0.07
North Pacific	29°41.0′ N	120°48.0′ W	2.99	
			3.27	
			3.23	3.16 ± 0.28
Blanks			0.10	
			0.14	
			0.15	0.13 ± 0.05

*All values ore corrected for blank contribution.

**Corrected for 3.62 μg per liter of added uranium.

contained plastic flakes from the protective coating, and, after it was taken to dryness several times with $HClO_4$, all visible material was in solution. After the material was taken up in HNO_3, the spike solutions were added. The resulting equilibrated solutions were extracted with diethyl ether to remove the bulk of the nickel salts. The uranium portions were taken to dryness with $HClO_4$ acid and then dissolved in HNO_3 again. Portions of these solutions were evaporated on tantalum filament ovens, which were put in the source of the mass spectrometer. The original solutions of U^{236} and U^{238} were also put through this chemical procedure, except for the spiking.

Duplicate loadings were run to gain reliability for the ratios used in determining the weights of material.

The usual UO_2^+ ion peaks were recorded, and the ratios were determined from 10 to 20 pairs of peaks for each analysis. Corrections for O^{18} were necessary only for the samples containing the U^{236} material.

Table 10 shows the isotopic abundances found for the starting and spiking materials as determined in this laboratory.

Table 11 shows the results of the spiking of the irradiated materials as calculated by use of the method reported previously.[3] The U^{235} and the U^{236} samples were spiked with standard normal uranium solution, and the U^{238} was spiked with very pure U^{235} standard solution. The weights reported are the average of duplicate runs, and the limit of error for the 95% confidence interval is

[3] L. O. Gilpatrick and J. R. Sites, *Stable Isotope Research and Production Semiann. Prog. Rep. May 20, 1954*, ORNL-1732, p 24.

TABLE 10. ISOTOPIC ABUNDANCES OF STARTING AND SPIKING MATERIALS

Material	Abundance (%)			
	U^{234}	U^{235}	U^{236}	U^{238}
Starting				
U^{235}	1.11	93.23		5.66
U^{236}		1.83	97.95	0.22
U^{238} (liquid)		0.085		99.915
U^{238} (oxide)		0.005		99.995
Spike				
U^{235}	0.03	99.86	0.04	0.07
U^{238}	0.005	0.7115		99.283

based on only two determinations.

There are eight more mass spectrometer determinations to be made to complete this study, and they depend on the availability of Th^{230} and more sensitive ion detection. The samples were received from J. B. Trice.

INVESTIGATION OF ARE FUELS

L. O. Gilpatrick J. R. Sites
J. K. Gladden[4]

The final adjusted calculations for the ARE fuel capsules reported in the previous semiannual report[5] have been completed during this period, and further work on this particular burnup and corrosion study has been abandoned in favor of dynamic corrosion tests with in-pile loops. A complete table of the final results and conclusions has been summarized in a memorandum.[6] Table 12, which has been condensed for this report, gives the corrected results found on Inconel fuel capsule Nos. 239 and 244 after irradiation in the MTR for periods of 240 and 777 hr, respectively.

The results show no experimentally significant losses which cannot be accounted for by uranium burnup in the neutron flux for capsule No. 239. However, capsule No. 244 shows that 4.5% of the original uranium has disappeared from the fuel body by some mechanism other than neutron fission.

URANIUM-BURNUP MEASUREMENTS

(Pratt & Whitney Fuel Elements)

L. O. Gilpatrick J. R. Sites
C. F. Harrison

Measurements of uranium burnup were performed during the previous period on small compresses[7] of type 347 stainless steel powder and UO_2. These packets were experimental units designed for irradiation in the MTR. They simulated portions of larger fuel elements of a type useful for power production. During this period, aliquots from four additional irradiated packets were measured for uranium burnup in the same manner as before.

The four aliquots were received as an aqua regia solution of type 347 stainless steel and product-level U^{235} plus fission products. The samples

[4]Consultant, Georgia Institute of Technology.

[5]L. O. Gilpatrick, J. R. Sites, and J. K. Gladden, *Stable Isotope Research and Production Semiann. Prog. Rep. Nov. 20, 1954*, ORNL-1829, p 21.

[6]Russell Baldock, *Data and Results of ARE Corrosion Capsules*, ORNL CF-55-2-79 (Feb. 15, 1955).

[7]L. O. Gilpatrick, J. R. Sites, and C. F. Harrison, *Stable Isotope Research and Production Semiann. Prog. Rep. Nov. 20, 1954*, ORNL-1829, p 22.

TABLE 11. WEIGHTS OF MATERIAL ON PLATES

Plate Designation	Nuclide	Weight (μg) (Estimated)	Weight (μg) (Mass Spectrometer)	Limit of Error (95%)
A	U^{235}	100	96.6	0.7
B	U^{235}	100	100.8	1.1
C	U^{235}	100	95.1	0.6
D	U^{235}	100	77.7	0.0
F	U^{236}	100	89.2	0.0
	U^{238} (liquid)	82.0	58.1	0.4

showed an activity of about $5\frac{1}{2}$ r (γ) at 18 in. with no shielding. The uranium was extracted from the fission products and stainless steel elements and analyzed for its isotopic composition. The uranium burnup was then calculated from these data as was done previously. Table 13 gives the results obtained.

TECHNETIUM FROM CYCLOTRON-BOMBARDED MOLYBDENUM

J. R. Sites

The isotopic abundances of technetium formed from cyclotron bombardment of natural molybdenum have been determined in the mass spectrometer.

TABLE 12. SUMMARY OF URANIUM BURNUP DETERMINATIONS

Capsule No.[a]	Per Cent of Uranium by Isotope Dilution	Per Cent of Uranium Burnup by Isotope Dilution	Per Cent of Uranium Burnup by Isotopic Ratio	Corrosion Loss[b] (%)
239 – drilling A	8.57	6.92		
239 – drilling A	8.70	5.51		
239 – drilling A			6.36	
239 – drilling B	8.71	5.42		
239 – drilling B	8.65	6.09		
239 – drilling B			6.05	
Average	8.66	5.99	6.20	−0.2
244 – drilling A	6.57	28.6		
244 – drilling A	6.44	30.1		
244 – drilling A			23.2	
244 – drilling B	6.67	27.6		
244 – drilling B	6.89	25.2		
244 – drilling B			23.5	
Average	6.64	27.9	23.4	+4.5
Initial	9.21[c]			

[a]The first number is the one used by G. W. Keilholtz's group.
[b]Corrosion loss equals per cent burnup by isotope dilution (col 3) minus per cent burnup by isotopic ratio (col 4).
[c]Chemical analysis.

TABLE 13. BURNUP RESULTS FOR PRATT & WHITNEY FUEL ELEMENTS

Pratt & Whitney No.	Sample No.	Atom %				Uranium Burnup (%)	Total Flux (neutron/cm^2)
		U^{234}	U^{235}	U^{236}	U^{238}		
Average Control	787-U 788-U	1.00	93.45	0	5.55	0	0
1-5	1327-U	0.88 ± 0.03	91.81 ± 0.20	1.23 ± 0.05	6.08 ± 0.19	8.56	2.71×10^{20}
1-8	1328-U	0.98 ± 0.03	90.62 ± 0.10	2.11 ± 0.01	6.29 ± 0.09	11.67	4.30×10^{20}
1-10	1329-U	1.09 ± 0.09	85.52 ± 0.18	5.95 ± 0.06	7.44 ± 0.14	25.35	6.44×10^{20}
1-11	1330-U	0.92 ± 0.02	89.28 ± 0.18	3.12 ± 0.05	6.81 ± 0.10	18.23	5.94×10^{20}

Natural-molybdenum metal was bombarded in the 86-in. cyclotron. The technetium formed by the main (p,n), $(p,2n)$ nuclear reaction was chemically separated from the molybdenum and was electroplated on a $\frac{1}{2} \times 1$ in. piece of 0.003-in. iridium foil. The $\frac{3}{16}$-in.-dia spot on the foil contained approximately 5 μg of technetium and read about 1 r/hr of soft beta at contact. Three $\frac{1}{16}$-in.-wide strips were cut from the foil, dividing the electroplated spot in thirds. The smaller of the hand-cut side strips was spot-welded to the tantalum legs of a standard mass spectrometer sample subassembly. It was estimated that there was 1 μg of technetium on this strip.

The subassembly was placed in the source of the mass spectrometer, and ions produced by both electron bombardment and thermal ionization were recorded. Small amounts of palladium and platinum impurities were observed, as well as the usual rhodium ions from the foil itself. The technetium ions appeared at a temperature consistent with previous runs on microgram amounts of metal. The prominent ions were those of masses 97, 98, and 99. With the use of electron-bombardment-produced ions, these masses were positively identified from a section of the mass vs the magnetic-field dispersion curve. The known ion peaks used were Ir^{++} at 95.5 and 96.5; Pt^{++} at 97, 97.5, and 98; and Rh^{+} at 103. With thermally produced ions, a check dispersion curve was made from the Sr^{+} ions at 86, 87, and 88, and the Rh^{+} at 103.

As is typical of these investigations of microgram amounts of technetium, only a few sets of ion peaks of low intensity were recorded before the iridium filament burned out. The following isotopic abundances were calculated.

Mass	Abundance (%)	Limit of Error (95%)
95	(~0.05)	
97	56.0	0.4
98	17.3	0.2
99	26.7	0.2

Figure 8 shows a set of ion peaks recorded just before the filament burned out, with the intensities of the ions increasing rapidly with time, and thus the true relative abundances are not indicated.

These mass spectrometer data give positive identification of the technetium isotopes formed in weighable quantities in the cyclotron bombardment of natural molybdenum. It is thought that this is the first time that the $Tc^{95,97,98}$ isotopes have been seen on a mass spectrometer. These data also prove the existence of a long-lived Tc^{98} isotope. From the Tc^{95} abundance, it can be estimated that 5 mμg of technetium can be seen by this method. The possibility that a long-lived Tc^{100} isotope exists seems to be very unlikely.

The iridium foil with the technetium electroplated on it was received from G. E. Boyd.

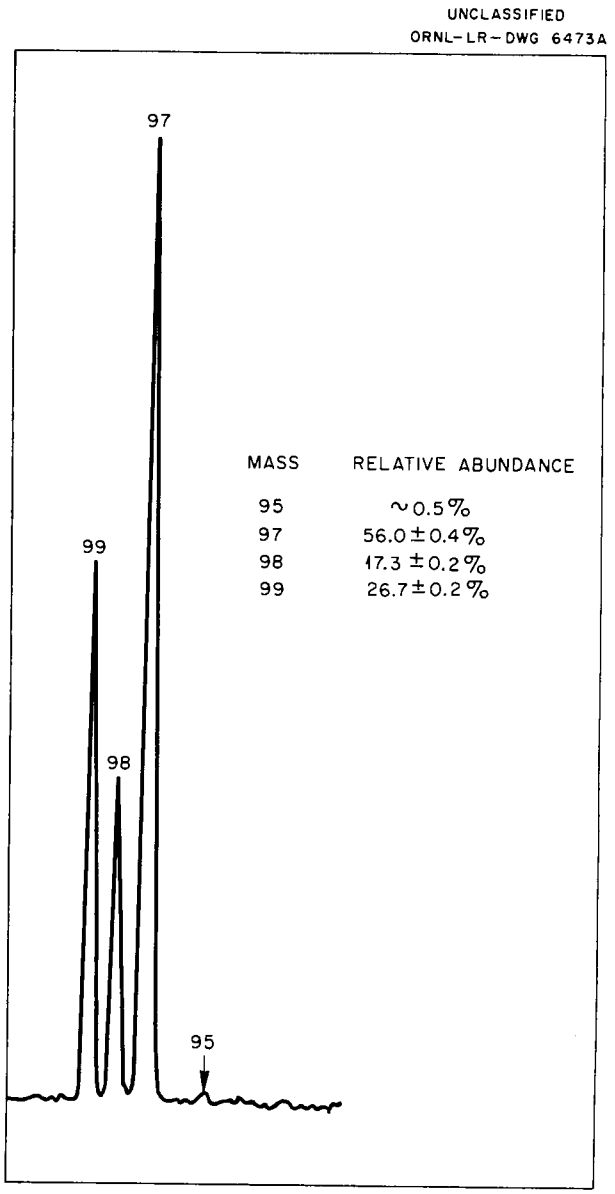

Fig. 8. Mass Analysis of Technetium Produced by Proton Irradiation of Molybdenum.

SEARCH FOR Tc^{98} IN NATURE

J. R. Sites L. O. Gilpatrick

Two additional ore concentrates have been studied in the mass spectrometer in the search for Tc^{98} in nature.[8]

Concentrates of a molybdenum ore and of an yttrium ore were spiked with known amounts of Tc^{99}, and the isotopic-dilution method was used. No ion peaks at mass 98 were seen; so only upper limits can be set. For these two samples, furnished by G. E. Boyd, the molybdenum concentrate contained less than 0.05 μg of Tc^{98}, and the yttrium concentrate contained less than 0.3 μg.

A check analysis made with 1.7 μg of the standard technetium solution indicated that the large amounts of extraneous material in the concentrates may have adversely affected the hydrogen reductions, or even to have masked or dispersed the desired metal. This analysis revealed that the Tc^{99} ion peaks were more than ten times as intense, appeared at lower temperatures, and persisted for a longer period of time, in comparison with data observed in other Tc^{99} determinations. Future studies will be deferred until the samples are delivered electroplated on iridium foil.

MTR-IRRADIATED Tc^{99}

J. R. Sites

A sample of $KTcO_4$ that was irradiated in the MTR for one year has been studied in the mass spectrometer to determine the amount of Ru^{100} that was grown-in from the Tc^{99}.

Two preliminary analyses were made. For the first, 1 mg of the raw sample was reduced in hydrogen to technetium and ruthenium metal on an iridium filament. With the use of thermally produced ions, data were taken on the mass 99 and 100 ion peaks. The ratio of 99 to 100 increased with temperature, indicating that these ions were coming from two distinct parents and that the vapor pressure of the technetium metal increased faster than that of ruthenium. This ion ratio does not indicate the true atom ratio because of differences between technetium and ruthenium in respect to their vapor pressures, crystalline structures, and ionization efficiencies. The second preliminary analysis was made with some of the ruthenium portion from a chemical separation on another portion of the irradiated material. The mass 100 ions were much more intense than the mass 99 atoms, indicating again that a different element was present.

In order to determine the amount of Ru^{100} grown in, the isotope-dilution technique was used. The Tc^{99} can be determined by counting or from the weight of the sample used. Natural ruthenium was used for the spike, and the ratio of mass 100 to mass 101 ion peaks was used to indicate the relative abundances of ruthenium in the sample and in the spike.

The previous chemical separation had indicated that the Ru^{100} was about 2% of the Tc^{99}. The weight of the $KTcO_4$ sample to which the spike was to be added was 50.8 mg. From this, approximately 25 mg of technetium and 0.5 mg of ruthenium were estimated to be present. A favorable manner of spiking is to double the mass 100 ion peak height. In this case, the only available spiking material is unseparated ruthenium, which has stable isotopes at masses 100 and 101 of relative abundances 12.56% and 17.10%, as determined by this laboratory. From these values, 0.5 mg of Ru^{100} has been found to be contained in 3.98 mg of natural ruthenium.

The 50.8 mg of $KTcO_4$ sample and the 4.00 mg of natural ruthenium sample were equilibrated in a silver crucible with about 250 mg of KOH and 50 mg of KNO_3. This mixture was slowly heated to 600°C, held for 5 min, and cooled in a desiccator. A few particles of the very deliquescent brownish-red residue were placed on an iridium filament and reduced in a hydrogen atmosphere.

The ratio of ion peaks 100 to 101 as measured in the mass spectrometer is 1.48 ± 0.02. If the mass 100 ion peak is the sum of Ru^{100} from the sample and of Ru^{100} from the spike and the mass 101 peak is from only the spike, then 0.51 mg of Ru^{100} was present in the sample. If the original sample weight is corrected for this amount of ruthenium metal, then the weight is 50.3 mg of $KTcO_4$. Of this weight, there was $50.3 \times 99/202 = 24.65$ mg of technetium present. Therefore, the Ru^{100} is $0.51/24.65 \times 100 = 2.0\%$ of the technetium originally present.

The samples were received from G. W. Parker of the Chemistry Division, and the fusion was done by W. C. Davis of this Division.

[8] J. R. Sites, L. O. Gilpatrick, and G. E. Boyd, *Stable Isotope Research and Production Semiann. Prog. Rep. Nov. 20, 1954*, ORNL-1829, p 23.

FISSION-PRODUCT SAMARIUM AND ZIRCONIUM

J. R. Sites

The isotopic abundances of a fission-product samarium sample that was separated from Chalk River fuel elements have been determined in the mass spectrometer, and the data are given below.

Mass	Abundance (%)	Limit of Error (95%)
147	36.65	0.19
148	1.98	0.04
149	1.92	0.06
150	32.66	0.17
151	4.79	0.08
152	18.79	0.18
154	3.23	0.08

The sample was analyzed as the oxide on a tantalum filament oven, and the data were taken on the thermally produced ions of the element. A large amount of Ba^+, BaF^+, Sm^+, and SmF^+ appeared first. The mass interference of BaF^+ on Sm^+ and the low intensity of the SmF^+ ions prevented taking good data. At higher temperatures the fluorides completely disappeared, leaving the pure mass spectrum of Sm^+.

The isotopic abundances of a fission-product zirconium sample that was separated from ORNL Graphite Reactor fuel elements have been determined, and are given below.

Mass	Abundance (%)	Limit of Error (95%)
90	3.34	0.07
91	17.91	0.13
92	18.47	0.11
93	19.79	0.08
94	20.27	0.14
96	20.37	0.19

An attempt to vaporize this very refractory material on a tantalum filament with the use of ions formed by electron bombardment would have succeeded if the hydrocarbon background had been baked away. In order to convert the oxide to a more volatile compound, a drop of HF was added to some of the ZrO_2 in a tantalum filament. This resulted in a very satisfactory run, with ZrF_3^+ ions predominating; there was no evidence of oxyfluorides.

These analyses were made at the request of G. W. Parker of the Chemistry Division.

VAPOR STATE OF INORGANIC SOLIDS

H. M. Rosenstock J. R. Walton

In an earlier study of the mass spectra of CuCl and CrBr vapors, it was found (by J. R. Sites) that electron impact produced some Cu_2^+ and Cu_3^+ ions. This led to speculation concerning the possible presence of polymers in gaseous copper metal. A sample of copper was heated on a tantalum filament in a mass spectrometer, and a search was made for polymers. A small quantity of Cu_2^+ having an intensity of about 1:500 relative to Cu^+ was detected. The following factors suggest that the Cu_2^+ ions are formed from Cu_2 and that they are not due to secondary reactions in the spectrometer:

1. The ion current vs electron voltage curve was typical of an ion produced by electron impact and not at all characteristic of an excitation process which could have then formed the ion by the collision reaction

$$Cu^* + Cu \rightarrow Cu_2^+ + e$$

2. The Cu_2^+ peak shapes showed no marked pressure broadening.
3. The variation of Cu_2^+ intensity with temperature was decidedly less than proportional to the square of the Cu^+ intensity.

The vapor state of two other substances was examined. Boron nitride was heated on a tantalum filament. The mass spectrometric study indicated that under high vacuum this substance decomposes into boron and nitrogen gas at temperatures of the order of 1500 to 2000°K. No evidence of molecular species was found. This indicates that gaseous boron is monatomic. Boron carbide when heated on tantalum apparently disproportionates. Very intense boron peaks were found, but no carbon was detected. No molecular species were found. It is possible that boron carbide may be reduced to boron with the formation of an extremely involatile tantalum carbide; however, there are no reliable thermodynamic data to support or refute this possibility. In an attempt to vaporize boron carbide from an iridium oven filament, the results were inconclusive. Again, only monatomic boron peaks were observed, but the accessible temperature was too low to permit definite conclusions to be drawn. Both investigations were carried out

with ionization by electron bombardment with both 20- and 70-v electrons, the lower energy being more favorable for the detection of polyatomic species.

NEW METHOD FOR ISOTOPIC ANALYSIS OF BORON

C. E. Melton L. O. Gilpatrick
Russell Baldock

Investigations to develop better methods for isotopic analysis of boron have been continued.[9,10] The primary objectives in these investigations were to develop a method for isotopically analyzing smaller samples of boron trifluoride, BF_3, and to reduce the time required to analyze a given sample. Isotopic analysis on small samples of BF_3 is difficult because BF_3, which is strongly adsorbed on the glass surfaces, exchanges isotopically very rapidly with a sample of BF_3 gas, resulting in an erroneous value for isotopic abundance. Good isotopic analyses of BF_3 are usually obtained by repeatedly saturating all surfaces with large quantities of the sample under consideration.[11] A new method, which utilizes boron trichloride (BCl_3) as a conditioning gas, has been developed.

A 250-cc soft glass sample reservoir which had been previously exposed to BF_3 was attached to the G-E analytical mass spectrometer (MS-B) as shown in Fig. 9.

The reservoir was evacuated to a pressure of 10^{-7} mm Hg, leaving only BF_3 strongly adsorbed on the surfaces. It was then filled with BCl_3 at a pressure of 20 μ and isolated from the expansion volume. Eight minutes after the introduction of BCl_3, the BCl^+ ion beam had declined to one-half its original value, while the BF_3 ion beam had increased sixfold, as shown in Fig. 10. These results indicate that the heat of adsorption for BCl_3 on glass is greater than that for BF_3; hence,

[9] These investigations are treated more fully in a report, tentatively entitled "Memory Effects in the Mass Analysis of Boron Trifluoride," to be submitted to *Anal. Chem.*

[10] C. E. Melton and Russell Baldock, *Stable Isotope Research and Production Semiann. Prog. Rep. Nov. 20, 1954*, ORNL-1829, p 25

[11] H. M. Rosenstock, J. R. Sites, and J. R. Walton, *Stable Isotope Research and Production Semiann. Prog. Rep. May 20, 1954*, ORNL-1732, p 22.

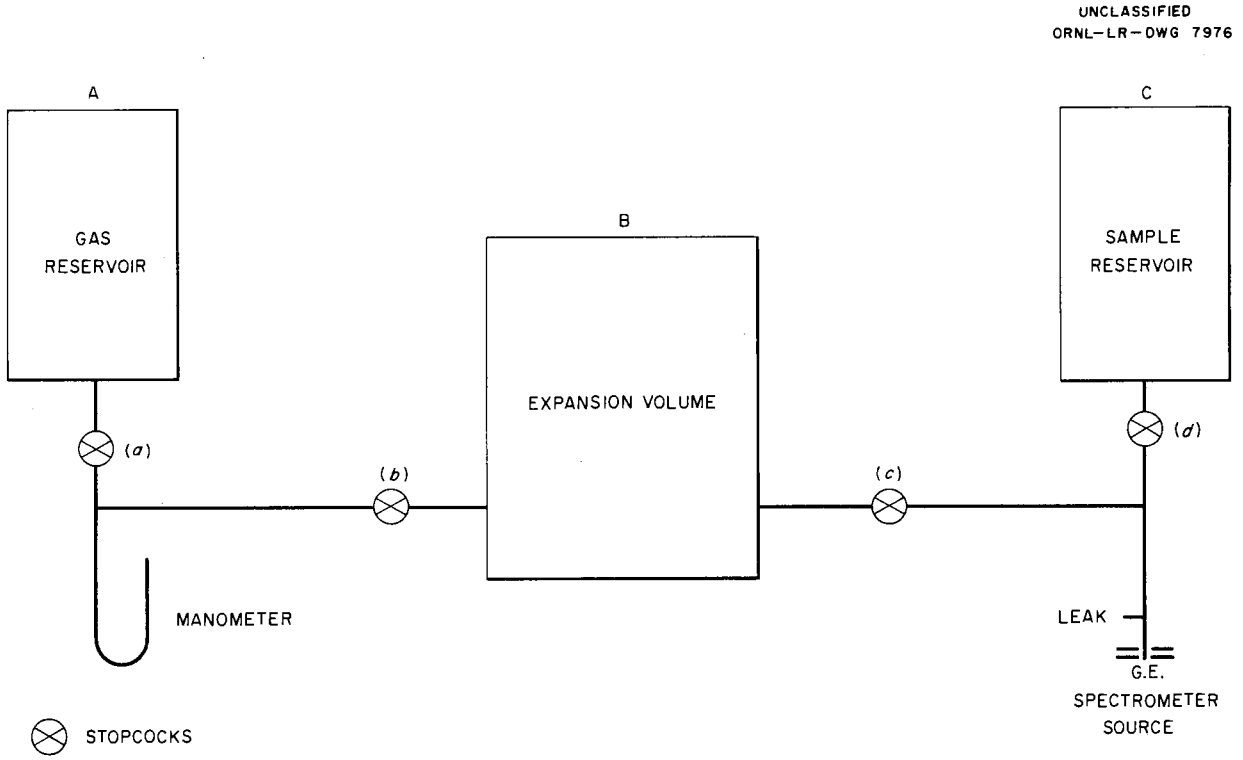

Fig. 9. Block Diagram of the Sample-Handling System.

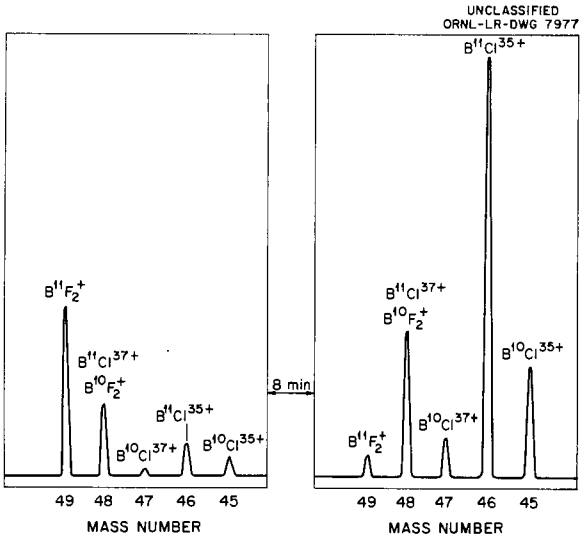

Fig. 10. Mass Spectrogram of BF_2 and BCl Ion Currents Showing Decay of BCl and Growth of BF_2.

the adsorbed BF_3 is replaced with BCl_3.

Two boron-free soft glass sample reservoirs were cleaned and evacuated to 10^{-7} mm Hg. They were then filled with BF_3 containing 11% B^{10} to a pressure of 3 cm Hg. After 12 hr, both reservoirs were evacuated to a pressure of 10^{-7} mm Hg, leaving only strongly adsorbed BF_3. Reservoir No. 1 was subsequently exposed to BCl_3 containing 20% B^{10}, while reservoir No. 2 remained at high vacuum. After the BCl_3 was evacuated from reservoir No. 1, both reservoirs were attached to the gas handling system, position C, Fig. 9. Boron trifluoride containing 96% B^{10} was used to study the rate of isotopic exchange with adsorbed BF_3 containing 11% B^{10}.

The $B^{10}F_2^+$ and $B^{11}F_2^+$ ion beams were monitored for 50 min in each case, giving the resultant experimental data shown in Table 14.

Similar results were obtained for glass initially exposed to BF_3 containing 96% B^{10}, with BF_3 containing 11% B^{10} used for following the exchange rate.

These results indicate that "memory effects" due to adsorption of BF_3 can be greatly reduced by treating the surfaces with BCl_3 prior to an isotopic analysis of BF_3.

TABLE 14. COMPARISON OF ISOTOPIC EXCHANGE FOR TREATED AND UNTREATED GLASS SURFACES

Time (min)	Reservoir No. 1* (% B^{10})	Reservoir No. 2** (% B^{10})
0	96	96
10	81	54
20	76	51
30	72	49
40	69	47
50	68	45

*Exposed to BF_3, then to BCl_3.
**Exposed to BF_3 only.

STABLE ISOTOPE ANALYSES

J. R. Walton

Eighty-eight calutron enriched isotope samples, received from the Stable Isotope Separation Research and Calutron Operations Department, were analyzed in mass spectrometer MS-C. These samples were composed of 20 different elements. The elements and compounds used and the ions measured during the analyses are shown in Table 15.

Rapid solid analyses techniques, previously described,[11] were successfully employed in the analyses of 40 of the 88 samples.

THE NEW 6-in. RADIUS, 60-deg-SECTOR MASS SPECTROMETER, MS-D

W. R. Rathkamp

During this period a fourth mass spectrometer, MS-D, was completed and put into operation. All the design features previously described[12] have been incorporated in the final construction with the exception of gold plating the interior. Since present operation of MS-D seems to be quite satisfactory, with no difficulties attributable to nonconducting oxide layers on the interior surfaces or to secondary emission, it was felt that little would be gained by gold plating at this time. This can be done at a later date if troubles curable by this technique develop in the future.

[12]W. R. Rathkamp, *Stable Isotope Research and Production Semiann. Prog. Rep. May 20, 1954*, ORNL-1732, p 28.

TABLE 15. ELEMENTS, COMPOUNDS, AND IONS MEASURED IN STABLE ISOTOPE ANALYSES

Atomic No.	Element	Compound	Oven	Ions Measured	
				Thermal	Electron-Produced
3	Lithium	Li_2SO_4	Ta	Li^+	
20	Calcium	CaI_2	Ta		CaI^+
24	Chromium	Cr_2O_3	Ta	Cr^+	
26	Iron	Fe_2O_3	Ta		Fe^+
28	Nickel	NiO	Ta		Ni^+
29	Copper	CuO	Ta		Cu^+
35	Bromine	KBr	Ta		Br^+
37	Rubidium	RbCl, $RbNO_3$	Ta	Rb^+	
38	Strontium	$SrCO_3$	Ta	Sr^+	
40	Zirconium	ZrO_2	Ta	ZrO^+	
46	Palladium	Pd	Ta		Pd^+
50	Tin	SnO_2	Ta		Sn^+
52	Tellurium	TeO_2	Ta		Te^+
57	Lanthanum	La_2O_3	Ta	LaO^+	
60	Neodymium	Nd_2O_3	Ta	NdO^+	
62	Samarium	Sm_2O_3	Ta	SmO^+	
72	Hafnium	HfO_2	Ta		HfO^+
73	Tantalum	Ta_2O_5	Ir		TaO_2^+
77	Iridium	Ir	Ta		Ir^+
78	Platinum	Pt	Ta		Pt^+

The receiver assembly of this spectrometer is arranged to allow rotation of the slits with respect to the plane of the source exit slit, which permits adjustment of the receiver to obtain the best possible fit between receiver slit and received beam. Figure 11 shows the mechanical construction of this receiver assembly. Rotation of the receiver has a marked effect on both peak height and resolution, and the receiver can easily be adjusted to the optimum position.

A permanent magnet, entirely enclosed within the vacuum system, is utilized in this machine to provide the ion-source magnetic field necessary to operate with electron-impact-produced ions. The soft-iron-ring magnetic yoke, carrying two small cylindrical Alnico magnets diametrically opposed on its inner surface, is mounted from the source mounting plate, making it possible to handle the source and magnet assembly as a unit. Figure 12 shows the details of source and magnet construction.

MS-D, like MS-A, the 8-in.-radius machine, and MS-C, the other 6-in.-radius solids spectrometer, is arranged to operate on either electron-impact-produced or thermal ions. An accelerating potential of 1800 v is used, giving good resolution to mass 255, but resolution can be obtained to mass 420 if the accelerating potential is lowered to 900 v.

In addition to the normal peaks of air, water, and hydrocarbons seen as background, peaks of electron-produced Ca^+, Sn^+, I^+, and HI^+ and thermal ions of Na^+, K^+, Rb^+, Ba^+, Cr^+, and UO^+ were observed from samples. A scan of Hg^+ from background is shown in Fig. 13 to demonstrate the resolution of this spectrometer.

Fig. 11. MS-D Receiver Assembly.

TWO-STAGE MASS SPECTROMETER PROGRAM

G. F. Wells J. R. Sites

A program was initiated during this period to improve the "abundance sensitivity"[13] in the Mass Spectrometer Department because of the number of problems in which it is necessary to detect one ion beam (mass M) adjacent to another (mass $M + 1$), where $M + 1/M$ is 10^4:1 or greater. A large portion of these problems arise in cross-section studies. The availability of a mass spectrometer of greater abundance sensitivity would materially reduce the experiment time from the order of years to months or possibly weeks. Other problems such as the analysis of very high purity separated stable isotopes and the search for the existence of new nuclides in nature also call for increased abundance sensitivity.

It was proposed that a two-stage 90-deg-sector, 12-in.-radius magnetic-focusing mass spectrometer patterned after the one developed by F. White and T. Collins of the Knolls Atomic Power Laboratory[14] be constructed. This instrument has a reported[15] abundance sensitivity of 10^7:1. Its successful operation depends on maintaining a very low vacuum (10^{-8} mm Hg) in a rather large system, matching the fields of two separate magnets, the use of high-temperature-surface ionization techniques in the ion source, and an electron multiplier and pulse counting circuitry for ion-beam detection.

This Laboratory is already very familiar with high-temperature-surface ionization techniques, low-vacuum techniques, and, in the Instrumentation and Controls Division, with pulse-counting techniques. In order that experience might be gained in the particular applications and improvements which are unique in the KAPL development, the program was divided into the three phases discussed below.

A. Renovation of the Existing 8-in.-Radius, 60-deg-Sector Mass Spectrometer (MS-A). – In renovating the 8-in. mass spectrometer tube, shown in Fig. 14, particular attention has been paid to new and more advanced techniques that should be tested here before designing them into the new two-stage, 12-in. mass spectrometer – mainly, vacuum techniques and ion-detector electronics. An operating pressure of 10^{-8} mm Hg is desired in the analyzer tube to minimize gas scattering effects on the ion peak shape. All welds are smooth 100% penetration Heliarc type. All valves in the pumping system have Teflon gaskets and long-travel bellows seals. The tube and the end chambers are made of Inconel and are connected to glass three-stage mercury diffusion pumps, each with a capacity of 80 liters/sec.

Inconel is preferred over other materials because previous experience has shown that no reduction in mass resolutions attributable to internal insulating oxide layers is encountered.

The source chamber is isolated from the analyzer tube for sample changing by a special tantalum-faced valve. The movable seals for this valve and for the receiver slit adjustments are

[13] Defined as $AS = (Wb/Ws)/F$, where Wb = beam width, Ws = slit width, and F = fraction of beam ions of mass $M + 1$ scattered into mass M beam.

[14] F. A. White, T. L. Collins, and J. C. Sheffield, *A Nier Type Mass Spectrometer of High Sensitivity*, KAPL-873 (Dec. 10, 1952).

[15] F. A. White and T. L. Collins, *Appl. Spectroscopy* 8, No. 4, 169 (1954).

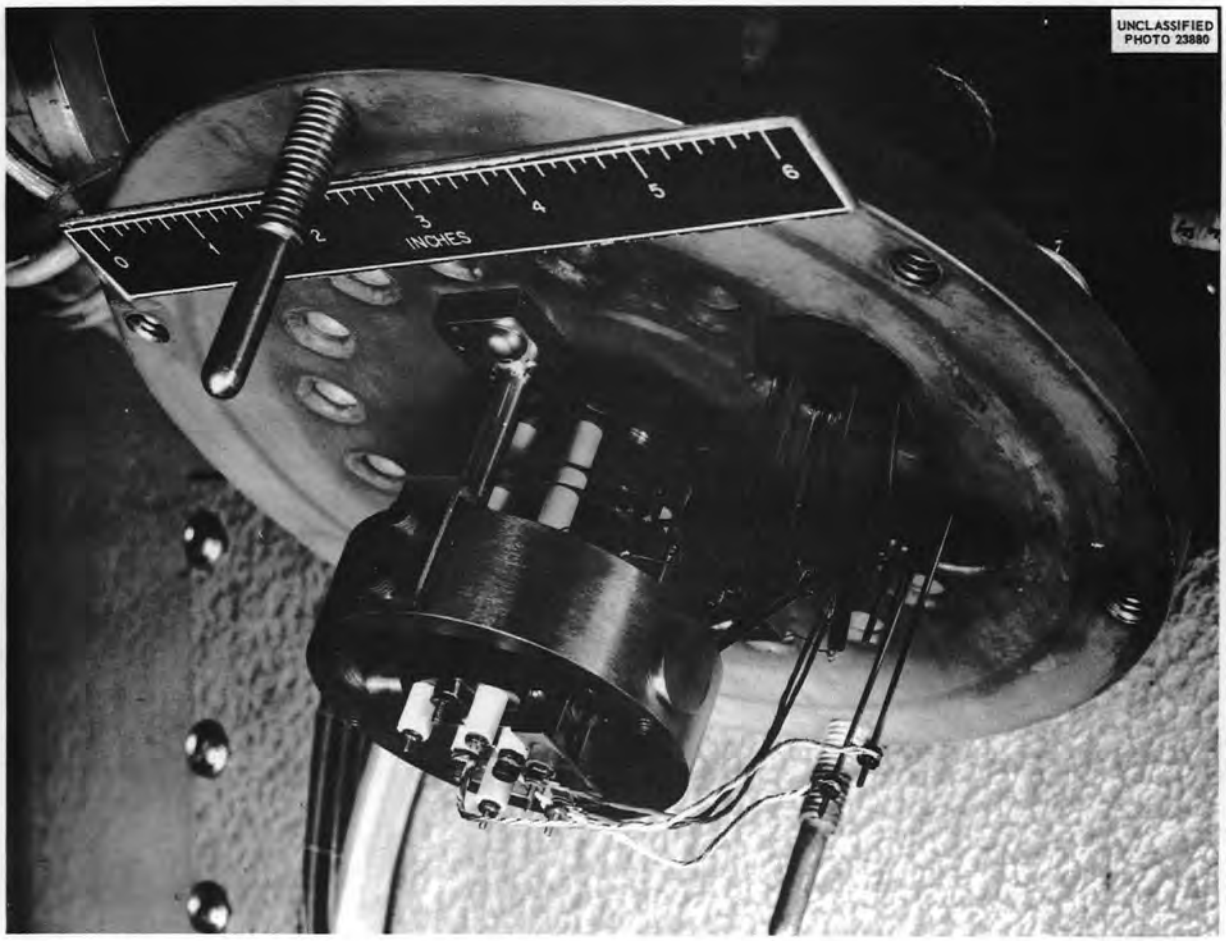

Fig. 12. MS-D Source Assembly.

modified stainless steel Beta Calutron vapor-valve bellows.

The gaskets for sealing the removable flanges are of 0.040-in. gold wire. The electrical leads enter the vacuum system through special Kovar-to-glass seals which are silver-soldered to projecting tubes. The entire receiver may be rotated, and receiver slit width may be varied to optimize the ion-beam reception. A 20-stage electron multiplier is employed to record data by either of the following methods:

1. a linear count-rate meter whose signal is fed to a strip-chart recorder,
2. a counter-timer circuit whose total counts for a preset time are printed out or whose elapsed time for a preset number of counts is printed out,
3. the electron multiplier acting as an amplifier to feed the input resistor of a vibrating-reed amplifier.

Engineering and procurement phases of this step are 95% complete; construction is 60% complete.

B. The Two-stage Mass Spectrometer (MS-F). – The Knolls Atomic Power Laboratory has made available the specifications on its instrument, which are being duplicated with the following exceptions:

1. The vacuum system is to be based on the all-metal tube with which this Laboratory is familiar, but the final design will not be completed until after an evaluation has been made of the MS-A vacuum system.

2. The receiver electronic equipment is to be modified to extend its range by use of a vibrating-reed electrometer and recorder for the larger beam

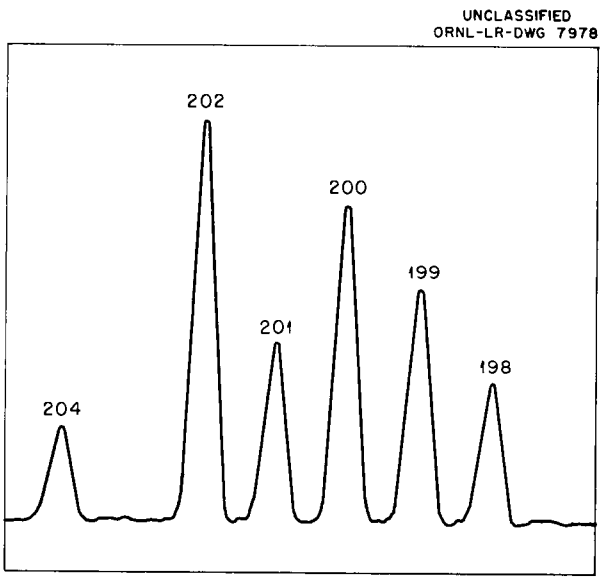

Fig. 13. Spectrum of Mercury Ions Taken on Mass Spectrometer MS-D.

strengths. Its final design is also pending an evaluation of the MS-A receiver system.

The main magnets are being fabricated in the Y-12 machine shop and Y-12 electrical shop. Site preparation and other electrical procurement are in progress. Engineering and procurement are 25% complete and construction is 10% complete.

C. The Micro-Chemistry Laboratory. – This special laboratory will have facilities for the preparation of microgram samples for either isotopic analysis or isotope-dilution analysis by both the two-stage mass spectrometer and the 8-in.-radius mass spectrometer. In general, its equipment is similar to that found in a quantitative analytical laboratory, with special emphasis to be placed on cleanliness. The room walls, ceiling, and floor are to be sealed, and dust-free air is to be supplied to place the entire room under slight positive pressure. Engineering and procurement are 60% complete; construction is 25% complete.

TITANIUM EVAPOR-ION PUMPS

W. R. Rathkamp

A new type of high-vacuum pump has recently been described by Davis and Divatia[16] and is based on the continuous gettering action of vaporized titanium metal in conjunction with ion pumping to drive the rare gases into the titanium-covered pump walls. Such a pump does not contribute any contamination to the vacuum system, as is always present in the form of mercury or oil when diffusion and mechanical pumps are used. Further, since there is no exhaust to the atmosphere from this new type of pump, any toxic or radioactive material in the vacuum system cannot escape.

Since elimination of background contamination is of prime importance in a mass spectrometer, an investigation of the properties of titanium evapor-ion pumps was undertaken. Following a technique developed by Neidigh,[17] a tantalum filament and a cylindrical grid with the necessary leads insulated from ground were constructed on a flange to fit the barrel of an old 4-in. diffusion pump.

This setup is essentially the same as that shown in Fig. 15. An ion gage was also brought through the flange. With this pump it was determined that pumping occurred under the following conditions:

Filament current, amp	70–90
Filament voltage, v	~2
Grid current, ma	60–120
Grid voltage, v	600–800

Pump barrel and one filament leg grounded

Grid voltage positive above ground

After evacuation to 5 μ with a Welch forepump, the pressure fell in a few minutes to 10^{-5} when the filament was heated sufficiently to evaporate titanium. This initial drop represents the gettering of oxygen and nitrogen, leaving the rare gases. Ion pumping of these rare gases, chiefly argon, is slow, usually requiring several hours to reach 10^{-7} mm Hg.

The consumption rate of titanium was ascertained, at a filament current of 70 amp, to be 1.2 mg/hr during a run of 203 hr.

After the operation of the original pump was observed, another one was designed and constructed to be compact and to provide improved wall cooling. This pump is shown in Fig. 15. The flange dimensions were chosen to permit the pump to be installed on mass spectrometer MS-D if further

[16] R. H. Davis and A. S. Divatia, *Rev. Sci. Instr.* 25, 1193 (1954); also R. G. Herb, R. H. Davis, A. S. Divatia, and D. Saxon, *Phys. Rev.* 89, 897 (1953).

[17] R. Neidigh, Electronuclear Research Division, ORNL, private communication.

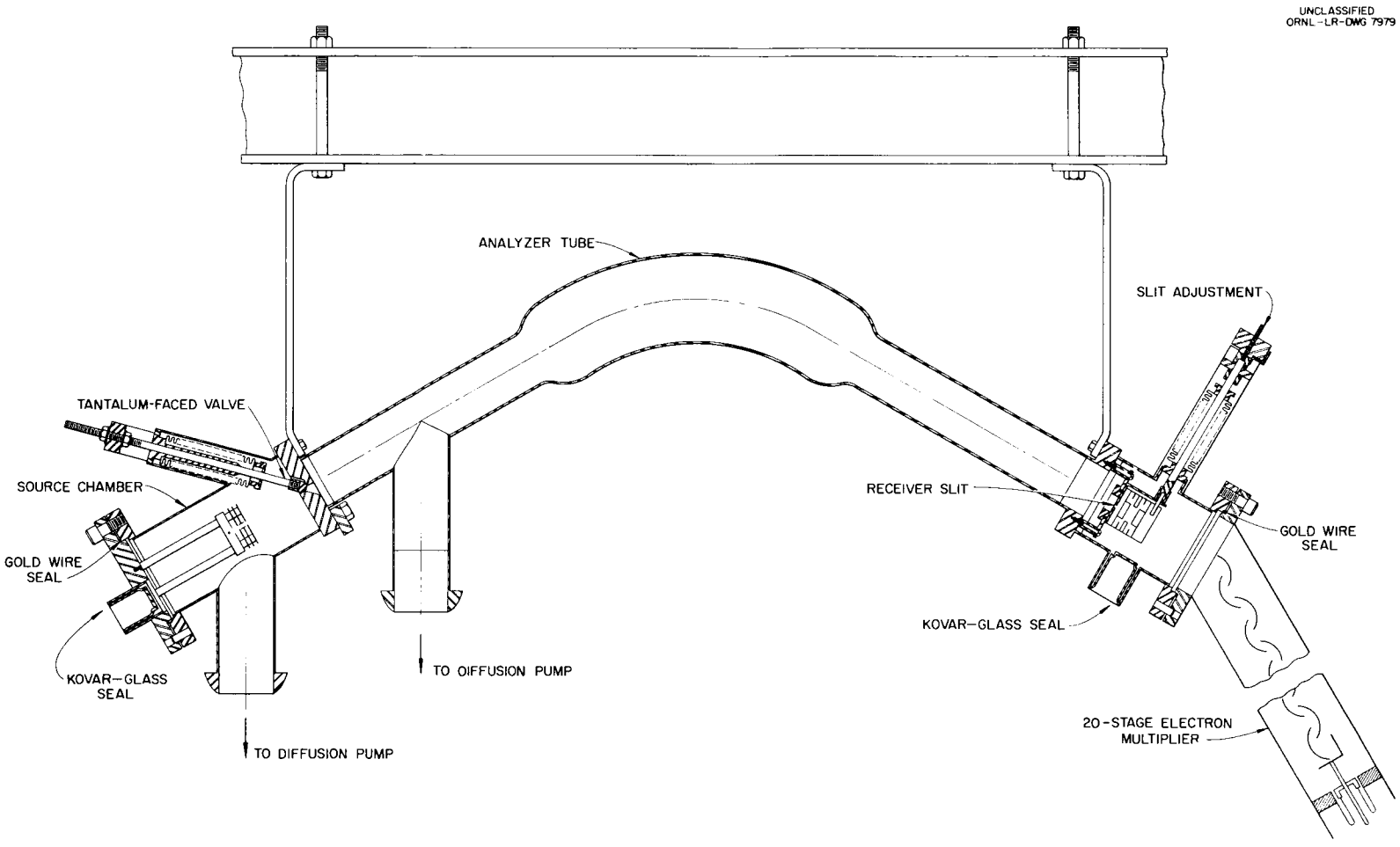

Fig. 14. Renovated 8-in. Mass Spectrometer Tube.

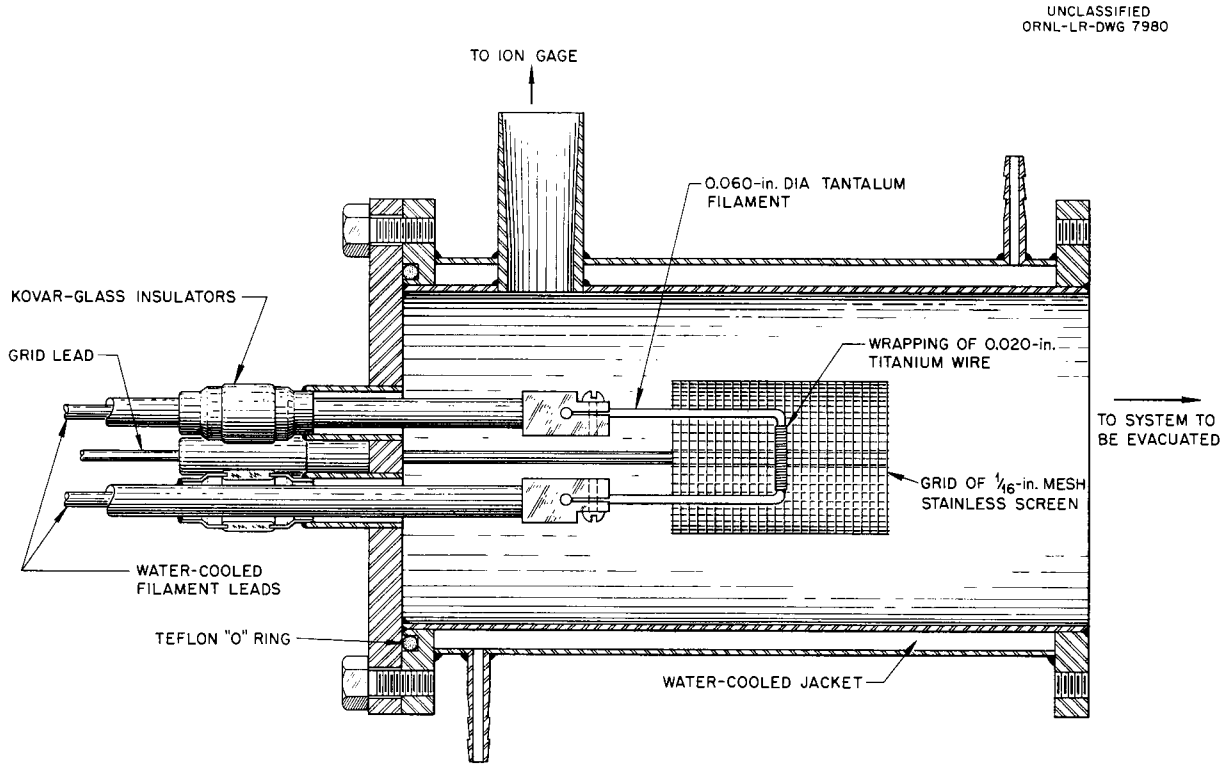

Fig. 15. Titanium Evapor-Ion Vacuum Pump.

investigation of its characteristics confirms the desirability of doing so.

POLYETHYLENE STOPCOCK GREASE

C. E. Melton Russell Baldock

A polyethylene stopcock grease (DX-1, Bakelite Company) has been investigated for vacuum properties and resistance to halogenated compounds. The stopcocks of the gas-handling system of the G-E analytical mass spectrometer (MS-B) were lubricated with the grease. Hydrocarbon compounds attributed to the grease were observed initially in the mass spectrometer; however, the intensity of these compounds declined and disappeared entirely after 12 hr. Vacuums as high as 4×10^{-8} were obtained. The grease has all the desirable properties of Apiezon N and is much more resistant to halogenated compounds.

EFFUSION CELL STUDIES WITH A MASS SPECTROMETER

H. M. Rosenstock

An effusion cell suitable for use in mass spectrometric studies of solid materials has been designed and constructed.

Some preliminary experiments have been performed with zinc metal as the charge material, and satisfactory ion currents were obtained. The vaporization of zinc was carried on for more than 20 hr without causing high-voltage breakdown across the insulation on the ion source.

STABLE ISOTOPE SEPARATION RESEARCH AND CALUTRON OPERATIONS

L. O. Love

INTRODUCTION

Activities of the Stable Isotope Separations program have continued to be influenced strongly by two types of separations problems: attainment of large, multigram samples and attainment of samples involving high isotopic enrichment of natural material (tantalum and nitrogen), or enrichment from "second-pass" operations with the use of a previously separated isotope as a charge material (chromium). Attempts to meet the first problem have been through the use of recently developed high-production equipment[1] and extension (on March 14, 1955) of the work week from five days to a continuous seven-day schedule. The second problem requires adaptation of special equipment and operating techniques for each particular isotopic collection. Replenishment of the inventory has been allocated only a small percentage of total operating time (chromium and tellurium separations).

ISOTOPE RESEARCH AND COLLECTION

Six elements (Ca, Cr, N, Rb, Ta, Te) were processed during the past six-month period. Those responsible for design, fabrication, and evaluation of calutron units were L. O. Love, W. A. Bell, C. V. Ketron, W. K. Prater, and G. M. Banic. Operations were performed under the direction of R. L. Caldwell, W. W. Davis, G. J. Fisher, and K. A. Spainhour.

Calcium, Series GV-XAX

Collection of the isotopes of calcium (Ca^{40}, Ca^{42}, Ca^{43}, Ca^{44}, Ca^{46}, Ca^{48}) for biological and medical uses continued until April 6, 1955. Emphasis was placed on the collection of Ca^{46} (natural abundance, 0.0033%) and of Ca^{48} (abundance, 0.19%). Even though ion sources of the two-arc, high-production type were used primarily, the time involved in producing the needed quantities of isotopes was extensive. The modified Alpha-2 ion source used for 60% of the collection is described in the preceding semiannual report.[2] Average production rate achieved with this ion source increased from 125 to 145 ma. At this output, it became evident that a plateau had been reached. Operations then were shifted from this two-arc source and 48-in. collection radius to use of a single arc and 20-in. collection radius and to use of a high-temperature modification of the grid-type ion source also having a 20-in. collection radius. These two sources were operated in a homogeneous magnetic field without the use of magnetic shimming.

Characteristics of operation with the modified Alpha-2, two-arc source were discussed previously.[2] Briefly, they included severe sparking, heavy electron drains, inadequacy of temperature control (later improved), and breakage of negative accelerating-electrode bushings (later eliminated by modification of drain system). The single-arc source operated quite similarly; the grid-type source, however, presented other problems. Charge material deposited on the grid surfaces facing the arc, thus thickening the grids and changing their configuration. Ion beams then eroded certain grids, eventually causing run failure. This condensation of material on the grids was due, in major part, to inadequacy of the arc-chamber heating system. Relocation of the position of the graphite heater relative to the arc did much to remove deposits from the grids. In its present state of development, this unit is capable of producing high calcium-ion output, but the resulting ion beams are poorly focused; and the focus becomes poorer as the output is increased. By designing shims to accommodate ion beams on a 20-in. radius, the focus could be greatly improved. Consideration is being given to the design of shims which will permit the reception of magnetically focused beams on 20- and 30-in. radii, as well as on the 48-in. radius which is normal at present.

Parameters of operation of these three types of "high-output" ion sources are compared in Table 16 with outputs achieved with Beta ion sources operating in Beta and in Alpha tanks.

A total of 8665 separator-hours was used in this collection. Production was maintained during 5526 hr, or 64% of the time, at an average rate of

[1] C. E. Normand, *Stable Isotope Research and Production Semiann. Prog. Rep. Nov. 20, 1954*, ORNL-1829, p 29 ff.

[2] *Ibid.*, p 31.

TABLE 16. CALCIUM PRODUCTION ACHIEVED WITH VARIOUS TYPES OF ION SOURCES

Source	Tank	Collection Radius (in.)	Ion Reception (hr)	Average Output During Reception (ma)	Peak Output (ma)	Average Run Time (hr)
Beta	Beta	24	2121	104.2	184.5	28.3
Beta	Alpha	48	1255	29.6	84.0	40.5
Modified Alpha-2 (two arc)	Alpha	48	3377	144.8	323.0	96.5
Modified Alpha-2 (one arc)	Alpha	20	787	128.9	221.0	131.0
Modified grid	Alpha	20	1362	180.9	358.0	75.7

151.4 ma. The following estimated amounts, in grams, of calcium isotopes were collected:

Ca^{40}	1237.86
Ca^{42}	2.29
Ca^{43}	1.35
Ca^{44}	5.98
Ca^{46}	0.49
Ca^{48}	3.45
Total	1251.42

Rubidium, Series GX-XBX

Separation of the isotopes of rubidium (Rb^{85}, Rb^{87}) was started on November 8, 1954, and continued until December 27, 1954. Ions were produced from RbI (or RbCl) charge material vaporized in a standard Beta-type ion source to which additional heat shielding had been added. Operating temperature was in the 700 to 750°C range. Ion beams were collected in water-cooled receiving pockets insulated from ground to facilitate monitoring.

Operation was accompanied by rather severe sparking flurries similar to those encountered in potassium separation. Sparking was less severe with RbCl than with RbI as charge material; however, higher peak outputs were attained from the iodide charge.

Receiving pockets were a constant source of trouble. Spacing between isotopic beams (0.59 in.) did not permit adequate water cooling to be applied to each of the conventional receiver pockets; consequently, pocket walls were eroded through by the rubidium ion beams in a matter of hours. This problem was solved by designing and fabricating a dual-type receiver containing a series of cooling-water passages common to the two pockets. Loss of rubidium from the earlier type of receiving pockets was quite high, amounting to some 85% in a collection performed in 1950. Marked improvement in retention is anticipated in the present collection series as a result of the additional water cooling used and of the use of $CuCl_2$ in the receiver pockets. Rubidium ions impinging on the $CuCl_2$ formed RbCl having much more favorable vapor pressure characteristics than does rubidium metal, which melts at 38.5°C.

A total of 1543 separator-hours was used in this collection. Production was maintained during 1222 hr at an average rate of 22.3 ma; peak production was 102 ma.

The following estimated amounts, in grams, of rubidium isotopes were collected:

Rb^{85}	63.88
Rb^{87}	23.09
Total	86.97

Tantalum, Series GY-XBX

Processing of tantalum isotopes (Ta^{180}, Ta^{181}) was started on December 27, 1954, and continued until March 1, 1955. During this time, sufficient material was collected in the 180 mass position to verify the existence of Ta^{180}, recently reported as 0.012% in natural abundance, and to enhance this material to 0.2% Ta^{180}.

This separation presented difficult collection problems. Here, an isotope of low mass (180 in comparison to 181) and low natural abundance (0.012%) was to be as highly enhanced as

possible by using Beta separation equipment. Isotope beams were then only 0.140 in. apart from center to center. Assuming that ion beams can be focused through defining slits 0.080-in. wide, then pocket separation, including pocket wall thickness, is only 0.060 in. – an obvious impossibility from a practical operating standpoint. As a compromise, the receiver initially used was a modification of the standard Beta uranium receiver in which the graphite separator between beams was reduced in thickness to 0.080 in. and the Ta^{181} and Ta^{180} defining slots were made 0.125 and 0.080 in. wide, respectively.

Since the separator formed the bottom of the 181 pocket and also the top of the 180 pocket, it was impossible to accurately evaluate beam focus during operation, the negative-angle 181 beams being able to strike the outside of the 180 collector. To overcome this difficulty, another receiver was fabricated, making the 181 collector a graphite box-like structure in which the Ta^{181} beam was allowed to impinge. Thus, the Ta^{180} beam was isolated electrically from the Ta^{181}, but it was now possible for the positive-angle portion of the 180 beam to strike the Ta^{181} collector from the bottom. Such a condition, although not desirable, was not intolerable. Defining slots through which the tantalum beams were allowed to pass are shown in Fig. 16.

The problem of beam focus was approached by stopping down the 90-deg baffle opening to $3\frac{1}{4}$ in., corresponding to a beam divergence of from +6 to –2 deg. Output was also reduced from maximum attainable, and nitrogen was fed into the arc to produce a stabilizing effect. Even with these precautions, the ion current monitored in the Ta^{180} pocket when the uranium-type receiver was used was 1206 times that theoretically possible from

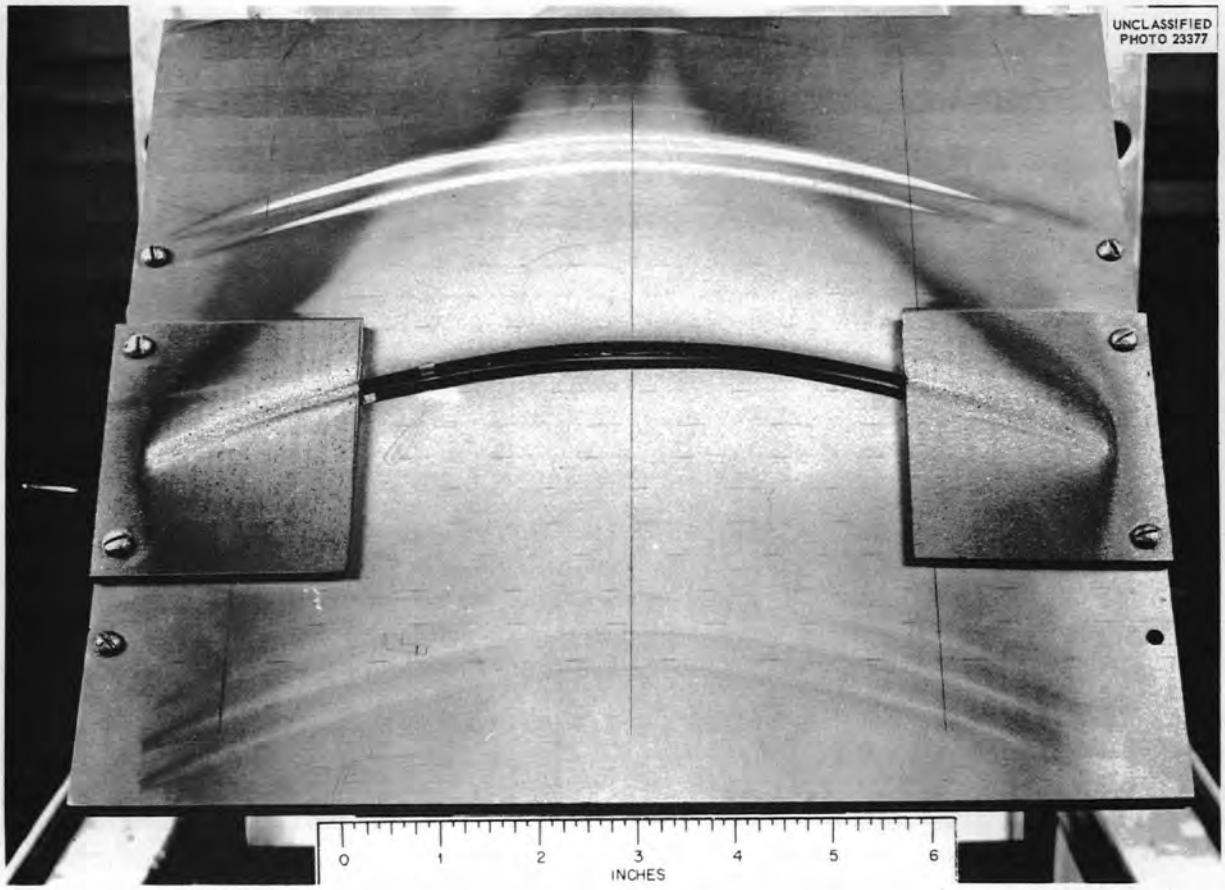

Fig. 16. Beam Defining Slots in Tantalum Receiver.

0.012% abundance, and 772 times theoretical when the modified type of receiver was used.

Ions were produced in a low-temperature Beta unit vaporizing $TaCl_5$ charge. Operating temperature was in the 50 to 100°C range. Little, if any, high-voltage sparking was encountered during operation, but deposits of tantalum formed at each end of the electron collimating slot were troublesome in that they rather effectively blocked electrons from entering the arc chamber and also shorted out the arc filament. Over 50% of the runs started were terminated because of either filament failure or filament shorts.

A total of 2142 separator-hours was devoted to this collection. Production was maintained during 1611 hr at an average rate of 15.1 ma; peak production was 46.7 ma.

The following estimated amounts, in grams, of tantalum isotopes were collected:

Ta^{180}	0.02
Ta^{181}	164.08
Total	164.10

Assay results of two samples collected at the 180 position are given in Table 17.

TABLE 17. ASSAY RESULTS OF TANTALUM SAMPLES COLLECTED AT 180 POSITION

Sample No.	Isotope	Abundance (%)	Limit of Error ($\overline{X}$, 0.05)
864(a)	180	0.21	0.01
	181	99.79	0.01
864(c)	180	0.25	0.01
	181	99.75	0.01

Chromium, Series GZ-XBX

The collection of chromium isotopes (Cr^{50}, Cr^{52}, Cr^{53}, Cr^{54}) was started on March 1 as a companion series to a high-purity, "second-pass" chromium collection to be performed in one tank only. Thus, this series was used to establish the type of equipment and operating techniques to be used in the high-purity collection and also to provide for maximum utilization of tank time during the special separation. This normal series of chromium separations was completed on March 30.

Collection was performed with a high-temperature Beta ion source equipped with standard 0-deg accelerating electrodes and a $^3/_{16}$-in. ion-exit slit. The operating temperature required to produce adequate vaporization of $CrCl_3$ charge was in the 550 to 650°C range. In order for the best possible beam focus to be attained, it was necessary to operate at approximately 75% of maximum attainable output, which required that a nitrogen-supported arc be used and that the angular spread of received beams be limited by suitable baffles placed in the 90-deg position. Ions were collected in graphite receiving pockets. Open filaments and filament-to-source shorts caused 60% of all run terminations.

A total of 840 separator-hours was used in this collection series. Production was maintained for 621 hr, during which period the output averaged 47.6 ma.

The following estimated amounts, in grams, of chromium isotopes were collected:

Cr^{50}	1.90
Cr^{52}	49.48
Cr^{53}	4.97
Cr^{54}	1.11
Total	57.46

Chromium, Series HA-XBX

This collection of chromium isotopes was performed to produce a high-purity (99.99+%) sample of Cr^{52} with a Cr^{53} content of 1 part in 10^5, and was a "second-pass" type of collection, with $CrCl_3$ enriched in Cr^{52} content to 99.53% used as the charge material. Information from the GZ-XBX series of chromium was used in establishing the choice of equipment, amount of charge to place in a source, optimum baffle positions, etc. The collection was made during the period March 15 through April 1.

Ions were produced in a high-temperature Beta source equipped with standard 0-deg accelerating electrodes and a $^3/_{16}$-in. 0-deg ion-exit slit. Angular spread of the ion beams reaching the receiver was limited to +6 through −2 deg. Operating temperature ranged from 550 to 650°C, and at this temperature nitrogen-support gas was required to produce stable arc conditions. Output

was limited to approximately 75% of that which could be attained.

Chromium-52 ions were received in a purified graphite collector pocket placed behind a $\frac{1}{8}$-in.-wide beam defining slot. Collectors for other chromium isotopes (Cr^{50}, 0.03%; Cr^{53}, 0.37%; Cr^{54}, 0.07% abundant in this charge) were water-cooled copper pockets which were to act as cold-traps for these ions. The beam defining slot width for these isotopes was increased to $\frac{3}{16}$ in.

To further reduce the possibility of Cr^{52} contamination from neutral or un-ionized chromium, the Cr^{52} collector pocket was enclosed in a box-like structure completely encasing it, the only opening being the $\frac{1}{8}$-in. beam defining slot. At the source, all possibilities of charge dilution were minimized; for example, the stainless steel charge bottle was replaced by a graphite bottle, and stainless steel heat shielding was either discarded or replaced by graphite. Ion sources were equipped with new parts, and the quantity of charge installed (100 g) was chosen with the aim that the unit would operate to charge exhaustion and would not be rerun.

Operation was quite satisfactory. At the adopted output (limited to 25 ma to prevent overheating of the collector pocket), the pocket was kept at dull-red heat, and rejection of material was not excessive. An estimated 14 g of Cr^{52} was collected. Scans of the beams taken during average operation indicated that a product purity of 99.997% Cr^{52} could be expected. Two of the three samples collected have been assayed; the results are given in Table 18.

TABLE 18. ASSAY RESULTS OF Cr^{52} SAMPLES COLLECTED

Sample No.	Isotope	Abundance (%)	Limit of Error ($\overline{X}$, 0.05)
872(a)	50	0.02	0.004
	52	99.97	0.004
	53	0.02	0.002
	54		
872(b)	50	0.01	0.005
	52	99.97	0.004
	53	0.01	0.005
	54	0.01	0.005

Nitrogen, Series HB-XBX

The need for small quantities of high-purity N^{15} for use in biological studies motivated the attempt to collect N^{15} enhanced from 0.36% natural abundance to some 80 to 90% N^{15}. Attainment of this purity was necessary for electromagnetically separated N^{15} to compete with 60% N^{15} produced at a more favorable price elsewhere. Exploratory collections were started on April 1, with the final runs in progress at the close of this period.

The problem of collection was a difficult one. In the evacuated system, neutral nitrogen would be present in large quantities in comparison to N^{15} ions, and this nitrogen would dilute the collected sample unless its concentration could be reduced materially or unless a selective getter could be found for use as a collector material.

Reduction of neutral nitrogen concentration was attempted by use of a titanium pump in which titanium wire wrapped around a tantalum filament was vaporized and later condensed on the water-cooled tank surfaces. Choice of the getter on which to collect N^{15} ions was complicated by several factors: (1) the probable ratio of nitrogen ion pickup to that of neutral nitrogen, (2) the stability of the product formed, (3) the vapor pressure of the product formed, and (4) the chemical problems associated with recovery of milligram quantities of N^{15} from multigram quantities of getter.

To date, the materials used as getters include magnesium, uranium, aluminum, and sodium, used in the order listed. No N^{15} was recovered from magnesium. Recovery from uranium shows N^{15} retention to vary from 7 to 13%, with product purity being 10 to 12% N^{15}. Beam scans taken during collection indicated that the N^{15} content should be approximately 90%. Attempts to explain collection of these samples having both low retention and low purity were unsatisfactory. Nitrogen recovery from aluminum or sodium has not yet been attempted because of the limited quantities collected.

Tellurium, Series HC-XAX

Collection of tellurium isotopes (Te^{120}, Te^{122}, Te^{123}, Te^{124}, Te^{125}, Te^{126}, Te^{128}, Te^{130}) was started on April 6 and is still in progress. The purpose of the collection was to replenish the inventory of tellurium isotopes, particularly Te^{123} and Te^{125}.

This separation is being performed in the Alpha tanks with the use of Beta ion sources and TeO_2 charge material. The operating temperature is in the 400 to 450°C range. Previously, medium-temperature ion sources having copper oven castings were used for tellurium separations. However, the separations had shown excessive copper telluride formation in the copper castings. This collection is being performed in the all-graphite source, whose usual temperature range is 600 to 1200°C. Approximately one-half of all heat shielding was removed from the source to eliminate telluride formation and thereby provide satisfactory operation.

In previous tellurium separations, another and more serious problem was the rejection of material from the receiver pocket. About 75% of the tellurium isotopes estimated to have entered the pocket were never recovered. Instead, this material, having the general appearance of soot, was rejected onto the exterior of adjacent pockets and faceplate, causing receiver shorts that made beam monitoring difficult. Aluminum pockets were fabricated for use in this collection on the assumption that aluminum telluride might form and remain in the collector in sufficient quantities to materially increase retention. Such appears to be the case.

Figure 17 shows a tellurium receiver with copper collector pockets. Figure 18 is the same receiver with aluminum collectors. The latter collector shows less rejected material than does the former; yet the aluminum pockets received some three to four times the number of ions that were received by the copper pockets.

Fabrication of aluminum pockets entailed development of a means of bonding aluminum to copper. Working jointly, W. K. Prater and P. L.

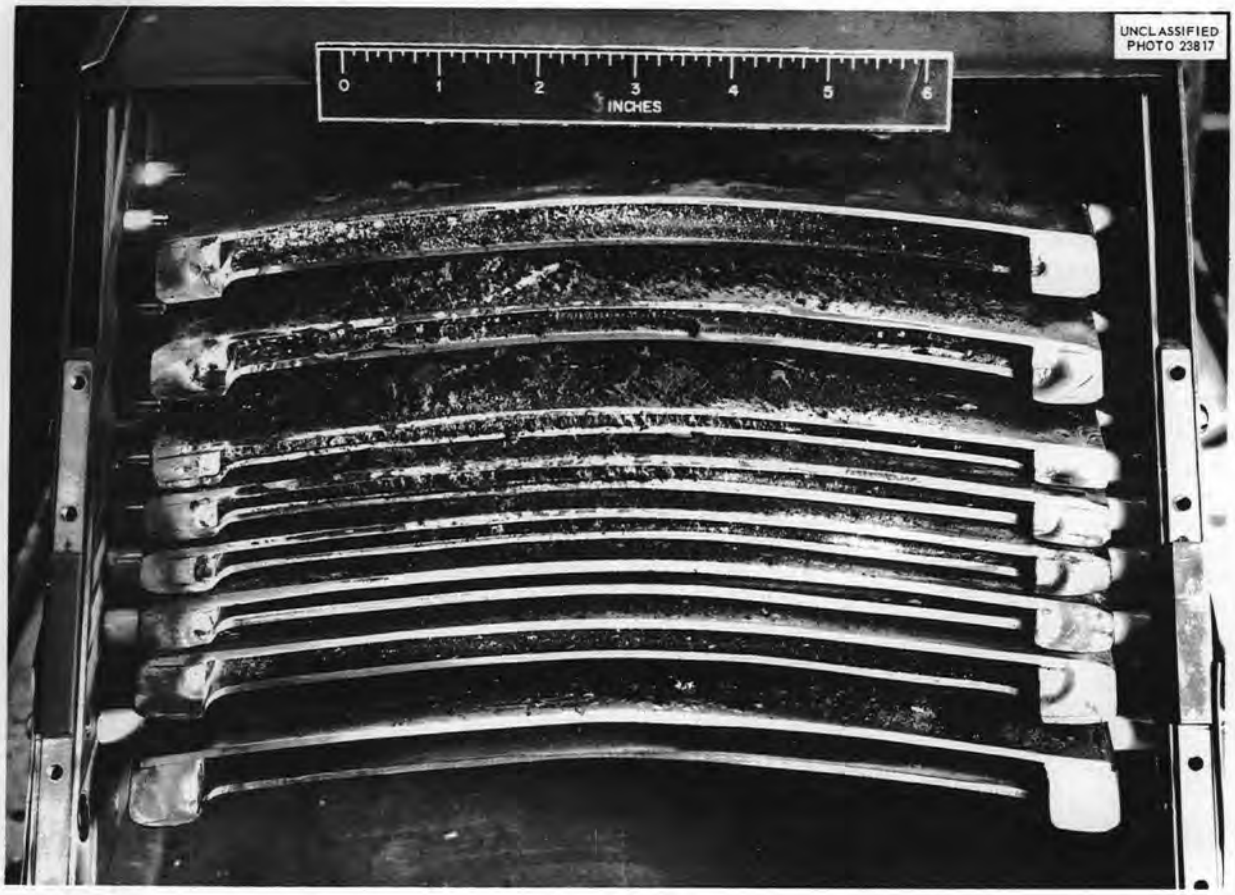

Fig. 17. Tellurium Receiver With Copper Collector Pockets.

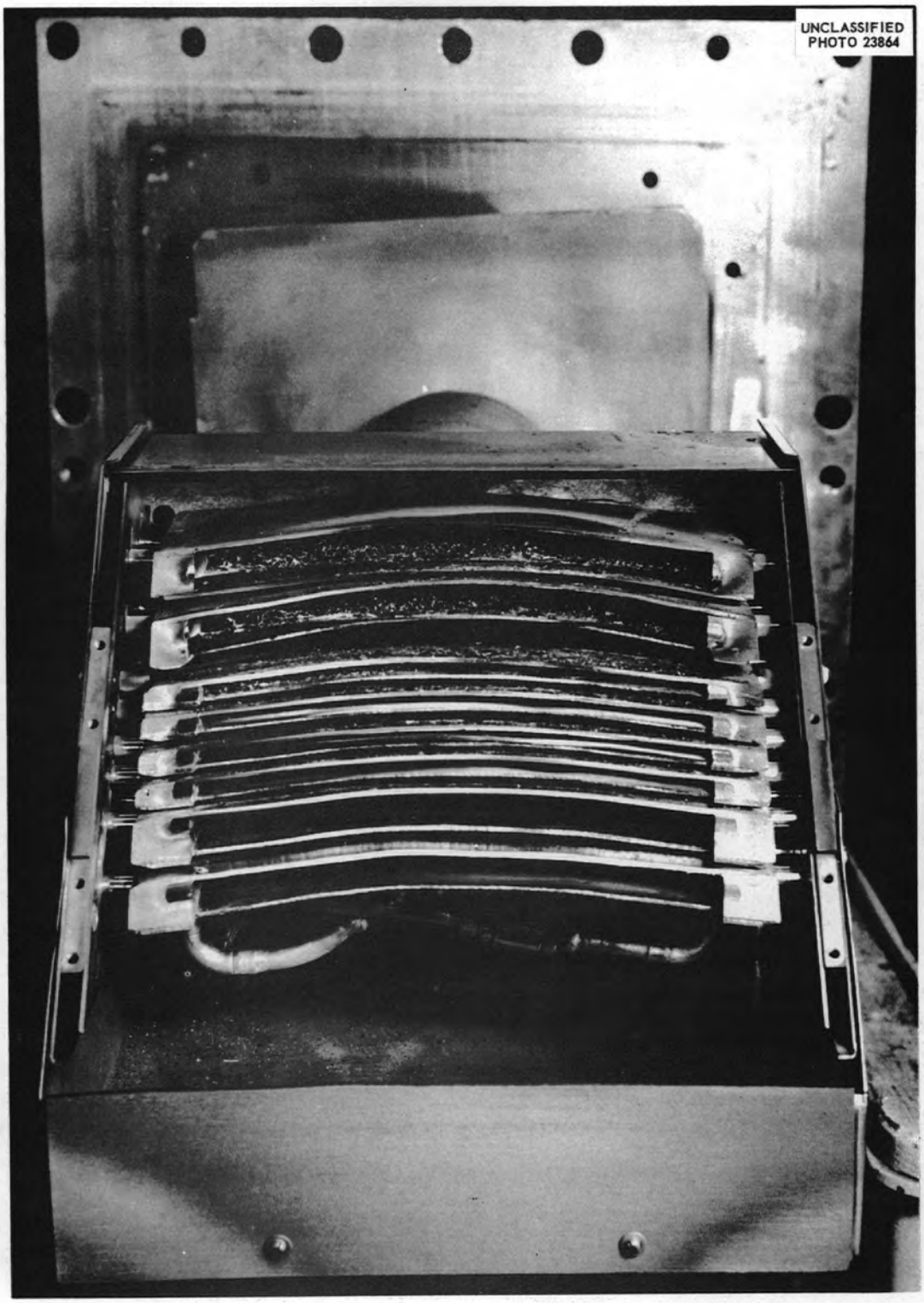

Fig. 18. Tellurium Receiver With Aluminum Collector Pockets.

Holland successfully bonded a copper water-cooling tube to the base of the aluminum pocket by Heliarc welding the two materials with No. 190 aluminum rod in the presence of aluminum soldering flux No. 190.[3]

The following estimated amounts, in grams, have been collected to date:

Te^{120}	0.26
Te^{122}	2.29
Te^{123}	1.55
Te^{124}	5.35
Te^{125}	9.24
Te^{126}	19.21
Te^{128}	39.73
Te^{130}	45.61
Total	123.24

[3] F. T. Howard and W. H Sullivan, *Oak Ridge National Laboratory Status and Progress Report April 1955*, ORNL-1886, p 11.

DECLASSIFIED REPORTS

The following reports have been declassified by the Atomic Energy Commission and are available for publication. They have been reprinted by the Technical Information Service of the U. S. Atomic Energy Commission.

Report No.	Title	Authors
Y-577	*The Electromagnetic Concentration of Beryllium-10*	W. A. Bell and L. O. Love
Y-623	*The Electromagnetic Concentration of Potassium-40*	L. O. Love and W. A. Bell
Y-628	*The Electromagnetic Concentration of Gallium-69 and 71*	W. A. Bell and L. O. Love
Y-669	*The Electromagnetic Concentration of Lead*	H. J. Buttram, W. A. Bell, and L. O. Love
Y-671	*The Electromagnetic Concentration of Bromine*	H. J. Buttram, L. O. Love, and W. A. Bell
Y-692	*The Electromagnetic Concentration of the Isotopes of Strontium*	W. A. Bell, H. J. Buttram, and L. O. Love
Y-693	*The Electromagnetic Concentration of the Stable Isotopes of Zinc*	L. O. Love, W. A. Bell, and H. J. Buttram
Y-779	*The Electromagnetic Concentration of the Stable Isotopes of Indium*	W. A. Bell and L. O. Love
Y-813	*The Electromagnetic Concentration of Carbon-12*	L. O. Love and W. A. Bell
AECD-3641	*The Electromagnetic Concentration of the Isotopes of Hafnium*	L. O. Love and W. A. Bell
AECD-3642	*Concentration of the Stable Isotopes of Chromium by the Electromagnetic Process*	C. V. Ketron, W. A. Bell, and L. O. Love

STABLE ISOTOPE CHEMISTRY

Boyd Weaver, Department Head

INTRODUCTION

Charge materials were prepared for the separation of isotopes of ten elements. Isotopes of seven elements were chemically refined. Unusually large quantities of europium oxide have been separated from rare-earth mixtures.

PREPARATION OF CHARGE MATERIALS

C. W. Sheridan W. C. Davis

Materials were prepared for the separation of the isotopes of ten elements: Rb, Ca, Fe, Ta, Cr, N, Te, Sr, Br, and Li. The only new experience was in the case of tantalum: tantalum metal in the form of filaments previously used in isotope separations was chlorinated in a tube furnace. The metal was heated to 300°C in chlorine to initiate the reaction, which was then controlled by controlling the flow of chlorine. The volatile $TaCl_5$ condensed in a cool part of the tube.

CHEMICAL REFINEMENT OF ISOTOPES

R. L. Bailey F. B. Thomas
W. C. Davis C. W. Sheridan
F. M. Scheitlin Boyd Weaver

Progress was made in the chemical refinement of seven elements: Ru, Cr, Fe, Ca, Rb, Ta, and N. The following discussion concerns chiefly those elements which have been processed through complete series.

Chromium

Experience with the refinement of several series of chromium isotopes has led to the development of definite procedures which give high purification of chromium collected on both copper and graphite.

Chromium metal collected on copper is recovered by the following procedure:

1. Dissolve chromium from copper with strong HCl solution containing H_2O_2.
2. Add H_2SO_4 and evaporate to strong fumes of SO_3.
3. Dissolve salts and dilute.
4. Electrolyze out all copper. A copper collector makes a satisfactory disposable cathode.
5. Dilute to an estimated chromium content of about 2 g/liter.
6. Heat to boiling, add NH_4OH carefully to the neutral point, and let settle.
7. Filter through a fast paper, wash repeatedly, dry, and ignite at 600°C. From this point the purification procedure is identical with that for the oxide from collections on graphite.

Chromium metal collected on graphite is refined by the following procedure:

1. Scrape external surfaces of collectors with emery cloth or glass to remove all contamination.
2. Ignite at 600°C in porcelain or Vycor.
3. Transfer to a beaker and add about 20 ml of 70% $HClO_4$ for each gram of oxide.
4. Heat until all green solids have been dissolved and oxidized.
5. Cool rapidly to room temperature.
6. Filter by suction on sintered glass and wash with $HClO_4$.
7. Dissolve the CrO_3 crystals with water, heat to boiling, and make ammoniacal.
8. Filter on paper and wash with hot, very dilute NH_4OH.
9. Cool filtrate and acidify with H_2SO_4.
10. Reduce with 6% H_2SO_3 or gaseous SO_2.
11. Heat to boiling, neutralize with NH_4OH, and let settle.
12. Filter through a fast paper and wash thoroughly with hot water.
13. Dry the hydroxide and ignite to Cr_2O_3 at 1000°C.

The problem of preparing chromic acid for plating solutions was solved by the use of $HClO_4$ in the same manner. The filtered CrO_3 crystals made satisfactory solutions, with no interference from residual $HClO_4$.

Production data for recent series of chromium isotopes are in Table 19.

Tantalum

The following procedure was used to refine Ta^{180} collected on graphite:

1. Ignite graphite containing tantalum at 600°C.
2. Dissolve Ta_2O_5 by prolonged treatment with a mixture of HF and HNO_3. Repeated additions of acid are necessary.
3. Filter through paper in a plastic funnel.
4. Precipitate hydrated Ta_2O_5 with NH_4OH, filter, redissolve with dilute HF, and reprecipitate until free of copper.

TABLE 19. PRODUCTION DATA ON CHROMIUM ISOTOPES

Isotope	Lot No.	Weight of Cr_2O_3 (g)	Impurities Found (%)			
			Al	Cu	Mg	Si
50	GR 836(a)	2.6400			0.01	0.05
52	GR 837(a)	91.360		0.01		0.02
53	GR 838(a)	6.8369		No impurities detected		
52	GS 841(a)	8.9100				0.05
50	GZ 868(a)	2.0625		0.02	0.03	0.02
52	GZ 869(a)	56.733		0.01		0.02
53	GZ 870(a)	6.0430		0.01	0.02	0.01
54	GZ 871(a)	1.3770			0.05	0.02
52	HA 872(a)	5.8132	<0.05			0.01
53	HA 872(b)	12.5810	<0.05		<0.01	0.1
52	HA 872(c)	0.7655	<0.05		<0.01	0.05

5. Redissolve with HF in platinum dish, add $HClO_4$, and heat until dense fumes of $HClO_4$ are given off and until HF is completely removed.
6. Cool and decant.
7. Wash repeatedly with hot HNO_3, decanting between each addition.
8. When $HClO_4$ is absent, wash with dilute HNO_3 and filter on paper.
9. Ignite at 600°C.

Satisfactory purification was obtained by this procedure, except that molybdenum from an unknown source persisted. The worst lot was retreated and then heated to about 1100°C to remove MoO_3. Removal was not complete. Apparently, Ta_2O_5 and MoO_3 form a very stable compound.

Production data on the final lots placed in the inventory after combination of lots having similar isotopic composition are in Table 20. The much larger quantity of Ta^{181} has not been processed.

TABLE 20. PRODUCTION DATA ON TANTALUM ISOTOPES

Isotope	Lot No.	Weight of Ta_2O_5 (g)	Impurities Found (%)			
			Fe	Mg	Mo	Ti
180	GY 864(a)	2.218		0.02	0.3	0.02
180	GY 864(c)	0.770	0.02	0.05		
180	GY 864(d)	1.395		0.02	0.3	0.1

Other Elements

Refinement of a series of ruthenium isotopes is nearing completion. A series of rubidium isotopes has been refined except for the removal of potassium impurity. Iron isotopes were refined by standard procedures previously published. Some progress has been made on a recent extended collection of calcium isotopes. Techniques have been developed and applied to the recovery of minute amounts of enriched N^{15} collected in a current separation program. The results of unfinished work will be published later.

SEPARATION OF RARE EARTHS

F. A. Kappelmann, R. L. Bailey, L. T. Royer, F. M. Scheitlin

Activities in the separation of rare earths have been directed chiefly toward the production of quantities of pure europium oxide. The operation of liquid-liquid extraction columns, by use of the nitric acid–tributyl phosphate system, has concentrated most of the 2 kg of Eu_2O_3 originally contained in 125 kg of mixed rare earths to only a few kilograms. Extraction operations are continuing with this material and with larger amounts of fractions depleted in europium; Eu_2O_3 concentrations up to more than 50% have been attained by extraction alone. Europium is much more easily separated from samarium than from gadolinium.

Europium concentrates of various compositions

have been enriched to pure europium by various reduction methods. Electrolysis of an acetate solution containing dilute H_2SO_4 precipitates nearly pure $EuSO_4$. However, the mercury pool necessary as a cathode soon becomes covered with the precipitate, and the rate of deposition rapidly decreases. It has usually been found impossible to reduce below about 1.5% the europium content of the rare earths left in solution.

Contact of rare-earth acetate solutions with sodium amalgam reduces both europium and samarium to amalgams. The rare earths left in solution contain about 0.2% europium. When the amalgam is poured through 12 *N* HCl, $EuCl_2$ is precipitated. Better results are obtained by washing out the europium with dilute H_2SO_4, which precipitates $EuSO_4$. Divalent samarium forms only slightly soluble $SmSO_4$, but it is readily oxidized by water. Only very little gadolinium enters the amalgam, and it tends to remain there when the europium is washed out. Thus, in this process, europium is much more readily separated from gadolinium than from samarium.

These reduction methods usually give at least 70% europium in one stage when the raw material contains as much as 10% europium. One repetition increases the purity to above 99% europium. About 200 g of high-purity Eu_2O_3 has been produced to date. This is equal to the normal national production for three years. By-products have included 2.5 kg of 99.6% Gd_2O_3 and much larger quantities of Sm_2O_3 and Gd_2O_3 of lesser purity.

Various research programs in several divisions of the Laboratory have been supplied with useful quantities of nearly all the rare earths.

PUBLICATIONS

The following reports have been prepared for distribution:

Report No.	Title	Authors
ORNL-1900	*Chemistry in the Electromagnetic Separation of Platinum Isotopes*	W. C. Davis and C. W. Sheridan
ORNL-1902	*Chemistry in the Electromagnetic Separation of Tantalum Isotopes*	Boyd Weaver, R. L. Bailey, and C. W. Sheridan

RESEARCH AND DEVELOPMENT STABLE ISOTOPES

P. S. Baker F. R. Duncan H. B. Greene

INTRODUCTION

The Research and Development Department has directed its efforts during the past six months for the most part into two types of endeavor: (1) special services, which includes conversions of inventory material into other desired forms, the preparation of targets of different sizes and shapes from isotopic material in various chemical forms, as well as the application to other problems of the techniques developed as a part of these special treatments; (2) isotope separations, particularly with respect to the collection and purification of gases.

SPECIAL SERVICES

As indicated previously,[1] the availability of special forms of enriched isotopes is an outgrowth of the increasing number of requests associated with expanding utilization of separated material. As might be expected, the knowledge that such a service is now provided has led to an increasing number of such requests.

Target Preparation

A year ago there was reported[2] the preparation of a 35-g target of Fe^{54}, by use of a powder metallurgical technique, for Westinghouse Research Laboratories. The success of this particular sample is evidenced by a recent request from the same Laboratories for similar targets of 27 additional isotopes in the elemental form. However, in an effort to satisfy the needs of Duke University for some of the same samples, a compromise target form was devised, with dimensions slightly different from those of the original one for Westinghouse. The targets now comprise coupons 1 × ⅓ in., with thicknesses determined by the amount of material available. With this arrangement, Westinghouse can form targets 1 × 1 in., with thicknesses as indicated above, while Duke can stack the coupons on top of each other to give a form 1 × ⅓ in. and a thickness three times as great. The compacting die is shown in Fig. 19.

Several metallic targets, each consisting of a circular wafer 1 in. in diameter, have been prepared for Stanford University. The compacting die for these targets is shown in Fig. 20.

To date, approximately 35 individual specimens have been prepared by using these two dies. Targets of Cu^{63}, Cu^{65}, and Ni^{58} have been prepared for both Westinghouse and Stanford; targets of Te^{125}, Te^{126}, Te^{128}, and Te^{130} for Westinghouse; and targets of Ni^{60}, Pb^{206}, Pb^{208}, and Li^{6} for Stanford. The copper and nickel coupons were formed by powder metallurgy techniques, which included reducing the oxides with hydrogen followed by compacting the resultant metal powder in appropriate dies at 50,000 psi. The thin Stanford wafers were sintered in hydrogen at 600°C for the copper and at 800°C for the nickel, while the

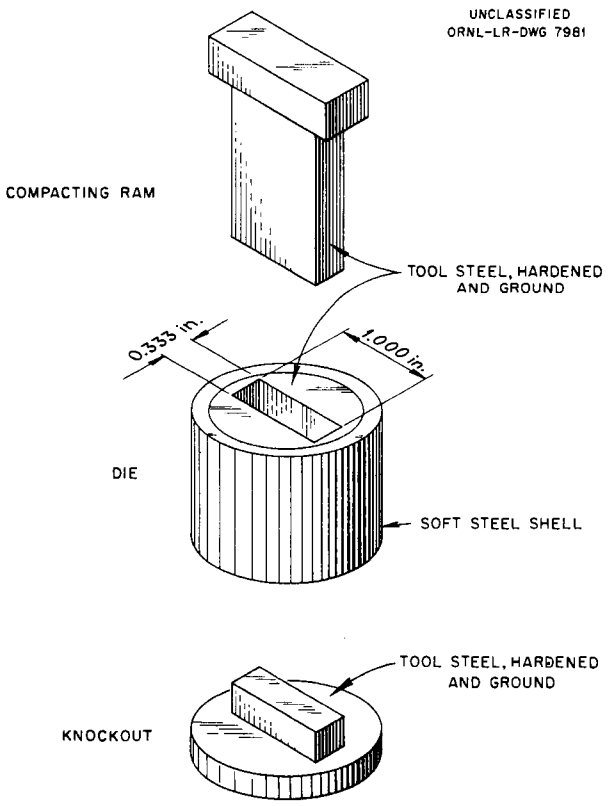

Fig. 19. Powder Metallurgy Forming Die (Westinghouse Order).

[1] P. S. Baker, H. B. Greene, F. R. Duncan, and W. M. Andrews, *Stable Isotope Research and Production Semiann. Prog. Rep. Nov. 20, 1954*, ORNL-1829, p 42.

[2] P. S. Baker, F. R. Duncan, and H. B. Greene, *Stable Isotope Research and Production Semiann. Prog. Rep. May 20, 1954*, ORNL-1732, p 41.

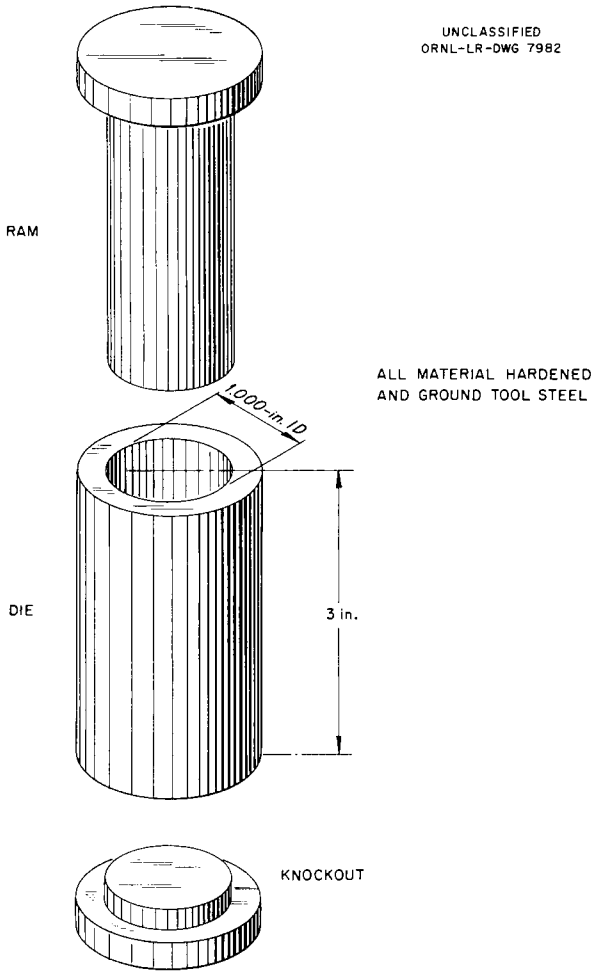

Fig. 20. Powder Metallurgy Forming Die (Stanford Order).

thick Westinghouse slugs were found to be sufficiently strong to be used without sintering. The two Stanford bombardment targets of Li^6, 1 in. in diameter with a thickness of 0.200 and 0.300 in., respectively, were cold-formed from existing supplies of this isotope. The tellurium isotopic targets were prepared by hot pressing tellurium powder at 250°C and 30,000 psi.

In addition to the above target preparations, $1\frac{1}{4}$-in.-dia tantalum disks have been coated with thin films of B^{10} for the University of Kentucky by thermal decomposition of diborane (B_2H_6) by use of the procedure reported previously.[3] Unfortunately, these targets were found to contain traces of fluorine from an unknown source, and they must be reworked to eliminate this impurity.

Requests for metallic isotopic lithium samples have continued during the period, and three batches of Li^7 of from 50 to 100 g each have been prepared for Los Alamos from the chloride by reduction with barium in the manner previously reported.[4]

One batch of Si^{30} has been reduced from the oxide according to a procedure described earlier.[1]

Special Procedures

As has been true previously, there have been unusual techniques and procedures developed in connection with these special services; several of them are mentioned below:

1. In cases where metals can be rather readily formed by reduction of their oxides with carbon and/or hydrogen, a technique has been worked out with the help of W. C. Davis of the Isotope Chemistry Department to give metallic pellets suitable for die forming, rolling, etc. The oxide is placed in a short length of $\frac{5}{16}$-in. spectroscopic carbon rod which has been drilled out with a $\frac{1}{4}$-in. drill. This container can then be heated carefully in a hydrogen atmosphere or simply heated with a torch to give rather rapid reduction to the metal. In the former case, the yields are somewhat more quantitative, probably because the temperature control is better. The use of spectroscopic carbons precludes contamination by those impurities present in ordinary graphite, and also aids the metal in forming a pellet which is easy to remove. Samples of Sn^{124} and Pb^{204} for Duke University and a sample of Pb^{208} for Princeton University have been prepared in this way.

2. In the case of the Stanford lead sample, the problem of obtaining the metal was aggravated by the fact that the lead was present in inventory as $PbCrO_4$. Mr. Davis worked out a procedure for electrolyzing a dilute nitric acid solution of the $PbCrO_4$ to plate out the lead as PbO_2 on the anode. The PbO_2 was then dissolved, precipitated as carbonate, and converted to oxide prior to the reduction mentioned above.

3. Much time was devoted to the development of a method for preparing small quantities of elemental B^{11} in order that a reasonable amount might be available for stocking in inventory and in order

[3] P. S. Baker, H. B. Greene, F. R. Duncan, and W. M. Andrews, *Stable Isotope Research and Production Semi-ann. Prog. Rep. Nov. 20, 1954*, ORNL-1829, p 45.

[4] P. S. Baker, F. R. Duncan, and H. B. Greene, *Lithium Metal Production*, ORNL CF-53-4-185, p 6 (May 1, 1953).

that a request from Naval Research Laboratories for 1 g might be filled. This isotope is currently available as the complex $CaF_2 \cdot BF_3$ — the by-product from a program for the enrichment of B^{10} executed by Columbia University and Standard Oil of Indiana several years ago.[5]

An attempt to duplicate on a small scale the reduction process used by this same group for producing multipound quantities of B^{10} proved to be unsatisfactory. This process consists in reducing BCl_3 in a hydrogen atmosphere on a wire or rod of Ta, W, C, or Mo, heated to a temperature of 1100 to 1200°C. At the interface between the rod and the deposited boron, appreciable quantities of the boride of the rod material are formed. Successive layers of boron then become increasingly pure. Since at the end of the run the boride layer is removed along with the desired boron and is chemically inseparable from it, percentage-wise contamination can be held within acceptable limits only by building up relatively thick layers of pure material. For the quantities needed at present, however, the procedure proved to be infeasible. Also, recycling of the unreacted BCl_3 would be necessary because the yield per pass was generally only of the order of 35%.

An electrolytic process developed by H. S. Cooper[6] proved to be much more satisfactory for our purpose. The electrolysis is performed in a fused mixture of KCl and KBF_4, the containing vessel serving as the anode and a rod of iron, copper, or molybdenum, shielded with an inert gas, serving as the cathode. Details of cell construction are shown in Fig. 21.

The products of electrolysis are chlorine, which is formed at the anode, and elemental boron, deposited as a porous lumpy mass on the cathode. There is a progressive buildup of KF in the bath. At first, there was a severe, corrosive attack on the cathode where it entered the fused bath; this resulted in contamination of the boron with insoluble compounds of the cathode material. The corrosion appeared to result from an initial oxidation of the cathode either by oxygen from the air or by chlorine from the cell, followed by solution of the oxidation products in the salt bath. Introduction of the inert gas shield effectively solved the problem.

During operation, there is very little drag-out, spray, or volatilization; hence the loss of isotopic material is negligible. Bath temperature and current density are not critical, and the cell has been successfully operated throughout the temperature range from the melting point of the salt mixture (650 to 700°C) up to 1000°C. With the described apparatus the maximum current density is limited to approximately 2 amp/in.^{2} by the available power supply. The efficiency of the electrolytic cell is in excess of 90%, based on the weight of the charged boron. Over-all process efficiency, including conversion of $CaF_2 \cdot BF_3$ to KBF_4, is 85 to 90%. Some contamination of the boron with chromium and nickel from the Inconel vessel cannot be avoided and appears to be a function of the length of time of exposure of the vessel to the salts. This is evidenced by the fact that boron produced during the first few hours of the run is essentially free of this contamination. However, material which is deposited in an impure condition during the later stage can be further purified by prolonged leaching in concentrated HCl.

The product boron on the cathode is jet black and appears to be a mixture of both crystalline and amorphous forms. It may be readily removed by soaking the cathode in boiling water for a few minutes.

4. Concurrently with $CaF_2 \cdot BF_3$ being processed to elemental B^{11}, an apparatus was assembled to produce H_3BO_3 from the same complex. The procedure for this conversion comprised liberation of BF_3 from the complex by strong heating, reaction of the BF_3 with $AlCl_3$ to form BCl_3, and, finally, absorption of the BCl_3 in H_2O, at which time it hydrolyzes to HCl + H_3BO_3. The boric acid then is recovered from solution by careful evaporation and recrystallization.

Cooperative Calutron-Cyclotron Program

Results of the Cr^{54}, Te^{125}, and Te^{130} target bombardments in the cyclotron to make radionuclides of Mn^{54}, I^{125}, and I^{130}, respectively,[7] were eminently satisfactory. The chemical recoveries of the unconverted enriched isotopes were good in the three instances, pointing up the

[5] M. Kilpatrick, C. A. Hutchison, Jr., E. H. Taylor, and C. N. Judson, *Separation of Boron Isotopes*, NNES III-5 (1952).

[6] H. S. Cooper, U. S. Patents 2,572,248 and 2,572,249 (Oct. 23, 1951).

[7] P. S. Baker, H. B. Greene, F. R. Duncan, and W. M. Andrews, *Stable Isotope Research and Production Semiann. Prog. Rep. Nov. 20, 1954*, ORNL-1829, p 43–45.

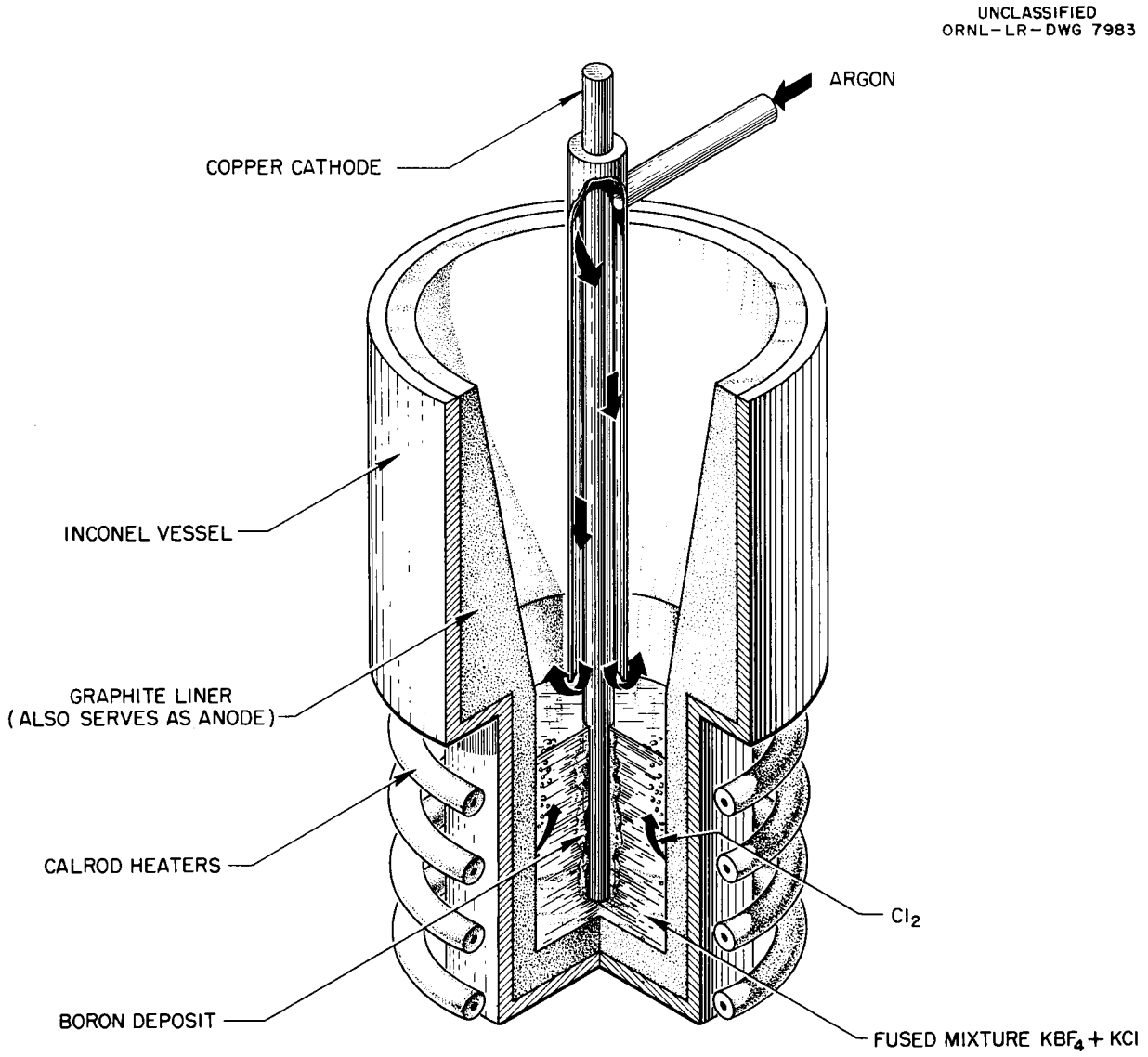

Fig. 21. Electrolytic Cell for Boron.

fact that in many cases enriched isotopes will be extremely advantageous for cyclotron work of this nature.

SEPARATION OF STABLE ISOTOPES

Shortly after the last report was issued, a conference with two representatives from Mound Laboratories resulted in a suspension, for the time being, of the investigation of the separation of helium by thermal-diffusion methods. Since Mound Laboratories is set up to do thermal-diffusion work, it seems far more advantageous for them to use their already existing equipment than for ORNL to have to build the equipment. The resolution of the matter is awaiting disposition of Mound's proposal to carry out this program. The program here has continued with experiments involving calutron collections of gases and their purification.

As indicated previously,[8,9] the chief difficulty

[8] P. S. Baker, F. R. Duncan, and H. B. Greene, *Stable Isotope Research and Production Semiann. Prog. Rep. May 20, 1954*, ORNL-1732, p 39.

[9] P. S. Baker, H. B. Greene, F. R. Duncan, and W. M. Andrews, *Stable Isotope Research and Production Semiann. Prog. Rep. Nov. 20, 1954*, ORNL-1829, p 45.

in gas collections has been one of retention. It has been found that receiver surfaces become saturated with the gas being collected after only a small amount of material has reached the collector; this has suggested that a continuously renewed surface might be advantageous in collections of this sort. In order to provide a simple gas-collecting receiver capable of renewing the collecting surface over extended periods of time at normal receiving rates, a system for evaporating and condensing a suitable metal on the beam target was studied.

Some preliminary experiments indicated that aluminum could be evaporated from a hollow tantalum filament by heating the filament with a suitable low-voltage high-current power supply. The hollow filament lends itself nicely to receiver design. Unfortunately, molten aluminum wets the tantalum, and, as the amount of aluminum decreases, the vaporization characteristics of the filament change, making it difficult to control the evaporation rate.

Since magnesium sublimes directly in vacuum and desirable rates may be reached at lower temperatures than with aluminum, a resistance-heater furnace small enough to be placed in the receiver was built for the evaporation of magnesium. This furnace consisted of two concentric stainless steel tubes with appropriate vapor slots, between which was sandwiched a winding of Chromel-A heater wire and mica insulation. The over-all dimensions were approximately $\frac{3}{4}$ in. in outside diameter by 4 in. in length. The heating and the temperature control were simplified by use of a 110-v power supply and a Variac. Such an arrangement is shown in Fig. 22. Magnesium was sublimed at 400 to 500°C and condensed on the water-cooled target simultaneously with the reception of the monitored gas beam. The target itself was constructed from six lengths of flattened $\frac{3}{8}$-in. copper tubing arranged so as to give an exposed surface approximately $2\frac{3}{4} \times 7$ in. With the use of this receiver, a run was made in the 24-in.-radius calutron, collecting A^{40}. A 3-ma beam was maintained for $2\frac{1}{2}$ hr on the target while the miniature furnace was held at approximately 490°C. Upon termination of the run, it was found that the magnesium could be easily scraped from the target as small flakes. These flakes were then placed in a quartz tube of an evacuated handling system, and the gas obtained from outgassing was cleaned of impurities as indicated below. The yield from this run was 2.4 cc (STP), with an isotopic analysis of A^{40},

UNCLASSIFIED
ORNL-LR-DWG 7984

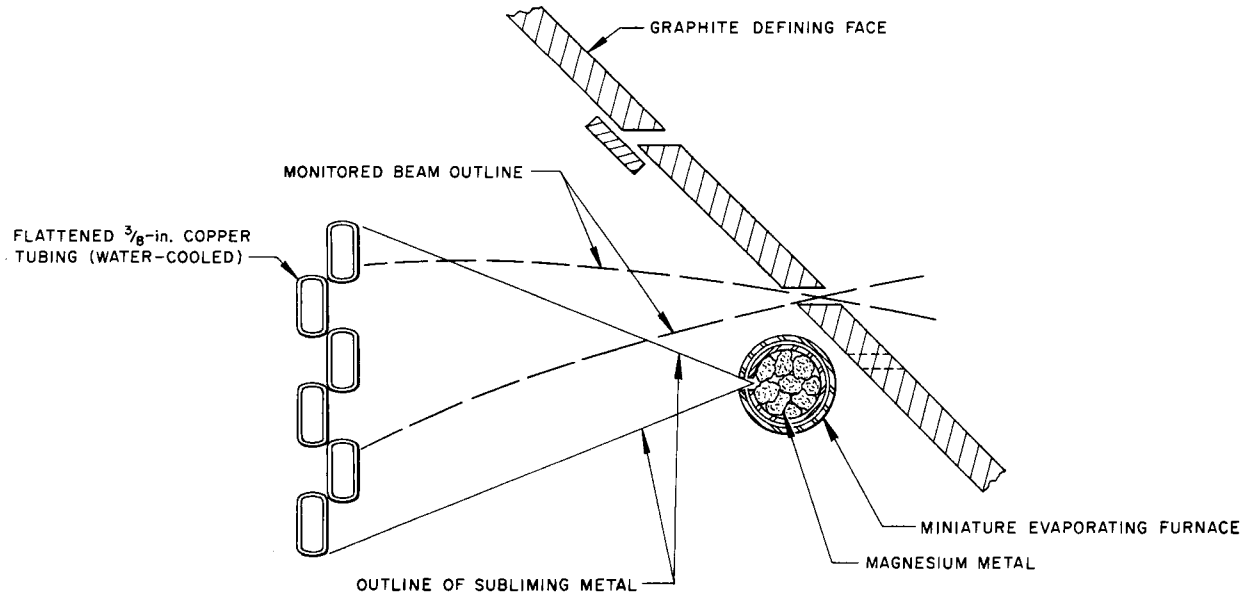

Fig. 22. Calutron Receiver for Gases.

99.99 ± 0.01%; A^{38}, 0.008 ± 0.005%; and A^{36}, 0.005 ±0.002%.

Since the Calutron Operations Group was attempting nitrogen collections concurrently with the work just described, it was decided to use the argon equipment for a nitrogen collection. Without any modification in design, the target was cleaned with acid and the receiver was installed in the calutron tank and exposed to a 3-ma beam of N^{14} for about 1½ hr. The magnesium furnace was heated during this time to about 460 to 470°C. In this case, the condensed metal on the target adhered strongly where the beam was most intense, making it difficult to scrape off. All metal which could be removed without filing was scraped off in order to check for free nitrogen by outgassing at 400°C. The nitrogen yield was extremely small, and impurities still present made mass analysis impossible.

One-half the scrapings which had been outgassed were dissolved in dilute HCl, and the resulting solution was made basic and heated to drive off any ammonia formed from Mg_3N_2 which might have been present. The issuing gases were trapped in dilute HCl, and the solution was evaporated to dryness. The resulting solid was treated with sodium hypobromite to convert any NH_4Cl to N_2 according to the equation[10]

$$2NH_3 + 3NaOBr \rightarrow N_2 + 3H_2O + 3NaBr$$

The yield turned out to be approximately 0.42 cc of N_2 (STP), with an isotopic distribution of N^{14}, 99.85 ± 0.01%; and N^{15}, 0.15 ± 0.01%. The recovery represented roughly one-eighth of the monitored beam, and, since it was from one-half of the turnings, the retention appears to have been about 25%.

Several methods for purifying the gases obtained by outgassing metal calutron targets from inert gas collections have been tried; the most practical one involved the passing of the gas through hot uranium chips and then through activated uranium powder.[11] By suitable control of temperatures while the gases were being recirculated, it has been possible to obtain samples with chemical purities greater than 99.5%.

CURRENT PROBLEMS

In addition to continuation of the programs outlined above, several specific problems are currently being investigated:

1. Exploratory work has been done on the problem of reducing small amounts of magnesium oxide to the metal and fabricating cyclotron targets from the resulting metal. Metallic magnesium has been obtained by electrolyzing a fused mixture of $MgCl_2$ and KCl, but the suitability of the procedure has not yet been evaluated.
2. Johns Hopkins University has expressed an interest in single crystals of isotopic Li^6F. Thus far, no good method for producing these crystals has been worked out, although the Verneuil furnace[12] may be suitable.
3. The problem of plating iridium and rhenium on suitable backings has not yet been solved satisfactorily.
4. The preparation of cyclotron targets surfaced with small quantities of metallic Ca^{48} is being investigated.

[10] R. F. Glascock, *Isotopic Gas Analysis for Biochemists*, p 195 ff., Academic Press, New York, 1954.

[11] A. S. Newton, *The Purification of Some Laboratory Gases*, MDDC-724 (declassified Jan. 1, 1947).

[12] R. K. Verma, G. N. Sirkar, and S. Chatterjee, *J. Sci. Ind. Research (India)* 13A, 516 (1954).

UTILIZATION OF ENRICHED STABLE ISOTOPES

The shipments of enriched stable isotopes that were made during the ten-year period, 1946 to 1955, are illustrated in Fig. 23. It will be noted that the shipments through 11 months of FY-1955 have already exceeded the total for the best previous year by about 5%. This can be ascribed to the increase in number of cross-section measurements and to the availability of special target forms of the isotopes.

Table 21 gives a summary of the isotope shipments during the period from November 20, 1954, through May 20, 1955. The asterisks in this table indicate those shipments which required special services (see section "Research and Development"). About 10% of the total falls in this category. Table 22 indicates the distribution of the shipments, as well as the number of shipments by months.

Table 23 is a list of pending requests for isotopes which have not yet been approved by the AEC. Included are the reasons for withholding approval.

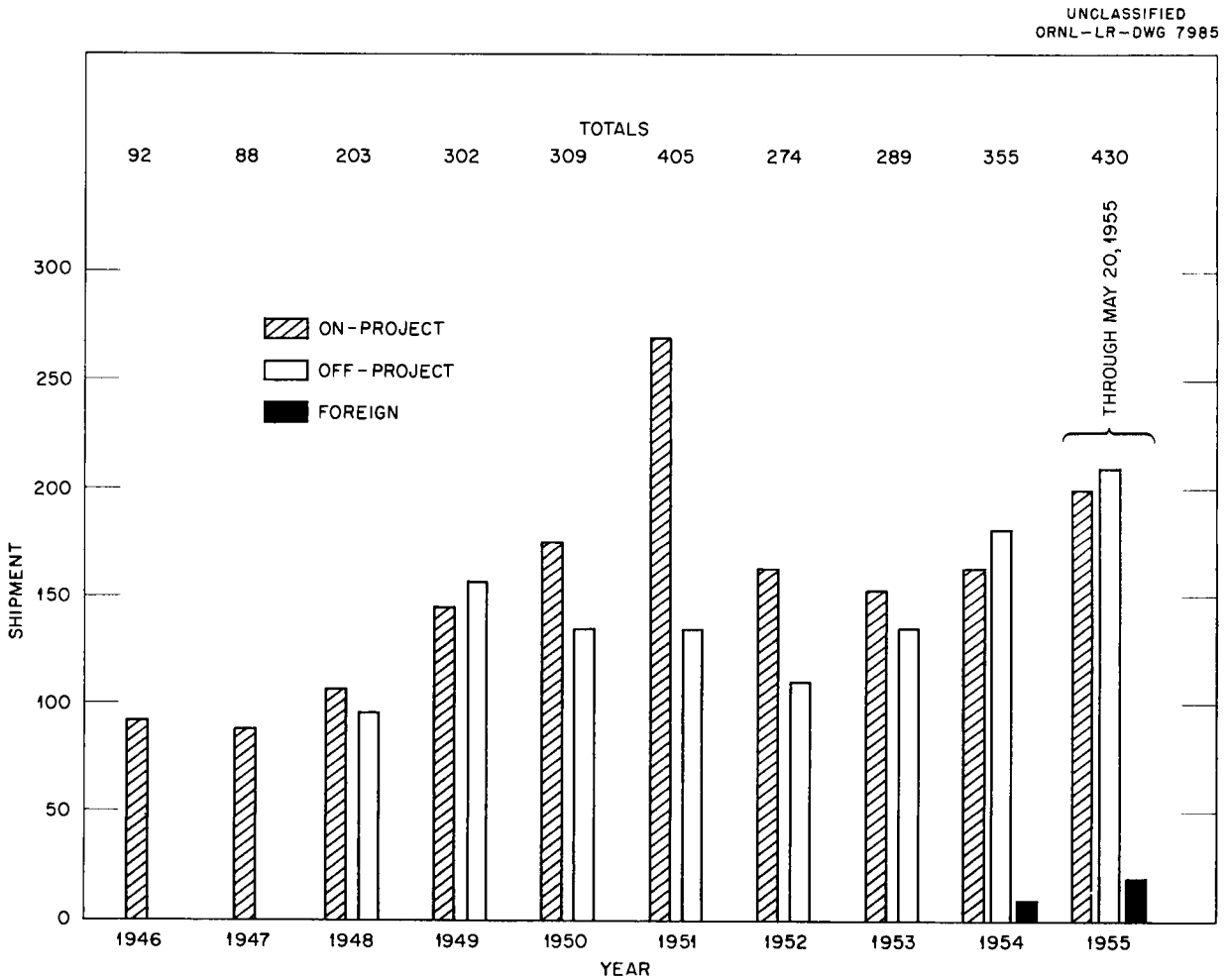

Fig. 23. Shipments of Enriched Stable Isotopes – 1946 to 1955.

TABLE 21. SUMMARY OF ISOTOPE SHIPMENTS, NOVEMBER 20, 1954 TO MAY 20, 1955

Request No.	Requester	Isotope	Lot	Quantity (mg)
B-4896	University of Michigan	Pt^{198}	GH 781(a)	107
B-4772	Massachusetts Institute of Technology	Cl^{37}	DH 438(a)	11
B-4825-S	Argonne National Laboratory	Cr^{50}	EU 609(a)	351
B-4824-S	Argonne National Laboratory	Cr^{52}	CD 310(a)	1,001
B-4941	University of Wisconsin	Gd^{154}	GK 799(a)	156
B-4942	University of Wisconsin	Gd^{155}	GK 800(a)	303
B-4943	University of Wisconsin	Gd^{156}	GK 801(a)	304
B-4944	University of Wisconsin	Gd^{157}	GK 802(a)	304
B-4945	University of Wisconsin	Gd^{158}	GK 803(a)	306
B-5057-S	Oak Ridge National Laboratory	Zr^{90}	EE 539(a)	502
B-5001-S	Brookhaven National Laboratory	Ni^{62}	FJ 672(a)	504
B-5000-S	Brookhaven National Laboratory	Fe^{54}	FN 685(b)	1,503
B-5022-S	Oak Ridge National Laboratory	Pt^{190}	GH 776(a)	152
B-5023-S	Oak Ridge National Laboratory	Pt^{192}	GH 777(b)	704
B-5024-S	Oak Ridge National Laboratory	Pt^{194}	GH 778(a)	5,004
B-5025-S	Oak Ridge National Laboratory	Pt^{195}	GH 779(a)	753
B-5026-S	Oak Ridge National Laboratory	Pt^{196}	GH 780(a)	6,002
B-5027-S	Oak Ridge National Laboratory	Pt^{198}	GH 781(b)	986
B-5002-S	Oak Ridge National Laboratory	Cd^{106}	CE 314(a)	62
B-5003-S	Oak Ridge National Laboratory	Cd^{108}	AX 170(a)	69
B-5004-S	Oak Ridge National Laboratory	Cd^{110}	CE 316(a)	201
B-5005-S	Oak Ridge National Laboratory	Cd^{111}	CE 317(a)	206
B-5006-S	Oak Ridge National Laboratory	Cd^{112}	CE 318(a)	202
B-5007-S	Oak Ridge National Laboratory	Cd^{113}	CE 319(a)	204
B-5009-S	Oak Ridge National Laboratory	Cd^{116}	CE 321(a)	104
B-5047-S	Oak Ridge National Laboratory	Cr^{50}	EU 609(a)	50
B-3269	University of California at Los Angeles	S^{33}	GB 758(a)	101
B-4938	University of Washington	Ru^{102}	GJ 795(b)	104
B-4838	University of California	La^{138}	GO 823(a)	802
B-5034	Indiana University	Te^{128}	FE 646(a)	406
B-5033	Indiana University	Ca^{44}	FF 651(a)	202
B-5044	Columbia University	Fe^{54}	FN 685(b)	809
B-5045	Columbia University	Ni^{58}	FJ 669(a)	51
B-5046	Columbia University	Ni^{64}	J 32(a)	10
B-4823-S	Argonne National Laboratory	Cr^{54}	CD 312(a)	50

TABLE 21 (continued)

Request No.	Requester	Isotope	Lot	Quantity (mg)
B-4991	Washington University	Zn^{68}	EK 559(a)	150
B-4990	Washington University	Zn^{67}	BK 242(a)	21
B-4989	Washington University	Zn^{66}	EK 557(a)	149
B-4988	Washington University	Ni^{62}	FJ 672(a)	149
B-4987	Washington University	Ni^{61}	FJ 671(a)	149
B-4986	Washington University	Ni^{60}	FJ 670(a)	150
B-4562	Washington University	Cr^{53}	EU 611(a)	12
B-3018	University of Rochester	Zr^{96}	GQ 835(a)	201
B-5078-S	Brookhaven National Laboratory	Hf^{179}	GP 829(a)	26
B-5089-S	Brookhaven National Laboratory	Sr^{87}	FL 681(a)	1,000
B-4977	Carnegie Institution of Washington	Mo^{98}	AW 168(a)	101
B-5053	Johns Hopkins University	Fe^{57}	DK 449(a)	201
B-4793	Bell Telephone Laboratories	Si^{28}	EB 524(a)	5,000
B-4877-S	Oak Ridge Institute of Nuclear Studies	Te^{130}	FE 647(a)	1,000
B-4959-S	Argonne National Laboratory	Cu^{63}	FJ 673(a)	1,001
B-4958-S	Argonne National Laboratory	Cu^{65}	DU 498(a)	1,001
B-5056-S*	Oak Ridge National Laboratory	Li^{7}	FY 746(c)	10,200
B-5076	Harvard University	Ga^{71}	EI 555(a)	501
B-5065	Massachusetts Institute of Technology	Pd^{105}	GG 772(a)	100
B-5066	Massachusetts Institute of Technology	Cd^{111}	CE 317(a)	101
B-5067	Massachusetts Institute of Technology	Cd^{113}	CE 319(a)	101
B-5029-S	Argonne National Laboratory	Fe^{56}	GW 861(a)	50
B-5132-S	Los Alamos Scientific Laboratory	Mg^{25}	BZ 289(a)	31
B-5132-S	Los Alamos Scientific Laboratory	Mg^{26}	BZ 290(a)	46
B-5172-S	Los Alamos Scientific Laboratory	Hf^{180}	GP 830(a)	4,001
B-4022	Ohio State University	Fe^{54}	FN 685(b)	501
B-4969	University of Wisconsin	Hg^{199}	DR 487(ds)	200
B-4970	University of Wisconsin	Re^{185}	CP 356(a)	402
B-4971	University of Wisconsin	Ir^{191}	GL 810(a)	401
B-5173-S*	Los Alamos Scientific Laboratory	Li^{7}	FI 668(i)	15,100
B-5055*	Californiu Institute of Technology	Li^{6}	FY 745(bd)	255
F-2104-T	Federal Republic of Germany	Sm^{147}	GM 814(a)	10
F-2105-T	Federal Republic of Germany	Sm^{149}	GH 663(a)	10
F-2106-T	Federal Republic of Germany	Gd^{152}	GK 798(a)	1
F-2107-T	Federal Republic of Germany	Gd^{154}	GK 799(a)	4

*Special services.

TABLE 21 (continued)

Request No.	Requester	Isotope	Lot	Quantity (mg)
B-4313-S	Brookhaven National Laboratory	Gd^{155}	GK 800(a)	2,001
B-5091-S	Brookhaven National Laboratory	Gd^{156}	GK 801(a)	2,001
B-4314-S	Brookhaven National Laboratory	Gd^{157}	GK 802(a)	2,000
B-5092-S	Brookhaven National Laboratory	Gd^{158}	GK 803(a)	2,001
B-5169*	Yale University	Li^{7}	GE 767(l)	1,000
B-5170*	Yale University	Li^{6}	GD 764(e)	220
B-5088	University of Pennsylvania	Pd^{105}	GG 772(a)	101
B-5085	Washington University	Ni^{58}	FJ 669(a)	4,003
B-5198-S	Brookhaven National Laboratory	Ni^{58}	DF 422(a)	500
B-5114-S	Oak Ridge National Laboratory	Pd^{104}	GG 771(a)	151
B-5115-S	Oak Ridge National Laboratory	Pd^{105}	GG 772(a)	101
B-5116-S	Oak Ridge National Laboratory	Pd^{106}	GG 773(a)	150
B-5117-S	Oak Ridge National Laboratory	Pd^{108}	GG 774(a)	151
B-5118-S	Oak Ridge National Laboratory	Pd^{110}	GG 775(a)	150
B-5119-S	Oak Ridge National Laboratory	Re^{185}	CP 356(a)	300
B-5120-S	Oak Ridge National Laboratory	Re^{187}	CP 357(a)	300
B-5124-S	Oak Ridge National Laboratory	Ru^{96}	GJ 790(a)	81
B-5129-S	Oak Ridge National Laboratory	Ru^{102}	GJ 795(b)	101
B-5121-S	Oak Ridge National Laboratory	Pt^{195}	GH 779(a)	151
B-5122-S	Oak Ridge National Laboratory	Ir^{191}	GL 810(a)	200
B-5123-S	Oak Ridge National Laboratory	Ir^{193}	GL 811(a)	301
B-5175	Carnegie Institution of Washington	Pb^{208}	O 46(ar)	51
B-4976	Carnegie Institution of Washington	Mo^{100}	R-T 59(b)	33
			R-T 59(a)	5
B-5135-S	Argonne National Laboratory	Re^{187}	CP 357(a)	10
B-4059	Bartol Research Foundation	Pt^{190}	GH 776(a)	25
B-4060	Bartol Research Foundation	Pt^{192}	GH 777(a)	26
B-5195	Naval Research Laboratory	Te^{125}	DX 509(a)	100
F-2141-T	Union of South Africa	Sr^{86}	Z 78(ar)	20
B-5174*	Johns Hopkins University	Li^{7}	FI 668(i)	532
B-4756	University of Kentucky	B^{10}	SS 866(b)	10
B-5106	University of Chicago	Sr^{84}	FL 679(a)	5
B-5210	Carnegie Institution of Washington	Sm^{150}	FH 664(a)	200
B-5211	Carnegie Institution of Washington	Sm^{148}	GM 815(a)	201

*Special services.

TABLE 21 (continued)

Request No.	Requester	Isotope	Lot	Quantity (mg)
B-5227-S	Los Alamos Scientific Laboratory	Ce^{138}	FR 707(a)	21
B-5226-S	Los Alamos Scientific Laboratory	Hf^{174}	GP 825(a)	10
B-5208-S	Los Alamos Scientific Laboratory	Si^{30}	GC 763(a)	54
B-5191	University of Pennsylvania	Sr^{86}	FL 680(a)	691
B-5192	University of Pennsylvania	Sr^{87}	FL 681(a)	330
B-5193	University of Pennsylvania	Sr^{88}	FL 682(a)	501
B-5194	University of Pennsylvania	Zr^{92}	CK 336(ar)	1,001
B-5008-S	Oak Ridge National Laboratory	Cd^{114}	CE 320(a)	200
B-5177	Naval Research Laboratory	Sn^{119}	EC 533(a)	100
B-5178	Naval Research Laboratory	Sn^{117}	BI 231(bs)	103
B-5179	Naval Research Laboratory	Sn^{115}	EC 529(a)	101
B-5182-S*	University of California Radiation Laboratory	Li^{7}	FI 668(i)	5,150
B-5187	Westinghouse Electric Corporation	Zr^{91}	GQ 832(a)	3,035
B-5199	Westinghouse Electric Corporation	Zr^{92}	CK 336(ar)	1,140
			GQ 833(a)	4,741
B-5200	Westinghouse Electric Corporation	Zr^{94}	CK 337(ar)	1,780
			GQ 834(a)	4,440
B-5216	The Rice Institute	Cd^{111}	CE 317(a)	200
B-5217	The Rice Institute	Ce^{142}	FR 709(a)	200
B-5249-S	Argonne National Laboratory	Se^{77}	CY 399(a)	500
B-5246-S	Argonne National Laboratory	Ti^{49}	GA 755(a)	700
B-5240-S	Brookhaven National Laboratory	Sm^{149}	GM 816(a)	1,000
B-5262	Carnegie Institution of Washington	Mo^{96}	AW 166(a)	60
B-5263	Carnegie Institution of Washington	Mo^{94}	FP 696(a)	60
B-5272	Carnegie Institution of Washington	Ge^{76}	BD-BE 209-14(a)	100
B-5242	The Rice Institute	Zn^{68}	BN 243(a)	51
B-5243	The Rice Institute	Zn^{67}	BK 242(a)	25
B-4933	Ohio State University	Ce^{136}	FR 706(a)	11
B-4932	Ohio State University	B^{11}	DP 482(a)	100
B-4931*	Ohio State University	Li^{6}	FY 745(bd)	260
B-5241-S	Brookhaven National Laboratory	Sm^{152}	GM 818(a)	2,001
B-5258	The Rice Institute	Cl^{37}	FW 737(b)	150
B-5259	The Rice Institute	Cl^{35}	FW 736(a)	150
B-3249-S	Brookhaven National Laboratory	Ni^{64}	GT 848(a)	101
B-5255	University of California	Gd^{157}	GK 802(a)	200

*Special services.

TABLE 21 (continued)

Request No.	Requester	Isotope	Lot	Quantity (mg)
B-5256	University of California	Gd^{155}	GK 800(a)	201
B-5281	Massachusetts Institute of Technology	K^{41}	EY 626(e)	50
B-5181-S	University of California Radiation Laboratory	B^{10}	FV 734(a)	500
B-4468	Duke University	Mg^{25}	DZ 520(a)	1,502
B-4467	Duke University	Mg^{26}	DZ 290(a)	1,640
B-5287	University of California	Gd^{152}	GK 798(a)	50
B-5288	University of California	Gd^{154}	GK 799(a)	199
B-5224	Ohio State University	Sm^{144}	GM 813(b)	100
B-5291	Naval Research Laboratory	Re^{187}	CP 357(a)	250
B-5247-S	Argonne National Laboratory	Ti^{47}	EN 577(a)	440
B-5297-S	Argonne National Laboratory	Se^{78}	BS 271(a)	700
B-5298-S	Argonne National Laboratory	Se^{80}	BS 272(a)	700
B-5358-S*	Oak Ridge National Laboratory	Si^{28}	AI-AJ 103-106(a)	500
B-5366-S	Knolls Atomic Power Laboratory	Re^{185}	CP 356(a)	100
B-5367-S	Knolls Atomic Power Laboratory	Re^{187}	CP 357(a)	100
B-5290-S	University of California Radiation Laboratory	Ga^{71}	EI 555(a)	58
B-5289-S	University of California Radiation Laboratory	Ga^{69}	EI 554(a)	100
B-5303	University of Washington, Seattle	Ru^{96}	GJ 790(a)	50
B-5351	University of Michigan	Ru^{96}	GJ 790(a)	30
F-2252-T	Union of South Africa	Pb^{208}	CN 352(ar)	5
F-2251-T	Union of South Africa	Pb^{208}	BO 260(a)	6
F-2250-T	Union of South Africa	Pb^{206}	AQ 136(a)	4
B-5365-S*	Los Alamos Scientific Laboratory	Li^{7}	3 batches	174,000
B-5180-S	University of California Radiation Laboratory	B^{11}	FV 735(a)	80
B-5396	University of Illinois	Cu^{63}	FJ 673(a)	101
B-5399-S	Oak Ridge National Laboratory (Kahn)	Ca^{42}	FF 649(a)	20
B-5352	Rice Institute	Tl^{203}	BV 278(a)	106
B-5374	U.S. Department of Agriculture	K^{41}	EY 626(e)	200
B-5438-S	Argonne National Laboratory	K^{40}	GN 821(a)	10
B-4822-S	Argonne National Laboratory	Cr^{53}	GS 842(a)	100
B-5313-S	Knolls Atomic Power Laboratory	Sb^{121}	BT 274(a)	50
B-5314-S	Knolls Atomic Power Laboratory	Sb^{123}	AE 94(ar)	100
B-5315-S	Knolls Atomic Power Laboratory	Mo^{92}	FP 695(a)	100
B-5316-S	Knolls Atomic Power Laboratory	Mo^{94}	AW 164(a)	100

*Special services.

TABLE 21 (continued)

Request No.	Requester	Isotope	Lot	Quantity (mg)
B-5317-S	Knolls Atomic Power Laboratory	Mo^{95}	R-T 55(a)	100
B-5318-S	Knolls Atomic Power Laboratory	Mo^{96}	R-T56(a)	100
B-5319-S	Knolls Atomic Power Laboratory	Mo^{97}	R-T 57(ar)	100
B-5320-S	Knolls Atomic Power Laboratory	Mo^{98}	R-T 58(b)	100
B-5321-S	Knolls Atomic Power Laboratory	Mo^{100}	FP 701(a)	30
B-5322-S	Knolls Atomic Power Laboratory	In^{113}	DE 419(a)	300
B-5323-S	Knolls Atomic Power Laboratory	In^{115}	CO 355(a)	2,000
B-5324-S	Knolls Atomic Power Laboratory	Gd^{152}	GK 798(a)	70
B-5325-S	Knolls Atomic Power Laboratory	Gd^{154}	GK 799(a)	100
B-5326-S	Knolls Atomic Power Laboratory	Gd^{155}	GK 800(a)	100
B-5327-S	Knolls Atomic Power Laboratory	Gd^{156}	GK 801(a)	100
B-5328-S	Knolls Atomic Power Laboratory	Gd^{157}	GK 802(a)	100
B-5329-S	Knolls Atomic Power Laboratory	Gd^{158}	GK 803(a)	100
B-5330-S	Knolls Atomic Power Laboratory	Gd^{160}	GK 804(a)	100
B-5331-S	Knolls Atomic Power Laboratory	Ag^{107}	S-U 41(br)	100
B-5332-S	Knolls Atomic Power Laborotory	Ag^{109}	S-U 42(br)	100
B-5333-S	Knolls Atomic Power Laboratory	Ir^{191}	GL 810(a)	100
B-5334-S	Knolls Atomic Power Laboratory	Ir^{193}	GL 811(a)	100
B-5383	Princeton University	Ti^{46}	BF 215(a)	100
B-5384	Princeton University	Fe^{54}	FN 685(b)	100
B-5385	Princeton University	Ni^{58}	FJ 669(a)	100
B-5388	Princeton University	Ca^{42}	FF 649(a)	100
B-5387	Princeton University	Ca^{40}	FF 648(a)	100
B-5386	Princeton University	S^{34}	ES 598(a)	100
B-5389	Princeton University	Mg^{26}	BZ 290(a)	50
B-5382	Princeton University	Cr^{50}	GS 840(a)	100
B-5431-S	Oak Ridge National Laboratory	B^{10}	SS 866(a)	1,000
B-5433-S	Oak Ridge National Laboratory	Mo^{98}	FP 700(a)	540
B-5434-S	Oak Ridge National Laboratory	Zn^{70}	EK 560(a)	200
B-5432-S	Oak Ridge National Labaratory	Mo^{100}	FP 701(a)	100
B-4801-S	Los Alamos Scientific Laboratory	Cr^{53}	GS 842(a)	100
B-4684*	Naval Research Laboratory	B^{11}	SS 867(b)	1,082
B-5415-S	Brookhaven National Laboratory	In^{113}	CQ 358(a)	10
B-5426	Florida State University	Sn^{119}	EC 533(a)	300

*Special services.

TABLE 21 (continued)

Request No.	Requester	Isotope	Lot	Quantity (mg)
B-5309	Columbia Radiation Laboratory	Te^{124}	FE 643(a)	540
B-5436	University of Michigan	Ti^{49}	GA 755(a)	200
B-5466*	Princeton University	Pb^{208}	EO 584(a)	1,000
B-5405-S	University of California Radiation Laboratory	Hg^{198}	DR 486(a)	20
B-5406-S	University of California Radiation Laboratory	W^{180}	EL 561(a)	10
B-5407-S	University of California Radiation Laboratory	W^{182}	BG 221(a)	20
B-5408-S	University of California Radiation Laboratory	W^{184}	BG 223(a)	50
B-5409-S	University of California Radiation Laboratory	W^{186}	BG 224(a)	50
B-5493	Carnegie Institution of Washington	Ge^{70}	FC 747(a)	100
B-4492	Duke University	Ca^{44}	FO 692(a)	1,689
B-5403	Duke University	Cl^{35}	FW 736(a)	10,000
B-5035*	Stanford University	Ni^{58}	FJ 669(a)	2,407
B-5038*	Stanford University	Cu^{65}	GT 850(a)	2,486
B-5039*	Stanford University	Cu^{63}	GT 849(a)	2,505
B-5040*	Stanford University	Ni^{60}	FJ 670(a)	1,394
B-5041*	Stanford University	Li^{6}	FY 745(bd)	3,110
B-5043*	Stanford University	Pb^{206}	AQ 136(a)	200
B-5410*	Stanford University	Pb^{208}	CN 352(a)	207
B-5410*	Stanford University	Pb^{208}	BO 260(a)	150
B-5443	Washington University	Re^{185}	CP 356(a)	500
B-5470	Indiana University	Hg^{204}	DR 491(b)	92
B-5472*	Johns Hopkins University	Li^{6}	FY 745(bd)	270
B-5487-S	Knolls Atomic Power Laboratory	W^{180}	CL 340(ar)	50
B-5488-S	Knolls Atomic Power Laboratory	W^{182}	CL 341(a)	100
B-5489-S	Knolls Atomic Power Laboratory	W^{183}	BG 222(a)	100
B-5490-S	Knolls Atomic Power Laboratory	W^{184}	CL 343(a)	100
B-5491-S	Knolls Atomic Power Laboratory	W^{186}	CL 344(ar)	100
B-5509-S	University of California (LASL)	Nd^{150}	GI 789(a)	1,862
F-2307-T	JENER, Isotope Department	Te^{128}	CA 398(c)	25
F-2306-T	JENER, Isotope Department	Te^{130}	AU 160(a)	25
B-5404	Duke University	Cr^{54}	GR 839(c)	4,000
B-5401	Duke University	Cr^{52}	EU 610(a)	23,100
B-5402	Duke University	Cr^{50}	GS 840(a)	4,800
B-5462	Naval Research Laboratory	Ni^{60}	FJ 670(a)	100

*Special services.

TABLE 21 (continued)

Request No.	Requester	Isotope	Lot	Quantity (mg)
B-5463	Naval Research Laboratory	Ni^{58}	GT 844(a)	200
B-5473-S	Brookhaven National Laboratory	Hg^{196}	DR 485(a)	10
B-5482	University of Chicago	Li^{7}	GE 767(l)	500
B-5486	University of Wisconsin	Cd^{113}	CE 319(a)	15
B-5485	University of Wisconsin	Cd^{111}	CE 317(a)	50
B-4915	Columbia Radiation Laboratory	Rb^{87}	GX 863(a)	1,500
B-5161*	Westinghouse Electric Corp.	Te^{125}	CA 296(ar)	2,850
		Te^{125}	FE 644(a)	
B-5162*	Westinghouse Electric Corp.	Te^{126}	DX 510(a)	4,400
B-5162*	Westinghouse Electric Corp.	Te^{126}	FE 645(a)	3,250
B-5163*	Westinghouse Electric Corp.	Te^{128}	CA 298(a)	8,780
B-5163*	Westinghouse Electric Corp.	Te^{128}	DX 511(a)	5,750
B-5164*	Westinghouse Electric Corp.	Te^{130}	DX 512(a)	4,720
B-5164*	Westinghouse Electric Corp.	Te^{130}	FE 647(a)	3,400
B-5495	Phillips Petroleum Company	B^{10}	SS 866(a)	15,000
B-5536-S	Phillips Petroleum Company	Cu^{65}	DU 498(a)	20
B-5568-S*	Oak Ridge National Laboratory	Li^{6}	FY 745(bd)	500
B-5417	Naval Research Laboratory	Fe^{54}	FN 685(a)	6,000
B-5418	Naval Research Laboratory	Fe^{57}	DL 453(i)	2,500
B-5419	Naval Research Laboratary	Pb^{206}	EO 582(a)	2,100
B-5420	Naval Research Laboratory	Pb^{208}	FQ 705(a)	8,414
B-5421	Naval Research Laboratory	W^{182}	CL 341(a)	1,500
B-5423	Naval Research Laboratory	W^{184}	CL 343(ar)	2,500
B-5499-S	Brookhaven National Laboratory	Hf^{180}	GP 830(a)	25
B-5500-S	Brookhaven National Laboratory	Hf^{179}	GP 829(b)	50
B-5519*	Michigan State College	Li^{6}	FY 745(bd)	1,000
B-5520*	Michigan State College	Li^{7}	FI 668(i)	530
B-5537	Massachusetts Institute of Technology	Sm^{152}	FH 665(ar)	100
B-5538	Massachusetts Institute of Technology	Sm^{154}	FH 666(ar)	100
B-5539	Massachusetts Institute of Technology	Gd^{154}	GK 799(a)	100
B-5540	Massachusetts Institute of Technology	Gd^{156}	GK 801(a)	100
B-5541	Massachusetts Institute of Technology	Gd^{158}	GK 803(a)	100
B-5542	Massachusetts Institute of Technology	Sm^{148}	GM 815(a)	100
B-5543	Massachusetts Institute of Technology	Sm^{150}	FH 664(a)	100

*Special services.

TABLE 21 (continued)

Request No.	Requester	Isotope	Lot	Quantity (mg)
B-5544	Massachusetts Institute of Technology	Gd^{160}	GK 804(a)	100
B-5553-S	University of California (LASL)	Nd^{143}	GI 784(a)	2,000
B-5555-S	Oak Ridge National Laboratory	Mo^{92}	AW 163(a)	100
B-5556-S	Oak Ridge National Laboratory	Mo^{94}	AW 164(a)	60
B-5557-S	Oak Ridge National Laboratory	Mo^{95}	FP 697(b)	100
B-5558-S	Oak Ridge National Laboratory	Mo^{96}	R-T 56(a)	150
B-5559-S	Oak Ridge National Laboratory	Mo^{97}	FP 699(b)	100
B-5560-S	Oak Ridge National Laboratory	Mo^{98}	R-T 58(a)	150
B-5562-S	Oak Ridge National Laboratory	W^{180}	CL 340(a)	45
B-5563-S	Oak Ridge National Laboratory	W^{182}	EL 562(a)	80
B-5564-S	Oak Ridge National Laboratory	W^{183}	CL 342(a)	300
B-5565-S	Oak Ridge National Laboratory	W^{184}	BG 223(a)	235
B-5566-S	Oak Ridge National Laboratory	W^{186}	CL 344(a)	300
B-5589-S	Phillips Petroleum Company	Ta^{180}	GY 864(a)	1,700
B-5589-S	Phillips Petroleum Company	Ta^{180}	GY 864(d)	1,100
B-5597-S	Phillips Petroleum Company	Ti^{48}	EN 578(a)	1,000
B-5599-S	Phillips Petroleum Company	Nd^{143}	GI 784(a)	1,000
B-5600-S	Phillips Petroleum Company	Gd^{155}	GK 800(a)	1,000
B-5601-S	Phillips Petroleum Company	Sm^{147}	FH 661(a)	345

TABLE 22. DISTRIBUTION OF ISOTOPE SHIPMENTS FROM NOVEMBER 20, 1954 THROUGH MAY 20, 1955

Month	On Project	Off Project	Foreign	Total
November	2	7		9
December	21	19		40
January	26	20	5	51
February	11	30		41
March	11	9	3	23
April	41	28	2	71
May	23	32		55
Totals	135	145	10	290

TABLE 23. REQUESTS FOR ISOTOPES NOT APPROVED BY AEC

Allocation No.	Applicant	Isotope	Amount (mg)	Reason for AEC Withholding Approval	Status in Production Schedule
B-4489	Duke University	Ba^{134}	2,000	Availability of higher enrichment	
B-4487	Duke University	Ba^{136}	6,000	Availability of quantity and enrichment	
B-4488	Duke University	Ba^{137}	6,000	Availability of higher enrichment	
B-4491	Duke University	Ca^{42}	2,000–4,000	Awaiting chemical refinement of sample	Estimated completion, October 1955
B-4493	Duke University	Ca^{43}	1,000	Awaiting chemical refinement of sample	
B-3897	Yale University	Ca^{48}	100	Awaiting chemical refinement of sample	
B-4310	Washington University	Ca^{48}	100–1,000	Awaiting chemical refinement of sample	
B-4529	University of Michigan	Ca^{48}	500	Awaiting chemical refinement of sample	
B-4540-S	Argonne National Laboratory	Ca^{48}	50	Awaiting chemical refinement of sample	
B-4614	Massachusetts Institute of Technology	Ca^{48}	35–50	Awaiting chemical refinement of sample	
B-4779	University of California	Ca^{48}	500–1,000	Awaiting chemical refinement of sample	
B-5236-S	Brookhaven National Laboratary	Dy^{161}	2,000	Not now available	
B-5237-S	Brookhaven National Laboratory	Dy^{162}	2,000	Not now available	
B-5238-S	Brookhaven National Laboratory	Dy^{163}	2,000	Not now available	
B-5239-S	Brookhaven National Laboratory	Dy^{164}	2,000	Not now available	
B-5248-S	Argonne National Laboratory	Ge^{73}	700	Availability of quantity and quality	
B-5102-S	Brookhaven National Laboratory	Hf^{178}	2,000–5,000	Arrangement of fabrication procedures	
B-4553	Carnegie Institute of Technology	Li^{6}	50,000	Availability of quantity	
B-5345-S	Brookhaven National Laboratory	Li^{6}	20,000	Availability and additional information	
B-5400	Johns Hopkins University	Li^{6}	500–2,000	Additional information from applicant	
B-5414-S	Brookhaven National Laboratory	Li^{7}	3,000–10,000	Additional information from applicant	
B-5032	Massachusetts Institute of Technology	Mg^{25}	90	Additional information from applicant	

TABLE 23 (continued)

Allocation No.	Applicant	Isotope	Amount (mg)	Reason for AEC Withholding Approval	Status in Production Schedule
B-4285	University of Arkansas	Ni^{58}	1,000–3,000	Applicant clarifying re MTR radiation	
B-3780	Johns Hopkins University	Rb^{85}	350–700	Awaiting chemical refinement of sample	In process: estimated completion, August 1955
B-4470	Duke University	Rb^{87}	3,000–6,000	Awaiting chemical refinement of sample	
B-4812	Columbia University	Rb^{87}	10–30	Awaiting chemical refinement of sample	
B-5107	University of Chicago	Rb^{87}	10–20	Awaiting chemical refinement of sample	
B-5265	Carnegie Institution of Washington	Rb^{87}	30–50	Awaiting chemical refinement of sample	
B-4927	Ohio State University	Ru^{98}	50–100	Awaiting chemical refinement of sample	In process: estimated completion, August 1955
B-5125-S	Oak Ridge National Laboratory	Ru^{98}	75–100	Awaiting chemical refinement of sample	
B-4928	Ohio State University	Ru^{99}	50–100	Awaiting chemical refinement of sample	
B-5126-S	Oak Ridge National Laboratory	Ru^{99}	75–100	Awaiting chemical refinement of sample	
B-4929	Ohio State University	Ru^{100}	50–100	Awaiting chemical refinement of sample	
B-5127-S	Oak Ridge National Laboratory	Ru^{100}	75–100	Awaiting chemical refinement of sample	
B-4930	Ohio State University	Ru^{101}	50–100	Awaiting chemical refinement of sample	
B-5128-S	Oak Ridge National Laboratory	Ru^{101}	75–100	Awaiting chemical refinement of sample	
B-4218-S	Argonne National Laboratory	Ru^{104}	1–10	Awaiting chemical refinement of sample	
B-5113-S	Oak Ridge National Laboratory	Ru^{104}	75–100	Awaiting chemical refinement of sample	
B-5363-S	Argonne National Laboratory	Ru^{104}	10	Awaiting chemical refinement of sample	
B-4495	Duke University	Sr^{86}	4,000	Availability of quantity	Estimated schedule January 1956
B-4496	Duke University	Sr^{87}	4,000	Availability of quantity	
B-5250-S	Argonne National Laboratory	Sr^{87}	700	Availability of quantity	
B-4494	Duke University	Sr^{88}	10,000	Availability of larger quantities of Sr isotopes	
B-4603	Duke University	S^{33}	200	Availability of quantity and quality	

TABLE 23 (continued)

Allocation No.	Applicant	Isotope	Amount (mg)	Reason for AEC Withholding Approval	Status in Production Schedule
B-5308	Columbia University	Te^{123}	3,000	Not now available	In process in calutron
B-5310	Columbia University	Te^{125}	3,000	Not now available	In process in calutron
B-4469	Duke University	Tl^{203}	5,000–10,000	Availability of quantity	
B-5422	Naval Research Laboratory	W^{183}	3,100	Availability of quantity	
B-5424	Naval Research Laboratory	W^{186}	5,000	Availability of quantity	
B-4113	Carnegie Institution of Washington	V^{50}	200–500	Availability of quantity	

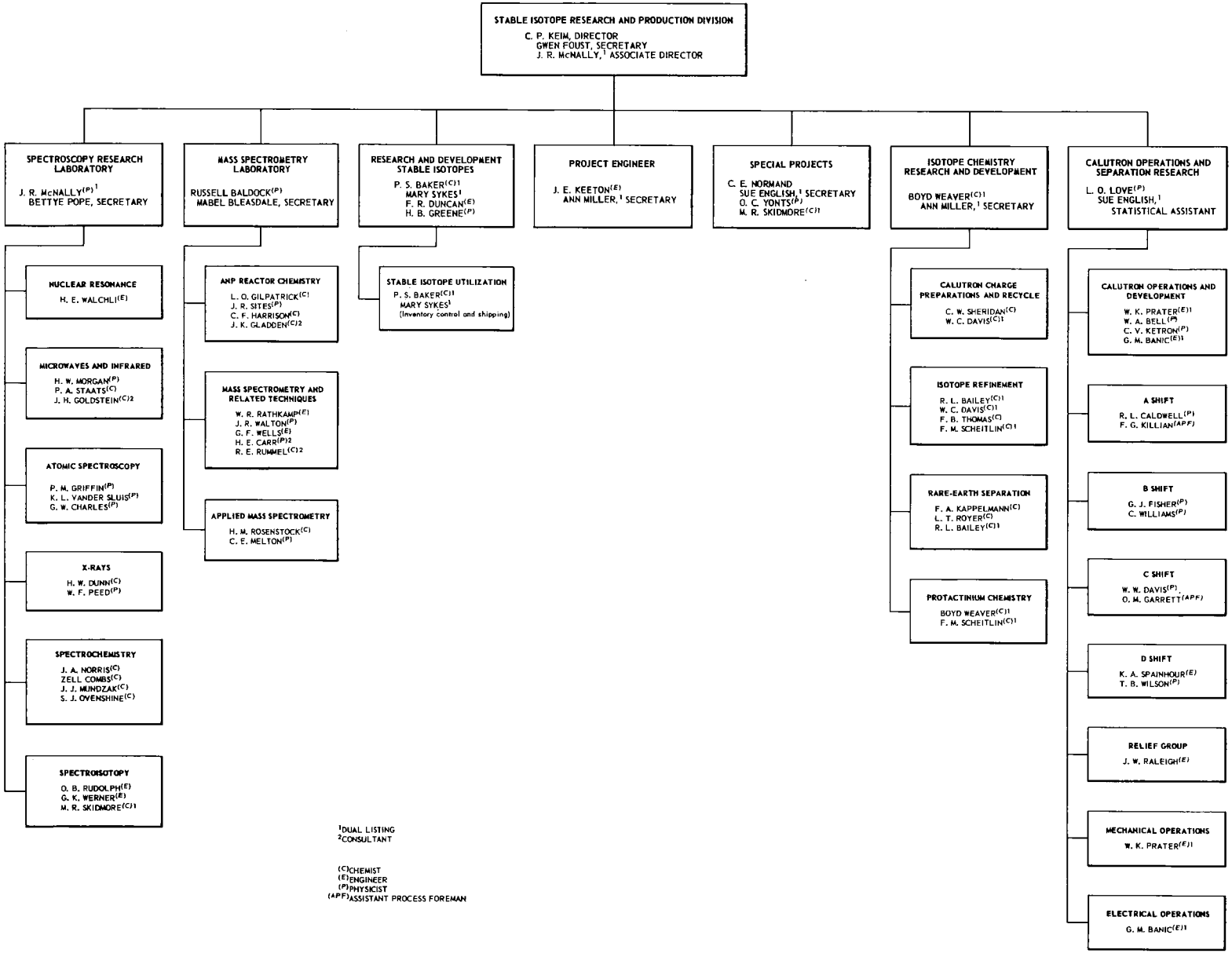
STABLE ISOTOPE RESEARCH AND PRODUCTION DIVISION
C. P. KEIM, DIRECTOR
GWEN FOUST, SECRETARY
J. R. McNALLY,[1] ASSOCIATE DIRECTOR
SPECTROSCOPY RESEARCH LABORATORY
J. R. McNALLY(P)[1]
BETTYE POPE, SECRETARY
NUCLEAR RESONANCE
H. E. WALCHLI(E)
MICROWAVES AND INFRARED
H. W. MORGAN(P)
P. A. STAATS(C)
J. H. GOLDSTEIN(C)2
ATOMIC SPECTROSCOPY
P. M. GRIFFIN(P)
K. L. VANDER SLUIS(P)
G. W. CHARLES(P)
X-RAYS
H. W. DUNN(C)
W. F. PEED(P)
SPECTROCHEMISTRY
J. A. NORRIS(C)
ZELL COMBS(C)
J. J. MUNDZAK(C)
S. J. OVENSHINE(C)
SPECTROISOTOPY
O. B. RUDOLPH(E)
G. K. WERNER(E)
M. R. SKIDMORE(C)1
MASS SPECTROMETRY LABORATORY
RUSSELL BALDOCK(P)
MABEL BLEASDALE, SECRETARY
ANP REACTOR CHEMISTRY
L. O. GILPATRICK(C)
J. R. SITES(P)
C. F. HARRISON(C)
J. K. GLADDEN(C)2
MASS SPECTROMETRY AND RELATED TECHNIQUES
W. R. RATHKAMP(E)
J. R. WALTON(P)
G. F. WELLS(E)
H. E. CARR(P)2
R. E. RUMMEL(C)2
APPLIED MASS SPECTROMETRY
H. M. ROSENSTOCK(C)
C. E. MELTON(P)
RESEARCH AND DEVELOPMENT STABLE ISOTOPES
P. S. BAKER(C)1
MARY SYKES[1]
F. R. DUNCAN(E)
H. B. GREENE(P)
STABLE ISOTOPE UTILIZATION
P. S. BAKER(C)1
MARY SYKES[1]
(Inventory control and shipping)
PROJECT ENGINEER
J. E. KEETON(E)
ANN MILLER,[1] SECRETARY
SPECIAL PROJECTS
C. E. NORMAND
SUE ENGLISH,[1] SECRETARY
O. C. YONTS(P)
M. R. SKIDMORE(C)1
ISOTOPE CHEMISTRY RESEARCH AND DEVELOPMENT
BOYD WEAVER(C)1
ANN MILLER,[1] SECRETARY
CALUTRON CHARGE PREPARATIONS AND RECYCLE
C. W. SHERIDAN(C)
W. C. DAVIS(C)1
ISOTOPE REFINEMENT
R. L. BAILEY(C)1
W. C. DAVIS(C)1
F. B. THOMAS(C)
F. M. SCHEITLIN(C)1
RARE-EARTH SEPARATION
F. A. KAPPELMANN(C)
L. T. ROYER(C)
R. L. BAILEY(C)1
PROTACTINIUM CHEMISTRY
BOYD WEAVER(C)1
F. M. SCHEITLIN(C)1
CALUTRON OPERATIONS AND SEPARATION RESEARCH
L. O. LOVE(P)
SUE ENGLISH,[1]
STATISTICAL ASSISTANT
CALUTRON OPERATIONS AND DEVELOPMENT
W. K. PRATER(E)1
W. A. BELL(P)
C. V. KETRON(P)
G. M. BANIC(E)1
A SHIFT
R. L. CALDWELL(P)
F. G. KILLIAN(APF)
B SHIFT
G. J. FISHER(P)
C. WILLIAMS(P)
C SHIFT
W. W. DAVIS(P)
O. M. GARRETT(APF)
D SHIFT
K. A. SPAINHOUR(E)
T. B. WILSON(P)
RELIEF GROUP
J. W. RALEIGH(E)
MECHANICAL OPERATIONS
W. K. PRATER(E)1
ELECTRICAL OPERATIONS
G. M. BANIC(E)1
[1]DUAL LISTING
[2]CONSULTANT
(C)CHEMIST
(E)ENGINEER
(P)PHYSICIST
(APF)ASSISTANT PROCESS FOREMAN