UNCLASSIFIED

MARTIN MARIETTA ENERGY SYSTEMS LIBRARIES
3 4456 0360987 9

CENTRAL RESEARCH LIBRARY
DOCUMENT COLLECTION

ORNL-1925
Physics

5

A MACHINE MULTIGROUP CALCULATION

The Eyewash Program for Univac

J. H. Alexander
N. D. Given

OAK RIDGE NATIONAL LABORATORY
CENTRAL RESEARCH LIBRARY
CIRCULATION SECTION
4500N ROOM 175
LIBRARY LOAN COPY
DO NOT TRANSFER TO ANOTHER PERSON
If you wish someone else to see this report, send in name with report and the library will arrange a loan.
UCN-7969 (3 9-77)

OAK RIDGE NATIONAL LABORATORY
OPERATED BY
UNION CARBIDE NUCLEAR COMPANY
A Division of Union Carbide and Carbon Corporation
UCC
POST OFFICE BOX P · OAK RIDGE, TENNESSEE

UNCLASSIFIED

UNCLASSIFIED

ORNL-1925

Copy No. 5

Contract No. W-7405-eng-26

MATHEMATICS PANEL

A MACHINE MULTIGROUP CALCULATION

The Eyewash Program for Univac

J. H. Alexander and N. D. Given

DATE ISSUED

SEP 6 1951

Contact
H. Goertzel
Brathwaite (on machine)

OAK RIDGE NATIONAL LABORATORY
Operated by
UNION CARBIDE NUCLEAR COMPANY
A Division of Union Carbide and Carbon Corporation
Post Office Box P
Oak Ridge, Tennessee

MARTIN MARIETTA ENERGY SYSTEMS LIBRARIES

3 4456 0360987 9

INTERNAL DISTRIBUTION

1. C. E. Center
2. Biology Library
3. Health Physics Library
4-5. Central Research Library
6. Reactor Experimental Engineering Library
7-11. Laboratory Records Department
12. Laboratory Records, ORNL R.C.
13. C. E. Larson
14. L. B. Emlet (K-25)
15. J. P. Murray (Y-12)
16. A. M. Weinberg
17. E. H. Taylor
18. E. D. Shipley
19. A. S. Householder
20. F. C. VonderLage
21. C. P. Keim
22. W. H. Jordan
23. J. A. Swartout
24. S. C. Lind
25. F. L. Culler
26. R. S. Livingston
27. A. H. Snell
28. A. Hollaender
29. M. T. Kelley
30. G. H. Clewett
31. J. H. Frye, Jr.
32. K. Z. Morgan
33. T. A. Lincoln
34. C. S. Harrill
35. D. W. Cardwell
36. C. E. Winters
37. E. M. King
38. Lewis Nelson
39. D. D. Cowen
40. J. A. Lane
41. R. A. Charpie
42. S. J. Cromer
43. M. J. Skinner
44. A. C. Downing
45-49. W. C. Sangren
50-54. J. H. Alexander
55-59. N. D. Given
60. R. R. Bate
61. W. E. Kinney
62. R. R. Coveyou
63. C. D. Zerby
64. R. K. Osborne
65. F. G. Prohammer
66. T. A. Welton
67. P. R. Kasten
68. W. K. Ergen
69. M. E. LaVerne
70. E. P. Blizard
71. A. Simon
72. R. B. Briggs
73. A. J. Miller
74. A. P. Fraas
75. A. M. Perry
76. ORNL Document Reference Library, Y-12 Branch

EXTERNAL DISTRIBUTION

77. R. F. Bacher, California Institute of Technology
78. Division of Research and Medicine, AEC, ORO
79. G. W. Anthony, Hanford, Washington
80. J. W. Benoit, Wright Air Development Center
81. Arnold Benton, Babcock and Wilcox Company
82. A. T. Biehl, University of California Radiation Laboratory, Livermore
83. Bengt Carlson, Los Alamos Scientific Laboratory
84. Jack Chernick, Brookhaven National Laboratory
85. M. P. Chinitz, Remington Rand, 315 Fourth Ave., New York, N.Y.
86. E. R. Cohen, North American Aviation, Inc.
87. M. C. Edlund, Babcock and Wilcox Company
88. Paul Gast, Hanford Operations Office
89. G. H. Goertzel, Nuclear Development Associates, Inc.

90. H. B. Goertzel, AEC Computing Facility, New York, N.Y.
91. J. F. Hall, Argonne National Laboratory
92. Donald Heiser, Bureau of the Census, Suitland, Maryland
93. A. F. Henry, Westinghouse Atomic Power Division, Pittsburgh
94. Celesta Hibbert, Knolls Atomic Power Laboratory
95. Henry Hurwitz, Knolls Atomic Power Laboratory
96. Herman Kahn, The Rand Corporation, Santa Monica, California
97. J. R. Lamarsh, Brookhaven National Laboratory
98. Henry McMurry, Phillips Petroleum Company
99. Fritz Metzgen, General Electric Company (ANPD)
100. B. J. Mezger, Curtiss-Wright Corporation, Clifton, N.J.
101. C. B. Mills, Crutiss-Wright Corporation, Clifton, N.J.
102. James Munier, Wright Air Development Center
103. D. G. Ott, Pratt & Whitney Aircraft Division
104. Harry Polachek, David Taylor Model Basin, Washington, D.C.
105. R. D. Richtmyer, AEC Computing Facility, New York, N.Y.
106. Richard Ross, Nuclear Development Associates, Inc.
107. R. B. Smith, Westinghouse Atomic Power Division, Pittsburgh
108. Bernard Spinrad, Argonne National Laboratory
109. Richard Stark, Knolls Atomic Power Laboratory
110. Don Steward, Argonne National Laboratory
111. J. J. Taylor, Westinghouse Atomic Power Division, Pittsburgh
112. J. E. Wilkins, Jr., Nuclear Development Associates, Inc.
113-421. Given distribution as shown in TID-4500 under Physics category

DISTRIBUTION PAGE TO BE REMOVED IF REPORT IS GIVEN PUBLIC DISTRIBUTION

TABLE OF CONTENTS

PAGE

I. Introduction 1

II. Statement of the Problem 2

A. Geometry

B. The diffusion equation

C. Multigroup equations

D. The finite difference equations

E. Boundary conditions

F. Solution of the W equation

G. Convergence criterion

H. Neutron balance

I. Normalization of the editted W_n/n

III. Summary of Symbols and Equations 20

IV. Description of the EYEWASH Program 29

V. Tables 31

A. Multigroup intervals

B. Thermal groups

C. Element Code

D. Fission Spectrum

VI. EYEWASH Operating Instructions 37

VII. Flow Charts 44

A. General

B. Constants

C. Source Generator

D. Iteration

VIII. Storage Assignments 48

A. Tape Lay-out

B. Constants

C. Source Generator

D. Iteration

INTRODUCTION

This report consists of a detailed description of the multigroup program used by ORNL on Univac. Its purpose is to supply information to two groups: to the programmers who run the program and who may be required to make changes to fit particular cases and to the physicists and engineers who wish to prepare data for the program or evaluate the results. The material in Sections II and III is essentially a description of the problem and the remainder is a description of the program itself. A supplement containing an annotated code edit, sample outputs, descriptions of scaling adjustments and a report of an auxiliary routine for changing cross-sections is also available.

The genealogy of Eyewash runs roughly as follows:

1) The IBM computations run at ORNL,
2) the R-2 program, which is a transliteration of 1) from IBM to Univac,
3) The Medusa program, which extends R-2 to nine regions, and
4) The Eyewash program, in which the cross-section averaging has been simplified (to cut down computation time) and the Goertzel-Selengut method for hydrogen scattering has been introduced.

SECTION II

STATEMENT OF THE PROBLEM

The formulation of the multigroup problem which is used in the Eyewash program is essentially the one presented in ORNL-1493, Appendix 6 by C. B. Mills. The only significant deviations occur in the averaging of cross-sections as noted below.

Geometry

The reactor is assumed to be a series of R_{Ω} ($\leqslant 9$) concentric spherical shells of homogeneous composition. The outer radius of the R'th region is $r = (\triangle r)\, B_R$ where $\triangle r$ is the unit of length (constant throughout the reactor) and B_R is an integer.

The Diffusion Equation

The equations solved by the program are finite difference approximations to the diffusion equation:

$$
\begin{aligned}
&- \left[\Sigma_{sH}(u, R) + \Sigma_a(u, \cancel{R}\, r)\right] \varphi(u, r)du + \frac{1}{3\Sigma_{tr}(u, \cancel{R}\, r)} \left[\frac{\partial^2 \varphi}{\partial r^2} + \frac{2}{r}\frac{\partial \varphi}{\partial r}\right] du \\
&+ \xi\, \Sigma_t(u, \cancel{R}\, r)\, \varphi(u, r) - \xi\, \Sigma_t(u + du, \cancel{R}\, r)\, \varphi(u + du, r) \qquad \text{(II.1)} \\
&+ du\, e^{-u} \int_0^u \Sigma_{sH}(u', R)\, \varphi(u', r) e^{u'} du' + \nu_c\, f(u) du \left[\int_0^{u_{th}} \Sigma_f\, \varphi(u', r) du + \bar{\Sigma}_f^{th}\, \varphi(r)\right] \\
&= 0 \quad .
\end{aligned}
$$

$$- \Sigma_a^{th}(R)\,\varphi^{th}(r) + \frac{1}{3\,\Sigma_{tr}^{th}(R)}\left[\frac{\partial^2 \varphi^{th}}{\partial r^2} + \frac{2}{r}\frac{\partial \varphi^{th}}{\partial r}\right] du + \xi\,\Sigma_t^{th}(R)\,\varphi(u^{th}, R)$$

$$+ e^{-u^{th}} \int_0^{u^{th}} \varphi(u')\,\Sigma_{sH}(u', R)\,e^{u'}\,du' = 0 \qquad (II.1^{th})$$

The definitions of the symbols are:

r	radius
u	lethargy
u^{th}	boundary lethargy of thermal group
R	region number
Σ_{sH}	macroscopic scattering cross-section for H
Σ_a	macroscopic absorption cross-section (including fission)
Σ_t	macroscopic total cross-section (excluding H)
Σ_f	macroscopic fission cross-section
Σ_{tr}	macroscopic transport cross-section
Σ^{th}	macroscopic thermal cross-section
$f(u)$	fission spectrum
$\varphi(u)$	flux per unit lethargy interval
φ^{th}	thermal flux
ν_c	the ν that would make the assembly critical.

Multigroup Equations

The range of lethargies is divided into the intervals listed in Table V.A. Some freedom is allowed in choosing the thermal level (cf. Table V.B). The boundaries of the lethargy intervals are denoted by u_i and the spacing by $U^i = u_i - u_{i-1}$. The transition to the multigroup equations is made by the following substitutions:

for	substitute
$\varphi(u, r)du$	$\bar{\varphi}^i U^i = \int_{u_{i-1}}^{u_i} \varphi(u)du$
$\varphi(u, r)$	$\varphi^{i-1}(r) = \varphi(u_{i-1}, r)$
$\varphi(u + du, r)$	$\varphi^i(r)$
$f(u)du$	$Z^i = \int_{u_{i-1}}^{u_i} f(u)du$
$-\Sigma_{sH}\varphi\, du + e^{-u}du \int_0^u \Sigma_{sH}\varphi\, e^{u'}du'$	$-e^{-u_i}(e^{u_i} - e^{u_{i-1}})\,\bar{\Sigma}^i_{sH,R}\,\bar{\varphi}^i(r) + (e^{-u_{i-1}} - e^{-u_i})\sum_{i'=1}^{i-1} \bar{\Sigma}^{i'}_{sH,R}\bar{\varphi}^{i'}(r)(e^{u_{i'}} - e^{u_{i'-1}})$.
$\Sigma(u, R)$	$\bar{\Sigma}^i_R$
$\xi\,\Sigma_t(u, R)$	$(\xi\,\Sigma_t^{i-1})_R = \xi\,\Sigma_t\,(u_{i-1}, R)$

$$\xi\Sigma_t(u + du, R) \qquad (\xi\Sigma_t^i)_R$$

$$\int_0^{u_{th}} \Sigma_f(u', R)\, \varphi(u',R)du' \qquad \sum_{i'=1}^{i} (\bar{\Sigma}_f^{i'})_R\, \bar{\varphi}^{i'}\, U^{i'} \quad .$$

These approximations are those of the cited report except that the various types of cross-sections are averaged independently.

Setting

$$\bar{\varphi}^i\,(r) \;=\; \frac{1}{2}(\varphi^i + \varphi^{i-1})$$

yields

$$- \left[(1 - e^{-U^i})\,\bar{\Sigma}_{sH}^i + \bar{\Sigma}_a^i\, U^i + 2\xi\Sigma_t^i\right] \bar{\varphi}^i(r) + \frac{U^i}{3\bar{\Sigma}_{tr}^i} \left[\frac{d^2\bar{\varphi}^i}{dr^2} + \frac{2}{r}\frac{d\bar{\varphi}^i}{dr}\right](r)$$

$$+ \left[\xi\Sigma_t^{i-1} + \xi\Sigma_t^i\right] \varphi^{i-1}(r) + \left[(e^{-u_{i-1}} - e^{-u_i}) \sum_{i'=1}^{i-1} \bar{\Sigma}_{sH}^{i'}\, \bar{\varphi}^{i'}(r)\, (e^{u_{i'}} - e^{u_{i'-1}})\right]$$

$$+ \nu_c\, Z_f^i \left[\sum_{i'=1}^{i} \bar{\Sigma}_f^{i'}\, \bar{\varphi}^{i'}(r)\, U^{i'} + \Sigma_f^{th}\, \bar{\varphi}^{th}(r)\right] = 0 \qquad \text{(II.2)}$$

$$\varphi^i \;=\; 2\,\bar{\varphi}^i \;-\; \varphi^{i-1} \qquad \text{(II.3)}$$

and for the thermal flux

$$-\Sigma_a^{th}\,\varphi^{th}(r) + \frac{1}{3\Sigma_{tr}^{th}}\left[\frac{d^2\varphi^{th}}{dr^2} + \frac{2}{r}\,\frac{d\varphi^{th}}{dr}\right] + \xi\,\Sigma_t^{i_\Omega}\,\varphi^{i_\Omega} + e^{-u_{i_\Omega}}\sum_{i'=1}^{i_\Omega}\bar{\Sigma}_{sH}^{i'}\,\bar{\varphi}^{i'}\,(e^{u_{i'}} - e^{u_{i-1}}) = 0 \qquad (II.2^{th})$$

where i_Ω is the index of the last fast group. The dependence of the cross-sections on the region index R is not shown.

<u>The Finite Difference Equations</u>

First we define $w^i(r) = r\,\bar{\varphi}^i(r)$ and $v^i(r) = r\,\varphi^i(r)$, which results in the usual simplification

$$\frac{d^2\bar{\varphi}^i}{dr^2} + \frac{2}{r}\,\frac{d\bar{\varphi}^i}{dr} = \frac{1}{r}\,\frac{d^2 w^i}{dr^2} \qquad (II.4)$$

$$v^i = 2w^i - v^{i-1} \quad .$$

Substituting the finite difference approximation

$$\frac{d^2 w^i}{dr^2}(r) = \frac{w^i(r+\triangle r) + w^i(r-\triangle r) - 2w^i(r)}{(\triangle r)^2}$$

in equation (II.2) gives

$$W^i_{n+1} + W^i_{n-1} - \left\{ 2 + (\triangle r)^2 \frac{\overline{3\Sigma}^i_{tr}}{U^i} \left[\bar{\Sigma}^i_a U^i + (1 - e^{-U^i}) \bar{\Sigma}^i_{sH} + 2\xi\Sigma^i_t \right] \right\} W^i_n$$

$$+ (\triangle r)^2 \frac{\overline{3\Sigma}^i_{tr}}{U^i} \left\{ (\xi \Sigma^{i-1}_t + \xi\Sigma^i_t) V^{i-1}_n + (e^{-u_{i-1}} - e^{-u_i}) \sum_{i=1}^{i-1} \bar{\Sigma}^{i'}_{sH} W^{i'}_n (e^{u_{i'}} - e^{u_{i'-1}}) \right.$$

$$\left. + \nu_c Z^i \left[\sum_{i'=1}^{i_\Omega} \bar{\Sigma}^{i'}_f W^{i'}_n U^{i'} + \Sigma^{th}_f W^{th}_n \right] \right\} = 0 \qquad \text{(II.5)}$$

$$V^i_n = 2W^i_n - V^{i-1}_n \quad ; \quad V^o = 0 \qquad \text{(II.6)}$$

and

$$W^{th}_{n+1} + W^{th}_{n-1} - \left[2 + (\triangle r)^2 3\Sigma^{th}_{tr} \Sigma^{th}_a \right] W^{th}_n + (\triangle r)^2 3\Sigma^{th}_{tr} \left[\xi\Sigma^{i_\Omega}_t V^{i_\Omega}_n + \right.$$

$$\left. + e^{-u_{i_\Omega}} \sum_{i'=1}^{i_\Omega} \bar{\Sigma}^{i'}_{sH} W^{i'}_n (e^{u_{i'}} - e^{u_{i'-1}}) \right] = 0 \qquad \text{(II.5)}^{th}$$

where $W_n = w(n\triangle r)$ and $V_n = v(n\triangle r)$.

The following definitions are introduced to simplify the appearance of the equations.

$$\left.\begin{aligned} k^i &= 2 + (\triangle r)^2 \frac{\overline{3\Sigma}^i_{tr}}{U_i} \left[m^{*i} + \bar{\Sigma}^i_a U^i + 2\xi\Sigma^i_t \right] \\ k^{th} &= 2 + (\triangle r)^2 3\Sigma^{th}_{tr} \Sigma^{th}_a \end{aligned}\right\} \qquad \text{(II.7)}$$

$$d^i = \frac{e^{-u_{i-1}} - e^{-u_i}}{e^{-u_{i-2}} - e^{-u_{i-1}}}$$

$$d^{th} = \frac{e^{-u_{i_\Omega}}}{e^{-u_{i_\Omega - 1}} - e^{-u_{i_\Omega}}}$$

Not R-dependent

$$m^{*i} = (1 - e^{-U^i})\,\bar{\Sigma}^i_{sH}$$

$$m^{*th} = Q^{th} = 0$$

$$Q^i = (e^{U^i} + e^{-U^i} - 2)\,\bar{\Sigma}^i_{sH}$$

$$T^i_n = (e^{-u_{i-1}} - e^{-u_i}) \sum_{i'=1}^{i-1} \bar{\Sigma}^{i'}_{sH}\, W^{i'}_n\, (e^{u_{i'}} - e^{u_{i'-1}})$$

$$T^{th}_n = e^{-u_{i_\Omega}} \sum_{i'=1}^{i_\Omega} \bar{\Sigma}^{i'}_{sH}\, W^{i'}_n (e^{u_{i'}} - e^{u_{i'-1}})$$

$$S_n = \nu_c \left[\sum_{i'=1}^{i_\Omega} \bar{\Sigma}^{i'}_f\, W^{i'}_n\, U^{i'} + \Sigma^{th}_f\, W^{th}_n \right]$$

$$C^i_n = (\triangle r)^2\, \frac{\overline{3\Sigma}^i_{tr}}{U^i} \left[(\xi\Sigma^{i-1}_t + \xi\Sigma^i_t)\, V^{i-1}_n + T^i_n + Z^i\, S_n \right]$$

$$C^{th}_n = (\triangle r)^2\, 3\Sigma^{th}_{tr} \left[\xi\Sigma^{i_\Omega}_t\, V^{i_\Omega}_n + T^{th}_n \right] .$$

(II.7)

Equations (II.5) and (II.6) then look as follows:

$$\left.\begin{aligned}
&T_n^i = d^i\, T_n^{*\,i-1} \quad ; \qquad T_n^{*\,o} = 0 \\
&W_{n+1}^i + W_{n-1}^i - k^i\, W_n^i + C_n^i = 0 \\
&V_n^i = 2W_n^i - V_n^{i-1} \quad ; \qquad V_n^o = 0 \\
&T_n^{*\,i} = Q^i\, W_n^i + T_n^i
\end{aligned}\right\} \qquad \text{(II.8)}$$

$$\left.\begin{aligned}
&T_n^{th} = d^{th}\, T_n^{*\,i_\Omega} \\
&W_{n+1}^{th} + W_{n-1}^{th} - k^{th}\, W_n^{th} + C_n^{th} = 0
\end{aligned}\right\} \qquad \text{(II.8}^{th}\text{)}$$

The equations are written in the order in which they may be evaluated numerically. The quantity T^* is not defined explicitly, being merely an intermediate result in the computation of T which satisfies the equation

$$T_n^i = d^i\, (Q^{i-1}\, W_n^{i-1} + T_n^{i-1}) \quad .$$

d^i and Q^i are defined in a manner which keeps the sizes of the quantities reasonably close to one.

Boundary Conditions

Eyewash solves equations (II.7) and (II.8) for ν_c subject to the usual boundary conditions, viz., in terms of φ ,

a) φ is continuous, and

b) $\frac{1}{3\Sigma_{tr}} \frac{\partial\varphi}{\partial r}$ continuous .

As mentioned before, the outer boundary of the R'th region is $B_R \triangle r$. Condition a) becomes simply: W_{B_R} is the same for regions R and R + 1 , $W_{B_\Omega} = 0$.

As for Condition b) we approximate $\frac{1}{3\Sigma_{tr}} \frac{\partial\varphi}{\partial r}$ by $\frac{1}{3\overline{\Sigma}^i_{tr}} \frac{d\overline{\varphi}^i}{dr}$ and further assume that

$$\frac{d\overline{\varphi}^i}{dr} = \left[\frac{1}{r}\frac{dw}{dr} - \frac{1}{r^2} w\right] = \frac{1}{n\triangle r}\left\{\frac{W_{n+1} - W_{n-1}}{2\triangle r} + \frac{1}{n\triangle r}\left[\frac{1}{3} W_n - \frac{1}{6}(W_{n+1} + W_{n-1})\right]\right\} - \frac{W_n}{(n\triangle r)^2} \tag{II.9}$$

$$= \frac{1}{(n\triangle r)^2}\left[\frac{2}{3} W_n + \frac{1}{6}(W_{n+1} + W_{n-1}) - \frac{n}{2}(W_{n+1} - W_{n-1})\right]$$

where $r = n \triangle r$.

Since this equation is to be applied at the boundary $n = B_R$ of region R and since W_{B_R+1} is calculated only for region $R + 1$, equation (II.8) is used to extrapolate across the boundary. Then the boundary condition becomes

$$\left.\begin{aligned} & W^i_{B+1} + W^i_{B-1} - K^i_R W^i_B + \mathscr{C}^i_B = 0 \\ & \text{where} \\ & K^i_R = \frac{1}{2}\left[k^i_{R+1}\left(1 + \frac{1}{3B}\right) + \frac{k^i_R}{h^i_R}\left(1 - \frac{1}{3B}\right)\right] + \frac{2}{3B}\left(1 - \frac{1}{h^i_R}\right) \\ & \mathscr{C}^i_B = \frac{1}{2}\left[C^i_{B,R+1}\left(1 + \frac{1}{3B}\right) + \frac{C^i_{B,R}}{h^i_R}\left(1 - \frac{1}{3B}\right)\right] \\ & h^i_R = \frac{\overline{3\Sigma}^i_{tr,R}}{\overline{3\Sigma}^i_{tr,R+1}} \quad . \end{aligned}\right\} \quad \text{(II.10)}$$

For the thermal group, replace "i" in (II.10) by "th".

<u>Solution of the W equation</u>

The equations for W which must be solved are

$$W_{n+1} + W_{n-1} - k_R W_n + C_n = 0 \qquad \text{(II.8)}$$

for points not on boundaries

and

$$W_{B+1} + W_{B-1} - K_R W_B + \mathscr{C}_B = 0 \qquad \text{(II.10)}$$

for boundary points. These equations are subject to the additional boundary conditions

$$W_o = W_{B_\sim} = 0 \quad .$$

The method of solution is to solve the following system of equations;

$$A^*_o = 0 \; ; \qquad A^*_1 = .005$$

$$A^*_{n+1} = A^*_n + \left(\frac{1}{\alpha_R}\right)^2 (A^*_n - A^*_{n-1})$$

$$A^*_{B_R+1} = (K_R/\alpha_R) \; A^*_{B_R} - \frac{1}{h_R \, \alpha_R \, \alpha_{R+1}} A^*_{B_R-1}$$

where

$$\alpha_R = \frac{k_R + \sqrt{k_R^2 - 4}}{2} \quad , \quad \frac{1}{\alpha_R^2} = \frac{k_R}{\alpha_R} - 1 \quad ,$$

$$P_o = 0$$

$$P_n = (P_{n-1}/\alpha_R) + C_n A^*_n$$

$$P_{B_R} = (1/\alpha_R h_R) P_{B_R-1} + \sigma_{B_R} A^*_{B_R}$$

$$W_{B_\Omega} = 0$$

$$W_n = \left[A^*_n W_{n+1} + P_n\right] / \alpha_R A^*_{n+1}$$

$$W_{B_R} = \left[A^*_{B_R} W_{B_R+1} + P_{B_R}\right] / \alpha_{R+1} A^*_{B_R+1} \quad .$$

The A^*'s and P's are computed for increasing n and the W's are then computed for decreasing n, beginning with $n = B_\Omega$.

Convergence Criterion

The following procedure is used to calculate the stationary flux distribution.

1) An initial estimate is made of the rate $S(r)/r$ of generation of neutrons/cm^3 sec. The estimate which is made is, in finite difference terms,

$$S(n \triangle r) = S_n = n$$

at all points in regions containing fissionable material. Thus $S(r)/r = S_n/n(\triangle r) = 1/(\triangle r)$, initially. The total number of neutrons generated throughout the reactor per sec. is

$$\int_0^{\triangle r} \sum_{R=1}^{R_\Omega} 4\pi r^2 \frac{S(r)}{r} dr = 4\pi (\triangle r)^2 \int_0^{B_R} n S_n \, dn$$

$$\approx 4\pi (\triangle r)^2 \sum_{R=1}^{R_\Omega} \left\{ \left[\sum_{n=B_{R-1}}^{B_R} n S_n \right] - \left(\frac{B_R}{2} + \frac{1}{6}\right) S_{B_R} - \left(\frac{B_R}{2} - \frac{1}{6}\right) S_{B_{R-1}} \right\} Z_R^*$$

$$= \frac{4\pi}{3} (\triangle r)^2 \sum_{R=1}^{R_\Omega} \left[B_R^3 - B_{R-1}^3 \right] Z_R^*$$

where $Z_R^* = 1$ or 0 depending on whether or not region R contains fissionable material. We define

$$z = \frac{3}{\sum \left[B_R^3 - B_{R-1}^3 \right] Z_R^*} \qquad \text{(II.11)}$$

so

$$\int_0^{\triangle r} \sum_{R=1}^{R_\Omega} 4\pi r^2 \frac{S(r)}{r} dr \approx \frac{4\pi (\triangle r)^2}{z} .$$

2) The estimated S_n is substituted for $\nu_c \left[\sum_{i'=1}^{i_\Omega} \bar{\Sigma}_f^i W_n^i U^i + \Sigma_f^{th} W_n^{th} \right]$ in equations (II.7) and then equations (II.8) and (II.10) are solved for W_n^i.

3) The W_n's calculated in step 2) are used to calculate the rate at which fissions occur by

$$s_n = \left[\sum_{i'=1}^{i_\Omega} \bar{\Sigma}_f^{i'} W_n^{i'} U^{i'} + \Sigma_f^{th} W_n^{th} \right] . \qquad \text{(II.12)}$$

4) Next ν_c, the ν required to maintain the original power level, is calculated by

$$\nu_c = 1/ \left[z \sum_{R=1}^{R_\Omega} \left\{ \sum_{n=B_{R-1}}^{B_R} n\, s_n - \left(\frac{B_R}{2} + \frac{1}{6}\right) s_{B_R} - \left(\frac{B_{R-1}}{2} - \frac{1}{6}\right) s_{B_{R-1}} \right\} \right] .$$

The procedure used to arrive at ν_c is not so direct as indicated. The equations actually used are:

$$z\, Y_R^i = z \left[\sum_{n=B_{R-1}}^{B_R} n\, W_n^i - \left(\frac{B_R}{2} + \frac{1}{6}\right) W_{B_R}^i - \left(\frac{B_{R-1}}{2} - \frac{1}{6}\right) W_{B_{R-1}}^i \right] \qquad \text{(II.13)}$$

($z\, Y_R^i\, U^i$ is the total flux in the i'th group and R'th region per source neutron.)

$$F^i = \sum_{R=1}^{R_\Omega} U^i\, \bar{\Sigma}_f^i\, (z\, Y_R^i) \qquad \text{(II.14)}$$

F^i = number of fissions in i'th group per source neutron.

$$\nu_c = 1/\left[\sum_{i=1}^{i_\Omega} F^i + F^{th}\right] . \qquad \text{(II.15)}$$

At this point we also compute

$$A_R^i = z\, Y_R^i\, U^i\, \bar{\Sigma}_a^i \qquad \text{(II.16)}$$

which is the number of absorptions (including fission) occuring in (i, R) per source neutron. This quantity is tabulated, and is also used for checking neutron balance.

5) A new source S_n' is computed next.

$$S_n' = \nu_c\, s_n . \qquad \text{(II.17)}$$

The new source is checked against the old, and if

$$\left| S_n' - S_n \right| < \epsilon$$

(ϵ=.1 in program) for all n then the flux is decreed to be stationary. Otherwise S_n is replaced by S_n' and the calculation is repeated beginning over at step 2).

6) If the convergence criterion is satisfied, ν_c is recalculated using the same fluxes except that $i_\wedge - 1$ is used as the lowest fast group. Both these ν_c's appear in the tabulation.

7) The neutron balance is checked as indicated in the following paragraph.

Neutron Balance

As already defined, (cf. II.16), A_R^i is the number of neutrons absorbed in group i per source neutron. E_R^i is defined to be the number of neutrons in group i per source neutron that escape from region R to $R + 1$. We should then have

$$BAL \equiv \sum_{i,R} A_R^i + \sum_i E_{R_\wedge}^i = 1 \quad .$$

As usual, $J(u, r) = -(1/3\Sigma_{tr}) \dfrac{\partial\varphi(u, r)}{\partial r}$, and

$$\int_{u_{i-1}}^{u_i} J(u, r)du \approx - (1/\overline{3\Sigma}_{tr}^i)\, U^i \frac{d\bar{\varphi}^i(r)}{dr}$$

$$= \frac{U^i}{\overline{3\Sigma}_{tr}^i} \cdot \frac{1}{n^2 \triangle r} \left[\frac{2}{3} W_n + \frac{1}{6}(W_{n+1} + W_{n-1}) - \right.$$

$$\left. - \frac{n}{2} (W_{n+1} - W_{n-1}) \right] , \quad \text{(cf. II.9).}$$

Integrating over the entire spherical surface of radius $r = n \triangle r$ and dividing by the number of source neutrons gives us

$$E_n^i = \frac{4\pi (n \triangle r)^2 \int_{u_{i-1}}^{u_i} J(u, r)du}{\int_0^{\triangle r B_\Omega} 4\pi r^2 \frac{S(r)}{r} dr}$$

$$\approx \frac{4\pi (n \triangle r)^2}{(4\pi(\triangle r)^2/z)} \frac{U^i}{3\overline{\Sigma}_{tr}^i} \cdot \frac{1}{(n\triangle r)^2} \left[\frac{2}{3} W_n \cdots\right]$$

$$E_n^i = \frac{z\, U^i}{(\triangle r)^2 (3\overline{\Sigma}_{tr}^i)} \cdot \left[\frac{2}{3} W_n + \frac{1}{6}(W_{n+1} + W_{n-1}) - \frac{n}{2}(W_{n+1} - W_{n-1})\right] \qquad \text{(II.18)}$$

Our equation for E_n^i holds for points interior to some region. To evaluate it at the boundary requires extrapolation, for which (II.8) is used. This gives

$$E_{B_\Omega}^i = \frac{z\, U^i}{(\triangle r)^2\ 3\overline{\Sigma}_{tr}^i} \cdot B_\Omega\ W_{B_\Omega -1}^i \qquad \text{(II.19)}$$

at the outside boundary

and at interfaces

$$E_B^i = \frac{z\,U^i}{(\Delta r)^2\,3\bar{\Sigma}_{tr}^i}\left\{\left[\left(\frac{B}{2}+\frac{1}{6}\right)k+\frac{2}{3}\right]W_B - BW_{B+1} - \left(\frac{B}{2}+\frac{1}{6}\right)C_B\right\} \qquad \text{(II.20)}$$

where k , C_B are evaluated in the region outside of the interface.

Normalization of the Edited W_n/n

The foregoing description might lead one to believe that the quantities labelled "W_n/n" on the printed output are values of the neutron flux when $\nu = \nu_c$ and at a power level corresponding to one fission neutron being born per second per cm^3 of fissionable material. Tradition demands that the standard power level be 5 neutrons/sec cm^3 so it is actually $5W_n/n$ that is printed. (Cf. definition of W_n in Section III.)

.005

Power level is $5\left(\frac{z}{.001}\right)$ neutrons/sec cm^3 as far as flux print-out is concerned where z is the typed-in source scale factor.

SECTION III

SUMMARY OF SYMBOLS AND EQUATIONS

Symbols

f Self-shielding factor $f = 1 - L\left[N_{00}(\bar{\sigma}_a)_{00} + N_{01}(\bar{\sigma}_a)_{01}\right]$ where $f\,N_{00}$ replaces N_{00} and fN_{01} replaces N_{01} in cross-section averages.

i Group; highest lethargy level of group i. (cf. Tables V.A and V.B).

j_R Number of materials in region R.

jj Two digit position number assigned to each material. (cf. Table V.C).

$jj = 26$ Hydrogen.

n Space point.

t Thickness of fuel plate.

th-i Thermal group associated with highest lethargy of i'th fast group.

u Lethargy $u = 10^7(ev)/E(ev)$, (cf. Table A).

x Source dependent scale factor.

z Normalization factor.

A^{*i}_n Solution of the homogeneous part of the neutron flux equation.

A^i_R Neutron absorption in the R'th region, i'th group.

B_R Outside boundary of region R.

C^i_n Source term for group i, n'th space point. Note: when $n = B_R$, compute C_B and C'_B since space point B has a source in region R and $R + 1$.

E_R^i Neutron escape across the outer boundary of region R , i'th group.

F^i Neutron fission in i'th group.

L_R Self-shielding component in region R .

$$L_R = \left[\frac{.321 \text{ x thickness of fuel plate}}{\text{Volume fraction of fuel plates}}\right]_R .$$

$N_{jj,R}$ Concentration (atomic density) of material jj in region R . When jj refers to an alloy, the concentration is represented by the volume fraction.

P_n^i Auxiliary function used in neutron flux calculation.

R Region.

S_n n times the fission neutron source at space point n .

T_n^i Hydrogen scattering source for group i , n'th space point.

U^i Width of i'th lethargy group (cf. Table V.A).

$$U^i = u^i - u^{i-1} \qquad U^{th} = 1.0$$

V_n^i Neutron flux at highest lethargy of group i .

W_n^i n/5 x neutron flux at space point n for group i .

Z^i Fraction of fission neutrons born in the i'th lethargy group. (cf. Table V.D).

Z_R^* Fissionable regions indicator. (cf. Format in Section VI.)

ϵ Convergence criterion.

ν_c Number of neutrons per fission required for criticality.

$\left[\xi\sigma_t\right]^i_{jj}$ Microscopic total cross-section of material jj at highest lethargy level of group i . Note: $jj = 26$, $\xi\sigma_t = 0$.

$\left[\bar{\sigma}\right]^i_{jj}$ Average microscopic cross-section of material jj for group i of the following types:

$\bar{\sigma}_a$	Absorption
$\overline{3\sigma}_{tr}$	Transport
$\bar{\sigma}_s$	Scattering: jj = 26 = Hydrogen
$\bar{\sigma}_f$	Fission.

$\triangle r$ Integration step [cm] .

$\left[\xi\Sigma_t\right]^i_R$ Macroscopic total cross-section for region R at highest lethargy of group i .

$\left[\bar{\Sigma}\right]^i_R$ Macroscopic average cross-section for region R , group i of same types as listed under $\bar{\sigma}$.

$\cap$ Subscript denoting maximum. Example: $B_\cap$ boundary of outside region.

Summary of Equations

Indices of i , n and R have been included only when their assignment is not obvious.

Cross-Sections:

Each i , R :

$$\xi\Sigma_t = N_{j_1}(\xi\sigma_t)_{j_1} + N_{j_2}(\xi\sigma_t)_{j_2} + \cdots + N_{j_n}(\xi\sigma_t)_{j_n}$$

$$\bar{\Sigma}_a = N_{j_1}(\bar{\sigma}_a)_{j_1} + N_{j_2}(\bar{\sigma}_a)_{j_2} + \cdots + N_{j_n}(\bar{\sigma}_a)_{j_n}$$

$$\overline{3\Sigma}_{tr} = N_{j_1}(\overline{3\sigma}_{tr})_{j_1} + N_{j_2}(\overline{3\sigma}_{tr})_{j_2} + \cdots + N_{j_n}(\overline{3\sigma}_{tr})_{j_n}$$

$$\bar{\Sigma}_f = N_{j_1}(\bar{\sigma}_f)_{j_1} + N_{j_2}(\bar{\sigma}_f)_{j_2} + \cdots + N_{j_n}(\bar{\sigma}_f)_{j_n}$$

$$Q = N_{26}\,H \quad \text{where} \quad H = (e^{U} + e^{-U} - 2)(\bar{\sigma}_s)_{26}$$

$$m^* = N_{26}\,H^* \quad \text{where} \quad H^* = (1 - e^{-U})(\bar{\sigma}_s)_{26}$$

$$Q^{th} = m^{*th} = 0$$

Constants :

Each i :

$$d = \frac{e^{-u_{i-1}} - e^{-u_i}}{e^{-u_{i-2}} - e^{-u_{i-1}}}$$

$$d^{th} = \frac{e^{-u_i}}{e^{-u_{i-1}} - e^{-u_i}}$$

Each i, R:

$$k = (2\xi \Sigma_t + U \bar{\Sigma}_a + m^*) \left[\frac{(\triangle r)^2 \; \overline{3\Sigma}_{tr}}{U} \right] + 2$$

$$1/\alpha = \frac{1}{k/2 + \sqrt{(k/2)^2 - 1}}$$

$$1/\alpha^2 = \frac{k - \alpha}{\alpha}$$

i = th

$$k = \left[\Sigma_a (\triangle r)^2 \, 3\Sigma_{tr} \right] + 2$$

$\xi\Sigma_t$ replaces $\xi\Sigma_t^{i-1} + \xi\Sigma_t^i$ in C_n (Iteration) .

Boundary crossing constants $B = B_{R-1}$

$$\frac{1}{h} = \frac{(3\overline{\Sigma}_{tr})_R}{(3\overline{\Sigma}_{tr})_{R-1}}$$

$$\frac{1}{h\,\alpha\,\alpha'} = \left(\frac{1}{h}\right)\left(\frac{1}{\alpha_R}\right)\left(\frac{1}{\alpha_{R-1}}\right)$$

$$\frac{K}{\alpha} = \frac{k_R}{\alpha_R}\left(\frac{1}{2} + \frac{1}{6B}\right) + \frac{2}{3B}\left(\frac{1}{\alpha_R}\right)\left(1 - \frac{1}{h}\right) + k_{R-1}\left(\frac{1}{\alpha_R}\right)\left(\frac{1}{h}\right)\left(\frac{1}{2} - \frac{1}{6B}\right) \quad .$$

<u>Source Generator:</u>

$$S_n = x\,n\,Z_R^*$$

$$z = \frac{3}{x\,\Sigma(B_R^3 - B_{R-1}^3)\,Z_R^*}$$

<u>Iteration</u> :

Outward:

$$A_o^* = 0$$

$$A_1^* = .005$$

$$A_{n+1}^* = A_n^* + \frac{1}{\alpha^2}(A_n^* - A_{n-1}^*)$$

$$C_n = \left[V^{i-1} \left(\xi \Sigma_t^{i-1} + \xi \Sigma_t^{i} \right) + Z\, S_n + T \right] \left[\frac{\overline{3\Sigma}_{tr} \left(\triangle r \right)^2}{U} \right]$$

where $T = dT^{*i-1}$

$T^{th} = d^{th}\, T^*$

$T^{*o} = V^o = 0$; V^{i-1} and T^* are computed on the inward route.

$$P_o = 0$$

$$P_n = P_{n-1} \left(\frac{1}{\alpha} \right) + C_n A_n^*$$

$n = B_R$

$$P_B = P_{B-1} \left(\frac{1}{\alpha_R} \right) \left(\frac{1}{h} \right) + \frac{1}{2} \left[C_B \left(\frac{1}{h} \right) \left(1 - \frac{1}{3B} \right) + C_B' \left(1 + \frac{1}{3B} \right) \right] A_B^*$$

where C_B is calculated using S_B in region R and C_B' is calculated using S_B in region $R + 1$.

$n = B_R + 1$

$$A_{B+1}^* = \left(\frac{K}{\alpha} \right) A_B^* - \left(\frac{1}{h\, \alpha'\, \alpha} \right)_B A_{B-1}^* \quad .$$

Inward:

$$V = 2W - V^{i-1}$$

$$T^* = Q\,W + T$$

$$W_n = \frac{1}{\alpha\, A^*_{n+1}} \left[A^*_n\, W_{n+1} + P_n \right]$$

Each i , R:

$$zY = \left[\sum_n n\, W_n - \left(\frac{B_R}{2} + \frac{1}{6}\right) W_{B_R} - \left(\frac{B_{R-1}}{2} - \frac{1}{6}\right) W_{B_{R-1}} \right] z$$

$$A = (U\,\overline{\Sigma}_a)(z\,Y)$$

$B = B_R$:

$$zY^* = \left\{ \left[\left(\frac{B}{2} + \frac{1}{6}\right) k_{R+1} + \frac{2}{3} \right] W_B - B\, W_{B+1} - \left(\frac{B}{2} + \frac{1}{6}\right)(C'_B)_{R+1} \right\} z$$

$R = R_{\Omega}$

$$zY^* = B(W_{B-1})z$$

$$E = zY^* + \left[\frac{(\triangle r)^2\, \overline{3\Sigma}_{tr}}{U} \right]$$

Each i :

$$F = \sum_{R} (U \bar{\Sigma}_f) (zY)$$

Each iteration:

$$\nu_c = \frac{1}{\sum_i F}$$

$$BAL = \sum_i E_{R_{\sim}} + \sum_{i,R} A$$

Each n :

$$s = \sum_i W (U \bar{\Sigma}_f)$$

$$S = \nu_c s$$

SECTION IV

DESCRIPTION OF THE EYEWASH PROGRAM

The Eyewash program is divided into seven parts which are read into the machine in sequence. Parts 2, 3 and 4 are the computational items and are represented in detail in this report. The other sections handle the editing of the output values.

When section 2 takes over the calculation, the data describing the reactor is in the memory of the machine. The program then computes the macroscopic cross-sections and group constants, one group at a time, all regions. Proceeding from one group to the next, the program continues until the desired thermal level is reached. These group constants are stored on Tape 3 at the rate of one block per region per group. (See Storage Table VIII.A).

In Part 3, a flat source is generated for each space point within each fissionable region. The inner boundary points are considered to be located in two regions and therefore are duplicated.

Using the Part 3 results as a first guess, the calculation then proceeds to Part 4 which is the iterative part. Starting with group one, the program moves through increasing n, computing A^*, P, C and T and then through decreasing n computing W, A, E, F and T^*. Group one is followed by group two and so on until the thermal level is reached. ν_c is then printed by the supervisory control typewriter. A new source is computed and at each

point its value is compared with the corresponding value of the source used in the last iteration. If none of these sources differs by more than ϵ , the computation is converged and the program moves on to edit the results of the final iteration. To make the results more complete and to aid in determining reactivity coefficients, the computations are also made for the thermal group one level lower than that selected for the iterative base, but they do not enter into the criterion for convergence.

The basic edited output has been designed to give a summary of the input, the source distribution, the total fissions in all groups, the absorptions in all regions, all groups and the escapes from all regions, all groups. In addition to this, there are options on editing the averaged cross-sections and the final neutron flux.

SECTION V

TABLES

Table A

Univac Multigroup Intervals

GROUP	LETHARGY LIMITS	GROUP WIDTH	~E LIMITS ENERGY LIMITS, ELECTRON VOLTS
1	0-.5	.5	10^7 -6.065 x 10^6
2	.5-1.0	.5	6.065 x 10^6-3.679 x 10^6
3	1.0-1.5	.5	3.679 x 10^6-2.231 x 10^6
4	1.5-2.0	.5	2.231 x 10^6-1.353 x 10^6
5	2.0-2.5	.5	1.353 x 10^6-.8208 x 10^6
6	2.5-4.0	1.5	.8208 x 10^6-.1832 x 10^6
7	4.0-7.0	3.0	.1832 x 10^6-.009118 x 10^6
8	7.0-10.0	3.0	9118-454.0
9	10.0-11.4	1.4	454.0-112.0
10	11.4-12.6	1.2	112.0-33.72
11	12.6-13.4	.8	33.72-15.15
12	13.4-13.8	.4	15.15-10.16
13	13.8-14.6	.8	10.16-4.564
14	14.6-15.8	1.2	4.564-1.375
15	15.8-16.2	.4	1.375-.9214
16	16.2-16.6	.4	.9214-.6176
17	16.6-17.0	.4	.6176-.4140
18	17.0-17.4	.4	.4140-.2775
19	17.4-17.6	.2	.2775-.2272
20	17.6-17.8	.2	.2272-.1860

Table A (Cont.)

GROUP	LETHARGY LIMITS	GROUP WIDTH Δ	$\sim$ E LIMITS ENERGY LIMITS, ELECTRON VOLTS
21	17.8-18.0	.2	.1860-.1523
22	18.0-18.2	.2	.1523-.1247
23	18.2-18.4	.2	.1247-.1021
24	18.4-18.6	.2	.1021-.08358
25	18.6-18.8	.2	.08358-.06843
26	18.8-19.0	.2	.06843-.05603
27	19.0-19.2	.2	.05603-.04587
28	19.2-19.4	.2	.04587-.03756
29	19.4-19.6	.2	.03756-.03075
30	19.6-19.8	.2	.03075-.02518

2.5

TABLE B

Thermal Groups

THERMAL GROUPS	LETHARGY	TEMPERATURE °F	ENERGY IN ELECTRON VOLTS
8	10.0	-	454.0
9	11.4	-	112.0
10	12.6	-	33.72
11	13.4	-	15.15
12	13.8	-	10.16
13	14.6	-	4.564
14	15.8	-	1.375
15	16.2	-	.9214
16	16.6	-	.6176
17	17.0	8180	.4140
18	17.4	5330	.2775
19	17.6	4280	.2272
20	17.8	3420	.1860
21	18.0	2720	.1523
22	18.2	2140	.1247
23	18.4	1672	.1021
24	18.6	1283	.08358
25	18.8	1065	.06843
26	19.0	710	.05603
27	19.2	490	.04587
28	19.4	324	.03756
29	19.6	183	.03075
30	19.8	66	.02518

TABLE C

Element Code for Tape 7 as of April 30, 1955

(All cross-sections are microscopic group averages and scaled by 10^{-3} unless otherwise noted.)

jj Position on Tape	Element	Remarks
00	U^{235}	
01	B	
02	O	
03	F	
04	[illegible]	
05	C	
06	Be	
07	Ni	
08	Zr	Corr. 3/23/56
09	Na	
10	Li	
11	Si	
12	Mn	
13		
14		
15		
16	U^{235} variations	
17		
18		
19		
20	SS^{302}	Macroscopic
21	Al	
22		
23	U^{233}	
24		
25	D	

Table C (Cont.)

jj Position on Tape	Element	Remarks
26	H	$\bar{\sigma}_s$ treated separately
27		
28		
29	Fe	
30		
31		
32		
33		
34		
35		
36		
37		
38		
39		
40		
41		
42		
43	U^{238}	
44	Th	
45	Pu	10^{-4} scaling
46	N	
47		
48		
49		
50		
51		
52		
53		
54		

Table C (Cont.)

jj Position on Tape	Element	Remarks
55		
56		
57		
58	S	
59	Mo	

TABLE D

Assumed Fission Spectrum $\sum_i Z^i = 1.0$

Group	Z^i
1	.0210
2	.1023
3	.2070
4	.2316
5	.1835
6	.2195
7	.0351
8	0
⋮	
30	0

SECTION VI

EYEWASH OPERATING INSTRUCTIONS

I. To start computation

a. Mount tapes as follows:

Servo 1 Program Tape 43 blocks

Servo 2 Initial conditions 1 or 2 blocks per case

Servo 3 Blank

Servo 4 Blank

Servo 5 Blank

Servo 6 Blank - if cross-sections are to be edited.

Servo 7 $\bar{\sigma}$ Tape 213 blocks

b. Initial read Servo 1 (S. C. typewriter on normal)

II. Continuous running

a. Computer calls for <u>reactor number</u>

b. Depress breakpoints if any (see III)

c. Type in reactor number

d. Computer calls for <u>date</u>. The rest of the type outs are only for record and require no type in.

e. Output (edited) is on Servo 4; the number of blocks to each case is printed on S. C.

III. Use of breakpoints:

a. To change initial conditions: Force transfer on BP7. Computer will call for the address of the initial condition to be changed. Consult the format for this address. When it is typed in, it will type out the value that now is in that position. Type in the desired value. Continue to force transfer until all the desired changes have been made.

b. To edit flux: Force transfer on BP5.

c. To edit cross-sections: Force transfer on BP6.

d. To change A or P scaling: Force transfer on BP8.

e. To change flux-source dependent scaling: Force transfer on BP9.

In case of overflow

f. To end continuous running or to change output tape: Force transfer on BP4. Computer will type out "New Tape 4" and come to a stop. All tapes are rewound at this time. To continue running merely hit start bar. Be sure to label Tape 4.

IV. Printer Instructions:

Single space

Normal

Narrow paper

Margin at extreme left

IV. Printer Instructions (Cont.):

Tabs at: Margin + 12

Tab 1 +15

+15

+15

+15

+12

There is a breakpoint at top of each page and also at the end of the last page of each case.

INITIAL CONDITIONS FORMAT

PROBLEM EYEWASH PAGE 1

DATE

BB	88 0							X	X	X	X	X	X	Reactor Number	
	1												X	Number of regions $1 \leq R_\Omega \leq 9$	
	2	0	X	X	X	X	X	X	X	X	X	X	X	Δr cm	
	3											X	X	Outside Boundary $B_\Omega \leq 60$	
	4	0	0	0	Z_1	Z_2	Z_3	Z_4	Z_5	Z_6	Z_7	Z_8	Z_9	Z=1, Region fissionable; Z=0, non-fissionable	
	5											X	X	Thermal iteration group number	
	6													$9 \leq Th \leq 30$	
	7														
	8														
	9														
	89 0											X	X	B_1	Boundary
	1	0	X	X	X	X	X	X	X	X	X	X	X	L_1	Self-shielding component
	2												X	j_{Ω_1}	Number of materials ≤ 7
	3	0	N	N	N	N	N	N	N	N	N	j	j		Concentration and
	4	0	N	N	N	N	N	N	N	N	N	j	j		material code
	5														
	6														R = 1
	7														
	8														
	9	0	N	N	N	N	N	N	N	N	N	j	j		
	90 0											X	X	B_2	
	1	0	X	X	X	X	X	X	X	X	X	X	X	L_2	
	2												X	j_{Ω_2}	
	3	0	N	N	N	N	N	N	N	N	N	j	j		
	4														
	5														R = 2
	6														
	7														
	8														
	9														

DATE

910	
1	
2	
3	
4	
5	R = 3
6	
7	
8	
9	
920	
1	
2	
3	
4	
5	R = 4
6	
7	
8	
9	
930	
1	
2	
3	
4	
5	R = 5
6	
7	
8	
9	

BE

TYPE ONLY IF $R_\Omega > 5$

PROBLEM

DATE

BB	940	
	1	
	2	
	3	
	4	
	5	R = 6
	6	
	7	
	8	
	9	
	950	
	1	
	2	
	3	
	4	
	5	R = 7
	6	
	7	
	8	
	9	
	960	
	1	
	2	
	3	
	4	
	5	R = 8
	6	
	7	
	8	
	9	

DATE

970
1
2
3
4
5 R = 9
6
7
8
9
980
1
2
3
4
5
6
7
8
9
990
1
2
3
4
5
6
7
8
9

BE

EYEWASH FLOW CHART A
GENERAL

UNCLASSIFIED
ORNL-LR-DWG 5300

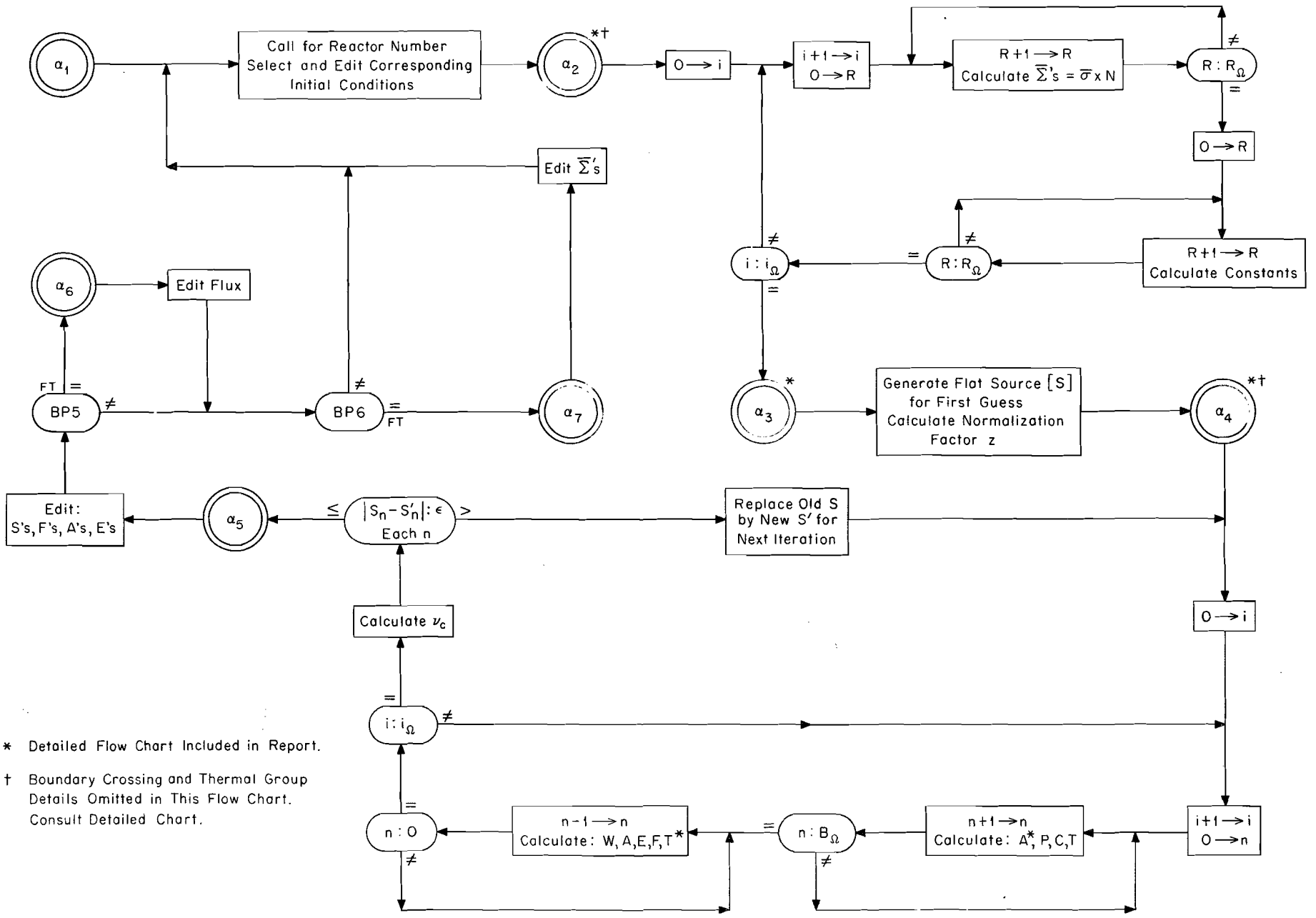

* Detailed Flow Chart Included in Report.

† Boundary Crossing and Thermal Group Details Omitted in This Flow Chart. Consult Detailed Chart.

UNCLASSIFIED
ORNL-LR-DWG 5302

EYEWASH FLOW CHART B
CONSTANTS

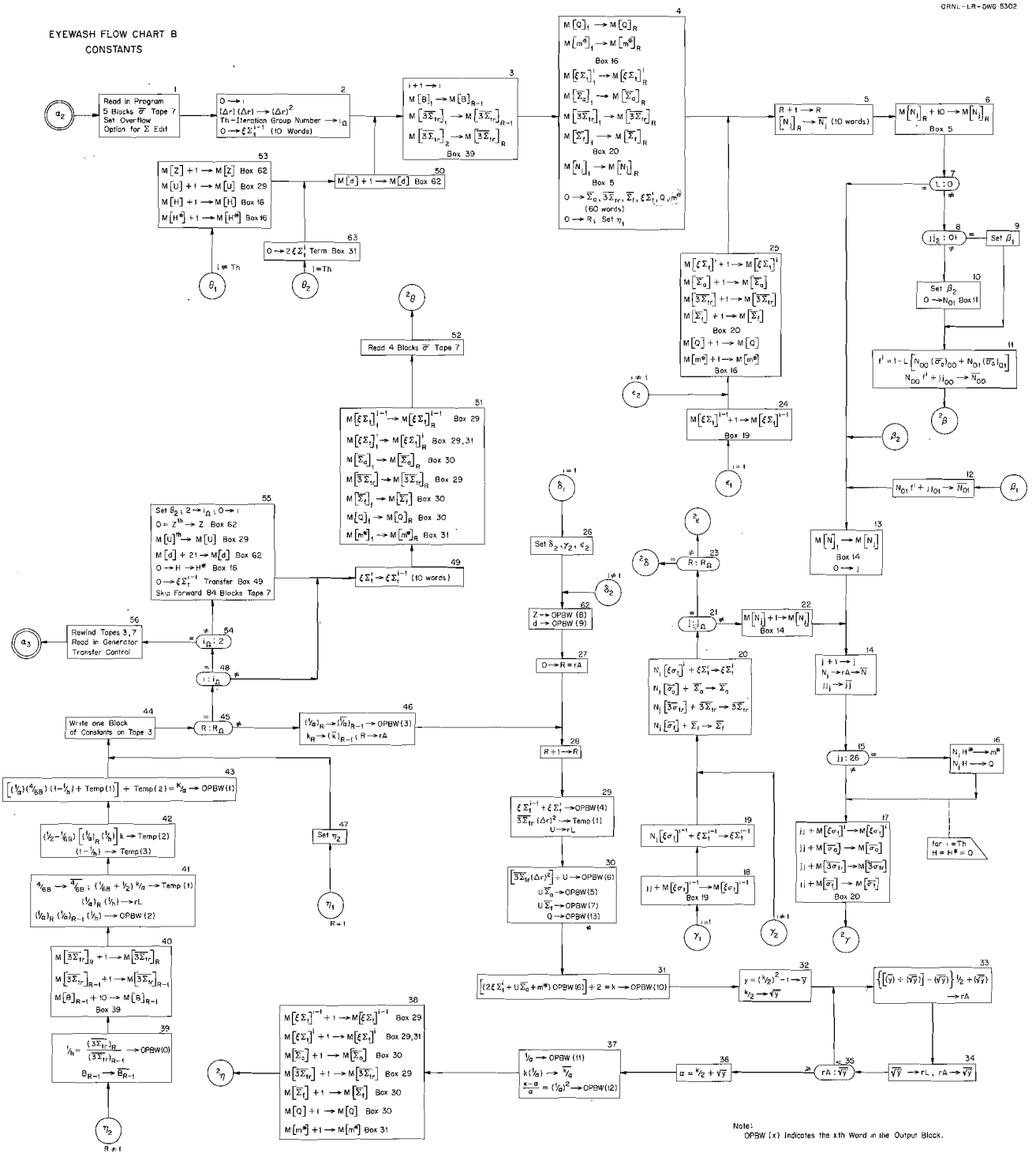
Read in Program
5 Blocks σ Tape 7
Set Overflow
Option for Σ Edit
Read 4 Blocks σ Tape 7
Rewind Tapes 3, 7
Read in Generator
Transfer Control
Write one Block
of Constants on Tape 3
Skip Forward 84 Blocks Tape 7
Box 39
Box 16
Box 20
Box 5
Box 19
(60 words)
(10 words)
Set η1
Set η2
Set β1
Set β2
Set δ2, γ2, ε2
Transfer Box 49
Transfer Box 31
Term Box 31
Transfer Control
Generator
Overflow
Edit
Group Number
Iteration
Tape 7
Tape 3
Block
Constants
Write
Read
Set
Skip
Forward
Rewind
Transfer
Box 29
Box 30
Box 31
Box 62
Box 11
Box 14
Box 17
Box 18
Box 33
Box 34
Box 35
Box 36
Box 37
Box 38
Box 39
Box 40
Box 41
Box 42
Box 43
Box 44
Box 45
Box 46
Box 47
Box 48
Box 49
Box 50
Box 51
Box 52
Box 53
Box 55
Box 56
Box 63
OPBW (1)
OPBW (2)
OPBW (3)
OPBW (4)
OPBW (5)
OPBW (6)
OPBW (7)
OPBW (8)
OPBW (9)
OPBW (10)
OPBW (11)
OPBW (12)
OPBW (13)
Temp (1)
Temp (2)
Temp (3)
Th = Iteration Group Number
Set Overflow
Option for Σ Edit
Read in Program
Skip Forward
Transfer Control
Transfer Box 49
Transfer Box 31
Term Box 31
Set Overflow

EYEWASH FLOW CHART C
SOURCE GENERATOR

UNCLASSIFIED
ORNL-LR-DWG 7426

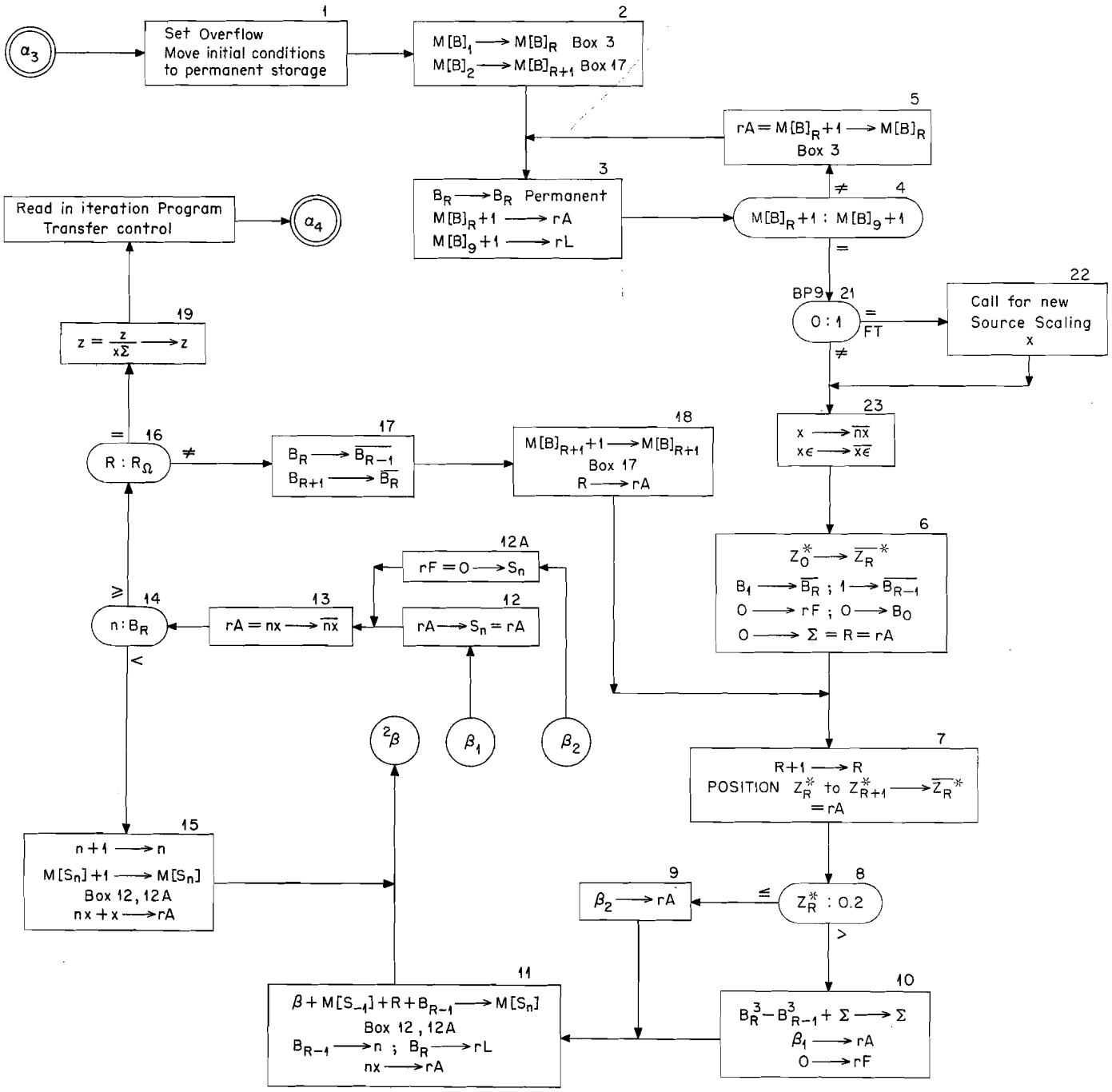

EYEWASH FLOW CHART D
ITERATION

UNCLASSIFIED
ORNL-LR-DWG 5304

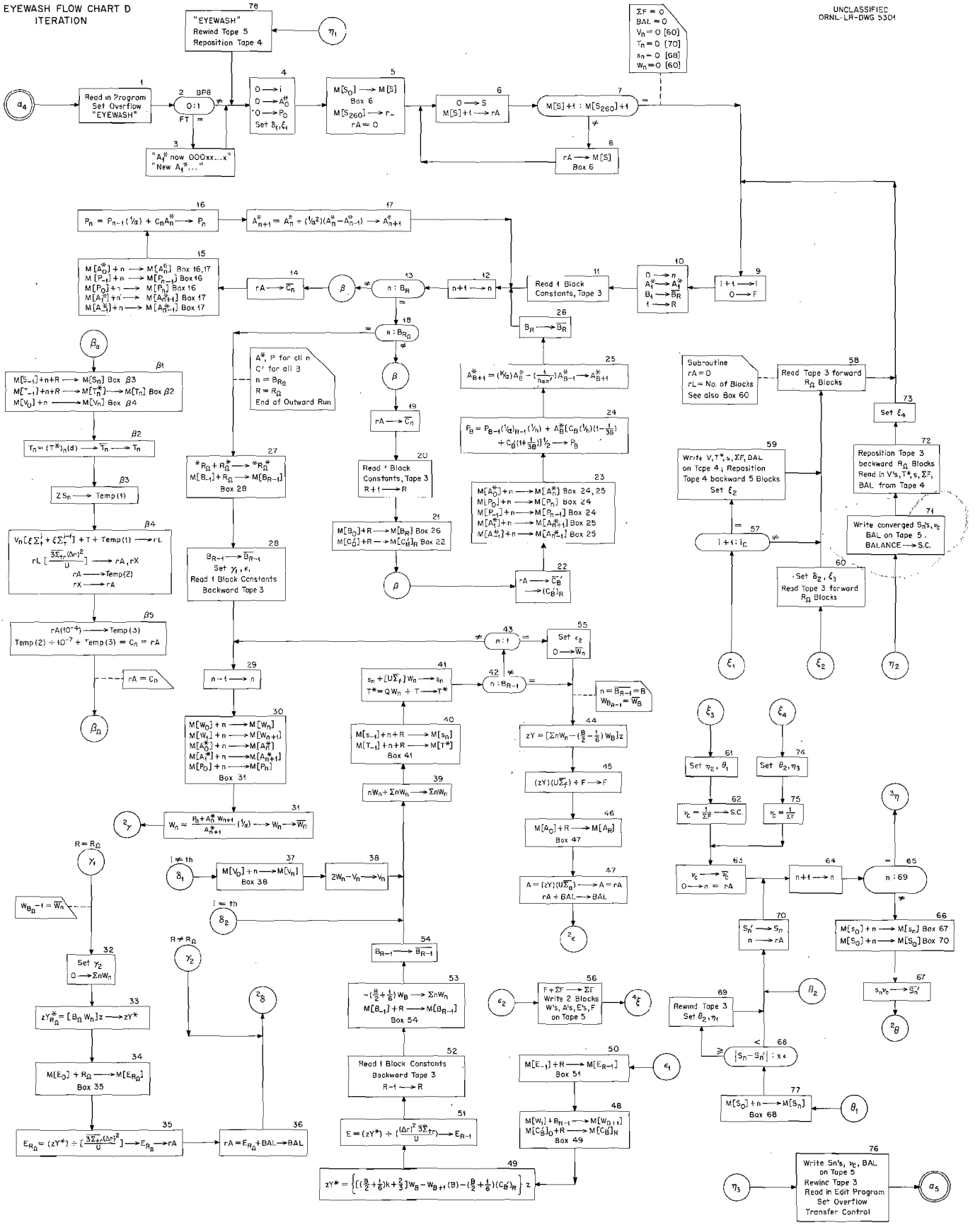

SECTION VIII

STORAGE ASSIGNMENTS

Tape Lay-out

Tape 1: Program 43 blocks

Block #	
1-4	Initial condition selection and page one editing.
*5-13	Cross-section averaging and constants calculation.
*14-15	Source generator.
*16-22	Iteration.
23-41	Editing.
42-43	$\bar{\sigma}$ insert program.

* Flow chart included in this report.

Tape 2: Initial Conditions 1 or 2 blocks per case (See Format)

Tape 3: Group Constants $\left[i_\Omega + 2\right] R_\Omega$ blocks

Block #		
1	$i = 1$	$R = 1$
2	$i = 1$	$R = 2$
⋮		
R_Ω	$i = 1$	$R = R_\Omega$
$R_\Omega + 1$	$i = 2$	$R = 1$
⋮		
$i_\Omega R_\Omega$	$i = i_\Omega$	$R = R_\Omega$
$i_\Omega R_\Omega + 1$	$i = th(\Omega - 1)$	$R = 1$
⋮		
$(i_\Omega + 1)R_\Omega$	$i = th(\Omega - 1)$	$R = R_\Omega$

$(i_\Omega + 1)\, R_\Omega + 1 \qquad i = th\,\Omega \qquad R = 1$

$\vdots$

$(i_\Omega + 2) R_\Omega \qquad i = th\,\Omega \qquad R = R_\Omega$

For word lay-out see constants storage table 580-593. 580 corresponds to OPBW(0) on flow chart VII.B.

Tape 4: Edited Output Number of blocks variable.

Also intermediate storage for 5 blocks data for $i = i_\Omega - 1$ to be used for $th(\Omega - 1)$.

Tape 5: Iteration Results Storage $2(i_\Omega + 4)$ blocks.

Block #	Word #			
1	00-08	$10^{-1}A$	$R = 1, 2 \ldots R_\Omega$	$i = 1$
	09	$10^{-5}F$		
	10-18	$10^{-1}E$	$R = 1, 2 \ldots R_\Omega$	
2	00-59	$10^{-4}W_n$		
$\vdots$				
$2i_\Omega - 1$	00-08	$10^{-1}A$		$i = i_\Omega$
	09	$10^{-5}F$		
	10-18	$10^{-1}E$		
$2i_\Omega$	00-59	$10^{-4}W_n$		

$2i_\Omega + 1$	00-08	$10^{-1}A$	$i = th\Omega$
	09	$10^{-5}F$	
	11-18	$10^{-1}E$	
$2(i_\Omega + 1)$	00-59	$10^{-4}W_n$	
$2(i_\Omega + 1)+1$	00-59	$10^{-3}s_n$	
$2(i_\Omega + 2)$	00-07		
	08	$10^{-2}\nu_c$	
	09	10^{-1} BAL	
$2(i_\Omega + 2)+1$	00-08	$10^{-1}A$	$i = th(\Omega - 1)$
	09	$10^{-5}F$	
	11-18	$10^{-1}E$	
$2(i_\Omega + 3)$	00-59	$10^{-4}W_n$	
$2(i_\Omega + 3)+1$	00-59	$10^{-3}s_n$	
$2(i_\Omega + 4)$	00-07		
	08	$10^{-2}\nu_c$	
	09	10^{-1} BAL	

Tape 6: Macroscopic Cross-Sections $i_\Omega + 3$ blocks.

Block #	Word #			
1	00-29	$1 - e^{U_i}$		
2	00-09	$10^{-3}\xi\Sigma_t$	$R = 1, 2, \ldots R_\Omega$	$i = 1$
	10-19	$10^{-3}\bar{\Sigma}_a$	$R = 1, 2, \ldots R_\Omega$	

		20-29	$10^{-3}\ \overline{3\Sigma_{tr}}$	$R = 1, 2, \ldots R_{\Omega}$	$i = 1$
		30-39	$10^{-3}\ \overline{\Sigma}_f$	$R = 1, 2, \ldots R_{\Omega}$	
		50-59	$10^{-4}\ m^*$	$R = 1, 2, \ldots R_{\Omega}$	
3	$i = 2$				
⋮					
$i_{\Omega}+1$	$i = i_{\Omega}$				
$i_{\Omega}+2$		00-09	$10^{-3}\xi\Sigma_t$		$i = th(\Omega-1)$
		10-19	$10^{-3}\ \Sigma_a$		
		20-29	$10^{-3}\ 3\Sigma_{tr}$		
		30-39	$10^{-3}\ \Sigma_f$		
$i_{\Omega}+3$	$i = th\,\Omega$				

Tape 7: Group Averaged Microscopic Cross-Sections 213 blocks.

Block #			
1	$10^{-3}\ \xi\sigma_t$	$i = 0$	$jj = 00, 01, \ldots 59$
2	$10^{-3}\ \overline{\sigma}_a$		
3	$10^{-3}\ \overline{3\sigma_{tr}}$	$i = 1$	$jj = 00, 01, \ldots 59$
4	$10^{-3}\ \overline{\sigma}_f$		
5	$10^{-3}\ \xi\ \sigma_t$		
⋮			
121	$10^{-3}\ \xi\ \sigma_t$	$i = 30$	

122	$10^{-3}\ \sigma_a$	i = th 8
123	$10^{-3}\ 3\sigma_{tr}$	
124	$10^{-3}\ \sigma_f$	
125	$10^{-3}\ \xi\sigma_t$	
⋮		
210	$10^{-3}\ \sigma_a$	i = th 30
211	$10^{-3}\ 3\sigma_{tr}$	
212	$10^{-3}\ \sigma_f$	
213	$10^{-3}\ \xi\sigma_t$	

For group interval description see Tables V.A and V.B. For element list (jj = 00, 01, ... 59) see Table V.C.

Constants Calculation Storage Table

000-479	Program and fixed storage		
300-329		$10^{-3}H$	i = 1, 2, ... 30
330-359		$10^{-4}H^*$	
360-389		$10^{-1}U$	
390-419		$10^{-4}Z$	
420-479		$10^{-1}d$	i = 1, 2, ... 30, th-8, th-9 ... th-30.

480-498	Working Storage	
480		N
481		jj
482		j
483		i
484		i_{Ω}
485		R
486-497		Temporary storage
498		B_{R-1}
510-519	$10^{-3}\ \xi\Sigma_t^{i-1}$	$R = 1, 2, \ldots R_{\Omega}$
520-529	$10^{-3}\xi\Sigma_t^{i}$	
530-539	$10^{-3}\ \bar{\Sigma}_a$	
540-549	$10^{-3}\ \overline{3\Sigma}_{tr}$	
550-559	$10^{-3}\ \bar{\Sigma}_f$	
560-569	$10^{-3}\ Q$	
570-579	$10^{-4}\ m^*$	
580-639	$10^{-3}\ \xi\ \sigma_t^o$, replaced by group constants, one set each i each R:	

OPBW(0)	580	$10^{-1}(1 + h)$	Boundary crossing constants; irrelevant when R = 1 .
OPBW(1)	581	$10^{-2}(K + \alpha_R)$	
OPBW(2)	582	$10^{-1}\left[1 + h\ \alpha_{R-1}\ \alpha_R\right]$	
OPBW(3)	583	$1 + \alpha_{R-1}$	
OPBW(4)	584	$10^{-3}\left[\xi\Sigma_t^{i-1} + \xi\Sigma_t^{i}\right]$	when i = th, $10^{-3}\ \xi\Sigma_t^{th}$

OPBW(5)	585	$10^{-4}\left[U\,\bar{\Sigma}_a\right]$	
OPBW(6)	586	$10^{-4}\left[(\Delta r)^2\,\overline{3\Sigma}_{tr} \div U\right]$	
OPBW(7)	587	$10^{-2}\left[U\,\bar{\Sigma}_f\right]$	
OPBW(8)	588	$10^{-4}\,Z$	
OPBW(9)	589	$10^{-1}\,d$	
OPBW(10)	590	$10^{-2}\,k$	
OPBW(11)	591	$\left[1 \div \alpha_R\right]$	
OPBW(12)	592	$\left[1 \div \alpha_R\right]^2$	
OPBW(13)	593	$10^{-3}Q$	when i = th, 0

640-699 $10^{-3}\,\xi\sigma_t^i$ jj = 00, 01, ... 59

700-759 $10^{-3}\,\bar{\sigma}_a$

760-819 $10^{-3}\,\overline{3\sigma}_{tr}$

820-879 $10^{-3}\,\bar{\sigma}_f$

880-979 Initial conditions as read from Tape 2.

880 Reactor identification number.

881 R_Ω

882 $10^{-1}\,\Delta r$

883 B_Ω

884 Fissionable region indicator Z_R^*

885 Thermal iteration group number.

888 Date

890-899 Region 1 description

	890	B_1
	891	$10^{-1} L_1$
	892	j_Ω
	893	N_1 and jj
	894	N_2 and jj
	⋮	
900-909		Region 2 description
⋮		
980-989	zero	Replaced by region description working storage represented by $\left[\bar{\bar{N}}_j\right]_R$ on flow chart. 10 word transfer.
990-999	zero	

<u>Source Generator Storage Table</u>

000-059	Program	
060-099	Program storage	
	070	$\epsilon = 10^{-1}$
	090	$10^{-3}x = .001$
	091	10^{-3} nx
	092	n
	093	R
	094	B_{R-1}
	095	B_R
	096	$Z^*_R \cdots Z^*_{R_\Omega}$
	097	$10^{-6} \Sigma$

900-969	$10^{-3}\ S_n$	$M\left[S_n\right] = 898 + n + R$
980-999	Permanent storage.	
980	$0 = B_o$	
981	B_1	
982	B_2	
983	B_3	
984	B_4	
985	B_5	
986	B_6	
987	B_7	
988	B_8	
989	B_9	
990	Reactor identification number	
991	R_Ω	
992	$10^{-1}\ \Delta r$	
993	B_Ω	
994	$000Z_1^*\ Z_2^*\ Z_3^*\ \cdots\ Z_9^*$	
995	Thermal iteration group number	
996	$10^2\ z$	
997	$10^{-3}\ x\ \epsilon$	
998	Date	
999	Output block tally	

Iteration Storage Table

000-299	Program	
300-393	Program Fixed Storage	
422-429	Program Working Storage	
422	i	
423	Edited reactor identification number	
424	n	
425	n	
426	R	
427	R	
428	B_R outward; B_{R-1} inward	
429	$10^{-2}\ \nu_c$	
430-438	10^{-1} A	$R = 1, 2, \ldots R_\Omega$
439	10^{-5} F	
440-449	10^{-1} E	$R = 1, 2, \ldots R_\Omega$
450-457	$10^{-4}\ C'_B$	
459-519	A*	$n = 0, 1, \ldots B_\Omega$
520-579	10^{-2}P	$n = 0, 1, \ldots (B_\Omega - 1)$
580-639	Input block group constants; also temporary storage 601-619.	
640-699	10^{-4} W	$n = 1, 2, \ldots B_\Omega$
700-759	10^{-4} V	$n = 1, 2, \ldots B_\Omega$

760-827	10^{-7} T and 10^{-7} T*	n = 1, 2, ... B_Ω (Duplication at inner boundaries)
830-897	10^{-3} s	n = 1, 2, ... B_Ω (Same duplication)
898	10^{-5} $\Sigma F \rightarrow \nu_c$	
899	10^{-1} BAL	
900-969	10^{-3} S	n = 1, 2, ... B_Ω (Same duplication)
970-979	Program working storage.	
970	10^{-4} C	
971	10^{-4} C'	
972	10^{-7} T	
973	10^{-3} n	
974	10^{-4} W_{n+1}	
975	10^{-4} W_n	
976	10^{-7} $\Sigma n\ W_n$	
977	10^{-5} z Y*	
978	10^{-3} (B/2 + 1/6)	
979	10^{-3} S'_n	
980-999	Permanent storage (see ~~Constants~~ Generator Storage Table).	

JHA:NDG:ih
6/16/55