UNCLASSIFIED

MARTIN MARIETTA ENERGY SYSTEMS LIBRARIES
3 4456 0360989 7

CENTRAL RESEARCH LIBRARY
DOCUMENT COLLECTION

ORNL-1929
Instrumentation

cy. 4

ELECTRONIC INSTRUMENTATION FOR A MULTIPLE-CRYSTAL GAMMA-RAY SCINTILLATION SPECTROMETER

T. A. Love
R. W. Peelle
F. C. Maienschein

Checked out to J Kramer
CENTRAL RESEARCH LIBRARY
DOCUMENT COLLECTION
LIBRARY LOAN COPY
DO NOT TRANSFER TO ANOTHER PERSON
If you wish someone else to see this document, send in name with document and the library will arrange a loan.

OAK RIDGE NATIONAL LABORATORY
OPERATED BY
UNION CARBIDE NUCLEAR COMPANY
A Division of Union Carbide and Carbon Corporation
UCC
POST OFFICE BOX P · OAK RIDGE, TENNESSEE

UNCLASSIFIED

UNCLASSIFIED

ORNL-1929

Copy No. 4

Contract No. W-7405-eng-26

Applied Nuclear Physics Division

Bulk Shielding Facility

ELECTRONIC INSTRUMENTATION FOR A MULTIPLE-CRYSTAL GAMMA-RAY SCINTILLATION SPECTROMETER

T. A. Love
R. W. Peelle
F. C. Maienschein

DATE ISSUED

OCT 3 1955

OAK RIDGE NATIONAL LABORATORY
Operated by
UNION CARBIDE NUCLEAR COMPANY
A Division of Union Carbide and Carbon Corporation
Post Office Box P
Oak Ridge, Tennessee

UNCLASSIFIED

MARTIN MARIETTA ENERGY SYSTEMS LIBRARIES

3 4456 0360989 7

INTERNAL DISTRIBUTION

1. C. E. Center
2. Biology Library
3. Health Physics Library
4-5. Central Research Library
6. Reactor Experimental Engineering Library
7-11. Laboratory Records Department
12. Laboratory Records, ORNL R.C.
13. C. E. Larson
14. L. B. Emlet (K-25)
15. J. P. Murray (Y-12)
16. A. M. Weinberg
17. E. H. Taylor
18. E. D. Shipley
19. A. H. Snell
20. F. C. VonderLage
21. W. H. Jordan
22. S. J. Cromer
23. G. E. Boyd
24. R. A. Charpie
25. J. A. Swartout
26. S. C. Lind
27. F. L. Culler
28. A. Hollaender
29. J. H. Frye, Jr.
30. W. M. Good
31. M. T. Kelley
32. G. H. Clewett
33. R. S. Livingston
34. K. Z. Morgan
35. T. A. Lincoln
36. A. S. Householder
37. C. P. Keim
38. C. S. Harrill
39. C. E. Winters
40. D. S. Billington
41. D. W. Cardwell
42. E. M. King
43. E. O. Wollan
44. A. J. Miller
45. J. A. Lane
46. R. B. Briggs
47. L. D. Roberts
48. R. N. Lyon
49. W. C. Koehler
50. E. P. Blizard
51. M. E. Rose
52. D. D. Cowen
53. W. M. Breazeale (consultant)
54. M. J. Skinner
55. J. E. Sherwood
56. R. B. Murray
58. E. D. Klema
59. R. R. Dickison
60. B. C. Behr
61. P. R. Bell
62. T. V. Blosser
63. A. D. Callihan
64. G. T. Chapman
65. C. E. Clifford
66. J. B. Dee
67. E. Fairstein
68. J. E. Francis
69. F. M. Glass
70. K. M. Henry
71. G. G. Kelley
72. J. H. Knox
73. T. A. Love
74. C. O. McNew
75-124. F. C. Maienschein
125. F. W. Manning
126. J. M. Miller
127. F. J. Muckenthaler
128. R. W. Peelle
129. J. M. Sellers
130. R. D. Smiddie
131. G. G. Stout
132. F. N. Watson
133. D. D. Walker
134. H. N. Wilson
135. A. Simon
136. ORNL Document Reference Library, Y-12 Branch

EXTERNAL DISTRIBUTION

137. R. F. Bacher, California Institute of Technology
138. Division of Research and Medicine, AEC, ORO
139. W. K. H. Panofsky, Stanford University
140-466. Given distribution as shown in TID-4500 under Instrumentation category

DISTRIBUTION PAGE TO BE REMOVED IF REPORT IS GIVEN PUBLIC DISTRIBUTION

Table of Contents

Introduction 1

Scintillation Detectors 4

High-Voltage Power Supplies 5

Four-Channel Test Pulse Generator 5

Preamplifiers and Amplifiers 6

Differential Pulse Height Analyzers 10

Coincidence Circuit 11

Automatic Counting Rate Recording Instrument 14

Conclusions and Acknowledgements 16

Appendix A 17

Introduction

The theory and operation of the multiple-crystal coincidence gamma-ray energy spectrometer in use at the Bulk Shielding Facility has been discussed previously.[1] In this report a description of the electronic equipment used in conjunction with this gamma-ray spectrometer as of February 1, 1955, is given.

The electronic equipment for this spectrometer is rather generally applicable to any multiple-crystal spectrometer, although the current design has been pointed toward the measurement of the prompt fission gamma-ray spectrum. This problem involves equipment more complicated than does the conventional multiple-crystal spectrometer because of the necessity of recording only those gamma rays which accompany the fission process. This is accomplished by using a fission chamber as the gamma-ray source and by demanding that the pulses from the gamma-ray detector be in coincidence with the pulses from the fission chamber.

As described earlier,[1] the manner of operation of a multiple-crystal spectrometer depends upon the energy of the gamma rays to be studied. For energies less than 2.3 Mev a Compton spectrometer yields reasonably unique results, i.e., a monoenergetic gamma-ray source leads to a single peak in the pulse height distribution derived from the apparatus. In a Compton spectrometer, the photon energy is inferred from the spectrum of electrons corresponding to photons Compton scattered into

---

1. F. C. Maienschein, "Multiple-Crystal Gamma-Ray Spectrometer," ORNL-1142 (April 14, 1952).

angles greater than 90 deg. For energies above 1.6 Mev the pair-production cross section in NaI becomes appreciable and the equipment may be used as a pair spectrometer. Here the photon energy spectrum is derivable from the pulse height analysis of pulses corresponding to those electron pairs which are in coincidence with annihilation photons observed in crystals on both sides of the crystal exposed to the incident gamma-ray flux. Figure 1 shows a typical arrangement of crystals and collimator for use as described above.

The electronics problem is posed by the need to obtain that spectrum in one crystal which is in coincidence with events in the other crystals and in the fission chamber. The desired pulse height spectrum from the center crystal (A in Fig. 1) is currently recorded with the aid of a 40-channel analyzer to be described later in this report. This analyzer is gated "on" when a coincidence is recorded with the proper auxiliary detectors (B, C). In order to reduce the background problem, the coincidence system must be fairly complex, including a provision for rough energy discrimination for those photons detected in the B and C channels. Figure A-1 (Appendix A) shows a block diagram of the entire array of electronics, including all those individual components to be discussed in this report.

Most of the electronic equipment to be discussed was designed at ORNL by one of the groups involved with nuclear instrumentation.

UNCLASSIFIED
ORNL-LR-DWG 7469

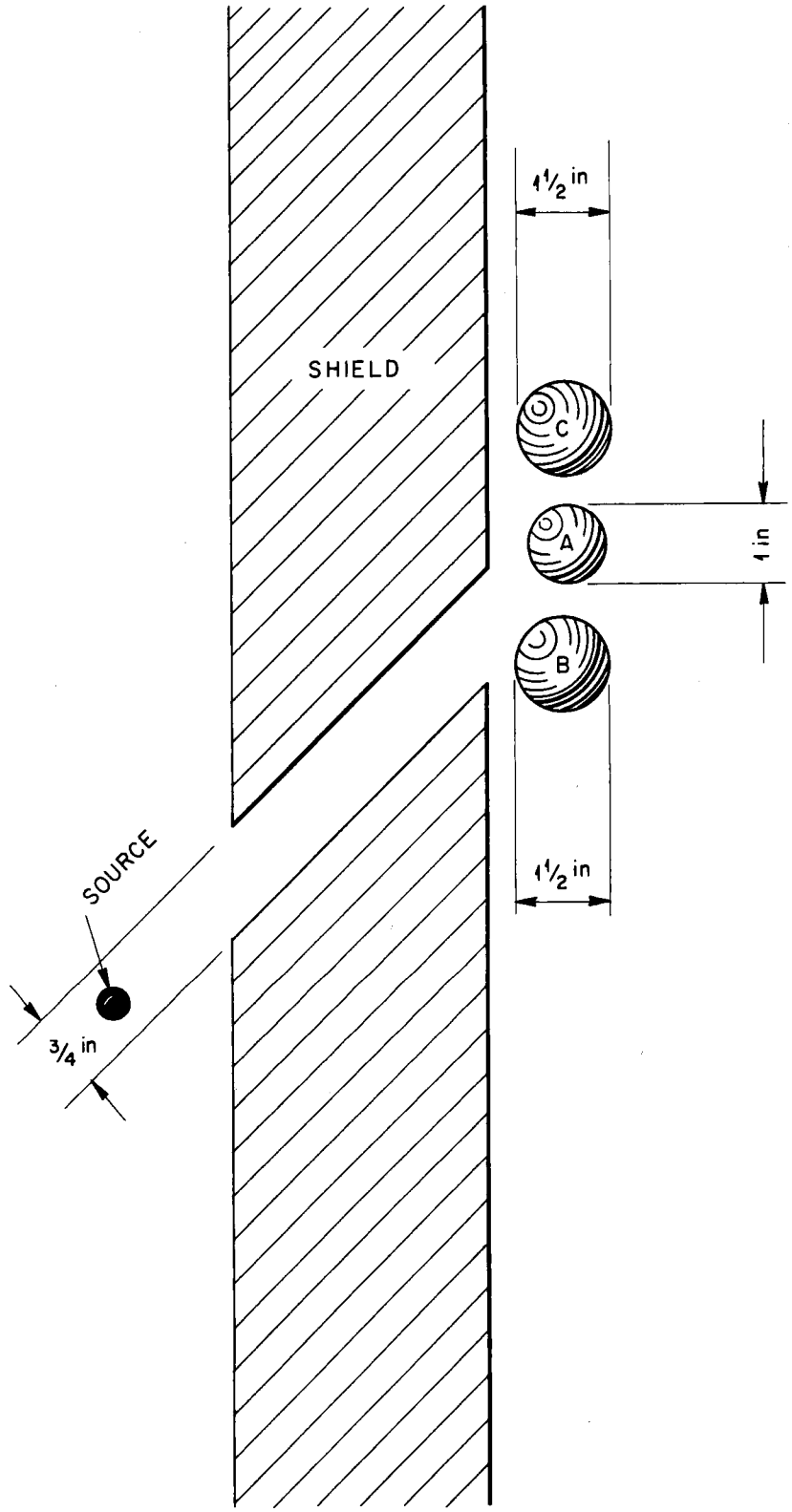

Fig. 1. Arrangement of NaI Crystals (A, B, and C) and Collimator of Gamma-Ray Spectrometer

Where the circuits have not been published previously, an attempt will be made to give credit to the engineer primarily responsible for the design.

Scintillation Detectors

Good results from a multiple-crystal NaI(Tl) scintillation spectrometer depend in the limit upon the performance of the scintillation crystals and photomultiplier tubes used. In general, for this spectrometer, the criterion was the width of the photopeak from Cs^{137} as determined by displaying the spectrum on the multichannel pulse height analyzer. Consistently good results have been attained by the use of commercially available mounted crystals* which may readily be moved from one photomultiplier to another. The criterion of resolution also favors the use of Dumont type 6292 phototubes. Considerable effort was expended in testing several of these tubes in order to determine the optimum voltage on the individual dynodes and the best over-all voltage. Figure A-2 shows the bleeder for the phototube socket which was decided upon as a result of these investigations. In general, total voltages from 700 to 1000 volts have been employed across the bleeder. For higher voltages some tubes exhibit breakdown and after-pulsing, in addition to nonlinear effects sometimes observed when the output current becomes too large.

---

* Harshaw Chemical Company, Cleveland, Ohio.

The tube and crystal combinations actually used for experimental work have resolutions (full percentage width at half maximum) for Cs^{137} between 7.5 and 10%.

High-Voltage Power Supplies

Gain stability of a scintillation spectrometer depends heavily upon the constancy of the high-voltage supply for the photomultiplier dynodes, since a given percentage drift in high voltage produces a percentage drift in output pulse height several times as large. The simultaneous use of three photomultiplier tubes, together with some current drain for continuous monitoring purposes, demands a supply with an output of at least 5 ma.

A negative high-voltage supply has been designed* which will furnish up to 10 ma at voltages up to 1950 volts, adjustable in 150-volt steps. Figure A-3 shows the circuit of this supply. Of those regulator tubes with adequate current-carrying capabilities, the VR 75 was found to be the most stable. The supply has been found to be quite satisfactory under conditions of constant load and constant AC input voltage. During actual use fluctuations were less than 0.1% after a 24-hr warmup period.

Four-Channel Test Pulse Generator

Figure A-4 shows the circuit schematic of a four-channel precision test pulse generator which allows a shaped pulse to be fed simultaneously into the linear amplifiers or preamplifiers of the

---

* Designed by B. C. Behr, ORNL Instrumentation and Controls Division.

various channels. The shape of the test pulse is made to match that of an integrated NaI pulse in order to avoid inconsistencies caused by variations in pulse shape. A generator of this type is necessary for proper alignment of the coincidence circuit, measurement and adjustment of time delays between the various signal channels, as well as for proper testing of the stability and linearity of the amplifiers and preamplifiers.

Preamplifiers and Amplifiers

Figures A-5a through A-5c show the diagram of the preamplifiers designed* to be placed within the spectrometer shield near the photomultiplier tube. Space limitations imply a severe heat dissipation problem, despite which the preamplifier operates in a rather trouble-free manner with a gain drift of less than 0.5% per 24 hr. In addition, the preamplifier drives a long (500-ft) 90-ohm coaxial cable without difficulty. The preamplifier is so designed that pulses from the test pulse generator may be mixed with signal pulses for test purposes.

All four of the signal channels used type A1D** fedback linear amplifiers. Figure A-6 shows the circuit as modified*** to

---

* Designed by Hugh Wilson, ORNL Instrumentation and Controls Division.

** Modified version of Type A1 amplifier described in MonP-323, W. H. Jordan and P. R. Bell, "Instruction for Use of A1 Amplifier and Preamplifier" (April 1950).

*** Modification by E. Fairstein, ORNL Chemistry Division.

improve the linearity at high output voltages. During routine operational checks linearity was within 0.5% for output pulses up to 100 volts. The amplifier shown has a gain of about 2000, and routine gain stability checks indicate drift to be less than 0.5% per 24 hr.

Much of the data with a multiple-crystal spectrometer must be taken with rather high counting rates in the individual channels, so the operation of the amplifiers under overload and fast counting conditions is of greatest importance. The design of the preamplifier allows some rather realistic tests of these overload and high counting rate properties.

These tests were performed by mixing, in the preamplifier, signals from the test pulse generator and the photomultiplier. A Cs^{137} source was used in different positions to vary the counting rate, and the high voltage was varied in order to change the degree of overload of the pulses originating in the phototube. The 40-channel analyzer was gated in coincidence with the pulses from the test pulse generator, so that only the generator pulses were recorded upon the multichannel analyzer. If the random pulses had no effect, a single sharp line would be observed at the position where the test pulse was set. Figure 2 shows the results of this study for the case where the Cs^{137} photopeak occurred at about 100 volts, curves being shown for various total counting rates. Figure 3 shows similar curves

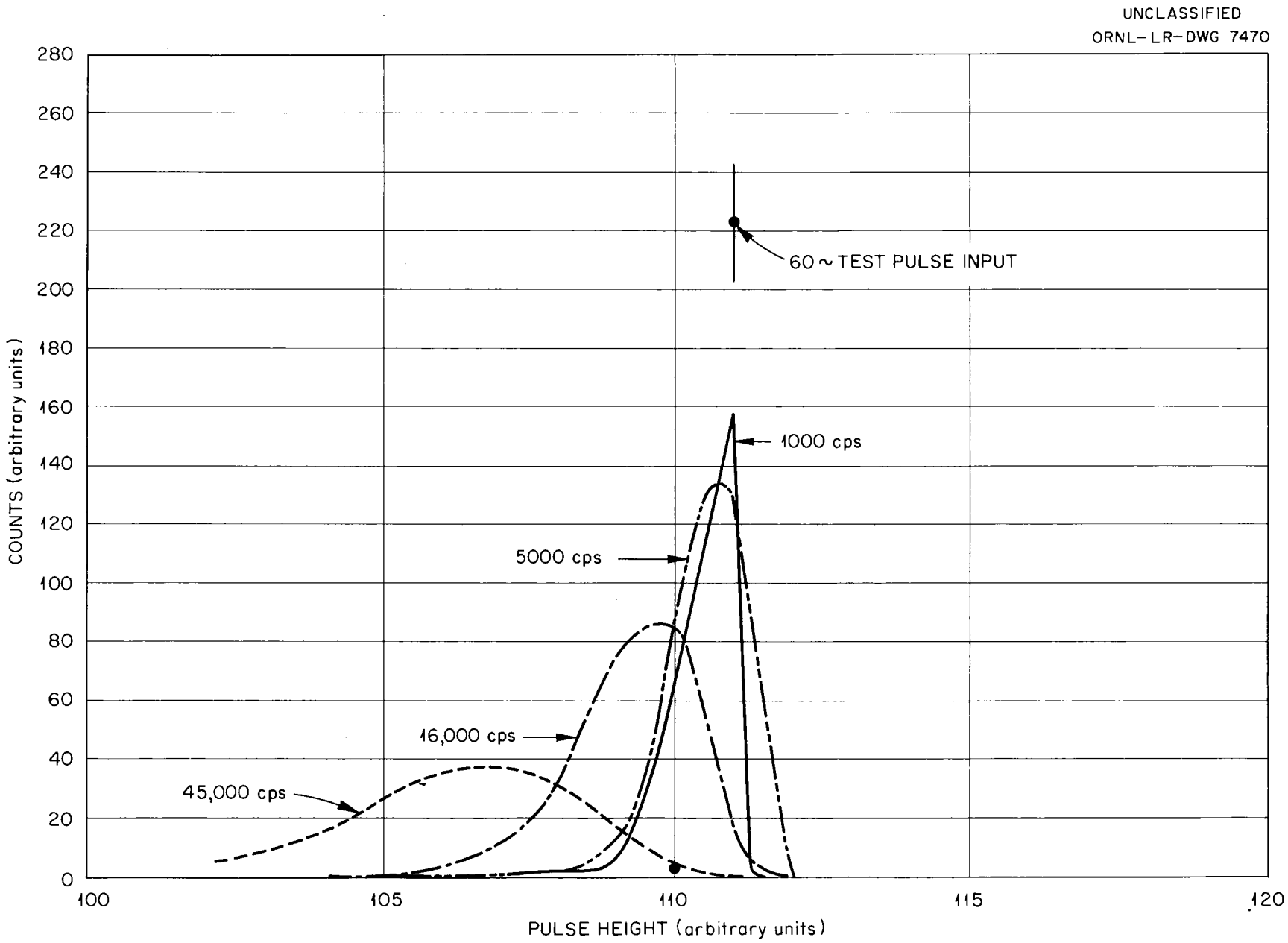

Fig. 2. Resolution of the Electronic Equipment Associated with the Multiple-Crystal Spectrometer as a Function of Counting Rate — One-Time Overload.

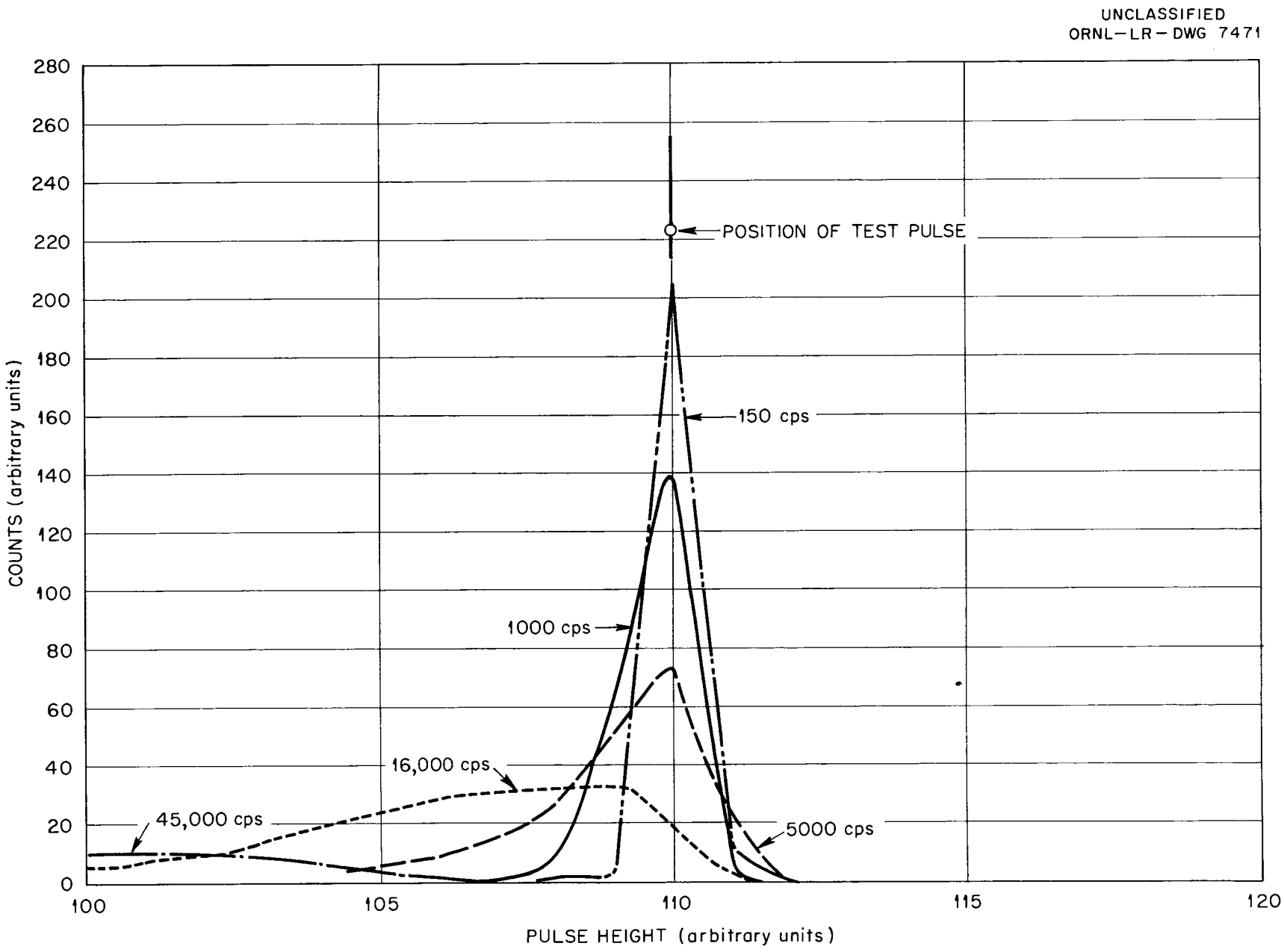

Fig. 3. Resolution of the Electronic Equipment Associated with the Multiple-Crystal Spectrometer as a Function of Counting Rate — Four Times Overload.

for the case where the Cs^{137} photopeak would occur at 400 volts were it not for overload of the amplifier. A notable difference in data of this type is noted when a 0.0056-mfd coupling condenser (C_{10}) in the second feedback loop of the amplifier is replaced* by a 0.1-mfd condenser. It must be noted that the multichannel analyzer was an integral part of the above tests, therefore the results described may be as much a representation of the behavior of the window amplifier in the analyzer as it is of the AlD amplifier. The improvement of the characteristics brought about by the change in condenser values noted above and the fact that the analyzer window amplifier is in any case saturated for all pulses larger than that needed to reach the highest channel of that particular analyzer imply that the AlD is the limiting factor. The analyzer window amplifier, which is forced to operate under overload conditions during normal operation, is designed to better recover from overload pulses than is the standard AlD or the slightly modified version used here.

Differential Pulse Height Analyzers

Signals from the fission chamber amplifier and from the B and C scintillation crystals were fed into conventional[2] single channel analyzers which had been altered only by the addition of an output pulse shaping circuit and by an increase to about 28 volts of the maximum available window width.

---

2. J. E. Francis, Jr., P. R. Bell, and J. C. Gundlach, "Single-Channel Analyzer," Rev. Sci. Instruments 22, No. 3, 133 (1951).

* Suggested by G. G. Kelley, ORNL Physics Division.

The pulse height analyzer which is used for analysis of the coincidence spectrum consists of two standard[3] 20-channel differential pulse height analyzers connected in such a way as to produce a 40 x 120 channel unit. As shown in Fig. A-1 all signals are fed into both analyzers on an equal basis. The system shown in Fig. A-7 was used to allow a natural adjustment of the two analyzers to the same pulse height scale. This circuit replaces the biasing arrangement originally built into each of the analyzers. By the use of the "E" dials a spectrum of 120 channels may be measured in three successive runs.

In order that runs may be conveniently and accurately timed, a system of automatic timers are incorporated as shown in Fig. A-8.

Coincidence Circuit

As can be seen from Fig. A-1, the coincidence circuit is divided into two sections, which are distinguished by their resolving times. In addition to these, the eventual addition of a "fast" coincidence circuit is contemplated. In the present arrangement, the intermediate speed coincidence circuit establishes the confluence in time of pulses from the various signal channels, while the slow unit in conjunction with the single channel analyzers eliminates those coincidences which correspond to pulses of the wrong size.

---

3. This analyzer was designed by G. G. Kelley and P. R. Bell of the ORNL Physics Division and is described by A. B. Van Rennes, "Pulse-Amplitude Analysis in Nuclear Research, Part IV," Nucleonics 10, No. 10, 50 (1952).

Figure A-9 shows the intermediate speed coincidence circuit designed* so that any combination of from one to five inputs from the PHS circuits of the AlD amplifiers will produce an output pulse if the separate pulses arrive within a specified time interval. The operation of the entire circuit is as follows if it is desired to use channels A, B, and C in a coincidence run. The intermediate coincidence circuit will question whether or not the pulses from these channels occur sufficiently close together in time. If they do this circuit will send a pulse into the slow coincidence circuit shown in Fig. A-10. The slow coincidence circuit mixes the output of the intermediate circuit with the outputs of the single-channel pulse height analyzers to form a gating pulse which turns on the multichannel analyzer when a proper coincidence has been established.

Figure 4 illustrates the operation of the coincidence circuit for the case where only a double coincidence is sought. The lower oscillograph trace of each couplet represents superimposed traces as observed at the plates of the 404A vacuum tubes on the two channels involved. These square pulses have a total length of about 100 μsec. The upper pulse of each couplet is the output pulse from the slow coincidence circuit for the same experimental conditions but for a different oscilloscope sweep speed. A comparison of the two sets of traces serves to illustrate the maximum region of uncertainty in time

---

* Designed by D. D. Walker, ORNL Instrumentation and Controls Division.

UNCLASSIFIED
ORNL-LR-DWG 7472

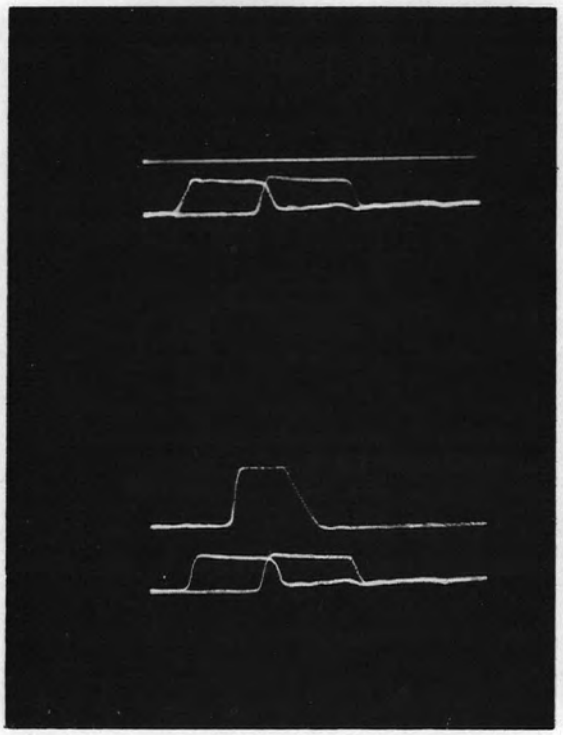

PULSES 100 mμsec LONG;
NO OUTPUT PULSE

PULSES 100 mμsec LONG;
OUTPUT PULSE AS SHOWN

Fig. 4. Resolution of Coincidence Circuit Associated with the Multiple-Crystal Gamma-Ray Spectrometer.

between a registered coincidence and a lack thereof. In the lower set the two 100-μsec gates are about 4 μsec closer together than in the top photograph. In the former case there are no coincidences registered, while in the latter all test pulses form coincidences.

Since the PHS circuit of the A1D is triggered by the output pulse of the amplifier, there is a time variation of the output of the PHS circuit relative to the occurrence of the event in the crystal which is a function of the height of the amplified pulse. The magnitude of this variation, dependent upon the rise time of the amplifier and the signal feeding it, is about 0.4 μsec. The difficulty is minimized by setting the PHS discriminator at a pulse height considerably lower than the lowest pulse height to be accepted in the corresponding differential pulse height analyzer. Considerable attention must be given to this problem because the length of the intermediate circuit gates used varies from 0.05 to 0.2 μsec, in all cases less than the total possible walk of the PHS pulse.

Automatic Counting Rate Recording Instrument

The normal operation of the coincidence spectrometer requires continuous runs of as long as 30 hr, often including long unattended periods. It has therefore seemed imperative that a system be devised for recording the counting rates being measured in the various signal channels. The assumption is made that many possible equipment drifts may so be detected.

A device has been designed* (see Fig. A-11) which sequentially inspects the counting rates in six different channels, normally the outputs of the AlD PHS circuits and the single-channel analyzers. This instrument, in combination with an associated linear count-rate meter (see Fig. A-12) and a Brown recorder, provides successive 2-min intervals for each channel. The utilization of the 2 min is as follows:

1. The instrument inspects a given input for 40 sec, drawing a line on the recorder chart, the position of which indicates a particular input. Simultaneously the range of the linear count-rate meter is adjusted by a stepping switch until the counting rate may be accurately read.
2. During the second 40-sec interval a line is drawn whose position indicates what range of the count rate meter is being used.
3. The last 40 sec is expended in the actual recording of the output of the count rate meter.

The above sequence is repeated for each of the six inputs, after which the whole process begins over again. The set of five ranges usually used covers the interval between 500 cps full scale and 50,000 cps full scale. This device has succeeded several times in locating the occurrence of intermittent operating difficulties.

---

* Designed by F. M. Glass, ORNL Instrumentation and Controls Division.

Conclusions and Acknowledgements

In conclusion it should be noted that despite its inherent complications, it is frequently possible to operate the spectrometer continuously over long periods except for a maintenance period of about 3 hr per day devoted largely to routine checks of energy calibration, zero positions on pulse height analyzers, and other alignment problems.

This work, along with that constantly made to improve the electronic equipment and to adapt it for new tasks, would be difficult without the help of instrument mechanics. The efforts of R. D. Smiddie and G. G. Stout, ORNL Instrument Department, have been directed largely toward this work for the past year.

Appendix A

Circuit Diagrams of Spectrometer Components

This appendix consists of a group of diagrams of the components of the multiple-crystal gamma-ray spectrometer.

Fig. A-1. Block Diagram of Fission Gamma-Ray Spectrometer Electronics.

Fig. A-2. Bleeder Resistors and Tube Pin Connections.

Fig. A-3. High-Voltage Supply Circuit.

Fig. A-4. 4-Channel Precision Pulser Circuit.

Fig. A-5a. Preamplifier for the Photomultiplier.

Fig. A-5b. Preamplifier Power Supply Circuit.

Fig. A-5c. Preamplifier for the Fission Chamber.

Fig. A-6. Linear Amplifier with Delay Line Differentiation.

Fig. A-7. Circuit Used to Tie Two 20-Channel Analyzers Together.

Fig. A-8. 20-Channel Analyzer Timer Circuit.

Fig. A-9. Multicoincidence Analyzer Intermediate Unit Circuit.

Fig. A-10. Multicoincidence Analyzer Slow Unit Circuit.

Fig. A-11. Automatic Data Taker Circuit.

Fig. A-12. Linear Count Rate Meter Circuit.

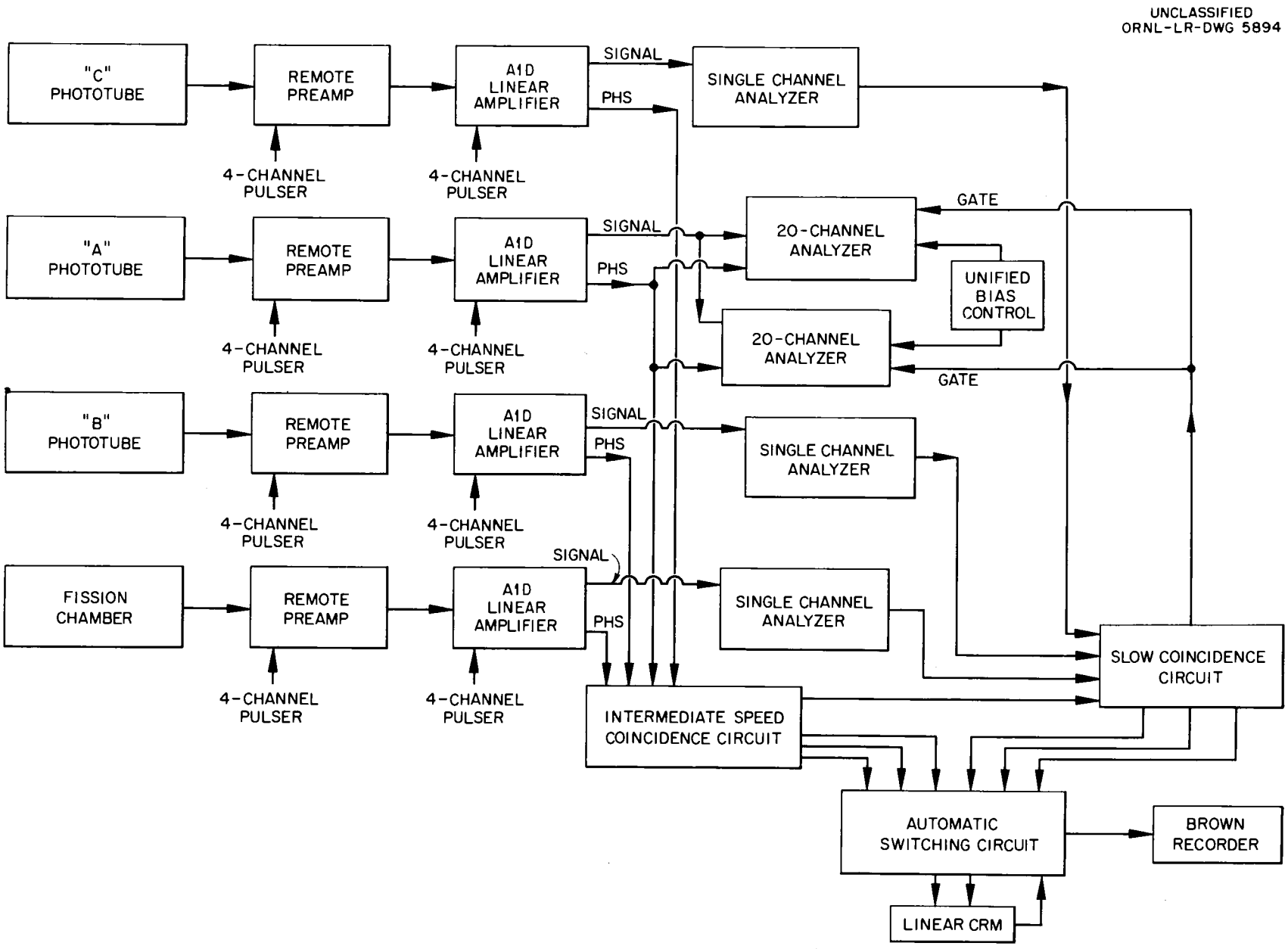

Fig. A-1. Block Diagram of Fission Gamma-Ray Spectrometer Electronics.

UNCLASSIFIED
ORNL-LR-DWG 7473

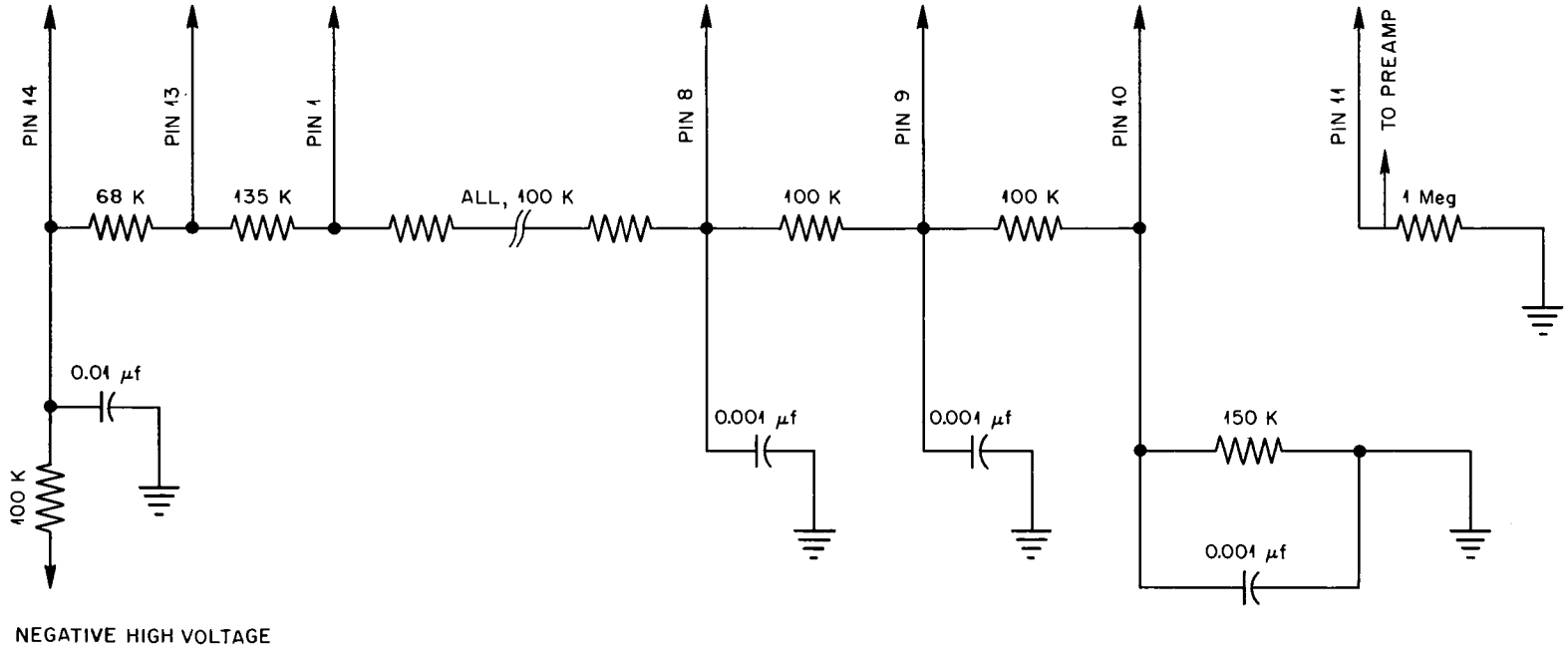

Fig. A–2. Bleeder Resistors and Tube Pin Connections.

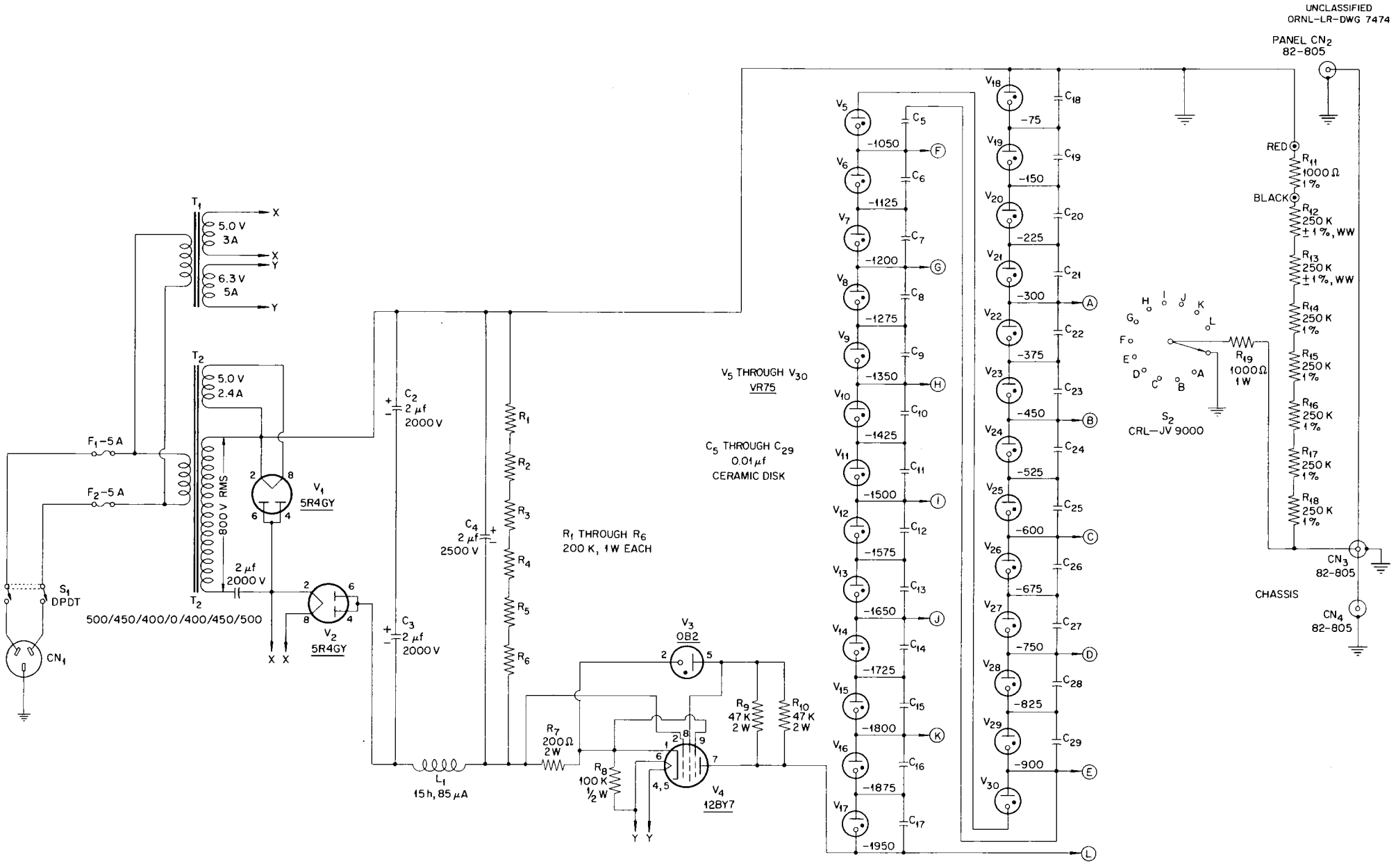

Fig. A-3. High Voltage Supply Circuit.

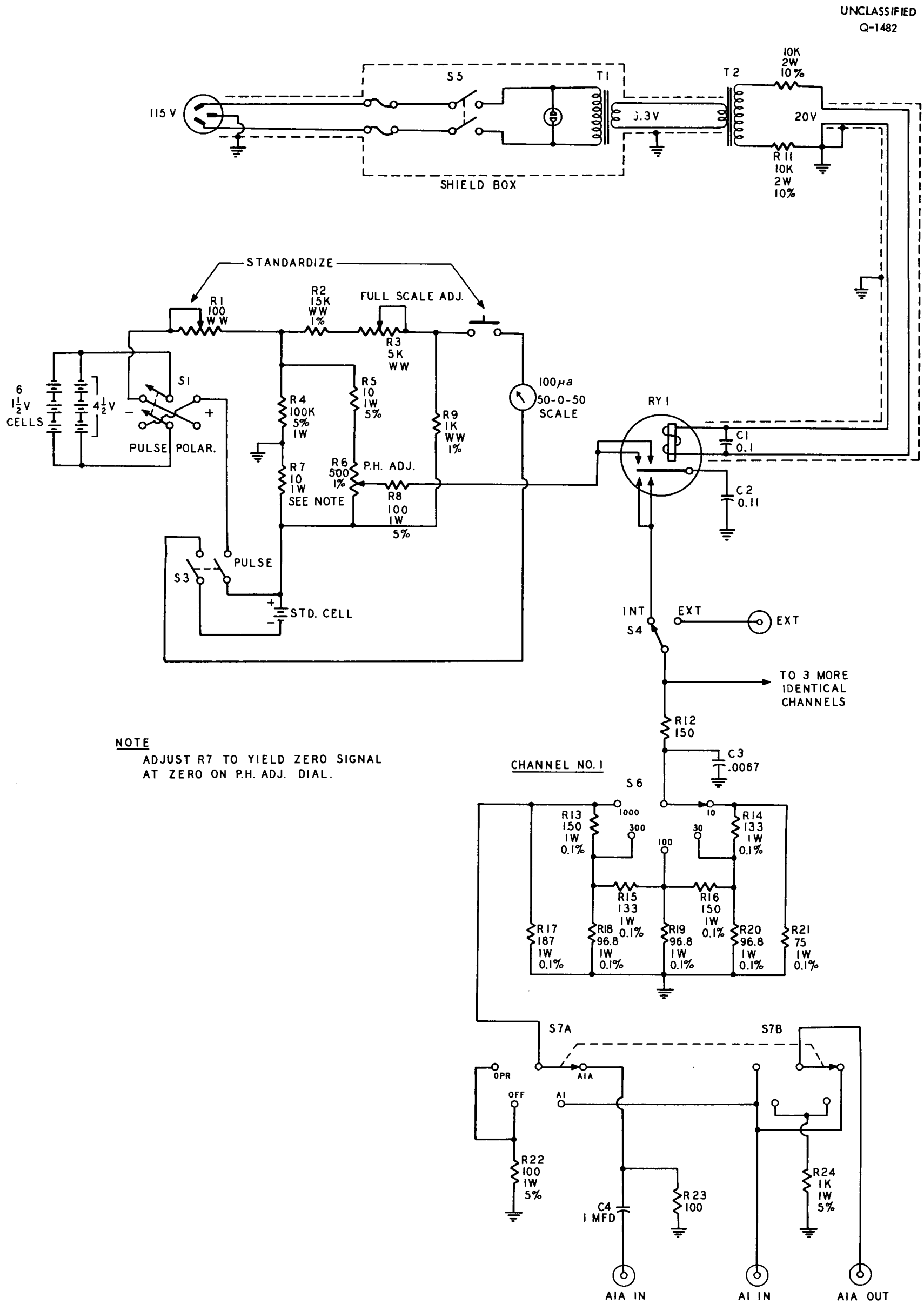

NOTE

ADJUST R7 TO YIELD ZERO SIGNAL AT ZERO ON P.H. ADJ. DIAL.

Fig. A-4. 4-Channel Precision Pulser Circuit.

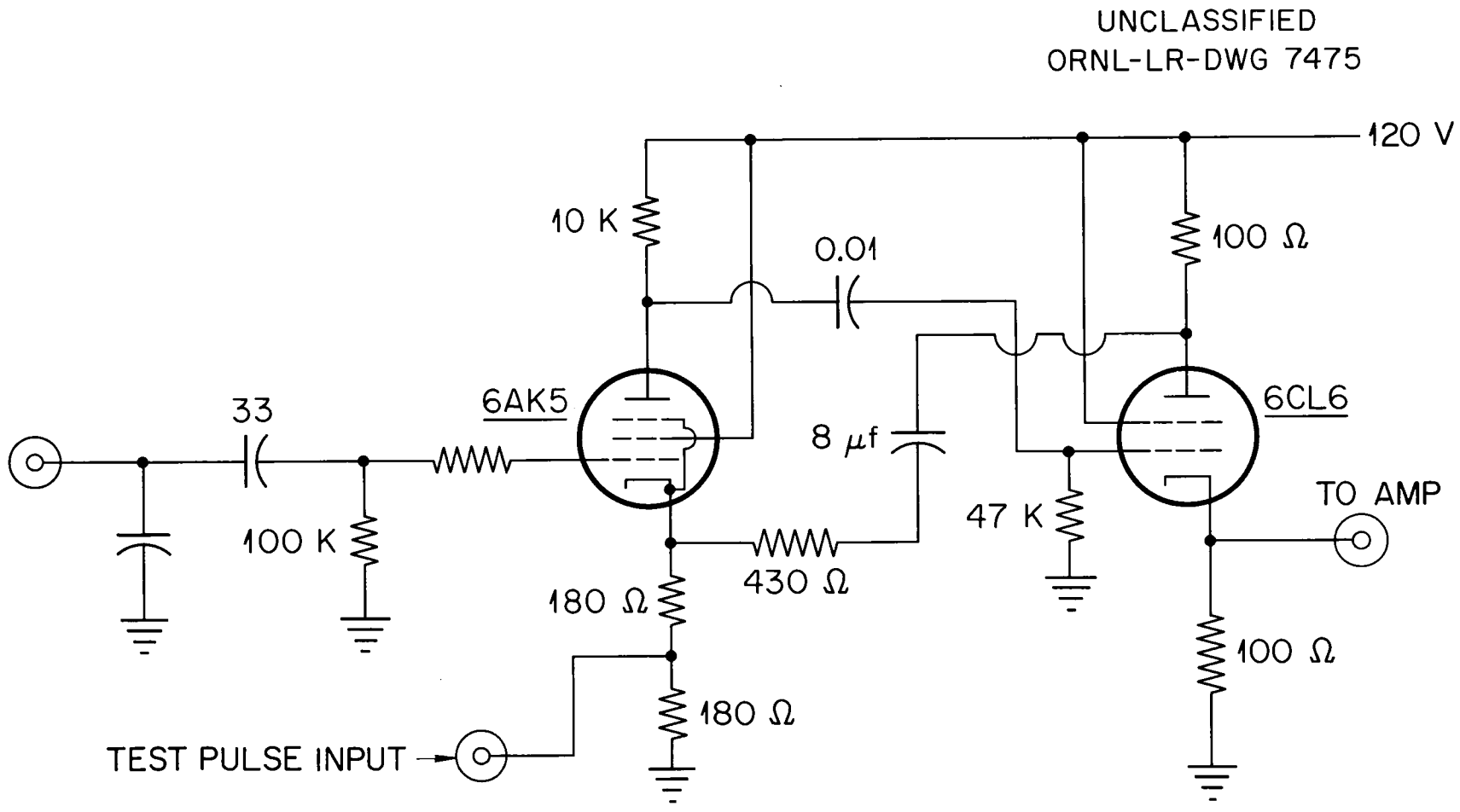

Fig. A-5a. Preamplifier for the Photomultiplier.

UNCLASSIFIED
Q-1178-1D

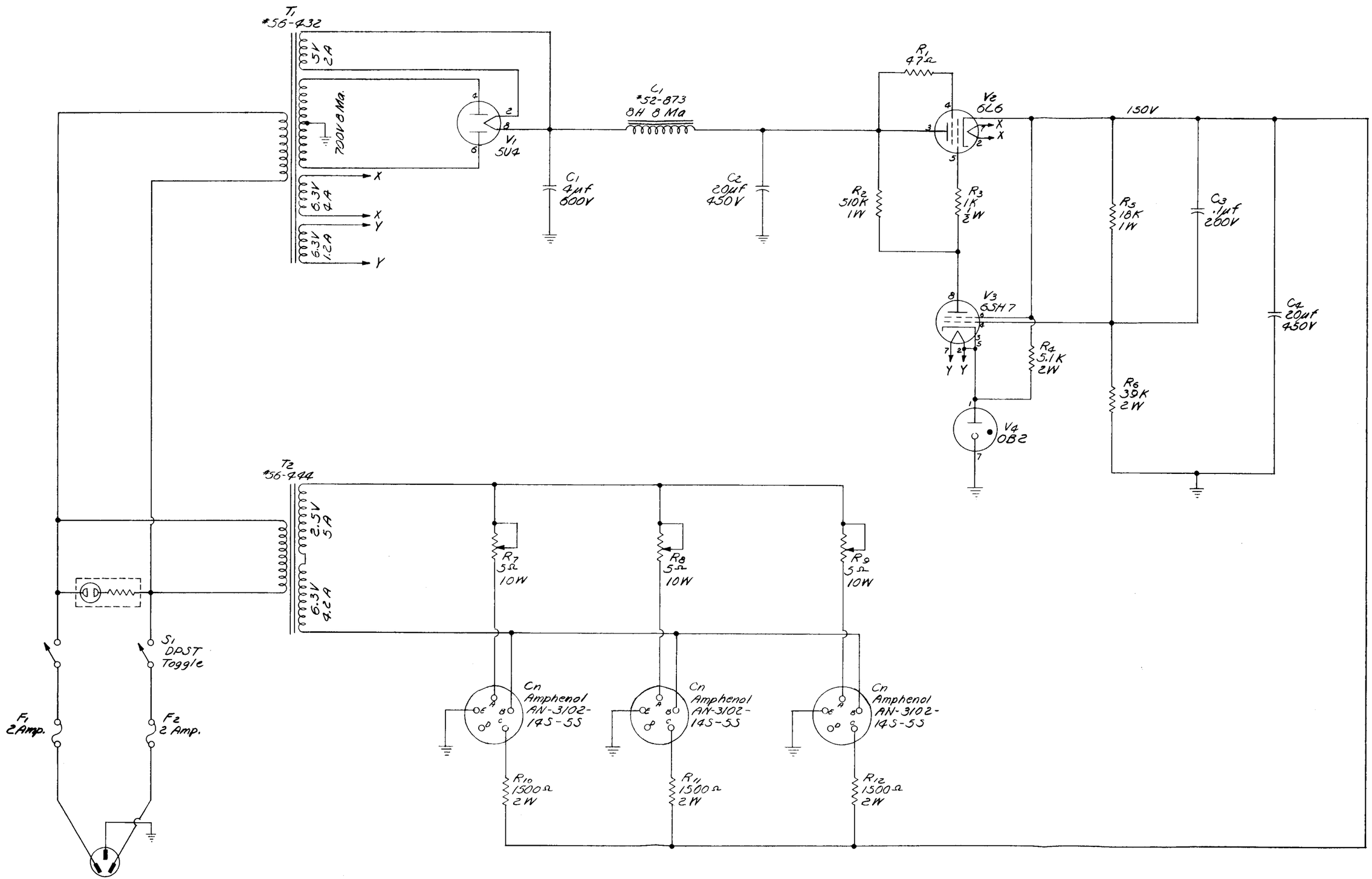

Fig. A-5b. Preamplifier Power Supply Circuit.

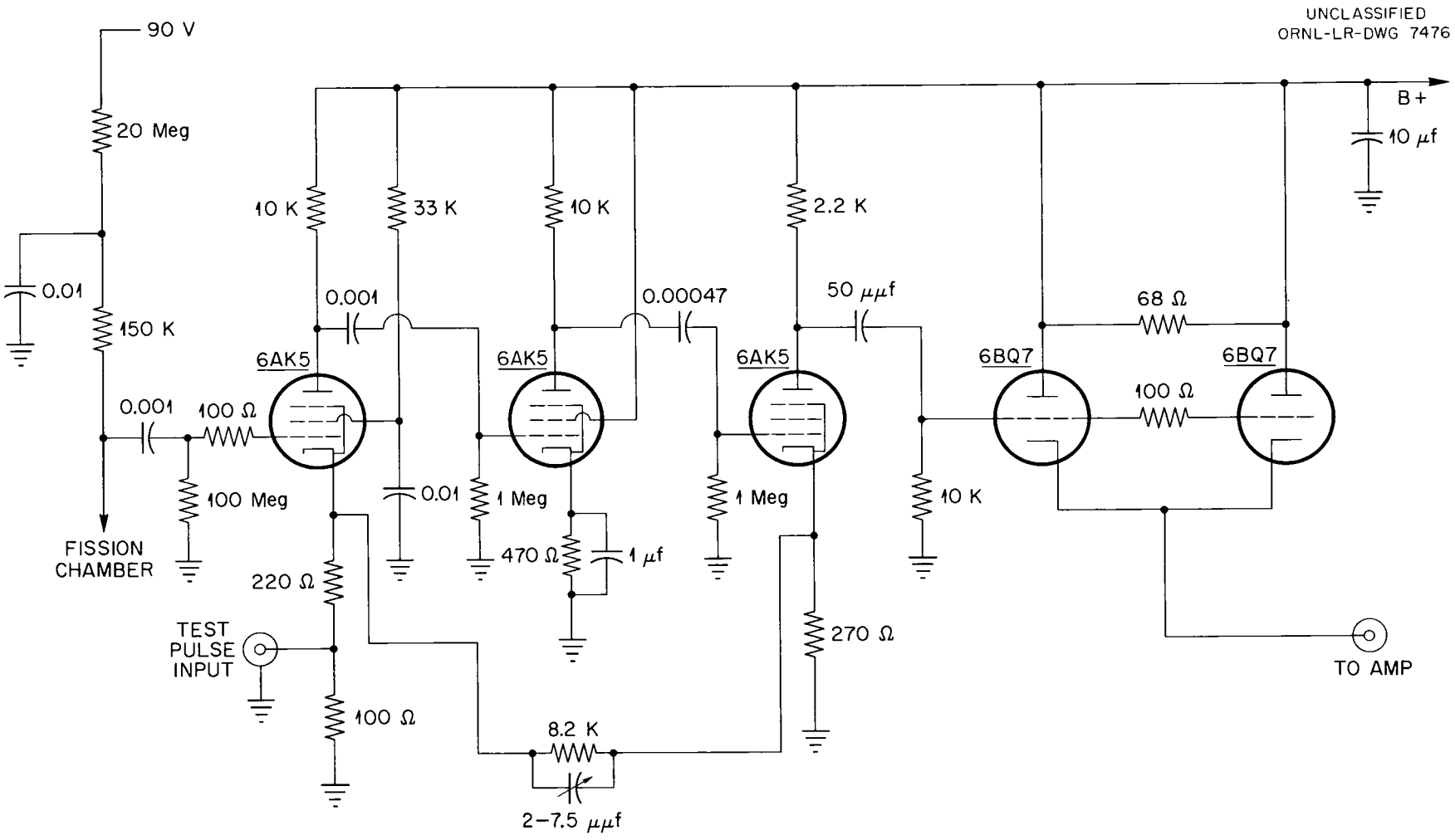

Fig. A-5c. Preamplifier for the Fission Chamber.

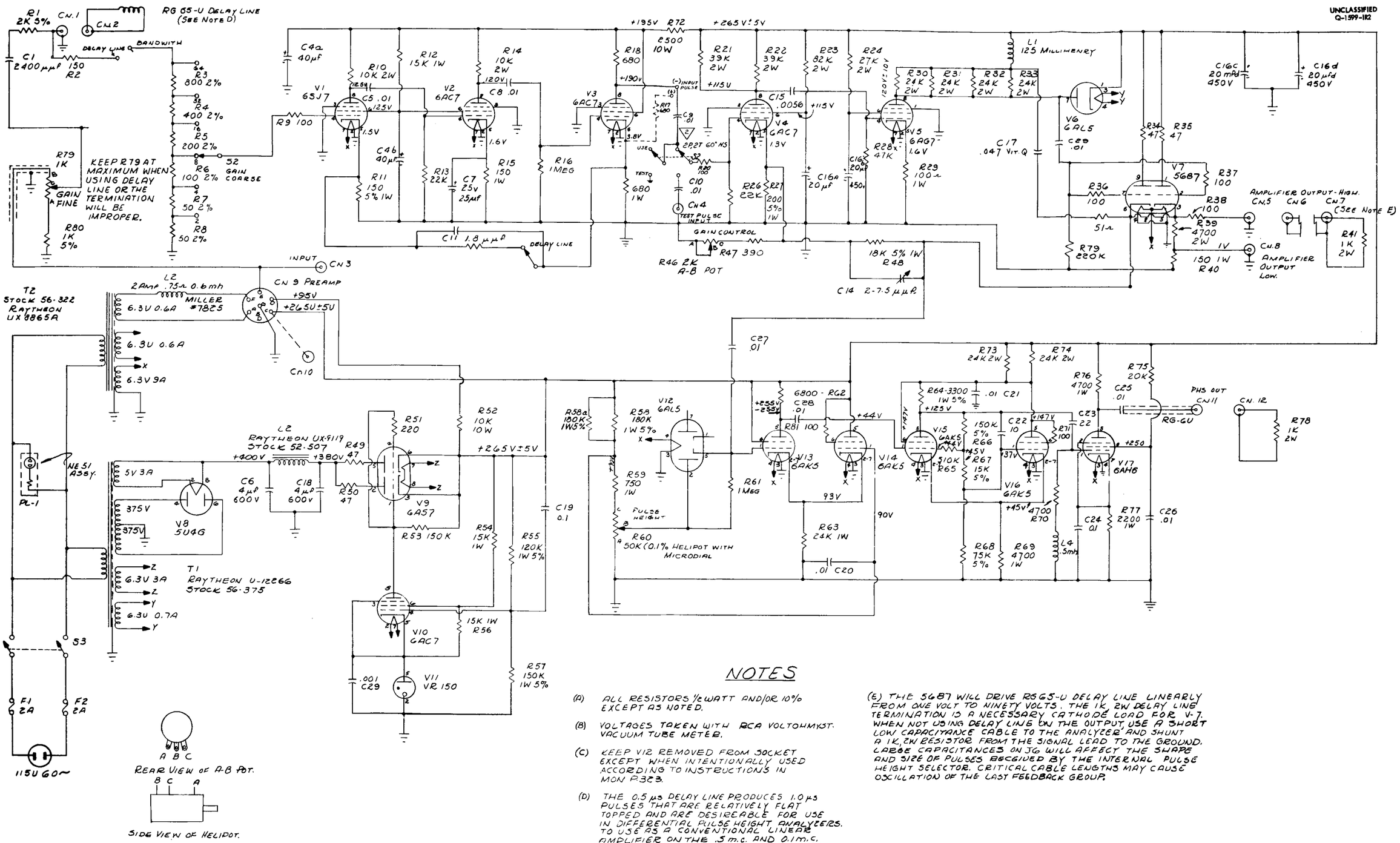

NOTES

(A) ALL RESISTORS ½ WATT AND/OR 10% EXCEPT AS NOTED.

(B) VOLTAGES TAKEN WITH RCA VOLTOHMYST. VACUUM TUBE METER.

(C) KEEP V12 REMOVED FROM SOCKET EXCEPT WHEN INTENTIONALLY USED ACCORDING TO INSTRUCTIONS IN MON P323.

(D) THE 0.5 μs DELAY LINE PRODUCES 1.0 μs PULSES THAT ARE RELATIVELY FLAT TOPPED AND ARE DESIREABLE FOR USE IN DIFFERENTIAL PULSE HEIGHT ANALYZERS. TO USE AS A CONVENTIONAL LINEAR AMPLIFIER ON THE .5 m.c. AND 0.1 m.c. BANDWIDTHS DISCONNECT THE DELAY LINE. SEE Q1326-12 FOR ASSEMBLY DETAILS.

(E) THE 5687 WILL DRIVE RG65-U DELAY LINE LINEARLY FROM ONE VOLT TO NINETY VOLTS. THE 1K, 2W DELAY LINE TERMINATION IS A NECESSARY CATHODE LOAD FOR V-7. WHEN NOT USING DELAY LINE ON THE OUTPUT USE A SHORT LOW CAPACITANCE CABLE TO THE ANALYZER AND SHUNT A 1K, 2W RESISTOR FROM THE SIGNAL LEAD TO THE GROUND. LARGE CAPACITANCES ON J6 WILL AFFECT THE SHAPE AND SIZE OF PULSES RECEIVED BY THE INTERNAL PULSE HEIGHT SELECTOR. CRITICAL CABLE LENGTHS MAY CAUSE OSCILLATION OF THE LAST FEEDBACK GROUP.

Fig. A-6. Linear Amplifier with Delay Line Differentiation.

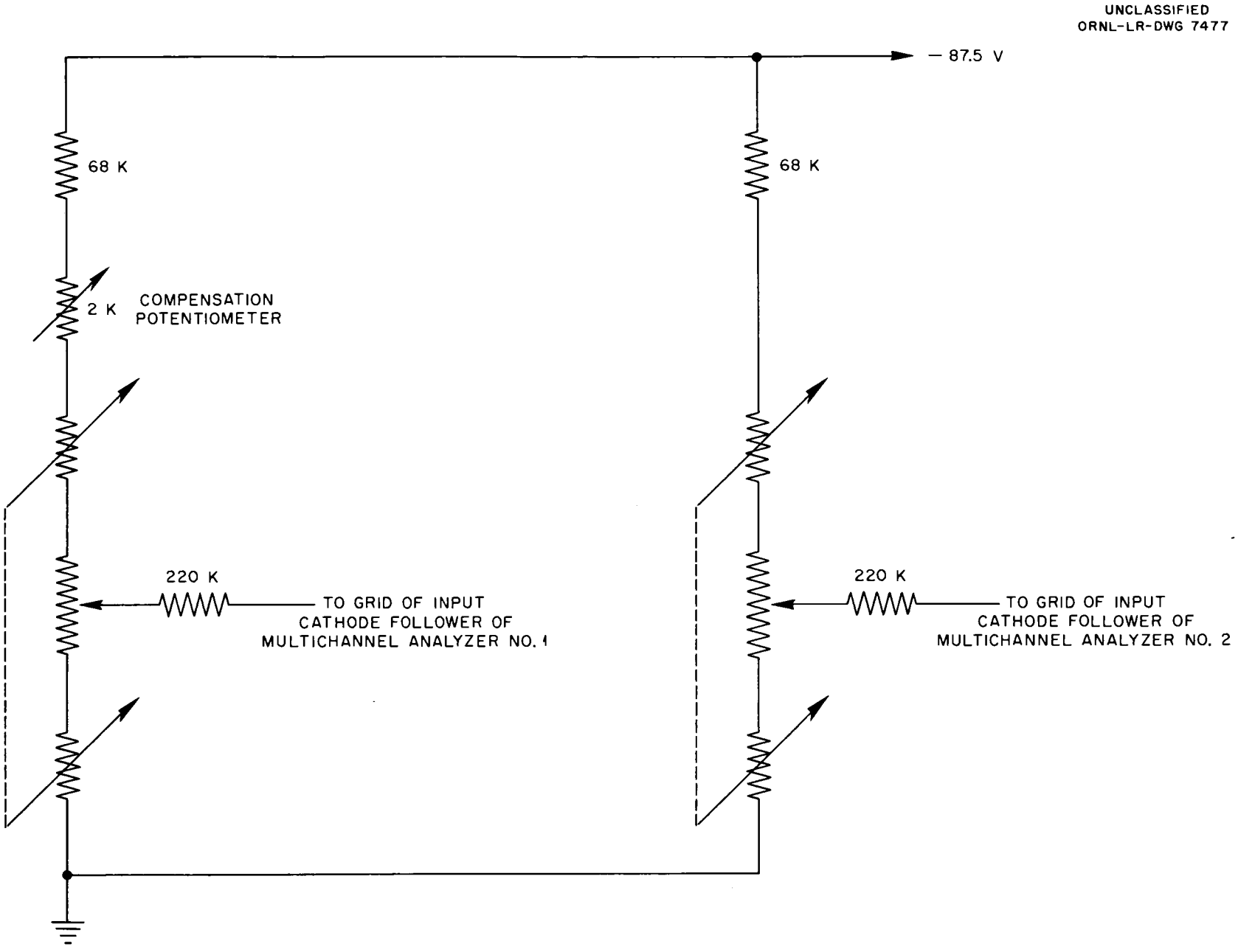

Fig. A-7. Circuit Used to Tie Two 20-Channel Analyzers Together.

UNCLASSIFIED
Q-1450L-1

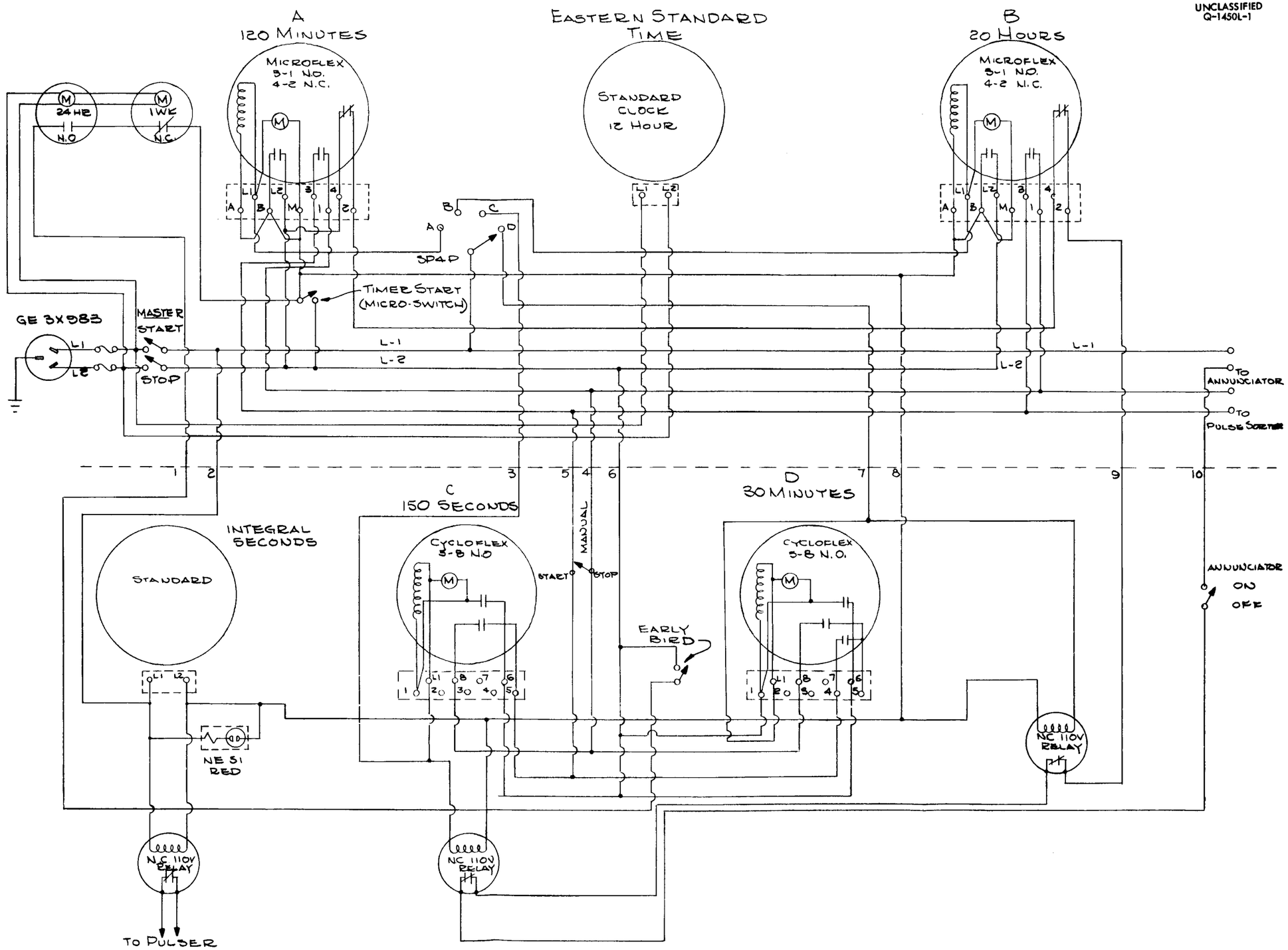

Fig. A-8. 20-Channel Analyzer Timer Circuit.

UNCLASSIFIED
Q-1573-2D

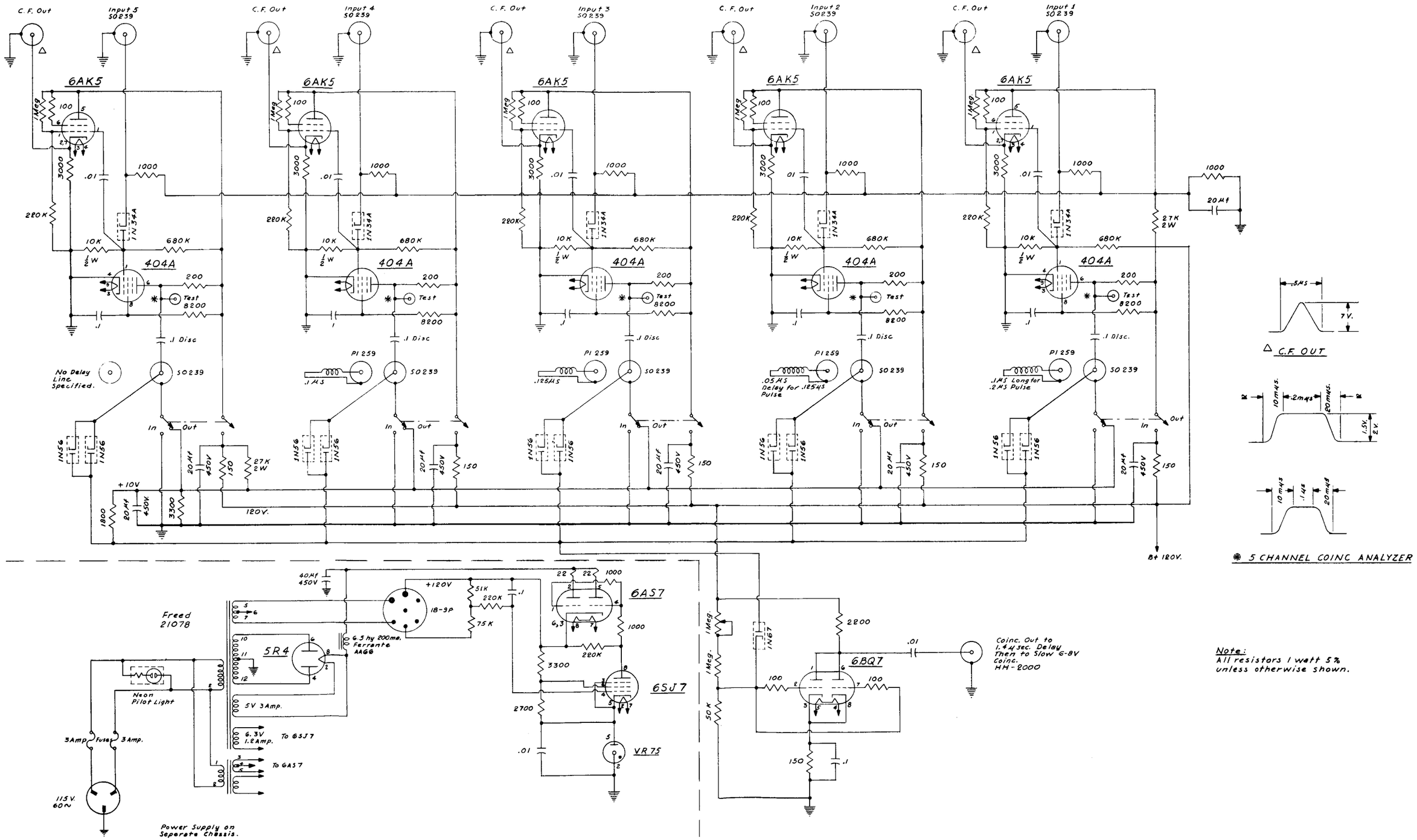

Note:
All resistors 1 watt 5% unless otherwise shown.

Fig. A-9. Multicoincidence Analyzer Intermediate Unit Circuit.

UNCLASSIFIED
Q-1573-3D

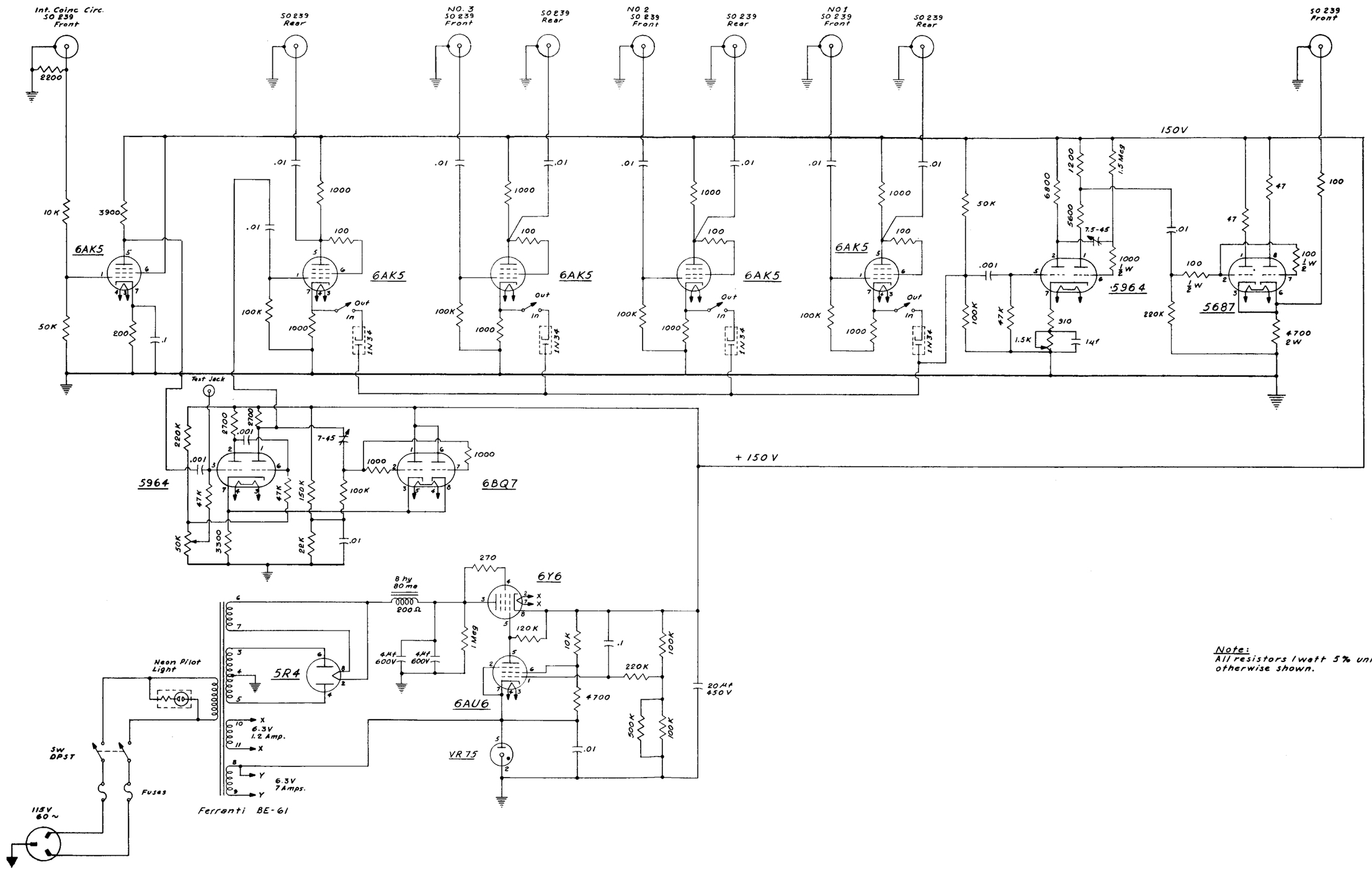

Note:
All resistors 1 watt 5% unless otherwise shown.

Fig. A-10. Multicoincidence Analyzer Slow Unit Circuit.

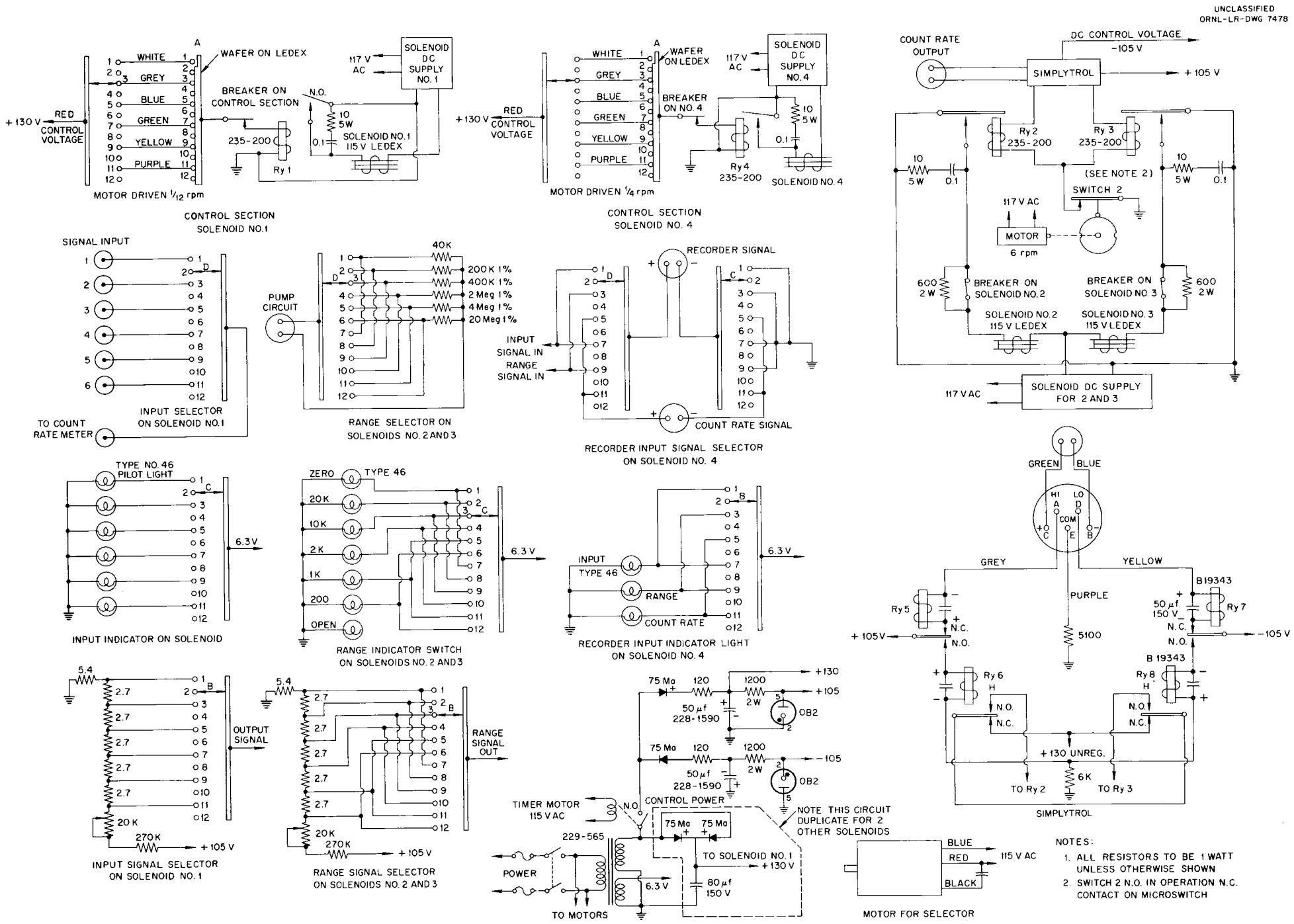

Fig. A-11. Automatic Data Taker Circuit.

UNCLASSIFIED
Q-1511-1R3

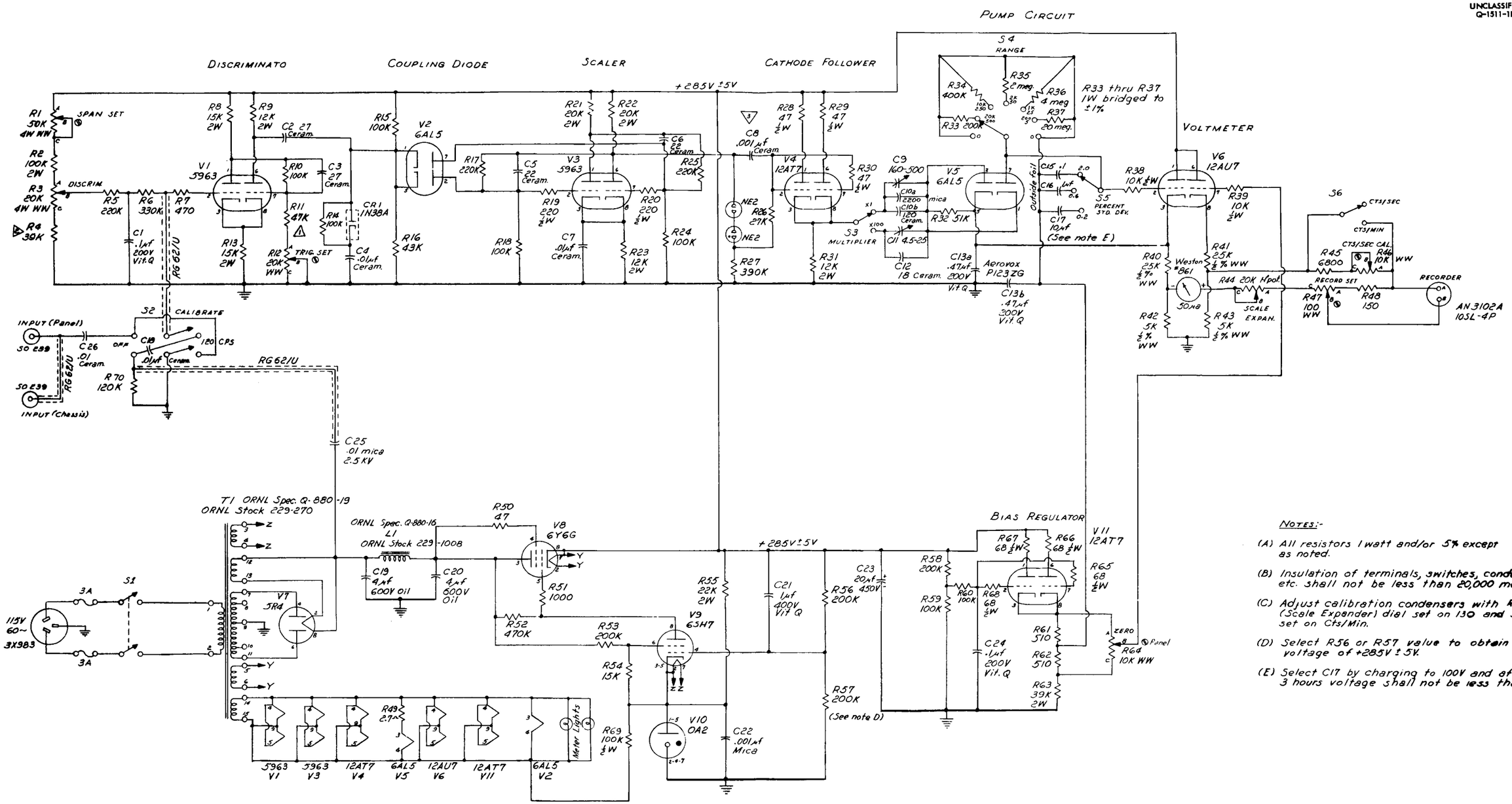

NOTES:-

(A) All resistors 1 watt and/or 5% except as noted.

(B) Insulation of terminals, switches, condensers, etc. shall not be less than 20,000 meg.

(C) Adjust calibration condensers with R44 (Scale Expander) dial set on 130 and S6 set on Cts/Min.

(D) Select R56 or R57 value to obtain B+ voltage of +285V ± 5V.

(E) Select C17 by charging to 100V and after 3 hours voltage shall not be less than 65V.

Fig. A-12. Linear Count Rate Meter Circuit.