UNCLASSIFIED

CENTRAL RESEARCH LIBRARY
DOCUMENT COLLECTION

MARTIN MARIETTA ENERGY SYSTEMS LIBRARIES
3 4456 0360997 7

cy 1

ORNL-1939
Physics

HERMETICALLY SEALED HIGH-TEMPERATURE PRESSURE TRANSMITTER AND HERMETICALLY SEALED HIGH-TEMPERATURE LIQUID-LEVEL PROBE

M. T. Morgan

CENTRAL RESEARCH LIBRARY
DOCUMENT COLLECTION
LIBRARY LOAN COPY
DO NOT TRANSFER TO ANOTHER PERSON
If you wish someone else to see this document, send in name with document and the library will arrange a loan.

OAK RIDGE NATIONAL LABORATORY
OPERATED BY
UNION CARBIDE NUCLEAR COMPANY
A Division of Union Carbide and Carbon Corporation
UCC
POST OFFICE BOX P · OAK RIDGE, TENNESSEE

UNCLASSIFIED

UNCLASSIFIED

ORNL - 1939
Copy No. 4

Contract No. W-7405-eng-26

SOLID STATE DIVISION

HERMETICALLY SEALED HIGH-TEMPERATURE PRESSURE TRANSMITTER AND HERMETICALLY SEALED HIGH-TEMPERATURE LIQUID-LEVEL PROBE

M. T. Morgan

Date Issued:

AUG 29 1955

OAK RIDGE NATIONAL LABORATORY
Operated by
UNION CARBIDE NUCLEAR COMPANY
A Division of Union Carbide and Carbon Corporation
Post Office Box P
Oak Ridge, Tennessee

3 4456 0360997 7

INTERNAL DISTRIBUTION

1. C. E. Center
2. Biology Library
3. Health Physics Library
4-5. Central Research Library
6. Reactor Experimental Engineering Library
7-11. Laboratory Records Department
12. Laboratory Records, ORNL R.C.
13. C. E. Larson
14. L. B. Emlet (K-25)
15. J. P. Murray (Y-12)
16. A. M. Weinberg
17. E. H. Taylor
18. E. D. Shipley
19. D. S. Billington
20. F. C. VonderLage
21. W. H. Jordan
22. C. P. Keim
23. J. A. Lane
24. J. H. Frye, Jr.
25. R. S. Livingston
26. J. A. Swartout
27. S. C. Lind
28. F. L. Culler
29. A. H. Snell
30. A. Hollaender
31. M. T. Kelley
32. G. H. Clewett
33. K. Z. Morgan
34. T. A. Lincoln
35. A. S. Householder
36. C. S. Harrill
37. C. E. Winters
38. D. W. Cardwell
39. E. M. King
40. A. J. Miller
41. J. T. Howe
42. D. D. Cowen
43. R. A. Charpie
44. G. E. Boyd
45. O. Sisman
46. W. E. Brundage
47. M. T. Morgan
48. W. W. Parkinson
49. G. W. Keilholtz
50. J. C. Wilson
51. J. H. Crawford
52. H. G. MacPherson (consultant)
53. R. L. Sproull (consultant)
54. H. Brooks (consultant)
55. ORNL Document Reference Library, Y-12 Branch
56. M. J. Skinner

EXTERNAL DISTRIBUTION

57. R. F. Bacher, California Institute of Technology
58. R. N. Little, ANP Project Office, Fort Worth
59. Division of Research and Medicine, AEC, ORO
60-368. Given distribution as shown in TID-4500 under Physics category

DISTRIBUTION PAGE TO BE REMOVED IF REPORT IS GIVEN PUBLIC DISTRIBUTION

TABLE OF CONTENTS

		Page
ABSTRACT		1
HERMETICALLY SEALED HIGH-TEMPERATURE PRESSURE TRANSMITTER		
Design		2
Construction		2
Continuous Control and Recording System		3
HERMETICALLY SEALED HIGH-TEMPERATURE LEVEL PROBE		
Design		5
Test		6
LIST OF FIGURES		
Fig. 1	Pressure Transmitter Cell	3
Fig. 2	Pressure Transmitter, Exploded View	3
Fig. 3	Electrical Control System for Pressure Transmitter	5
Fig. 4	Flow Recording System	6
Fig. 5	Control Panel for Pressure Transmitter	7
Fig. 6	Recovery Curve for Pressure Transmitter	10
Fig. 7	Schematic Diagram of Liquid-Level Probe	10
Fig. 8	Probe Housing	11
Fig. 9	Liquid-Level Probe	11

ABSTRACT

A hermetically sealed null-type pressure transmitter had been developed and tested for use at temperatures up to 1600°F. Continuous control and recording is possible by the use of an electrical control panel. The transmitter is accurate to ± 0.1 psi operating at pressures up to 50 psi. Process fluid volume in the measuring chamber is less than 2 cc.

A hermetically sealed liquid-level probe has been designed using two thermocouples opposed in a series circuit as the sensing element. The probe was tested at an operating temperature of 1350°F and was found to have a response time of less than two seconds.

HERMETICALLY SEALED HIGH-TEMPERATURE PRESSURE TRANSMITTER

Design

The transmitter consists of a cell with two chambers separated by a diaphragm (Fig. 1).* The process chamber contains the fluid or gas to be measured, and the control chamber contains helium gas which transmits the pressure to an external gage or recorder. A pressure differential between the process chamber and the control chamber moves the diaphragm slightly and causes electrical contacts at the center of the diaphragm to open or close according to the direction of the pressure differential. The electrical circuit through the contacts controls a relay-operated, motor-driven gas pressure regulator, reversing the direction of the pressure differential. Continuous adjustment of the control-chamber pressure produces an oscillation of the diaphragm about a balance position. The pressure oscillation required to open and close the contacts is less than 0.05 psi when an ohmmeter is used for an indicator and the control pressure is adjusted by hand. Helium gas is used in the control chamber to prevent oxidation of the contacts.

Construction

The cell (Fig. 2) was constructed entirely of Inconel except for the electrical contacts. All seams were welded. The diaphragm was of 10-mil Inconel. The corrugations were first machined in the base and diaphragm support and then the diaphragm was formed by pressing it between the base and a rubber mat. The hole was drilled for the process-fluid inlet tube after the above operation. The contact, made of 10-mil platinum, was spot welded to the diaphragm, and was carefully polished before the diaphragm was assembled to the body. The movement of the diaphragm is restricted to less than 0.030 in. at the center between the base

---

* A pressure transmitter of a similar type, but for lower temperatures with a different control system is described in report number MDDC-803, Technical Information Branch, Oak Ridge.

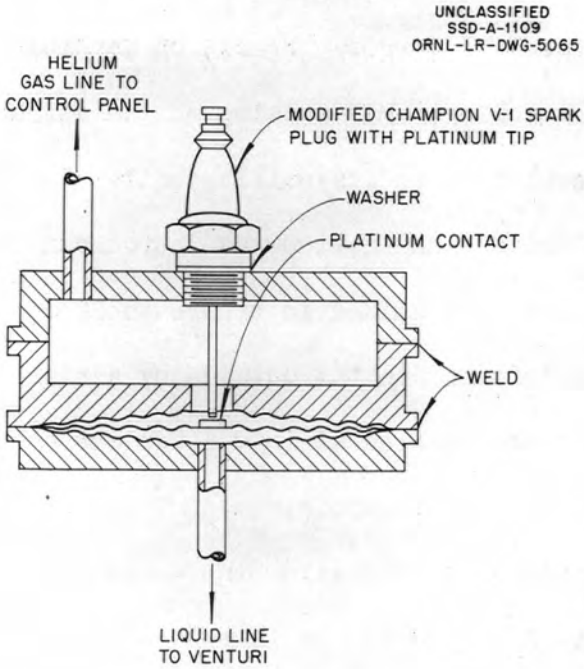

Fig. 1. Pressure Transmitter Cell.

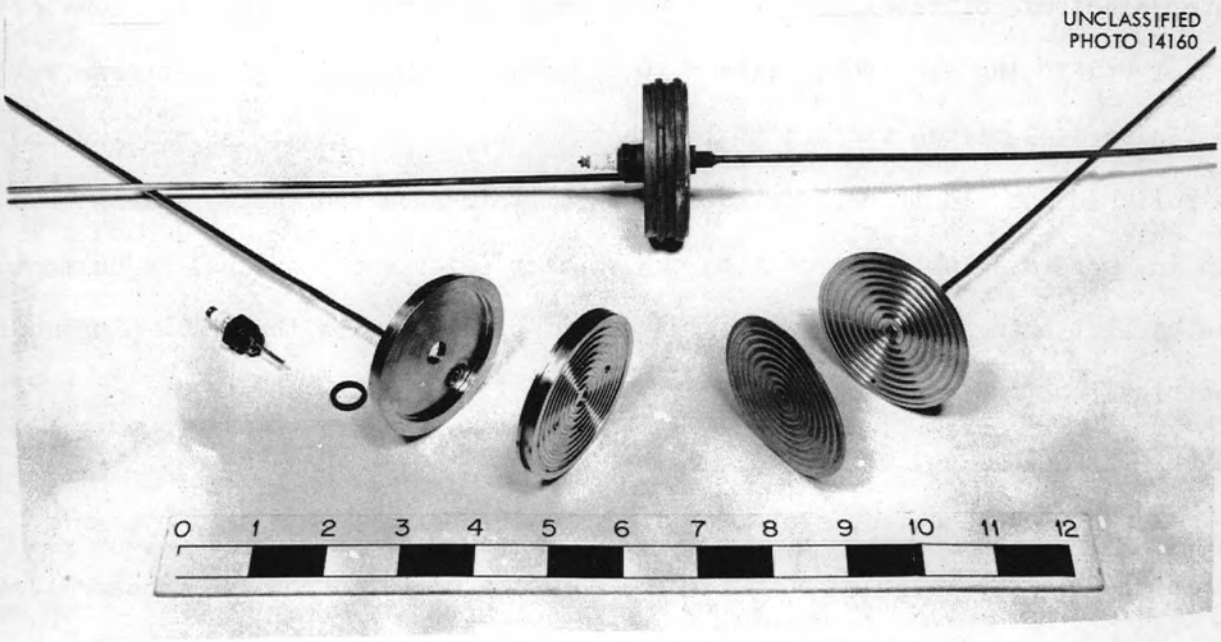

Fig. 2. Pressure Transmitter.

and diaphragm support. This prevents permanent damage to the diaphragm in case of large differential-pressure surges. Precision machining of the corrugations was required to insure matching. Mismatching of the corrugations causes binding of the diaphragm and results in an insensitive unit. The transmitters were welded with an inert-gas shielded arc and helium was introduced to the inside of the cell during welding. The tubes were welded in before the body was assembled and the tube-to-base weld was reinforced on the outside by a nickel-gold alloy braze. Each transmitter was stress annealed at 1600°F for one hour with helium in both chambers before installing the electrode.

Precision-screw methods of adjusting the contact points were tried and discarded after repeated seizures of the threads at high temperatures. The final design consisted of a modified Champion V-1 model-aircraft spark plug, adjusted by varying the thickness of a solid, soft copper gasket under the shoulder. The center electrode of the spark plug was extended by welding a 1/16 in. diameter Inconel rod to the electrode (with a 10,000-mfd, 105-v condenser-discharge welder). The finished electrode was cut to length to match each transmitter and the end was polished for electrical contact. Several thicknesses of copper gaskets up to 1/16 in. were available to position the contact point and the final adjustment was made by flattening a slightly oversize gasket by tightening the spark plug until electrical contact was made.

Continuous-Control and Recording System

A continuous-control system is diagrammed in Fig. 3. In this system a sensitive relay operates a motor-control relay on signals from the pressure transmitter, thereby controlling the control-chamber pressure by means of a motor-driven pressure regulator. A dual system with venturi for flow measurement and recording is shown in Figs. 4 and 5.

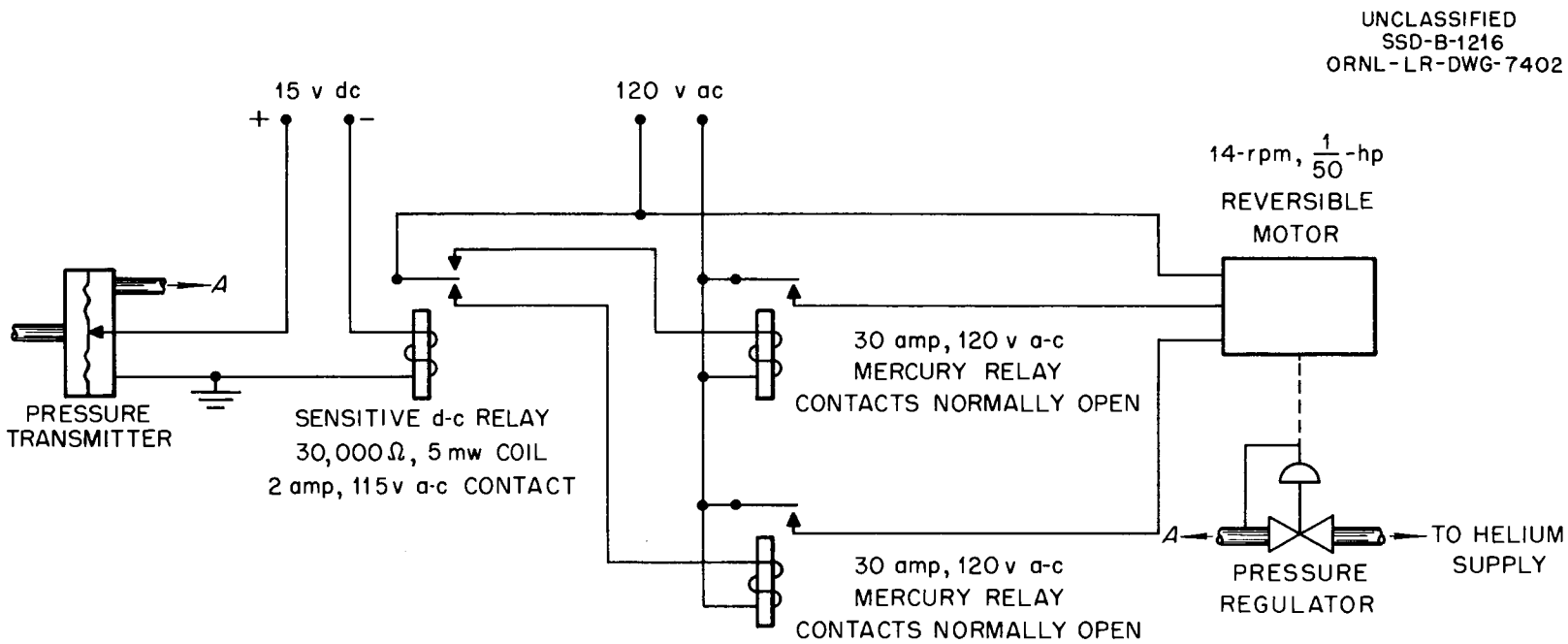

Fig. 3. Electrical Control System for Pressure Transmitter.

UNCLASSIFIED
SSD-B-1220
ORNL-LR-DWG-7518

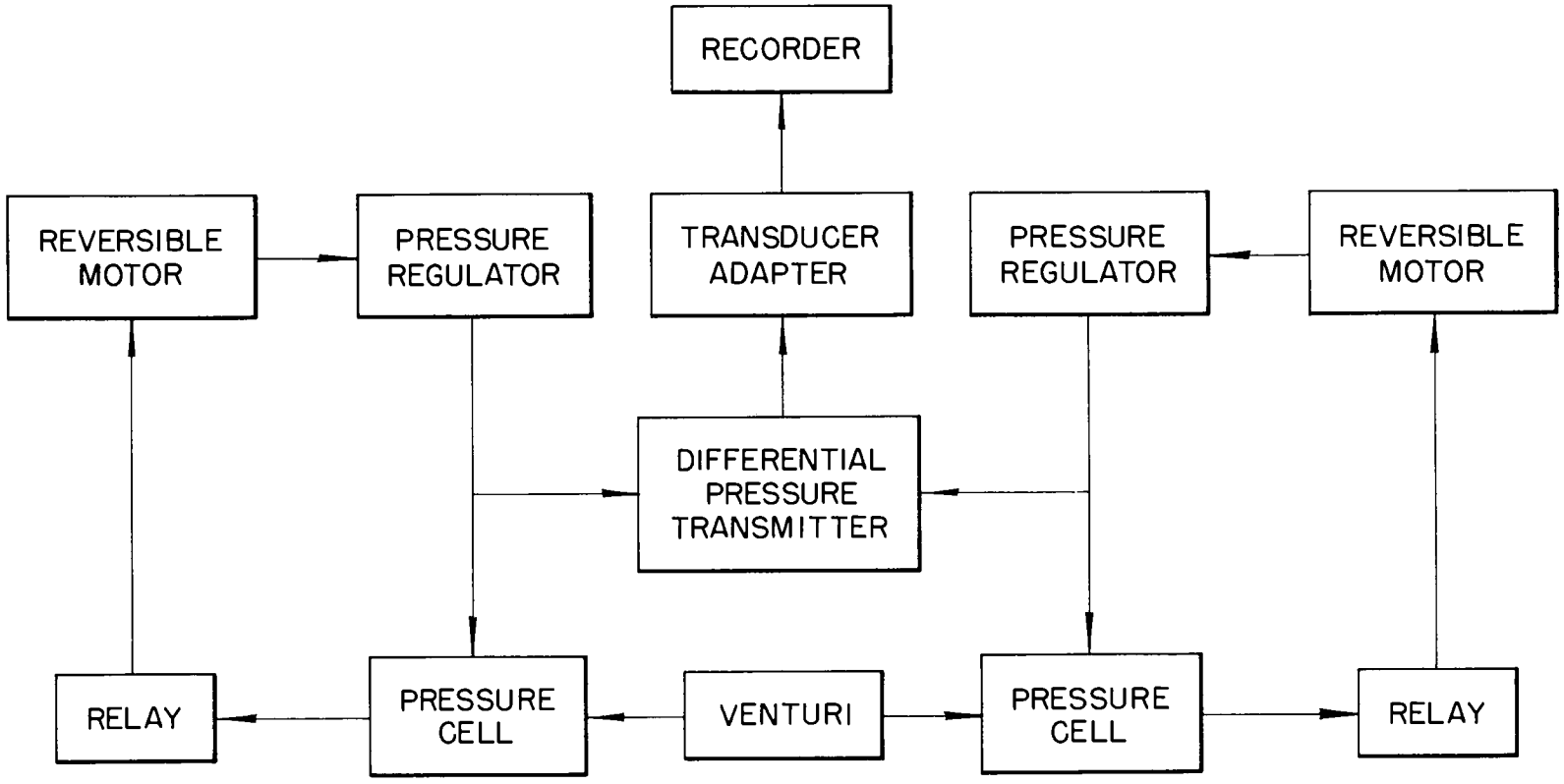

Fig. 4. Flow Recording System.

UNCLASSIFIED
PHOTO 14159

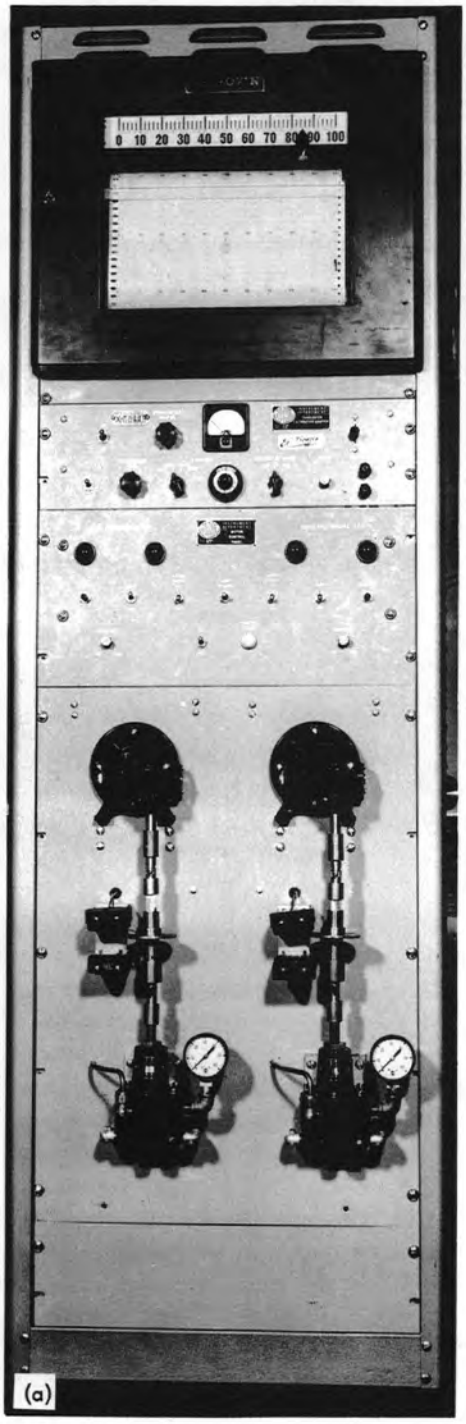

UNCLASSIFIED
PHOTO 14632

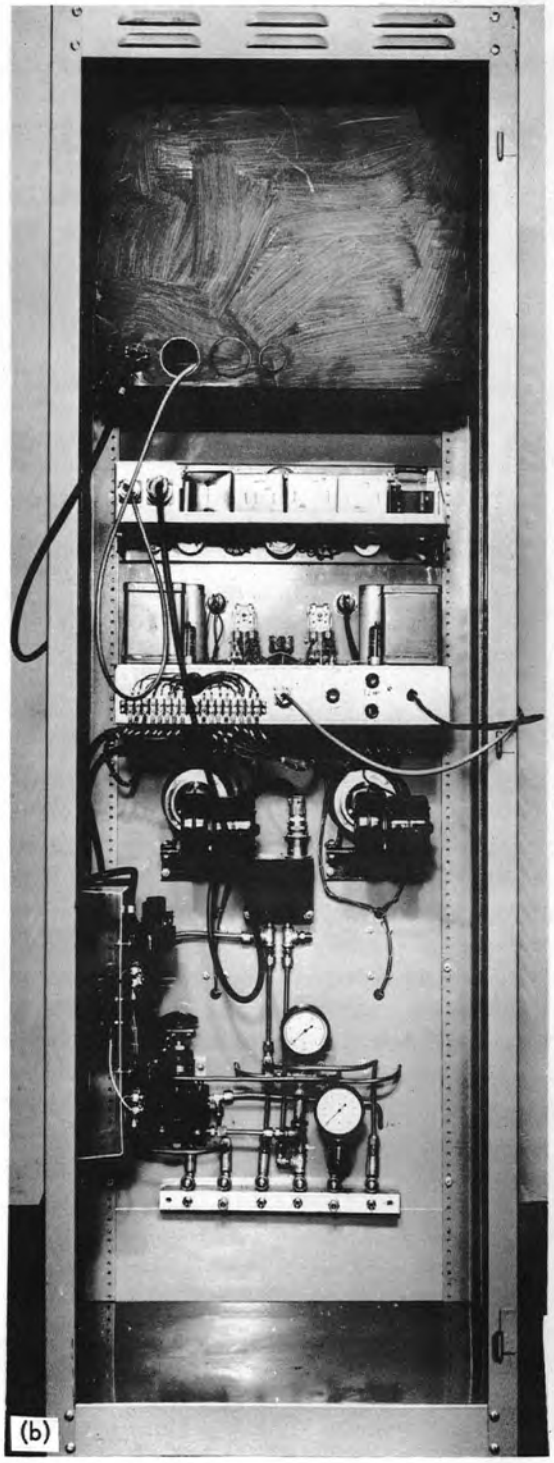

Fig. 5. Control Panel for Pressure Transmitter.

A hand-adjusted pressure regulator was modified for continuous adjustment by replacing the hand adjustment screw and nut with an oil-bearing bronze nut and a hardened-steel screw. The regulator adjustment screw was connected to a 1/50-hp, 14-rpm reversible motor by means of universal joints to facilitate alignment. Limit switches were installed on the joint to prevent the motor from overdriving the screw in either direction in case of contact or relay failure. An electronic relay with an input impedance of approximately 10,000 ohms was used on the first models to drive the motor control relay. Later a sensitive electromagnetic relay was used. Excessive voltage on the transmitter contacts affected the sensitivity of the unit apparently causing sticking. This was very noticeable above 30 volts. High input-impedance relays caused trouble because of conductance through the insulation on the wire leading to the transmitter. Light-duty relays were tried for motor control, but failed due to the overload caused by the sudden reversal of the motor. Mercury relays gave no trouble in the final design. Blowers were installed on the motors to prevent overheating by the continual reversing of direction.

During operation with the control panel, an oscillation of pressure is produced which is several times the width of the pressure oscillation actually required. The average of the oscillation is used to indicate the process pressure and although the oscillation of the system used in flow measurement was 0.4 psi, the pressure could be estimated to within ± 0.2 psi.

A pressure differential between the chambers of less than 0.4 psi was maintained by the control panel as long as the process pressure changed at less than 1.1 psi per second. This factor and the oscillation of the system are affected by the motor speed, the inertia of the system, and the range of the pressure regulator. The pressure regulator used for these tests had a 50-psi range. A previous model panel with a range of 15 psi had an oscillation of less than 0.1 psi.

Three transmitters were tested for approximately one month each with corrosive liquids at 1300 to 1600°F without change in accuracy. An accuracy within ± 0.1 psi was maintained with variations of temperature from 1000 to 1600°F and at pressures up to 50 psi. Differential pressure between the control chamber and the measuring chamber of more than 2 psi for up to 20 min caused temporary drifts of less than 1 psi, requiring up to one hour for complete recovery (Fig. 6). Longer periods of large differential pressures might possibly injure the transmitter accuracy by shifting the null point.

HERMETICALLY SEALED HIGH-TEMPERATURE LIQUID-LEVEL PROBE

Design

Liquid level in a vessel can be detected by sensing the temperature change on a probe which is maintained at a different temperature than the liquid. Such a device can be hermetically sealed into the vessel and has the advantage over an electrical contact that the probe need not be insulated from the vessel. It can be used on non-conducting as well as conducting liquids.

A heater was used to maintain a differential temperature between the probe and the liquid (Fig. 7). The probe was operated at a higher temperature than the liquid rather than use a cooling coil since this could freeze high-melting-point liquids and produce an insulating layer around the probe. Two thermocouples were connected so as to measure the change in differential temperature between the top and the bottom of the active length of the probe when liquid contacted or left the probe.

The probe was assembled in an Inconel housing (Fig. 8). The heater was a helix of platinum wire and measured 3/8 in. long x 1/32 in. O.D. Thin quartz tubing was drawn to fit over the heater and lead wires for insulation. The thermocouples were of platinum and platinum-13%-rhodium. Lead C, Fig. 7, was used

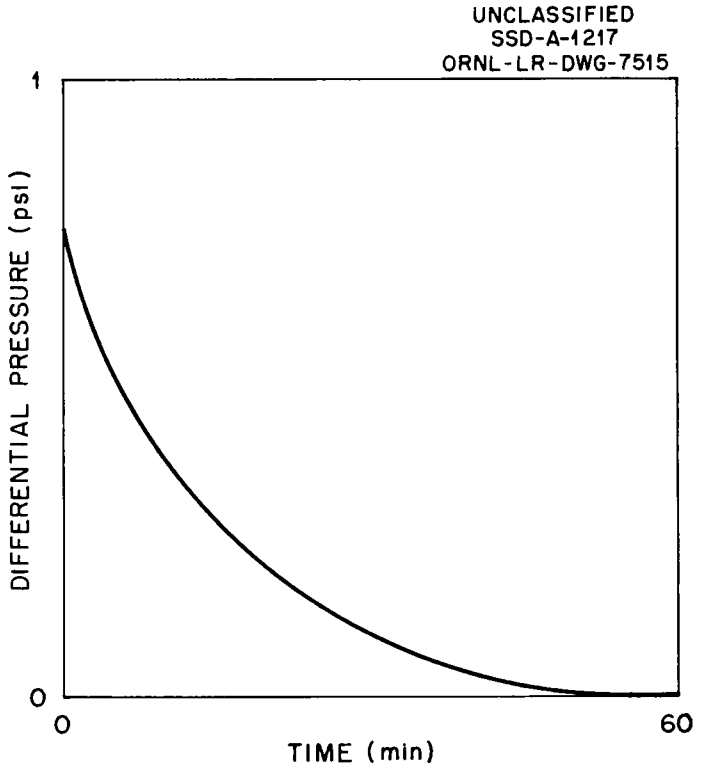

Fig. 6. Typical Recovery of Pressure Transmitter After Differential Pressure of 5 psi for 20 min at 1500°F.

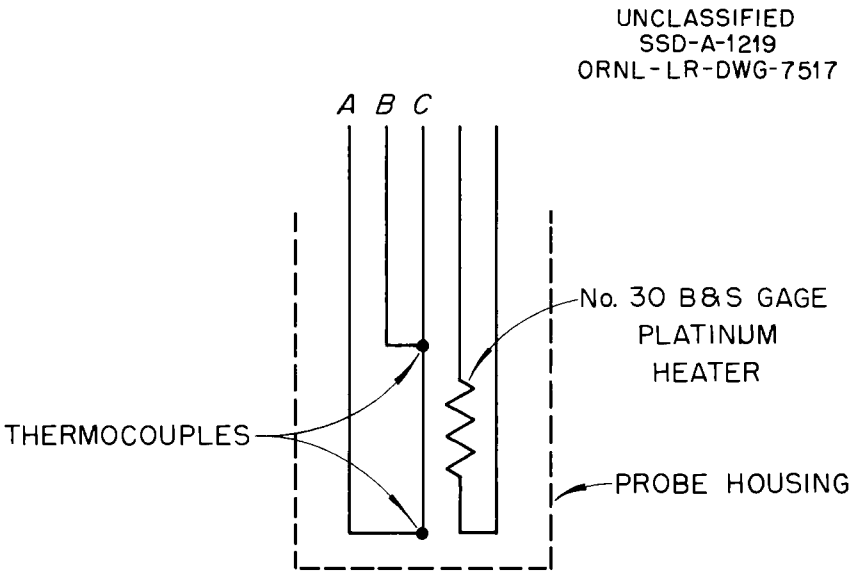

MATERIAL:

A PLATINUM, No. 38 B&S GAGE

B PLATINUM, No. 38 B&S GAGE

C PLATINUM-13% RHODIUM, No. 30 B&S GAGE

Fig. 7. Schematic Diagram of Liquid-Level Probe.

UNCLASSIFIED
SSD-A-1218
ORNL-LR-DWG-7516

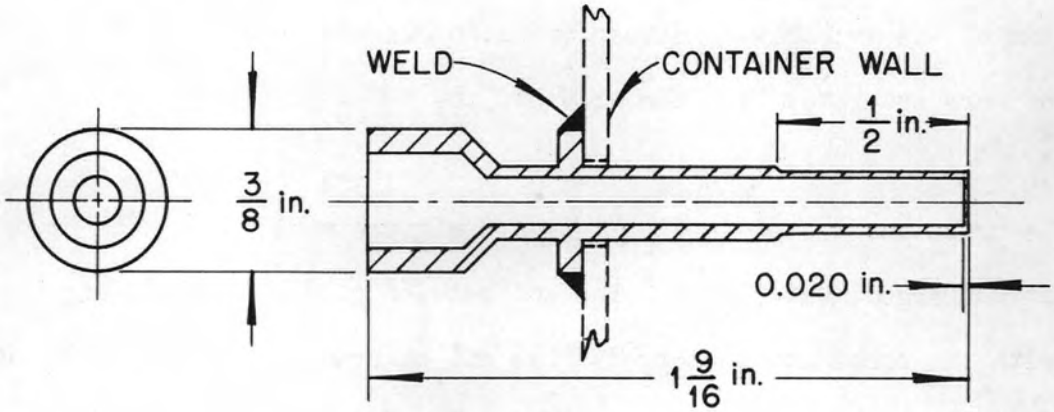

Fig. 8. Probe Housing.

UNCLASSIFIED
PHOTO 14633

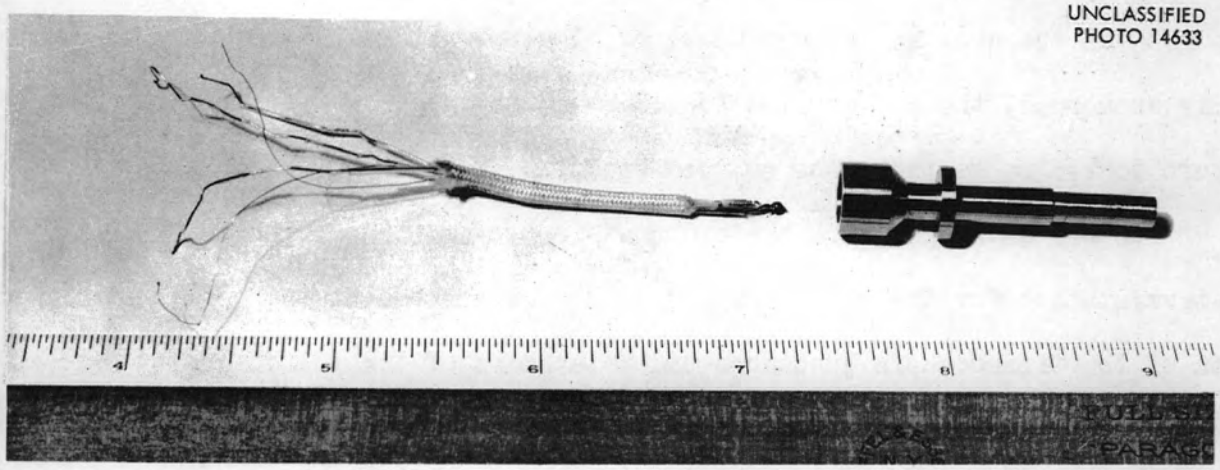

Fig. 9. Liquid Level Probe.

with Lead A to measure the probe temperature. The upper section of the probe containing the lead wires was insulated from the tube by quartz-fiber sleeving. The thermocouple junctions were located respectively at the bottom and 3/8 in. from the bottom of the assembly. Neither thermocouple was welded to the tube and both junctions were insulated from the sides of the tube.

Test

The probe was tested in a molten-salt mixture at 1350°F. The probe temperature, not submerged, was 1770°F. The emf between points A and B, Fig. 7, was 7.5 mv with the probe not submerged. The emf changed to 4 mv in 2 sec when the liquid touched the tip of the probe. This change indicated that the bottom junction was hotter than the top junction and the colder liquid touching the probe brought the temperature of the junctions closer together. When the probe was fully submerged, the emf changed to 1.5 mv. The response time for the emf to return to 7.5 mv as the probe emerged from the liquid was 3 seconds.

Further development of the probe was not completed because of a change in instrumentation for the parent project, but design changes such as greater separation of the thermocouple junctions and attachment of the bottom junction to the shell should produce higher differentials and faster response times.