UNCLASSIFIED

CENTRAL RESEARCH LIBRARY
DOCUMENT COLLECTION

ORNL-1984
Chemistry

MARTIN MARIETTA ENERGY SYSTEMS LIBRARIES
3 4456 0361012 6

Cy. 4

DIBAN--ION EXCHANGE WASTE DISPOSAL SCHEME. I

I. R. Higgins
R. G. Wymer

CENTRAL RESEARCH LIBRARY
DOCUMENT COLLECTION
LIBRARY LOAN COPY
DO NOT TRANSFER TO ANOTHER PERSON
If you wish someone else to see this document, send in name with document and the library will arrange a loan.

OAK RIDGE NATIONAL LABORATORY
OPERATED BY
UNION CARBIDE NUCLEAR COMPANY
A Division of Union Carbide and Carbon Corporation
UCC
POST OFFICE BOX P · OAK RIDGE, TENNESSEE

UNCLASSIFIED

UNCLASSIFIED

Report Number: ORNL-1984

Copy No. 4

Contract No. W-7405, eng 26

CHEMICAL TECHNOLOGY DIVISION

Chemical Development Section

DIBAN—ION EXCHANGE WASTE DISPOSAL SCHEME I

I. R. Higgins

R. G. Wymer

DATE ISSUED

NOV 10 1955

OAK RIDGE NATIONAL LABORATORY
Operated by
UNION CARBIDE NUCLEAR COMPANY
A Division of
UNION CARBIDE AND CARBON CORPORATION
Post Office Box P
Oak Ridge, Tennessee

3 4456 0361012 6

UNCLASSIFIED

INTERNAL DISTRIBUTION

1. C. E. Center
2. Biology Library
3. Health Physics Library
4-5. Central Research Library
6. Reactor Experimental Engineering Library
7-18. Laboratory Records Department
19. Laboratory Records, ORNL R.C.
20. A. M. Weinberg
21. L. B. Emlet (K-25)
22. J. P. Murray (Y-12)
23. J. A. Swartout
24. E. H. Taylor
25-26. F. L. Culler
27. E. D. Shipley
28. F. C. VonderLage
29. W. H. Jordan
30. C. P. Keim
31. J. H. Frye, Jr.
32. S. C. Lind
33. A. H. Snell
34. A. Hollaender
35. M. T. Kelley
36. K. Z. Morgan
37. T. A. Lincoln
38. R. S. Livingston
39. A. S. Householder
40. C. S. Harrill
41. C. E. Winters
42. D. W. Cardwell
43. E. M. King
44. W. K. Eister
45. F. R. Bruce
46. D. E. Ferguson
47. H. K. Jackson
48. H. E. Goeller
49. D. D. Cowen
50. R. A. Charpie
51. J. A. Lane
52. M. J. Skinner
53. R. E. Blanco
54. G. E. Boyd
55. W. E. Unger
56. R. R. Dickison
57. E. E. Beauchamp
58. F. N. Browder
59. M. I. Goldman
60. I. R. Higgins
61. B. Kahn
62. H. L. Krieger
63. A. F. Rupp
64. C. P. Straub
65. E. G. Struxness
66. R. G. Wymer
67. ORNL Document Reference Library, Y-12 Branch

EXTERNAL DISTRIBUTION

68. R. F. Bacher, California Institute of Technology
69. Division of Research and Medicine, AEC, ORO
70-71. Brookhaven National Laboratory (1 copy ea. to L. P. Hatch and E. J. Tuthill)
72. Dow Chemical Company (Rocky Flats) (Attn: D. H. Stewart)
73-391. Given distribution as shown in TID-4500 under Chemistry category

DISTRIBUTION PAGE TO BE REMOVED IF REPORT IS GIVEN PUBLIC DISTRIBUTION

CONTENTS

		Page
0.0	ABSTRACT	1
1.0	INTRODUCTION	1
2.0	PROPOSED WASTE TREATMENT	2
3.0	FUTURE WORK REQUIRED	10
4.0	REFERENCES	13
5.0	APPENDIX	15

0.0 ABSTRACT

A scheme, based on experimental work, is proposed for decontaminating radioactive wastes whose chief ingredients are aluminum nitrate and nitric acid. Ninety percent of the niobium and more than 95% of the ruthenium and zirconium are removed by a ferric hydroxide—manganese dioxide scavenging precipitation. The aluminum nitrate is converted to dibasic aluminum nitrate by destructive distillation, and dissolved by a 12-hr digestion at 160°C. The strontium, cesium, and rare earths are removed by cation exchange in a continuous contactor. The decontaminated waste can be volume-reduced to about 6 M aluminum before disposal and then stored cheaply. The fission products can be eluted from the column, concentrated into a small volume of highly radioactive waste, and stored with all necessary precautions.

1.0 INTRODUCTION

Currently produced wastes present a major problem in handling and long-term storage. The large volumes of these extremely radioactive solutions require elaborate precautions, and correspondingly high expenditures, to ensure proper isolation. Of the many disposal schemes designed to help solve the waste problem (see Appendix), the best include complete separation of radioactive materials from the normally large amounts of inert bulk material. By such a separation, the volume of dangerously radioactive waste that must be stored annually may be reduced from the millions of gallons of solution required to hold the inert material to the comparatively very small volume required to store the radioactive materials alone. An impressive example of the contribution

of inerts to the mass of material in solution is found in aluminum-containing wastes. Before neutralization, this waste contains about 2.1 kg of aluminum nitrate and less than 1 g of fission products per gallon. The scheme proposed in this report is designed to accomplish the desired separation to a very high degree, and in a simple manner.

Since the quantitative removal of strontium and cesium from the fission product wastes very radically changes the long-term waste disposal outlook, it is manifestly important that proposals for their economic removal from all types of waste be given the utmost consideration.

2.0 PROPOSED WASTE TREATMENT

The proposed scheme is shown in Fig. 1.

Scavenging Precipitation

The acidic aluminum nitrate waste is first adjusted to pH 2 by neutralization or boiling to remove excess nitric acid, and is then scavenged by a ferric hydroxide—manganese dioxide precipitation.[1] In this step 97% of the ruthenium, ~99% of the zirconium, and ~90% of the niobium are removed in a highly concentrated form. The aluminum waste is then ready for conversion to diban (dibasic aluminum nitrate) and further decontamination.

Diban Formation

The aluminum nitrate is converted to diban in order to convert most of the strongly sorbed tripositive aluminum ion to the much less tightly sorbed $Al(OH)_2^+$ ion. This conversion makes it possible for strontium, cesium, and the rare earths to compete successfully for active exchange sites in the presence of large excesses of aluminum. One method of conversion of the acidic solutions of aluminum nitrate

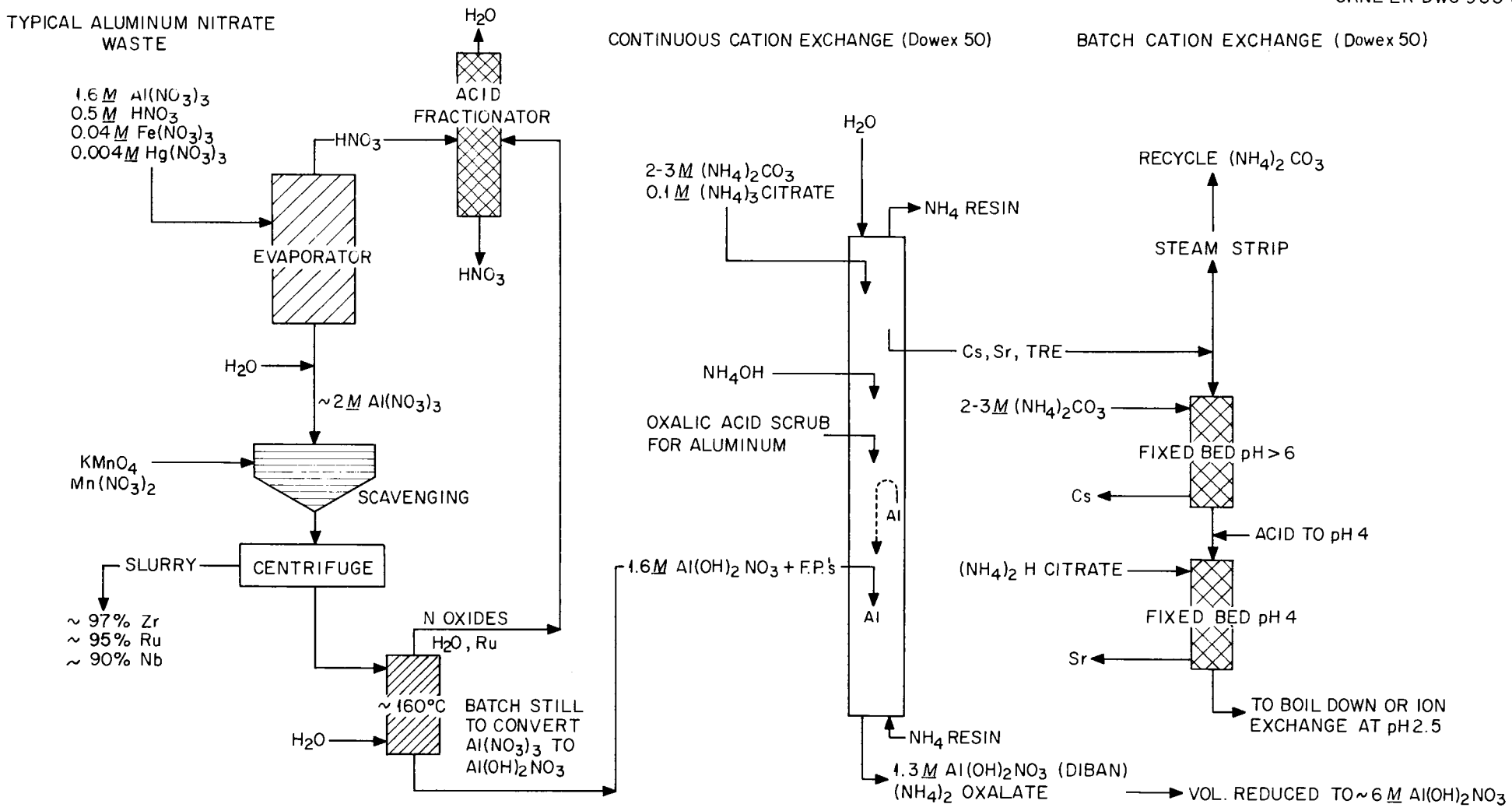

Fig. 1. Proposed Scheme for Removing Fission Products from Radioactive Wastes Containing $Al(NO_3)_3$.

to dibasic aluminum nitrate is by metathetical exchange using strong-base-type anion exchange resins (ROH):

$$Al(NO_3)_3 + 2ROH \rightleftharpoons Al(OH)_2NO_3 + 2RNO_3. \qquad (1)$$

Another method is by destructive distillation:

$$Al(NO_3)_3 + 2H_2O \underset{\sim 160^\circ C}{\overset{\Delta}{\rightleftharpoons}} Al(OH)_2NO_3 + 2HNO_3. \qquad (2)$$

Both methods of preparation have disadvantages. The resin method is costly because of equipment, resin, and regeneration costs. The distillation method leads to very corrosive conditions in the distillation pot. In Table 1 are summarized some preliminary corrosion studies made with pieces of 304L stainless steel in boiling solutions.

Table 1. Corrosion of 304L Stainless Steel in Destructive Distillation of Aluminum Nitrate Solution

Concentration (M)		B.P.	Total Time of	Avg. Corrosion Rate of Unwelded Coupons
Al^{3+}	HNO_3	(°C)	Test (hr)	(mils/yr)
1.67	1.5	107	51	4.15
3.9	3.4	130	71	13
Semisolid, ~100% diban		140-150	136	442

It is apparent that the distillation pot should not be made of type 304L stainless steel. This is, however, the only equipment in the proposed scheme for which stainless steel would not be suitable. It is possible that either titanium or the newly reported[2] alloy Nionel, which is highly resistant to nitrate ion corrosion, may be used for the distillation pot. However, there is no corrosion information available at present for either of these metals under the expected conditions.

A possible third method of degrading the aluminum nitrate is by electrodialysis.[3]

Laboratory studies up to this time have been made with the destructive distillation method. The acid that is distilled off is recovered, and appropriate measurements made to determine when diban has been formed. Temperatures up to 160°C are required for the conversion. In laboratory experiments the extent of conversion to diban is determined by collecting the distillate in an amount of caustic solution calculated to just neutralize the nitric acid plus two-thirds of the nitrate ion from the aluminum nitrate originally present in the waste. At this point the pot temperature is about 160°C, and the diban in the pot is a friable solid. On a larger scale, specific gravity measurements, perhaps in conjunction with sampling of the distillate, may be applicable.

After the solid diban has been formed, water is added to make a solution about 3 M in diban, and the mixture is digested for 12 hr, during which time all but a very small amount of the solid diban dissolves. A rough measurement has shown that a freshly prepared 5.8 M solution of diban boils at ~101.5°C. Solids usually precipitate from such concentrated solutions after they have aged at room temperature for several weeks.

Ion Exchange

Continuous cation exchange will remove strontium, cesium, and the rare earths from the diban wastes to any predetermined degree of separation. In a system of 1.6 M diban solution in contact with Dowex 50, 50-100 mesh, 8% cross-linked, the distribution coefficient (calculated as radioactivity per unit volume of resin divided by radioactivity per unit volume of solution) for strontium is 8; for cesium, 7; and for rare earths, 11. These are adequate for ion exchange treatment of the waste.

The above fission product distribution data show the chemical feasibility of the ion exchange separation of the fission products strontium, cesium, and the rare earths from the diban wastes. The operation is made mechanically feasible through the use of the Higgins

contactor.[4] In principle, the contactor permits continuous countercurrent extraction of the fission products in a manner which is in all respects analogous to countercurrent solvent extraction or to distillation. Since in the Higgins contactor the only moving parts are the valves and the resin bed itself, its operation is smooth and trouble-free. It is the simplicity of operation which makes the contactor admirably suited to this application.

The separated fission products may easily be concentrated to a small volume for storage, or they can be further separated into pure components if it becomes economically desirable to do so. It is reasonable to suppose, for example, that a large market for radiocesium will develop in both medical and industrial fields, making it advantageous to have the cesium in a pure form. When such a time comes it will be easy to recover almost any required amount of cesium from the radioactive waste concentrate from the resin contactor.

It is an inescapable fact that a resin regenerant must be employed in the fission product removal cycle, but an easily destroyed or easily recycled regenerant may be used to avoid adding the regenerant cation to the wastes which must be stored. The cost of the resin regeneration and of the storage of the additional waste, if necessary, may be looked upon as the price paid for the recovered, potentially valuable, fission product activities. Since the biologically hazardous Sr^{90} and the long-lived Cs^{137} can be reduced to an innocuous level, the waste could conceivably be discharged to adsorptive soils instead of metal tanks, thereby further defraying the additional cost of the resin regeneration step. Soil uptake of the remaining fission products, mainly zirconium and niobium, is feasible with the diban system but not with direct disposal of the untreated aluminum nitrate wastes or with the scheme employing caustic neutralization, because the last two named schemes involve wastes having large excesses of aluminum ion in one case and sodium ion in the other. These large excesses of bulk ion saturate the soils and leave little adsorptive capacity for the radioactive fission products.[5-7] If such ground storage is adopted, the regeneration cost would be more than overbalanced by the storage

facility savings.

Resin Radiation Damage

If a scheme such as that outlined in this report is to be practicable, the ion exchange resin must not suffer severe radiation degradation in a single pass through the contactor. It is fortunate that such is the case when a strong-acid type cation exchanger such as Dowex 50 is used. The following calculations for a typical waste show that the order of magnitude of degradation to be expected in a single pass of the resin through the contactor is about 0.0056%, which is negligible.

> Conditions: Uranium-aluminum alloy fuel, 10% uranium initially; 5.3 months' irradiation at 4×10^{13} n/cm^2/sec; 5 months' decay; β watts/initial g of U^{235} = 0.25; 20% degradation when 1 g of resin absorbs 1 watt-hr.
>
> If the diban feed is 2 M, the rate of energy absorption is $0.25 \times 2 \times 27 \times 0.1 = 1.35$ β watts/liter of solution. The ratio of resin weight to volume of solution in the contactor is about 8 to 10, so that every liter of solution contacts 800 g of resin. If the contact time of the fission products with resin in the column is 10 min, then the percent of degradation per pass is given by
>
> $$\frac{1.35}{800} \times 20 \times \frac{10}{60} = 0.0056\%.$$

Properties of Diban Solutions

Several experiments (Table 2) were made to determine the chemical nature of diban solutions and of the resin-diban reaction.

The pH measurements showed that for the reaction

$$Al(OH)_n^{3-n} \rightleftharpoons Al(OH)_{n-1}^{3-n-1} + OH^- \qquad (3)$$

the overall dissociation constant, k_1 must be of the order of 10^{-20}:

$$k_1 = \frac{[Al(OH)_{n-1}^{3-n-1}][OH^-]}{[Al(OH)_n^{3-n}]} = 1 \times 10^{-20}. \qquad (4)$$

This value of k_1 is a very preliminary average value for the several possible equilibria, and indicates only that the diban ion is a strongly associated complex ion.

Table 2. Resin-Diban Equilibrium Studies

Resin: Nalcite HCR in H^+ form
Solution: 1.38 M diban, 2.9 M acid deficient, pH = 3.51

Experiment No.	Resin (g)	Diban Solution (ml)	Acid Deficiency (M)	Al in Final Liquid (M)	pH of Final Liquid
1	1.0	20	2.6	1.29	3.37
2	0.50	10 (+10 H_2O)	1.3	0.67	3.59
3	0.33	6.7 (+13.3 H_2O)	0.90	0.43	3.63
4	5	20	2.50(?)	1.05	3.15
5	10	20	1.65	0.98	3.03

Experiments 1 and 5 show that the ion which does sorb on the resin is less hydrolyzed than the "average" ion in the original diban solution, and, as a matter of fact, that it is probably exclusively the Al^{3+} ion, since the decrease in acid deficiency in the solution is about three times the decrease in aluminum concentration.

Solubility data on the $Al(NO_3)_3$-HNO_3 system[8] are presented for convenient reference in Fig. 2. The approximate density, in g/ml, of a solution of aluminum nitrate and nitric acid at 25°C is given by

$$g/ml = 1.001 + 0.155\,[Al(NO_3)_3] + 0.032\,[HNO_3]\,. \qquad (5)$$

For example, the density of a solution 4.16 M in HNO_3 and 1.20 M in $Al(NO_3)_3$ is 1.001 + 0.155 x 1.20 + 0.032 x 4.16 = 1.32 g/ml.

The approximate density at 25°C of a solution of diban may be calculated from

$$g/ml = 1 + 0.069\ M\ \text{diban}, \qquad (6)$$

UNCLASSIFIED
ORNL-LR-DWG 9526

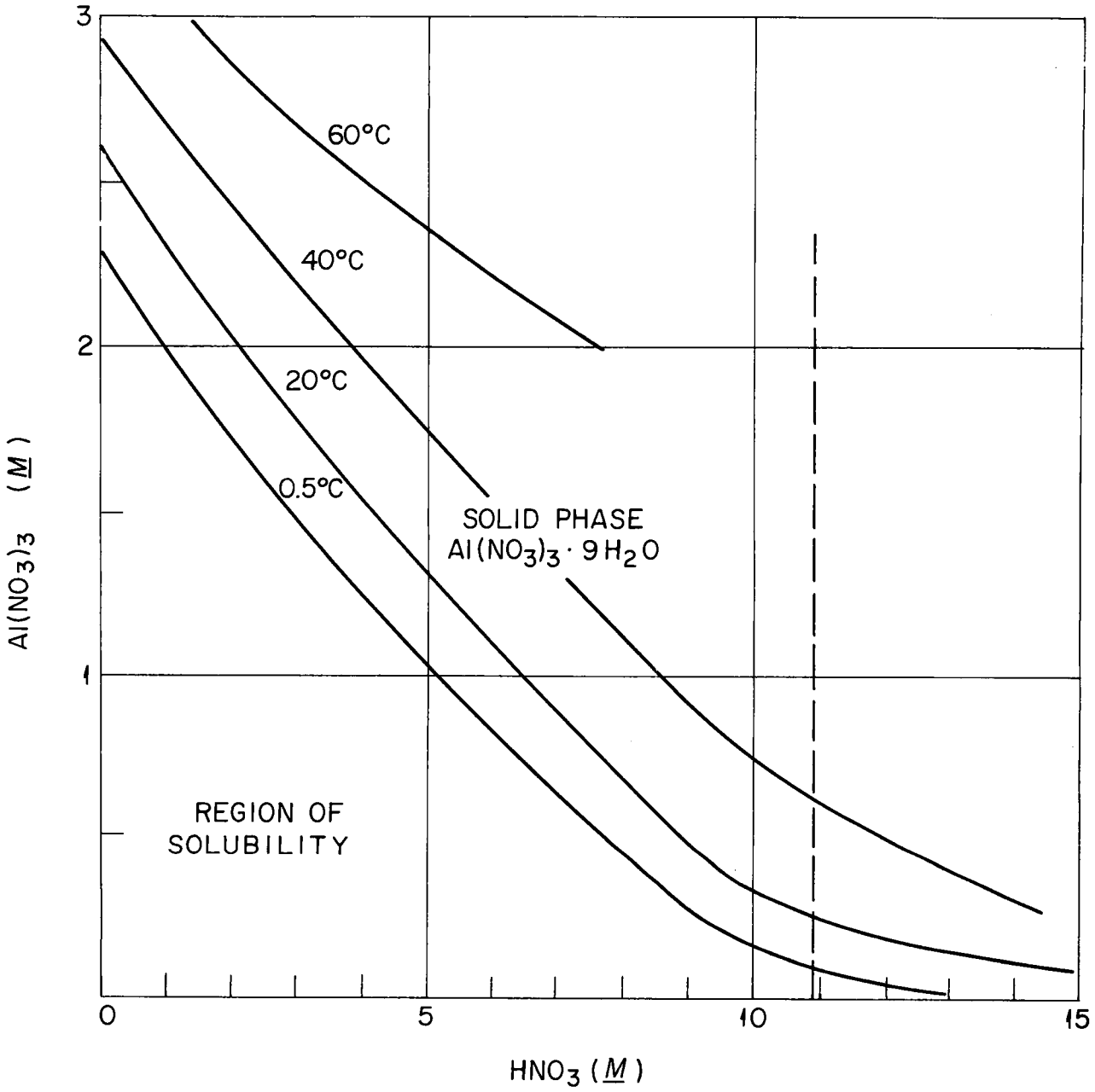

Fig. 2. Compositions of Saturated $Al(NO_3)_3$-HNO_3-H_2O Solutions at Various Temperatures.[8]

which contains the experimental observation that the apparent density of diban in solution averages 2.3 g/ml over the range 1-5 M diban.

It is possible to prepare a clear, metastable 6 M diban solution at room temperature; however, over long periods of time the solution becomes milky, and solids precipitate. For near-permanent stability the present belief is that a 3 M solution is more desirable. If temporary storage is desired, simple conversion of the wastes to 6 M diban offers a volume reduction of 300-400% over the present practice of storing at 1.5-2.0 M Al.

3.0 FUTURE WORK REQUIRED

The chemical flowsheet, especially as it relates to operation of the Higgins contactor, must be demonstrated. The scrubbing operation is not yet well established. Therefore, it is of prime importance to define the conditions of the scrubbing operation and to seek alternate practicable scrubbing procedures. Since the relatively small amount of sorbed aluminum is the tightly bound tripositive Al^{3+} ion, it seems that a complexing agent for aluminum will be required. It is necessary that the complexing agent employed does not interfere with the upward course of the fission products in the contactor. This requirement imposes a rather severe limitation on the compositions of scrub solutions which may be used.

It is desirable, of course, that the proposed scheme have as wide applicability as possible. For this reason, all wastes having aluminum nitrate as their principal nonvolatile constituent should be investigated to determine their amenability to decontamination by this scheme.

A considerable amount of waste contains a large amount of ammonium nitrate in addition to the aluminum nitrate normally present. Since both ammonium nitrate and small amounts of organic material from the organic extractant can potentially appear in this type of waste,

destructive distillation to diban is probably not an acceptable procedure because of the explosion hazard. Consequently, the metathetical exchange of nitrate for hydroxyl ion on anion exchange resins should be investigated for application to this waste. In light of the stability of the $Al(OH)_2^+$ ion, as shown by Eq. 4, the resin method appears to be favorable because essentially all the diban will probably form before a significant amount of the ammonium nitrate is converted to ammonium hydroxide. The calculations below show the orders of magnitude involved:

Equilibria: $Al(OH)^{2+} + OH^- \rightleftharpoons Al(OH)_2^+$, $k_1 \approx 1 \times 10^{20}$;

$NH_4^+ + OH^- \rightleftharpoons NH_4OH$, $k_1 \approx 5 \times 10^4$.

Conditions: pH = 3.5; $[H^+] = 3 \times 10^{-4}$; $[OH^-] = 3 \times 10^{-9}$.

Calculations: $$\frac{[Al(OH)_2^+]}{[Al(OH)^{2+}]} = (3 \times 10^{-9})(1 \times 10^{20}) = 3 \times 10^{11};$$

$$\frac{[NH_4OH]}{[NH_4^+]} = (3 \times 10^{-9})(5 \times 10^4) = 1.5 \times 10^{-4}.$$

From these rough calculations it is seen that at pH 3.5 the ratio of concentration of NH_4OH to that of NH_4NO_3 is about 10^{-4}, whereas the ratio of concentration of diban to that of its dissociation products is 3×10^{11}. This indicates a favorable situation for preferential diban formation. Because of the high ammonium ion concentration, it is to be expected that cesium will not be sorbed by the cation exchange resin in the Higgins contactor as well as when the ammonium nitrate is absent. For this reason it may be necessary to use a resin which shows some selectivity for cesium, such as the phenolic resin Duolite C-10, in order to obtain the desired cesium decontamination. This resin and others should be evaluated for use with the ammonium nitrate waste.

The scheme presented in this report is not necessarily limited to wastes containing diban. The essential features of the scheme are removal or destruction of the large excesses of radioactively inert materials to facilitate sorption of the important radioactive materials,

and continuous removal of these radioactive fission products by means of the Higgins contactor. If the inert material is mainly nitric acid, as in certain solvent extraction wastes, partial acid recovery followed by near-neutralization with caustic to give a weakly acidic solution of sodium nitrate from which the fission products may be easily removed is practicable. This modification to the scheme should be investigated.

It has been demonstrated that at least 99.9% of the cesium can be removed from solutions containing 1.5 M $NaAlO_2$-1.5 M NaOH. Such waste solutions are at present not important, but may be if caustic dissolution of uranium-aluminum alloy is adopted. Only cesium removal need be considered in such wastes since the bulk of the fission products would be concentrated in the small volume of nitric acid required for the uranium solvent extraction in such a dissolution-uranium purification system.[9] If caustic dissolution is adopted, the ion exchange decontamination of the caustic-aluminate waste should be further investigated.

Much of the existing waste is neutralized aluminum nitrate waste. The principal constituent is sodium nitrate, with sodium hydroxide and sodium aluminate being present in appreciable amounts in some cases. It is expected that these wastes will be very similar to the caustic-aluminate waste mentioned above, and so could probably be decontaminated by ion exchange in the Higgins contactor if required. It is apparent, however, that it is not economically desirable to neutralize the aluminum nitrate wastes, since 3 moles of caustic are required just to neutralize 1 mole of aluminum nitrate, another mole of caustic is required to form sodium aluminate, and still another is required to stabilize the solution. Therefore, if the proposed scheme is assumed, aluminum nitrate wastes would no longer be neutralized but would be decontaminated following conversion of the aluminum nitrate to dibasic aluminum nitrate.

4.0 REFERENCES

1. R. E. Blanco, I. R. Higgins, A. H. Kibbey, ORNL-301 (May 29, 1953).
2. W. Z. Friend, series of three articles in Chem. Eng. Prog., 51, No. 5, p. 66; No. 6, p. 296; No. 7, p. 36 (1955).
3. E. J. Parsi, ORNL-1812 (Jan. 17, 1955).
4. I. R. Higgins, "Mechanical Features of the Higgins Solid-Liquid Contactor," ORNL-1907 (Sept. 29, 1955); I. R. Higgins, J. T. Roberts, "A Countercurrent Solid-Liquid Contactor for Continuous Ion Exchange," Chem. Eng. Symposium Series, 50 (14), 87 (1954).
5. M. I. Goldman, Waste Disposal Research Group, Health Physics Division, ORNL, personal communication.
6. K. Z. Morgan, "Health Physics Division Semiannual Progress Report for Period Ending Jan. 31, 1955," ORNL-1860, p. 19.
7. H. L. Krieger, B. Kahn, C. P. Straub, "Removal of Fission Products from Acid Aluminum Nitrate Solutions by Coprecipitation Methods," ORNL-1966 (Sept. 28, 1955).
8. A. Seidell, "Solubilities of Inorganic and Metal Organic Compounds," p. 92, D. Van Nostrand Company, Inc., New York, 1940.
9. R. G. Wymer, D. M. Helton, A. H. Kibbey, J. F. Land, ORNL-1782 (Jan. 14, 1955).
10. KLX-1723 (June 15, 1954).
11. KLX-1729 (Sept. 30, 1954).
12. KLX-1734 (Nov. 30, 1954).
13. B. Manowitz, L. P. Hatch, "Processes for High Level Waste Disposal," Chem. Eng. Prog., 50, No. 12, p. 144 (1954).
14. M. McEwen, MLM-672 (March 5, 1953).
15. MLM-662 (March 1, 1952).
16. T. Aponyi et al., MLM-835 (April 17, 1953).
17. M. M. Haring, MLM-614 (Oct. 8, 1951).
18. E. P. Wigner et al., ORNL-1638 (Feb. 5, 1954).
19. L. P. Hatch, J. J. Martin, W. S. Ginell, "Ultimate Disposal of Radioactive Wastes," Nucleonics 12, No. 6, 14 (1954).

20. L. P. Hatch, "Ultimate Disposal of Radioactive Wastes," Am. Scientist, 41, 410 (1953).

21. J. A. Ayres, KAPL-427 (Dec. 4, 1950).

22. J. A. Ayres, F. N. Schell, KAPL-474 (Feb. 24, 1951).

23. A. L. Medin, SRO-1 (May 1, 1952).

24. KLX-1394 (Aug. 17, 1953).

5.0 APPENDIX

Review of Proposed Waste Disposal Schemes

Quite a large number of schemes have been proposed for ultimate or long-term waste disposal. Those schemes which have had a reasonable amount of work done on them and which seem to be promising have been evaluated, and the results of the evaluations appear in references 10-12.

The schemes fall into three general categories, according to their closeness of approach to ultimate solution of waste disposal problems. The three categories, arranged according to the increasing permanency of the types of storage, are: (1) modification of existing storage facilities, (2) waste reduction with potential recovery of fission products for reuse, and (3) processing of wastes for permanent disposal.

Modification to Existing Storage Facilities

Hanford (quoted in reference 12) has proposed that the quantity of waste stored be reduced without extensive equipment modification by self-concentration of the neutralized wastes to dry solids or to "solutions" containing 60% solids. This scheme does not afford an ultimate solution to the waste problem because the radioactive material, accompanied by a large amount of inert salt, must be stored in tanks and can potentially be released by a leak in the storage tank.

Waste Reduction with Potential Recovery of Fission Products for Reuse

Brookhaven National Laboratory has suggested[13] fusing the wastes into a homogeneous melt for underground tank storage. The fused wastes could be heated and pumped out of the tanks for fission product recovery if desired. Such a scheme affords a very high volume reduction, possibly up to 60-fold in the case of wastes containing very little

aluminum nitrate, and is attractive, but poses very difficult chemical and engineering problems. When the wastes are high in aluminum nitrate content, twofold volume reduction may be more realistic.

Mound Laboratory has suggested decontaminating the high-activity waste by coprecipitating the fission products with ferrous sulfide, ferrous hydroxide, and calcium phosphate.[14-17] Storage of the scavenged wastes as slurries would lead to a volume reduction factor of as much as 30 to 1. The basic approach of this scheme is the same as that presented in this report, namely, removal of the radioactive materials from the bulk salts to permit small-volume storage. The operations, however, are somewhat more involved than those of the ion exchange scheme.

It was suggested at Knolls Atomic Power Laboratory (quoted in reference 12) that the amount of aluminum nitrate stored as waste could be greatly reduced by precipitation of crystalline $Al(NO_3)_3 \cdot 9H_2O$ from concentrated nitric acid. Work on this suggestion was carried through the small pilot plant stage at Knolls Atomic Power Laboratory.[21-24] Concentration factors of 300-500 have been reported, and decontamination factors of > 10 for beta activity and 10^3 for gamma activity have been obtained. However, with the multiple nitric acid washes required to get the high decontaminations, a volume concentration factor of 75 to 1 is more realistic. This is, however, a very considerable volume reduction, and the suggestion has considerable merit. It is possible that a happy marriage of the scheme outlined in this report and of bulk aluminum nitrate removal by the suggested crystallization might be achieved. The diban waste from the resin column could be neutralized with the acid removed in the evaporator and diban still, and further acid added to precipitate the already highly purified aluminum in an even purer form.

Processing of Waste for Permanent Disposal

The two principal schemes in this category are waste storage in impermeable lined pits,[18] and fixation of wastes on unleachable

fired clays.[19,20] There are considerable difficulties entailed in selecting a suitable nonpermeable membrane for lining the proposed pits. Chemical attack, accelerated by fission product heat, is probably the most serious problem. Until a cheap membrane of suitable nature is found, high activity waste storage in lined pits seems unlikely. Fixation on clay is feasible only after inert bulk ions have been removed, and such removal may prove expensive, since some sort of electrodialysis may be required. It is, however, a long-term answer to the waste problem.

It seems likely that the ion exchange removal of the principal radioactive contaminants from diban wastes, as proposed in this report, might well be integrated with both the above permanent disposal schemes. The decontaminated diban wastes could be stored in pits, while the unwanted concentrated wastes from the contactor could be fired in clay, and, perhaps, put into the same pits.