ANL-5509

Cy-3-

Argonne National Laboratory

THE SAFE HANDLING OF RADIOACTIVE-PYROPHORIC MATERIALS

by

L. R. Kelman, W. D. Wilkinson, A. B. Shuck
and R. C. Goertz

ORNL DOCUMENT REFERENCE
LIBRARY, Y-12 BRANCH
LOAN COPY ONLY

Do NOT transfer this document to any other person. If you want others to see it, attach their names, return the document, and the Library will arrange the loan as requested.

ANL-5509
Engineering

ARGONNE NATIONAL LABORATORY
P. O. Box 299
Lemont, Illinois

THE SAFE HANDLING OF RADIOACTIVE-PYROPHORIC MATERIALS

by

L. R. Kelman, W. D. Wilkinson, A. B. Shuck, and R. C. Goertz

December, 1955

Operated by The University of Chicago
under
Contract W-31-109-eng-38

TABLE OF CONTENTS

		Page
ABSTRACT		5
I.	INTRODUCTION	5
II.	HEALTH HAZARDS	7
III.	METHODS OF PROTECTING PERSONNEL	9
IV.	EXISTING GLOVEBOX SYSTEMS	10
	A. General	10
	B. ANL Plutonium Metallurgy Research Laboratory	11
	C. ANL Fuel Fabrication Facility	14
V.	PRINCIPLES OF SAFE GLOVEBOX OPERATION	16
VI.	MINIMIZING THE HAZARDS OF FINE PARTICLES	17
VII.	DESIGN AND CONSTRUCTION OF GLOVEBOXES	18
	A. Size, Shape, and Strength	18
	B. Materials	20
	C. Visibility	21
	D. Tightness	22
	E. Details of Construction	25
	1. ANL Plutonium Metallurgy Research Laboratory	25
	2. ANL Fuel Fabrication Facility	26
VIII.	VENTILATION AND ATMOSPHERE CONTROL	33
	A. Air and Inert Gas Systems	33
	B. Considerations for Selection of the Inert Gas	34
	C. Purification Methods	36
	D. Atmosphere Control in the ANL Plutonium Metallurgy Research Laboratory	37
	1. Helium Circulation	37
	2. Pressure Control	38
	3. Emergency Ventilation	38
	4. Purification System	39
	5. Air Ventilation	40
	E. Atmosphere Control in Fuel Fabrication Facility	40
	1. Filtered Air Ventilation of the Primary Gloveboxes	41
	2. Emergency Ventilation	41
	3. Helium Atmosphere System	42
	4. Subhood Ventilation	42

TABLE OF CONTENTS

	Page
F. Auxiliary Equipment	42
1. Pumps and Compressors	42
2. Valves	43
3. Filters	44
4. Purity Indicators	48
IX. TRANSFER TECHNIQUES	49
X. GLOVES FOR GLOVEBOXES	52
A. The Glove Problem	52
B. Standardization	52
C. Design Considerations	53
D. Working with Gloves	55
XI. THE HANDLING OF GAMMA RADIOACTIVE MATERIALS	60
A. Low Alpha Emitters	60
B. High Alpha Emitters	68
ACKNOWLEDGMENTS	70
REFERENCES	71

LIST OF FIGURES

Figure		Page
1	Plutonium Metallurgy Research Laboratory Showing Glovebox Arrangement	12
2	View of the Plutonium Metallurgy Research Laboratory	13
3	Fuel Fabrication Facility Showing Glovebox Arrangement	15
4	Interconnecting Glovebox and Vacuum Lock Arrangement in the Research Laboratory	19
5	Prototype Fuel Fabrication Facility Gloveboxes	19
6	Window Seal for Research Laboratory Glovebox	23
7	Openings Permitting Safe Entry and Extension of Contaminated Gloveboxes	24
8	Interglovebox Wall and Door Seals for Research Laboratory	27
9	Glove Port Cover for Research Laboratory	28
10	Sections Through the Aluminum Extrusions and the Casting Which Make Up the Frame for the ANL Fuel Fabrication Facility Glovebox	29
11	Details of Seals of the Extruded Aluminum Frame Glovebox	30
12	Section Through Hollow Longitudinal Corner Member Showing Window and Panel Seal	31
13	Window Seal for Extruded Frame Glovebox	32
14	Schematic Helium Circulating Pressure Control System of the Research Laboratory	38
15	Three-way Direct Current Solenoid Valve for the Research Laboratory Helium Control System	45
16	Filter Assembly for the Research Laboratory Helium Circulating System	47

LIST OF FIGURES

Figure		Page
17	Research Laboratory Transfer Procedure	51
18	Research Laboratory Pouch Extension Procedure	51
19	Research Laboratory Glove Replacement Procedure	57
20	Junior Cave with Lead Glass Window and Master-Slave Manipulator	61
21	Mechanical Master-Slave Manipulator Model 7	62
22	Rubber-Booted Slave Arm with Replaceable Tongs	63
23	Metallurgy Cave with Zinc Bromide Windows and Master-Slave Manipulators	64
24	Cutaway View of Metallurgy Cave	64
25	Master-Slave Manipulator Model 8	65
26	Milling Machine Hooded Inside Cave for Alpha-Gamma Work	66
27	Master-Slave Servo-Manipulator Model 2	67
28	High Level Alpha-Gamma Cave	69
29	Plan View of High Level Alpha-Gamma Cave	69

THE SAFE HANDLING OF RADIOACTIVE-PYROPHORIC MATERIALS

by

L. R. Kelman, W. D. Wilkinson, A. B. Shuck, and R. C. Goertz*

ABSTRACT

Most metallurgical operations can be applied to the intensely radioactive metals provided the metallurgist is cognizant of the properties of these metals and the health hazards associated with them. This paper is concerned with means of safely handling large amounts of high intensity alpha emitters which may also be pyrophoric and/or gamma active. The health hazards involved and the methods of protecting personnel against them are reviewed. Philosophies and principles of safe glovebox operation are discussed and the design and construction of two ANL facilities capable of handling high levels of alpha activity are described. A Plutonium Metallurgy Research Laboratory using a helium atmosphere in leak-tight gloveboxes has been in operation for over one and one-half years without incident. A large, versatile Fuel Fabrication Facility using a newly developed extruded aluminum frame glovebox of flexible modular design is now under construction. Also described are existing facilities for handling large quantities of intense gamma emitters, and methods are proposed for handling such materials when they are highly alpha active.

I. INTRODUCTION

The methods of powder metallurgy are applicable to radioactive metals, including the fissionable elements, and many exponents of the methods foresee a bright future in working with these materials.(1) Applications of powder metallurgy to the intensely radioactive metals and ceramics will not, however, be practicable without expensive specialized modification of existing equipment and techniques to minimize the hazards of the operations.

---

*Of the authors, L. R. Kelman and W. D. Wilkinson were concerned with the ANL Plutonium Metallurgy Research Laboratory, A. B. Shuck with the ANL Fuel Fabrication Facility, and R. C. Goertz with the handling of gamma emitters.

The hazards will vary with the intensity and kind of radiation, with the toxicity of the material, with the chemical reactivity and pyrophoricity of the material, to a degree with the quantity of material handled, and with the inherent cleanliness of the operation.

The radioactive materials may emit penetrating gamma rays or neutrons which necessitate manipulation from behind shields sufficiently thick to absorb the radiation; or the radiation may consist of alpha or beta particles. The alpha-emitting materials can be handled with gloves provided adequate provision is made to keep personnel exposure below the maximum permissible limits (MPL) as established by the National Committee on Radiation Protection.

General information on working at relatively low levels of alpha activity can be found in publications based on the several symposia that have been held in this country and in England during the past few years. Typical of these are the U.S.A. symposium on Laboratory Design for Handling Radioactive Materials[2] and the British Symposium on the Handling of Radioactive and Toxic Substances.[3] Acquaintance with the problems and techniques presented at these symposia will provide excellent background for the subject of this paper, which is concerned with the special handling problems which face the powder metallurgist who must work with large amounts of high-intensity alpha emitters. The handling problems are especially complicated by the pyrophoric tendencies of some of the metals and their alloys. Also of concern to this paper are the problems of handling irradiated reactor fuels that are intensely alpha, beta, and gamma active.

In this paper the authors will indicate current lines of reasoning, decisions that they made in designing and constructing facilities for handling large amounts of high-intensity alpha emitters at Argonne National Laboratory, and experience in operating one of these facilities. As is usual with new installations, the ANL facilities have benefited from the experience and advice of workers at other installations and much credit is due them for their pioneering. Special reference will be made to the problems of handling plutonium, since that is the alpha emitter which is our main concern in the Metallurgy Division at ANL. Plutonium and its alloys are of interest because of their potential use as fuels for power-breeder reactors.[4] As can be seen from the following discussion of relative health hazards, and in view of the pyrophoric nature of plutonium and some of its alloys, any of the pure alpha emitters can be handled safely by methods that are suitable for plutonium.

II. HEALTH HAZARDS

Health hazards of radioactive materials and methods of detection and of disposal have been discussed extensively in the literature and have been the object of several government publications.[4, 5, 6, 7, 8, 8a] Safeguards against external irradiation are relatively well understood so that safe handling practices of major concern are governed mainly by the toxicity considerations. Severe radiation hazard is associated with those isotopes that have unfavorable combinations of long half-life, high body uptake, high tissue concentration, and low elimination rate. Alpha emitters are of special concern since the alpha particles have a comparatively large mass and very little penetrating power - from the natural radioactivity of plutonium the alpha particle range is only 3.68 cm in air and about 45 microns in body tissue.[4] The extreme biological damage can be attributed to this small penetrating power, since the entire energy is dissipated in the tissues immediately surrounding the point of deposition of the alpha emitter. There is considerable work in progress toward a better understanding of permissible radiation exposure levels - particularly for ingested radioactive materials. Since possible genetic changes effective in later generations have not been established, especially for long term exposure to low level activity, available information must be regarded with caution and safety factors used wherever possible.[8a] An obviously safe practice, and one worth striving for, is to permit no radioactive material, especially if it is one of the bone-seeking alpha emitters, to enter the body.

The alpha-emitting elements of present metallurgical interest include thorium, uranium (U^{233}, U^{235}, U^{238} and normal uranium), radium, polonium, and plutonium. The radioactivities of these elements differ both in intensity and in energy. Thorium and normal uranium may be handled with about the same degree of caution as is used in handling any chemically toxic or pyrophoric material. Polonium, U^{233}, and plutonium, on the other hand, are on an entirely different scale of toxicity than are most poisonous industrial materials. For example, the maximum permissible limit (MPL) of hydrogen cyanide gas in air is about 350 million times as great as the MPL for plutonium.[8b]

Table I shows the energy intensity and maximum permissible limits of contamination as established by the National Committee on Radiation Protection (NCRP) for some of the insoluble alpha-emitting isotopes. The maximum permissible limits (MPL) are given in terms of grams per cubic meter of air (g/m^3) as well as in disintegrations per minute per cubic meter (DPM/m^3). It is difficult to appreciate the significance of the extremely low maximum permissible limits (MPL) of some of the materials in Table I unless one has experienced high air counts. Those who have worked with natural uranium are aware of the precautions necessary to keep the air count within tolerance limits. To them it will be obvious that complete

physical separation by an impermeable barrier is necessary in handling materials such as plutonium whose maximum permitted weight in air is less than one-millionth that of natural uranium.

Table I

ENERGY, SPECIFIC ACTIVITY, AND MAXIMUM PERMISSIBLE LIMITS OF RADIOACTIVE ISOTOPES IN AIR

Isotope	Energy of α Particle (Mev)	Specific Activity (grams/curie)	Maximum Permissible Limits in Air		
			*NCRP (μ-curies/ml)	Calculated	
				(g/m^3)	(DPM/m^3)
U-Natural	-	-	1.7×10^{-11}	5.1×10^{-5}	38
U^{238}	4.18	3.0×10^{6}	1.7×10^{-11}	5.1×10^{-5}	38
U^{235}	4.56	4.7×10^{5}	1.6×10^{-11}	7.4×10^{-6}	36
U^{233}	4.82	1.1×10^{2}	1.6×10^{-11}	1.7×10^{-9}	36
Pu^{239}	5.14	16.1	2.0×10^{-12}	3.2×10^{-11}	4.4
Po^{210}	5.3	2.2×10^{-4}	7.0×10^{-11}	1.6×10^{-14}	156
Ra^{226}	4.8	1.0	8.0×10^{-12}	8.0×10^{-12}	17.8

*National Committee on Radiation Protection.

One hazardous feature of plutonium is that it tends to become air-borne as extremely fine particles of oxide or of some other brittle compound. The finer the particles, the more easily they can reach the alveoli of the lungs and become absorbed. It has been suggested that emitted alpha particles can dislodge fragments of plutonium and especially of plutonium oxide from the surface of the metal oxide. However, metallic plutonium will contaminate any object that it touches, and one must work with it or similar alpha emitters to appreciate how rapidly it can be spread by physical contact of contaminated surfaces without the benefit of air-borne particles.

In handling mixtures, alloys, or large quantities of fissionable materials, the hazards of nuclear reactions are always present. No work should be attempted without appropriate safeguards against accidental alpha-neutron reactions or fission by critical mass.

The handling of plutonium in gloveboxes is complicated by the fact that plutonium is not purely an alpha emitter, and the presence of gamma activity limits the time of contact with the gloved hand. Actually the low-energy X-rays resulting from the natural decay of plutonium are not the major concern, since they can be stopped by heavy neoprene gloves. However, there is invariably considerable high-energy X-rays from associated radioactive impurities in the plutonium that is available for use. The amount of these high-energy X-ray emitters is dependent upon the history of the plutonium; such factors as pile exposure and especially efficiency of the separations process are of prime importance. A study of surface dosage rates of massive plutonium as a function of absorber thickness indicates that the plutonium studied should not be handled in the gloved hand (30 to 35 mils neoprene and 9 to 11 mils latex) for more than about 1-1/2 hours per week.(8) Because of the importance of history, the actual glove handling time limits should be based upon measurement of the penetrating radiation of the lot of plutonium in question.

III. METHODS OF PROTECTING PERSONNEL

The radioactive materials which are dangerous because of penetrating gamma or neutron radiation are handled by remote control in so-called "caves" or highly shielded enclosures. Materials that emit alpha radiation accompanied by little or no beta or gamma radiation are normally handled by means of arm-length gloves attached to glove port flanges on windowed enclosures called "gloveboxes."* The safe handling of alpha-emitting materials depends not only upon the design of gloveboxes or the "caves" but also upon the procedures and precautions employed.

Another possible approach to personnel protection which has been considered where large equipment is involved is to house the operator in a pressurized suit or mobile enclosure with the equipment in a permanently contaminated, inert gas-filled room. This would permit the use of standard equipment regardless of size in more or less standard arrangements. This approach has not been attempted because of lack of experience and a feeling that the operator would not be protected sufficiently. As "space suit" techniques are further developed, this method may well be the answer to the high cost of equipment modification and enclosure associated with the glovebox approach.

Automatic operation of all equipment has been attempted in routine production facilities with some degree of success. This has proven to be a costly approach to handling alpha emitters and has presented some difficult

---

*The term "glovebox" is suggested for this type of enclosure to avoid the ambiguous expression "glove box" and the clumsier expression "gloved box."

maintenance problems. A variation of this approach, which has received considerable attention where, in addition to the alpha problem, the gamma activity is such as to require thick shielding walls or great distances, is to design all equipment for essentially automatic operation and service it with electronically operated remotely controlled manipulators. This approach is still in its development stage and gives promise of being a real solution to the safe handling problem.

Where versatility and flexibility are essential, such as in a research laboratory, there appears to be no reasonable substitute for the dexterity of the human hand; the glovebox approach is the one most favored.

IV. EXISTING GLOVEBOX SYSTEMS

A. General

Existing glovebox systems for handling plutonium differ considerably in their design depending upon whether they are for research or production, upon equipment they must contain, upon the quantity of material used and its specific activity, upon the policy and requirements of the establishment where they are used, and upon the philosophy and background of the designers.

There has been considerable experience at several installations with glovebox systems which use once-through air ventilation in enclosures of questionable tightness and techniques, such as open air transfers, that permit occasional and sometimes serious contamination of the room. Such installations usually cost less to construct and permit greater flexibility and faster work, but these savings are offset by the sacrifice in safety and by the time spent in monitoring and in cleanup so as to keep the radioactivity at a tolerable level. There is also a greater reliance on the human element, since many of the operations are potentially hazardous.

On the other hand, a philosophy of minimizing the formation of fine plutonium particles, of never exposing bare contaminated materials outside the glovebox system, and of never purposely opening the contaminated system to the room leads to a closed leak-tight system with an inert atmosphere and very special transfer and maintenance techniques. Such an approach appears to sacrifice some flexibility and speed of operation but mostly because techniques have not as yet been fully developed.

The British have described[3] two methods of assuring conditions sufficient to contain safely and work with large quantities of dry alpha active materials in a protective atmosphere with less concern for glovebox tightness. One approach consists of essentially a glovebox within a glovebox with the gloves of the outer box inside the gloves of the inner box and with

the pressure of the outer box lower than that of the inner box or of the room. Loss of feel because of the double gloves and difficulties in changing gloves on the inner box make this approach impractical. A variation of this approach which has been used with some success provides for an intermediate chamber between the inner and outer gloveboxes which can be continuously evacuated to a pressure lower than either box and through which a single glove can pass. This approach loses some of the working reach of the gloved hand. The gloves are used only for assembly of apparatus where the experiment is carried out by remote operation with the gloves removed and the glove ports sealed.

B. ANL Plutonium Metallurgy Research Laboratory

The only existing large plutonium handling facility that has used successfully the closed inert atmosphere approach with leak-tight gloveboxes is the Plutonium Metallurgy Research Laboratory at ANL which, in this report, will sometimes be referred to as the Research Laboratory. Operation of this facility for one and one-half years has demonstrated the feasibility of this approach and has pointed up several real advantages especially in safety. During this period of operation no plutonium contamination has escaped from the boxes, so that personnel have never been exposed to high air counts which is, to our knowledge, an unmatched record for work in this field. This approach appears to us to come closest to the requirements of the plutonium powder metallurgist.

The main purpose of this laboratory is to develop and study fuel element alloys containing plutonium or other alpha emitters. The laboratory is fairly complete and diversified. It is equipped to study phase diagrams and has facilities for melting and casting as well as for thermal analysis, dilatometry and metallography. Equipment is available to study workability (rolling, pressing, extruding), machinability, heat treatability, and corrosion characteristics. It is also equipped to study tensile and hardness properties, expansion characteristics, and thermal and electrical conductivity. In addition, the laboratory has been called upon to make numerous test pieces for exponential, critical, and irradiation experiments.

The Research Laboratory design philosophy was governed by several restricting factors. The available room was only 27 feet by 30 feet in a Chemistry Building.[2] Special facilities that require low air counts were located in adjacent rooms. ANL is located near populous areas which means extreme controls of the amount of contamination in waste gases. Since this was to be a research facility, it seemed desirable to study the advantages and disadvantages of an inert atmosphere from the point of view of maintenance and cost, the influence on metallurgical research, and the safety aspects. Also it was desired to study various approaches to glovebox and accessory construction as well as to operating techniques with a view toward applying the information to the design of a much larger facility for fabricating fuel elements.

Stainless steel gloveboxes with specially designed gasket flanges for windows and interbox connections were developed to achieve the desired helium leak tightness. Tightness to a helium-sensitive mass spectrometer leak detector was obtained only after much painstaking and time consuming effort. Figure 1 shows the "E" arrangement of these gloveboxes. Space limitations (the schematic drawing is not to scale - there is actually much less aisle room than is indicated) precluded the use of a transfer corridor; to transfer objects through the system they must be passed from glove to glove. Transfer doors to the room are provided at strategic points in the system to permit replacement of even the largest equipment by special plastic-pouch transfer techniques.

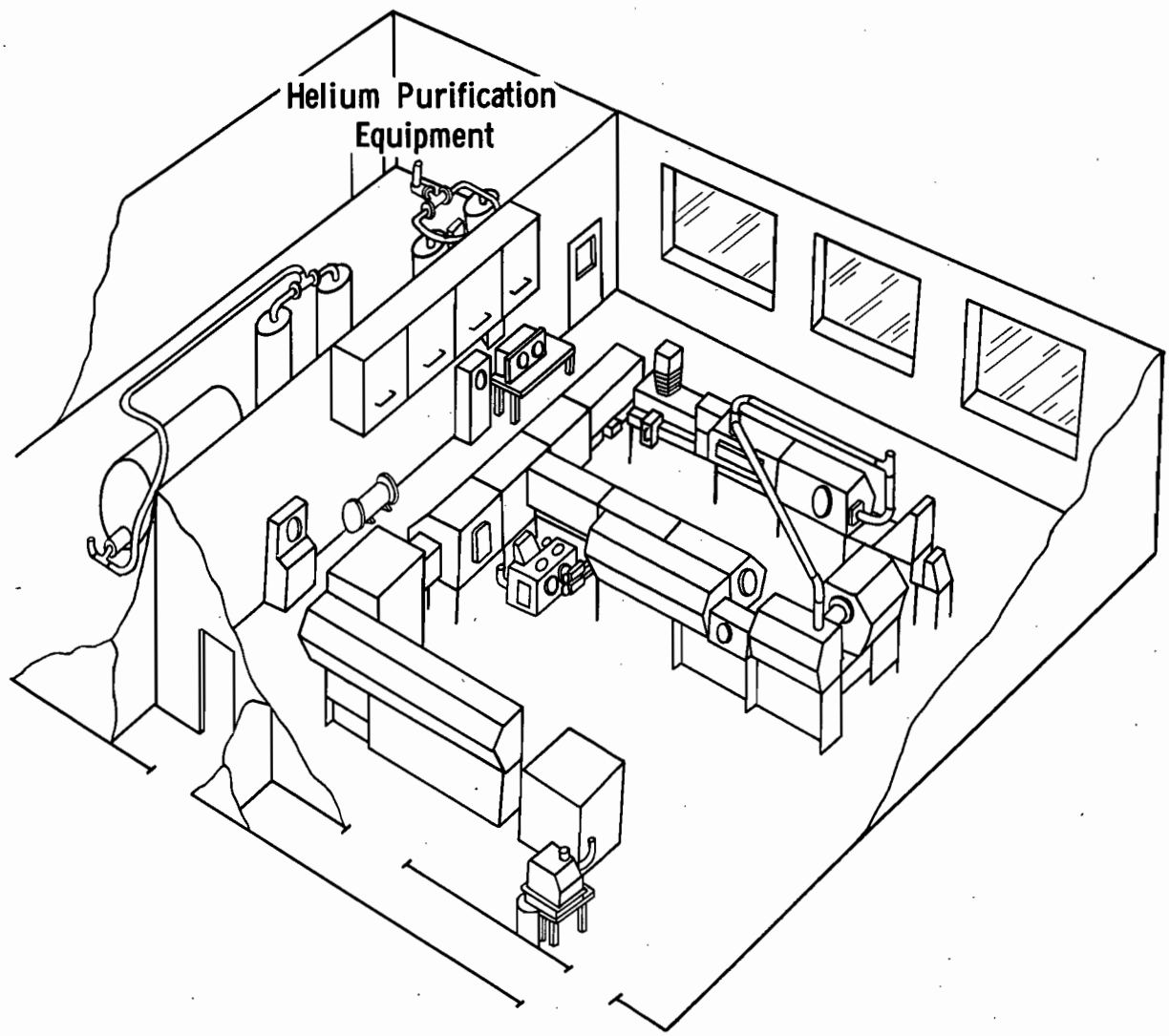

Figure 1

Plutonium Metallurgy Research Laboratory
Showing Glovebox Arrangement

The atmosphere is helium, which is circulated slowly in a closed system through copper plumbing to a regenerative type adsorption purification system and then back to the boxes. Pressure in the boxes is maintained at slightly less than atmospheric by a quick-acting vacuum-pressure system. In addition, there is a safety exhaust system which is called upon automatically in the event that a leak develops in the system or that the normal atmosphere controls do not function properly. Groups of glove-boxes can be isolated from each other so that leaks in one part of the system need not cause shutdown of the entire system.

Figure 2 shows personnel at work in the Research Laboratory.

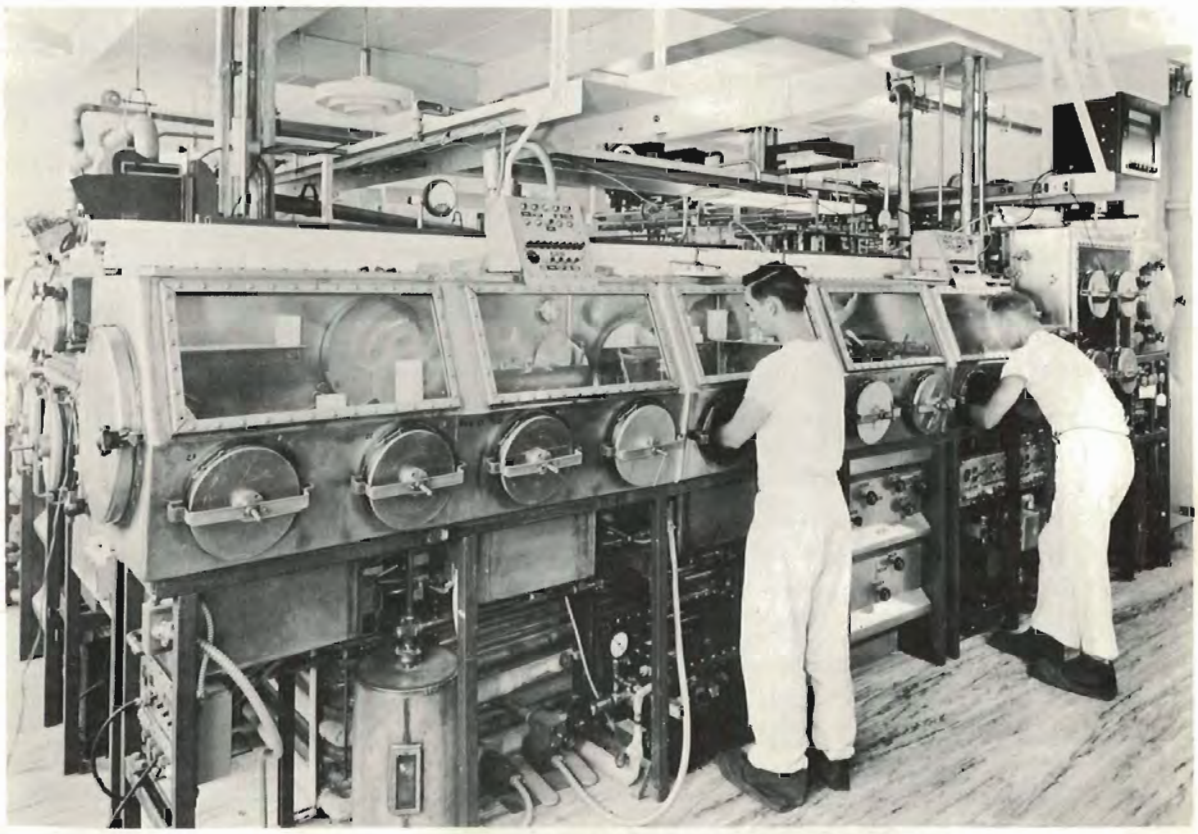

Figure 2

View of the Plutonium Metallurgy Research Laboratory

C. ANL Fuel Fabrication Facility

A versatile, large-scale metallurgical fabricating facility for fuel element work has been designed and is being constructed at ANL. It has been designed with much the same safety and tightness considerations as the above described Research Laboratory. However, the gloveboxes are much larger with much more complex gasketing problems, so that it will be impractical to achieve helium mass spectrometer leak tightness in a reasonable length of time. By comparison with most large-scale glovebox facilities, this facility will be essentially "tight." A combination air-helium ventilation system has been developed for this system. It will be described later.

The fabrication facility, which will be completed early in 1957, will include equipment for melting and casting ingots and shapes, centrifugal casting, rolling, shearing, wire and foil fabrication, press work, machining, electrocleaning, plating, polishing, weighing, and inspection of unclad materials; for welding of the alpha-emitting materials into non-radioactive jackets and for roll bonding, shearing, machining, and welding of the jackets onto nonradioactive core materials. It will also include facilities for the handling of alkali metals and liquid metal bonding media.

Because of the large equipment and the attendant high costs of modification and enclosure, approaches other than the standard glovebox approach were given careful consideration in preliminary studies for this program.

The glovebox approach was finally decided upon mainly because there was more background of experience to draw from and it appeared to offer the maximum of process flexibility while still affording satisfactory protection to working personnel.

Special aluminum gloveboxes of flexible modular design were developed to house the small and large equipment required for fuel element fabrication processes. Figure 3 shows the arrangement of these gloveboxes in the Fuel Fabrication Facility. The central line of gloveboxes is a transportation tunnel or conveyor, 102 feet long, with a specialized line at the left hand side of the figure for the introduction or removal of materials from the system. The branching lines are for various operations on bare alpha-emitting materials. These, with the conveyor line, form a closed system and will entirely eliminate air transfer* of the materials between operations. The branching glovebox will be separated from the

---

*By "air transfer" is meant transfer through the room outside of the contaminated system.

transfer line by large gas-tight sealing valves so that independent operations may be isolated. The entire system will be operated as a totally infinitely contaminated system, since it must be assumed that every item entering the glovebox line becomes immediately contaminated beyond tolerance.

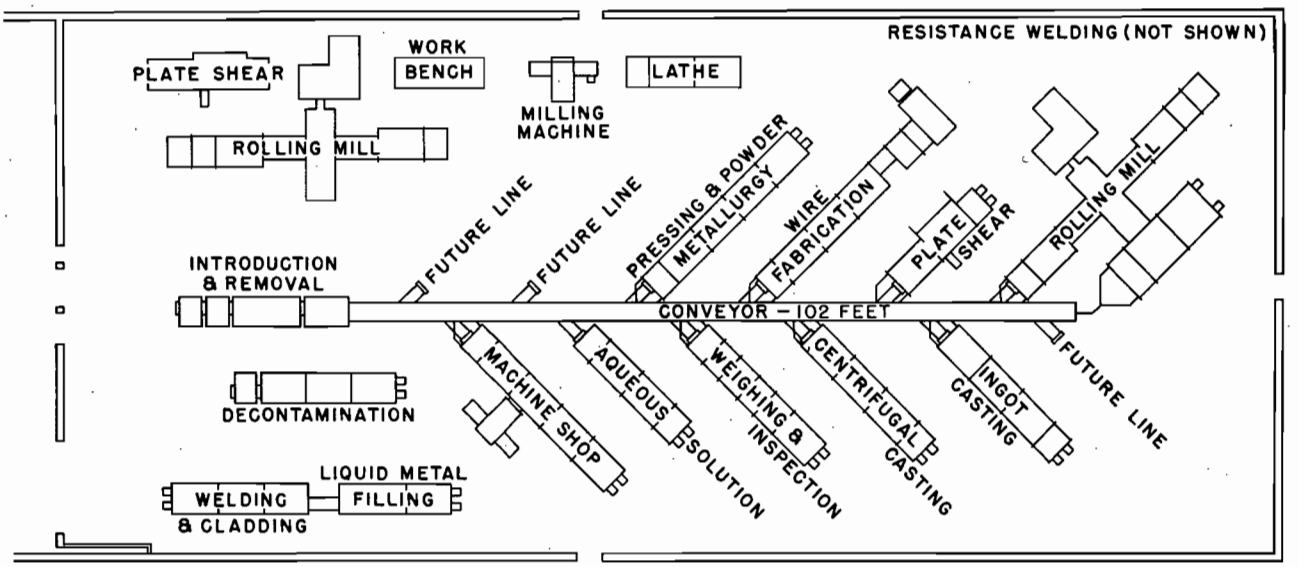

Figure 3

Fuel Fabrication Facility Showing Glovebox Arrangement

The gloveboxes not attached to the conveyor line will be used for jacketing the material in nonradioactive metals, bonding, cladding, welding, machining, decontamination and alkali metals handling. Every effort will be made to keep these gloveboxes at a low level of contamination to prevent or minimize the contamination of tools, materials, and stock and to prevent transfer of contamination to the outside of the jacketed work pieces.

Auxiliary equipment, such as vacuum systems, mechanical drive assemblies and seals, hydraulic systems, which are housed outside of the primary gloveboxes but which may become contaminated through the failure of gaskets or joints, will be housed within auxiliary hood enclosures. Air will be drawn in through efficient glass-fiber filters at the outer end of the glovebox line and drawn out through similar filters near the conveyor. This enclosure provides an auxiliary glovebox space but is not enclosed to the tightness specification of the primary gloveboxes.

V. PRINCIPLES OF SAFE HANDLING OF PLUTONIUM

General rules have been published for handling plutonium in research and production operations as prescribed by the Health Division of the Los Alamos Scientific Laboratory.[4] These rules should be adhered to especially where the procedures are such that occasional air counts exceeding the maximum permissible concentration can be expected. The following principles are emphasized here because they are important to the authors' philosophy of safe glovebox handling of plutonium for metallurgical purposes:

1. All operations must be carried out in tight enclosures which provide for manipulation by means of arm-length gloves aided where necessary by mechanical devices. The system should be so constructed that it will be, and will remain, as nearly leak-proof as possible; and it should be so operated as to prevent the escape of plutonium.

2. The pressure within a glovebox system should be enough less than the room pressure that, in the event of a leak, the in-leakage of air will be at least 150 linear feet per minute.

3. Every precaution should be exercised to minimize, and if possible to prevent, the formation and accumulation of fine particles or dust. The formation of compounds, such as oxides and hydrides, must be closely controlled since they are a main source of very fine particles. Inert atmospheres are recommended to achieve this. Where powders must be handled, as in powder metallurgy applications, particular care must be exercised.

4. Exposure to oxidizing atmospheres, such as air, of plutonium or its alloys that have been prepared in inert atmospheres must be done under controlled conditions since they may be in a pyrophoric condition.

5. Allowance must be made for radiation that penetrates the gloves and thereby limits the time of exposure of personnel.

6. Certain rules for safe practice should be established and insisted upon, and the necessary materials, equipment, and personnel for compliance with these rules should be provided.

Some of these considerations may seem too obvious to mention, but how best to follow these principles is not entirely a matter of common agreement or understanding. Often these principles are compromised because of the pressure of getting a job done. In the past such compromises have in some cases led to extremely time-consuming, hazardous, and costly delays in operations.

VI. MINIMIZING THE HAZARDS OF FINE PARTICLES

In work with oxides, hydrides, or metal powders, the equipment should be designed to eliminate or control dusting wherever possible. If a glovebox should accidentally become open to the atmosphere, there should be a minimum of finely powdered material which can spread contamination, become air-borne, catch fire, or explode. At ANL we have gone to great pains to minimize the fine-particle problem and, as demonstrated by our laboratory experience of complete freedom from contamination, we have been well rewarded for our trouble. It is important to keep the amounts of plutonium-bearing waste to a minimum in any one place. Small chips, powder, and saw fines are brushed up and put into gas-tight containers as soon as possible after they have been produced. In addition, a portable vacuum cleaner is used to clean the more inaccessible places in the gloveboxes. The material collected in these ways is removed from the system in small amounts and given to the proper agency for recovery, storage or waste disposal.

An important and very effective method of minimizing fine-particle formation is to maintain an inert atmosphere in the glovebox system so as to minimize oxidation and compound formation. These materials are brittle and tend to form extremely fine particles to a point where they are easily air-borne. Minimizing the amount of fine particles also simplifies the filtering problem where the gases are circulating. There are also obvious technical advantages to metallurgical processes in reducing the formation of oxide films on metallic plutonium and its alloys.

Studies of titanium, zirconium, thorium, and uranium, metals which might be expected to behave somewhat like plutonium, reveal that up to 12.5 per cent air in helium can be tolerated without fire or explosion hazards.[9] However, much better purity is required to prevent the oxidation that results in objectionable fine particles, and, if the technical advantages of oxide-free surfaces are of interest, impurity levels in the range of a few parts per million are desired.

Moisture is the impurity of major concern in plutonium glovebox work. It has been reported that the presence of even a small amount of oxygen in the helium inhibits reaction with moisture, presumably by the formation of an oxide film which acts as a barrier. However, where the oxygen is essentially absent, there is evidence that the moisture reacts with the plutonium to form an extremely reactive hydride which will catch fire on subsequent exposure to an oxidizing medium such as air. Plutonium hydride is considered more pyrophoric than many other hazardous metal powders and hydrides.[10]

The difficulty of constructing and maintaining a glovebox system tight enough to contain helium and to keep it pure has turned out to be a blessing in disguise. Experience has proved that such a system is plutonium leak tight, and leaks that develop in such places as gloves often can be detected with a mass spectrometer leak detector before contamination leaks out of the system. However, the effort necessary to achieve and maintain such tightness should not be minimized. Also, problems of purifying and circulating helium are more complex than the problems of ventilating the more standard air boxes. However, the authors feel that for many applications, and certainly working with metal powder is one of them, the technological and safety advantages of inert atmospheres far outweigh the disadvantages inherent in their use.

VII. DESIGN AND CONSTRUCTION OF GLOVEBOXES

A. Size, Shape, and Strength

Most existing gloveboxes are designed as single-operator enclosures with glove ports on one side only. If it is desired that the operator be able to reach everywhere in the enclosure with his gloved hand, then the entire inner space must be within about 24 inches of a glove port. At some installations gloveboxes of 30 inches depth are used; this means the operator must use tongs or some other means of extending his reach in order to utilize the back six inches.

The fact that most equipment in the Research Laboratory is relatively small, coupled with the limited space available, resulted in most gloveboxes being a maximum of 24 inches deep. The type of glovebox used is shown in Figure 4. Where extra depth was desired, two such boxes were placed back to back. Unless larger boxes are needed there are some advantages to small boxes. In addition to assuring easy gloved-hand access to all parts of the box, smaller boxes mean more rigidity, and the welds are shorter, which means there are less chances of leaks. Also, smaller gas volumes need be purified where an inert atmosphere is used. However, small gloveboxes never seem to have enough shelf or storage space, and it is often desirable to make larger set-ups than were originally foreseen.

The large, heavy equipment in the Fuel Fabrication Facility requires large, sturdy enclosures. Accordingly, an extremely flexible design of gloveboxes was developed, using a strong rigid frame with heavy plate panel inserts in place of the usual light sheet-metal construction (Figure 5). In general, heavy equipment is supported from the floor, wherever possible, on independent equipment bases. This design consists of standard components from which gloveboxes can be built up modularly to house almost any size equipment ranging from balances and delicate measuring apparatus to rolling mills and hydraulic presses. Standardization of gaskets, flanges,

bolt locations, etc., allows the use of interchangeable end plates, window gaskets, window retainers, and the coupling of gloveboxes into an interconnecting system. A module 36 inches long is used with an interglove spacing (center to center) of 18 inches. In addition there are double modules 72 inches long, but the window size, glove spacing, and most of the components are standard in size.

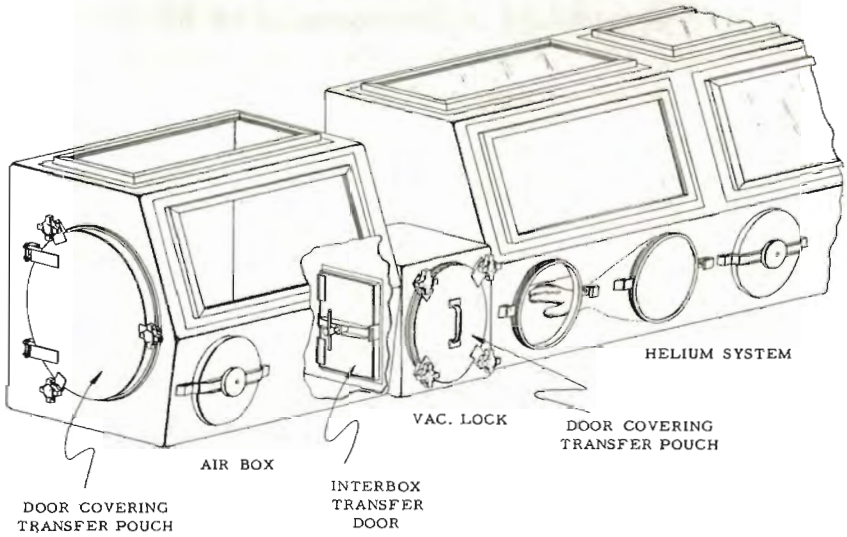

Figure 4

Interconnecting Glovebox and Vacuum Lock Arrangement in the Research Laboratory

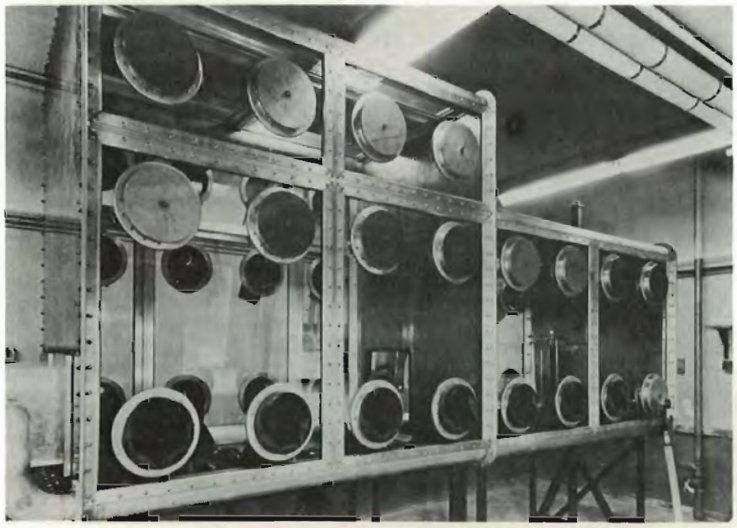

Figure 5

Prototype Fuel Fabrication Facility Gloveboxes

By designing the hoods for operation from two sides, it is possible to increase the width of the hoods to 48 inches, with the advantage that the equipment is fully accessible from both sides. By providing a second, third, or even a fourth tier of glove ports, it is possible to extend the gloveboxes in the vertical direction and by extending the gloveboxes in a line in the horizontal direction even the longest equipment can be housed with standard glovebox components. In a very few cases it was necessary to increase the width of the glovebox beyond 48 inches giving spaces within the hood which could not be reached from the glove ports. In these spaces it was necessary to provide mechanical assistance to the operator.

Three basic standard glovebox modules have been adopted to meet about 85 per cent of the enclosure requirements in this facility. These are: 1) a basic low module, 36 inches long, 48 inches wide, and 48 inches high; 2) a basic high module, 36 inches long, 48 inches wide, and 71 inches high; 3) a transfer module 36 inches long, 32 inches high, and 30 inches wide. This last glovebox is used primarily for the transfer of material to a 100-foot backbone conveyor tunnel. The 48-inch high gloveboxes were provided with two tiers of gloves. The 71-inch high gloveboxes were provided with three tiers of gloves.

B. Materials

The gloveboxes for the Research Laboratory are fabricated from 14-gauge low-carbon (Type 304) stainless steel sheet. It is readily fabricated and welded and provides excellent corrosion resistance. Also, the smooth surfaces are easy to clean, especially since stainless steel permits acid cleaning of contamination from surfaces.

The hard aluminum alloys had the best combination of properties to satisfy the special requirements of the Fuel Fabrication Facility. They are less costly and more easily fabricated than the Type 304 stainless steel, and they have sufficient corrosion resistance for most of the anticipated applications. Resistance to strongly corrosive atmospheres in the few places where they may be encountered will be obtained by protective paints and plastic coatings. Large aluminum plates may be obtained which have a high surface finish and are level in the as-fabricated condition for use as floor plates, partitions, and service panels. Fasteners for gasketing materials are of stainless steel. Tapped holes in the aluminum are reinforced by stainless steel thread inserts.

Whether or not to use glass or plastic for windows depends partly on the plastic being considered, partly on the glass, and partly on the application in question. Safety glass is used for the glovebox windows of the Research Laboratory. Safety glass remains clear and smooth and is easy

to wipe clean. As it is relatively inflexible it requires a flat seating surface or it is apt to crack when tightened. If it cracks, the crack does not go all the way through and therefore does not necessarily present a leak. Safety glass is, of course, relatively impermeable to gases, and systems with safety glass windows are easier to purge and clean than those with plastics.

The plastics most commonly used for glovebox windows are Lucite, a methacrylate resin, and CR-39, an allyl polymer. The windows of the Fuel Fabrication Facility are made of a clear, transparent, cast CR-39 plastic which has a high degree of resistance to scratching, impact, stress crazing, and chemical attack. Lucite has the advantage that it conforms most readily to slightly curved seating surfaces without cracking and it does not chip or crack on slight impact as readily as does glass. It also is easy to machine, whereas CR-39 plastic is considerably harder to machine. Its disadvantages are that its surface becomes easily scratched and roughened, oils and other organics that might be used in gloveboxes tend to cloud its surface, it tends to flow where clamped, it is permeable to helium, hydrogen and moisture, and it ruptures comparatively easily on heavy impacts and explosions.

There is concern about using plastics and synthetic rubbers in glovebox systems of the type under consideration because they are less than perfect and subject to failure. However, there are places where they must be used for want of a better material. Such places include window and glovebox gaskets, other seals, gloves, control instrument diaphragms, and transfer pouches. Neoprene is used in gloves, and type GN neoprene with antioxidant additive is used extensively for gasketing material. Vinyl plastic (polyvinylchloride type) transfer pouches are used in both plutonium facilities at ANL. Polyethylene and cellophane have been used for similar applications at other installations.

C. Visibility

The degree of visibility is important to safe glovebox practice and therefore is a major factor in determining glovebox design. For the sheet metal glovebox where the windows are only part of the front face, there are blind areas on the floor near the front wall if vertical walls and windows are used. This difficulty is avoided in the Research Laboratory gloveboxes by designing the windows to slope out from the top with the lower sheet metal portion of the wall sloping out from the bottom as shown in Figure 4. The glove ports are welded into the lower sheet metal section. The sloping box front enables the operator to observe in a more comfortable position. The Fuel Fabrication Facility type of glovebox, Figure 5, uses windows which extend practically to the box floor, thereby providing a full view. The glove ports are gasketed into the windows. This approach does sacrifice some working comfort while the operator is close to the box.

D. Tightness

Gloveboxes must be essentially gas tight both to protect against contamination leakage and for economic maintenance of inert atmospheres. To achieve tightness to a helium sensitive mass spectrometer leak detector requires the careful joining and gasketing techniques ordinarily used in high vacuum work.[11] The design determines the ultimate tightness possible; the tightness actually achieved depends upon the time and effort spent in going as far as the design permits.

Unrestrained flat gaskets are standard for most gloveboxes. They are not dependable in that the large amount of deformation needed to achieve tightness often causes lateral slippage. Numerous gasket designs were tried before one was developed for the Research Laboratory that could be made tight and would remain tight indefinitely despite vibrations and normal flexing of box walls. Standard O-ring gaskets make excellent tight seals and are recommended for use wherever possible. Unfortunately, glovebox windows and walls are usually rectangular in shape, making it difficult and expensive to round the corners of the gasket grooves so as to achieve a tight seal with a continuous standard O-ring. Very promising results have been obtained recently in experiments with mitered and vulcanized square-cornered O-rings fitted into rectangular milled grooves.

It is important that, when the box is being constructed, leak tightness be achieved without the use of caulking or sealing compounds or mastic tapes. Once such materials are used there is no turning back and often leak tightness is never achieved. The effort necessary to repolish seating surfaces, to remove all cross scratches, and to examine and correct for gasket defects usually proves to be well worth while. The time to use sealing compounds or mastics is when a leak develops after the system is contaminated and there is no other solution. The vacuum technique of applying to the gasket a thin layer of vacuum grease, such as Apiezon N, is highly recommended as an aid to obtaining leak tight joints.

The window gasket design used in the Research Laboratory which has satisfactorily sealed the system for one and one-half years without attention is shown in Figure 6. It is a restrained rectangular cross section gasket with square corners and will be described in detail in the next section. The Fuel Fabrication Facility uses far more gaskets than do most glovebox systems, and the unusual approach used is also described in detail in the next section.

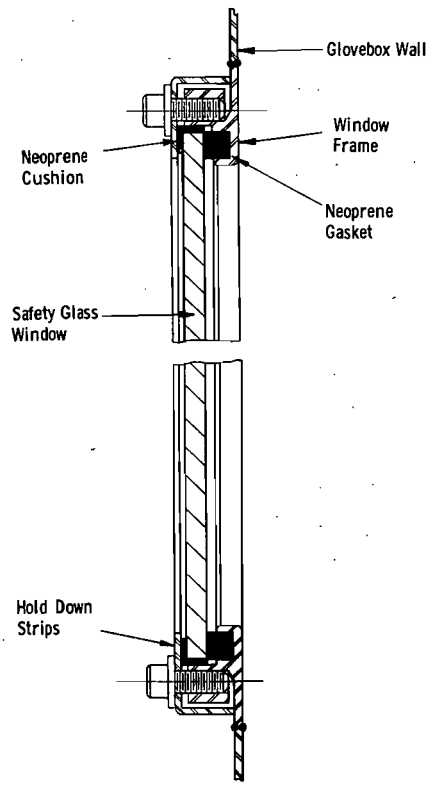

Figure 6

Window Seal for Research Laboratory Glovebox

Seals on tubes, rods, or wires that are fixed and seals on shafts for transmitting motion must receive considerable attention if adequate tightness is to be achieved and maintained. In general, vacuum techniques[11] are adequate provided allowance is made for contamination that might get into the room on withdrawing a contaminated shaft through a seal. Experience has shown that it pays to provide extra openings through which such items can be introduced as insulated electrical leads, movable shafts, or tubing for the passage of liquids or gases. Such openings are often difficult to make after the construction of welded sheet metal gloveboxes has been completed without influencing their tightness. They are especially difficult to make after the insides of the gloveboxes have been contaminated with plutonium. Figure 7 illustrates two such openings which are provided with O-ring gasketed covers on the inside and outside of the glovebox. In Figure 7a the plate that is grooved to receive the O-rings is welded to the sheet metal glovebox wall, whereas in Figure 7b it is O-ring gasketed to the wall. As long as the cover plate inside the box remains tightly sealed, any desired fitting can be gasketed to the outside flange. This permits considerable flexibility in that the glovebox can be extended even though it may be contaminated. If the flanged opening is made big enough, additional

gloveboxes can be attached to extend the system. Where the opening is small, for example, closed end furnace tubes have been attached to the glovebox by means of a water-cooled flange. In this way access is had to the furnace from the inside of the glovebox without the problem of dissipating the radiant heat of the furnace were it inside the glovebox.

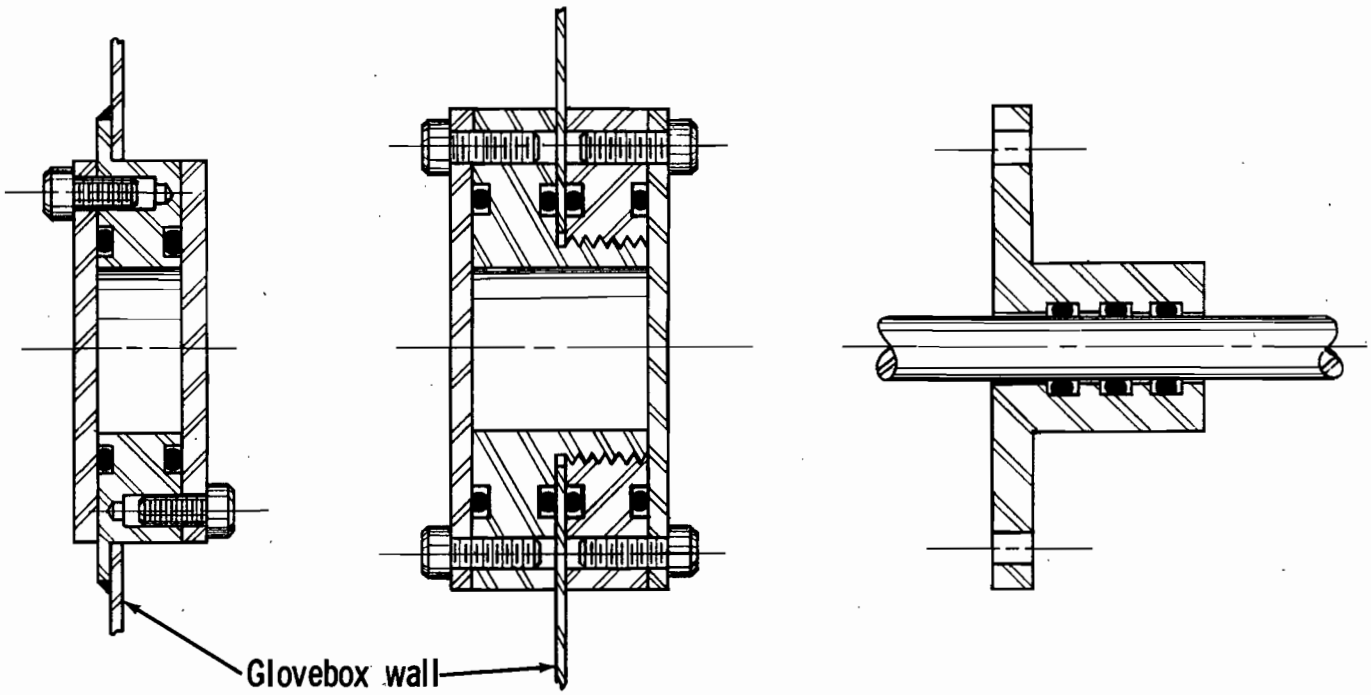

Figure 7

Openings Permitting Safe Entry and Extension of Contaminated Gloveboxes

Figure 7c shows a type of seal that permits passing into the system any desired cylindrical object through a series of O-ring seals without violating the tightness of the system. Note that this procedure cannot be reversed without contaminating the room since anything that has been in the contaminated glovebox must be considered contaminated. Also, if an inert atmosphere must be protected, provisions should be made to minimize the amount of gas trapped between items that are introduced through such a seal. This same seal can be used to transmit reciprocal motion while maintaining a relatively gas tight seal around a cylindrical shaft. In such applications a flexible boot should be provided around the external portion of the seal so attached to the glovebox wall and reciprocating shaft as to contain any portion of the shaft that might be contaminated.

The problem of introducing extra openings through glovebox walls while the system is yet uncontaminated is considerably simplified in the Fuel Fabrication Facility since all service and auxiliary openings are brought in through removable aluminum plate panels which are gasketed to the glovebox frame.

A rapidly turning shaft passing through the wall of a glovebox is not easily sealed so that the seal is safe and permanent. Precisely fitting O-rings have sometimes given excellent service on highly finished rotating shafts, but it is difficult to ascertain in advance whether or not the desired conditions have been attained. Some chevron seals, dynamic grease seals, and bellows sealed wobble shafts have also given good service, but their reliability is always open to question. If rotary shaft seals in a glovebox are required, the driving motor may also be housed and this housing sealed to the wall of the glovebox. A motor housed in this way usually requires gas cooling or water cooling, and gases or vapors from the insulation or lubricant are liable to adulterate the atmosphere of the glovebox.

Because of the disadvantages inherent in shaft seals and housed electric motors, a more satisfactory way to rotate a high speed drive in a glovebox is to employ an oil motor drive. Oil motors, similar to those used in aircraft, are small compared to electric motors of comparable power. They lend themselves to speed control over a wide range and permit easy reversing. A rotating seal is replaced with high pressure oil lines passing through dependable static compression seals in the glovebox wall.

E. Details of Construction

1. ANL Plutonium Metallurgy Research Laboratory

The ANL Plutonium Metallurgy Research Laboratory glovebox system is composed of welded 14-gauge Type 304 stainless steel sheet boxes connected together with O-ring seals wherever possible. The boxes were not welded together because it was desired to permit flexibility and rearrangement and to provide ease of moving the facility, if necessary, to another site. The ends of the boxes were deep drawn with 3/4-inch radii at edges and corners. The side walls were also formed with matching radii. The assembly was fusion welded and the weld surfaces inside the box were ground smooth. The resulting box contains no inaccessible sharp corners or crevices for the lodgment and accumulation of fine particles, and the interior surfaces are smooth and easy to keep clean.

The stainless steel window frame, Figure 6, was assembled by welding mitered corners; a smooth, rectangular-shaped groove was produced by milling and by careful hand dressing of the corners. A lip of adequate thickness was provided on the window frame to assure that the frame could be welded to the 14-gauge sheet metal glovebox with a minimum of warpage.

Some straightening after welding was necessary to be sure that the seating surfaces were in a flat plane. Continuous neoprene gaskets of rectangular cross section, having a 40 durometer Shore hardness and a thickness such as to allow 30 per cent compression before the window is seated, were used.

The window sash for the standard boxes was made of annealed plate safety glass, 3/8 inches thick. Hold-down strips of 12-gauge sheet metal were used with a soft rubber grommet cushion shaped to protect the edges of the glass. A torque of 10 to 13 inch-pounds on hold-down screws, 2-1/4 inches between centers, was necessary to attain leak tightness without the pressure being too localized at the screw.

The rectangular door shown in Figure 8 is used where tight doors were desired between boxes or to isolate gloveboxes from vacuum locks as shown in Figure 4. Circular doors are much easier to seal, but space considerations precluded their use in this application. The door shown is made of dished heavy sheet metal with stiffening ribs. It is hung on floating hinges and has a quick-acting sliding cross bar with central loading for sealing against a restrained neoprene rectangular section gasket.

Glove and transfer ports are described in the following sections on glove and transfer techniques.

Glove port covers, shown in Figure 9, are used to minimize diffusion of moisture and air into the system through the large neoprene surface and also as an emergency cover in the event of a glove failure. It utilizes a simple, quick central screw for closing pressure and seals the cuff of the glove against the smooth edge of the port flange with a soft rubber restrained gasket.

2. The ANL Fuel Fabrication Facility

The design of gloveboxes for the ANL Fuel Fabrication Facility is essentially a frame fabricated from extruded aluminum alloy with inset clear plastic windows for the maximum visibility obtainable in a rigid structure. A prototype assembly of such gloveboxes is shown in Figure 5. Five aluminum extrusions were designed, Figure 10, incorporating gasket grooves, window recesses, bolting flanges, and ventilation ducts in the as-extruded shapes. Details of the seals and gaskets used to assemble these extruded members to each other and to windows and panels are shown in Figure 11. Figure 10 shows the cross-sectional shape of the extrusion used for the lower and upper longitudinal corner members of the glovebox frame. The large outer radius produces a smooth rounded edge. The internal cavity running through the length of the extrusion is used as a distribution duct for the ventilation of the glovebox with either air or inert atmosphere. The longitudinal recesses and channels at the corners of the extrusion

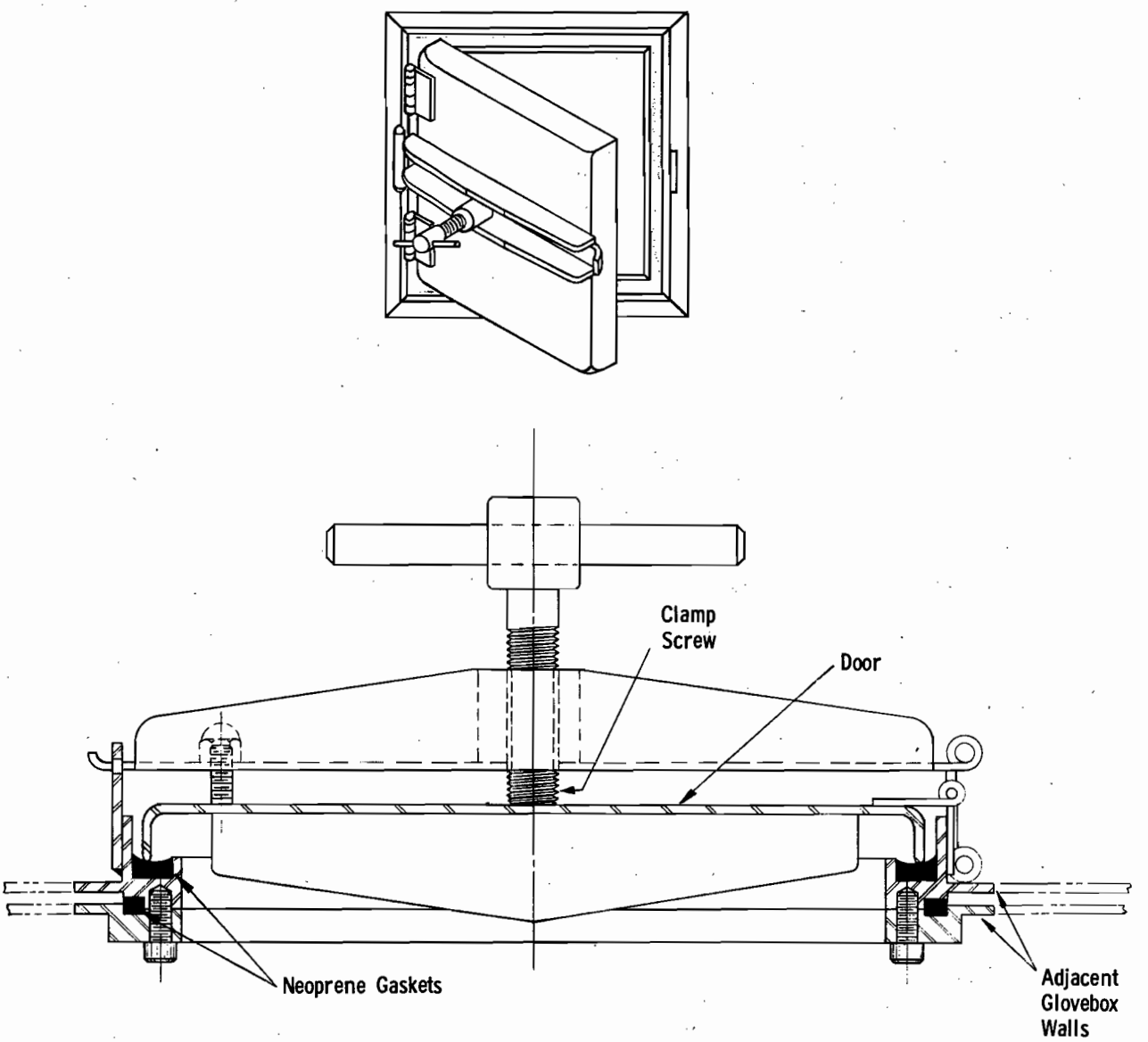

Figure 8

Interglovebox Wall and Door Seals for Research Laboratory

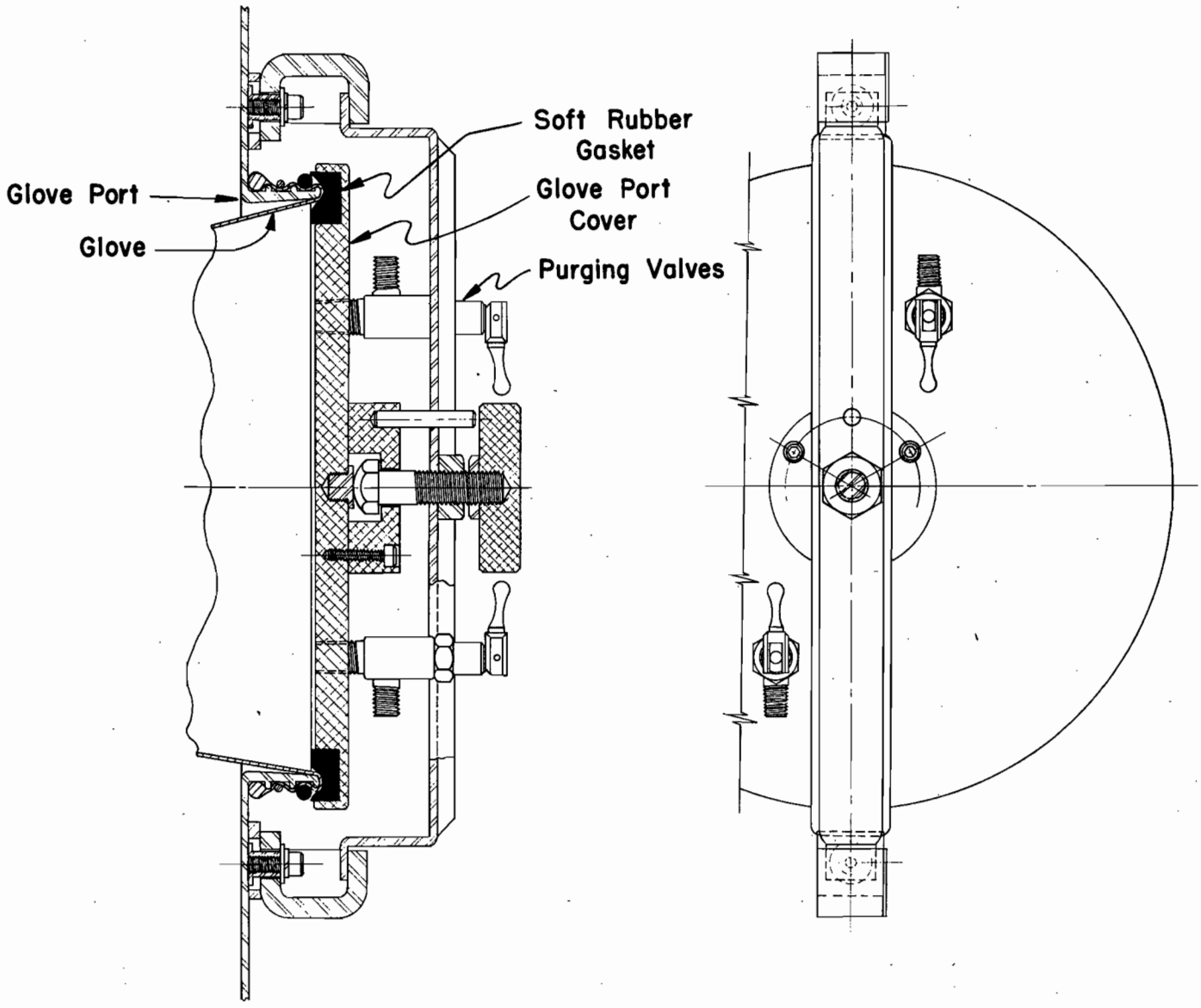

Figure 9

Glove Port Cover for Research Laboratory

allow the installation of cylindrical window gaskets and extruded retaining strips. Figure 12 shows how a window and bottom panel are sealed to a hollow extrusion. This extrusion occupies a quarter round space at the inside longitudinal corners of the glovebox.

Figure 10 shows the mullion bar extrusion used to join two 3/8-inch window panels when used in a double module glovebox or to frame the top windows and service panels. The reinforcing rib down the inner surface of this extrusion contributes to its stiffness and provides a flange for the attachment of various structures within the glovebox.

The two flange extrusions in Figure 10 were designed to form bolting flanges at the ends of the double and single module glovebox, to allow the attachment of end plates or partitions, and for the interconnection of gloveboxes.

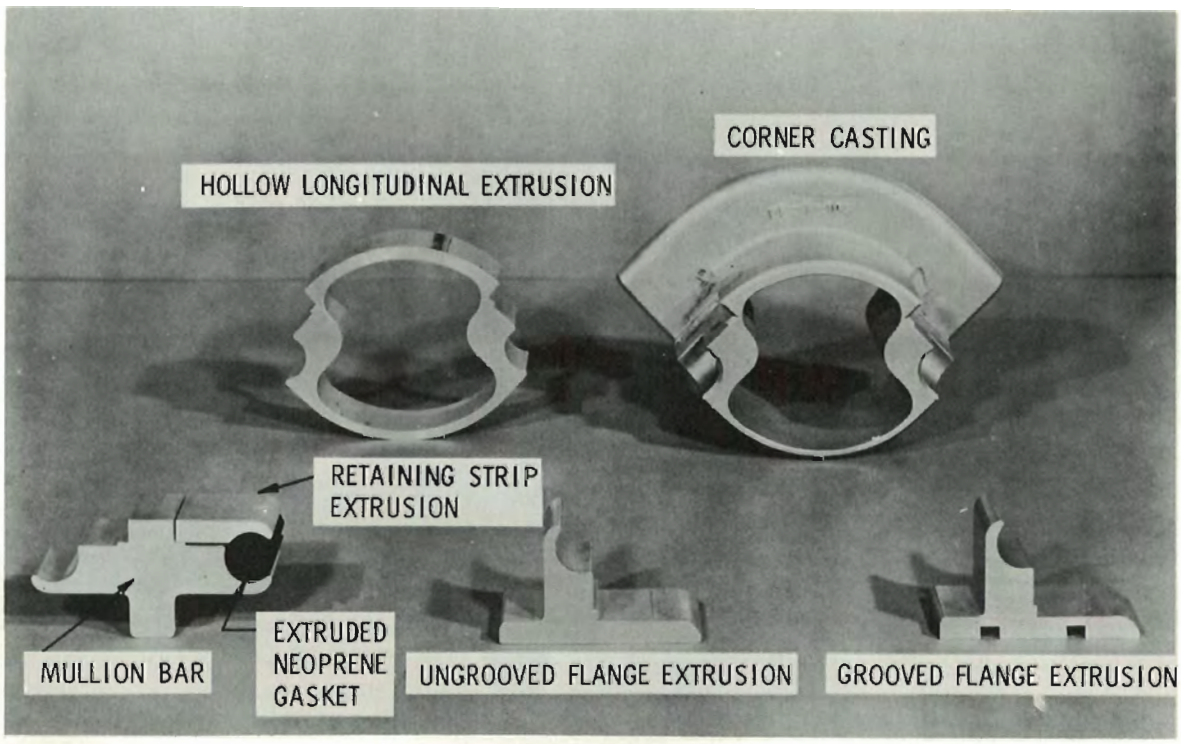

Figure 10

Sections Through the Aluminum Extrusions and the Casting Which Make Up the Frame for the ANL Fuel Fabrication Facility Glovebox

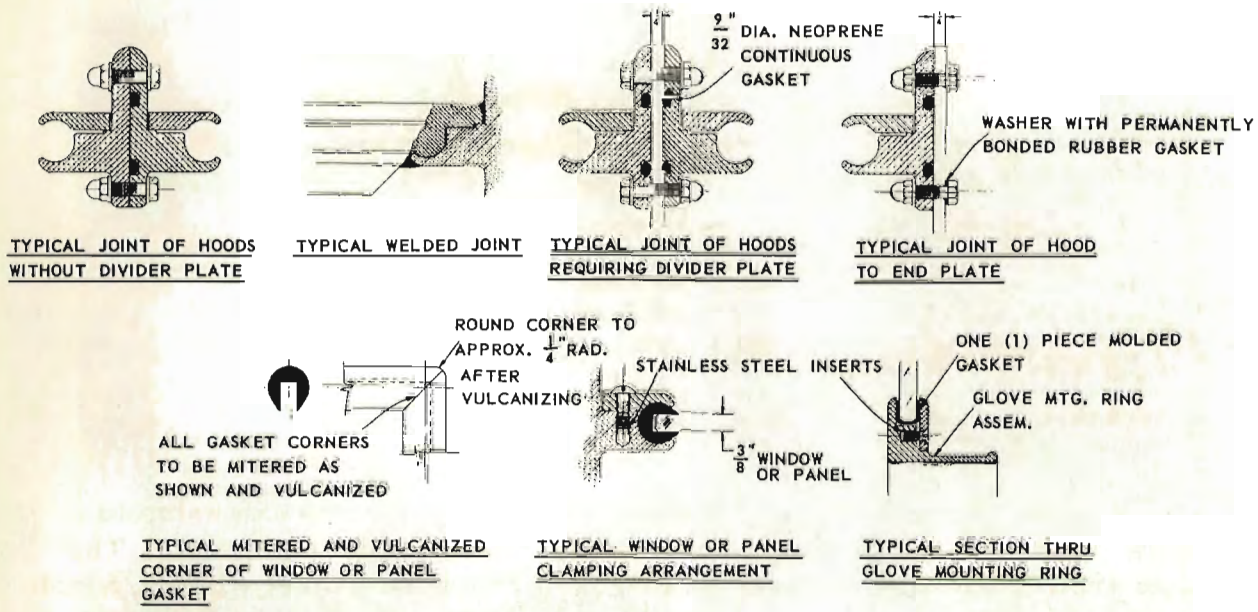

Figure 11

Details of Seals of the Extruded Aluminum Frame Glovebox

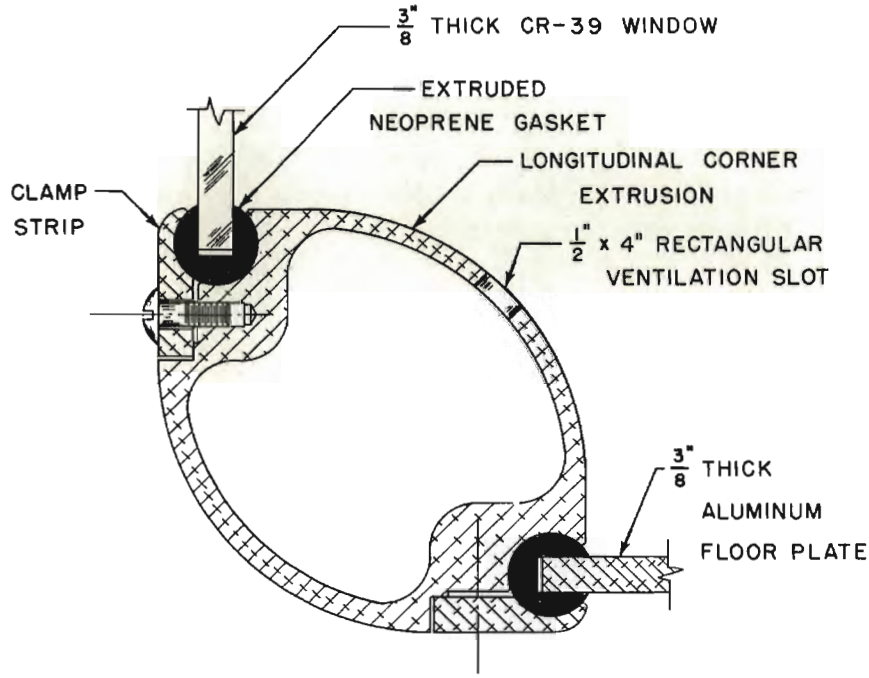

Figure 12

Section Through Hollow Longitudinal Corner Member
Showing Window and Panel Seal

Figure 13 shows the application of a retaining strip extrusion to the window gasket and to the gasket grooves of the frame extrusion. The window groove was designed for an extruded neoprene gasket with a 3/8-inch rectangular channel to accommodate the window panel. This gasket is used for the installation of windows, floor plates, and service panels. The cylindrical shape allows slight misalignment and distortion of the windows, panels, and gasket grooves without producing leakage or undesired localized gasket pressure. The lips on the edges of the gasket channel form a fillet between the window or panel and the frame.

Joining of the flange extrusion and the longitudinal extrusions at the corners requires the use of a casting with the corner gasket and retaining strip grooves molded in place (Figure 10). This casting was made of No. 43 casting alloy. It was designed so that square-cut extrusions can be joined to form a rectilinear structure.

The 61S-T6 alloy was chosen because of its hardness and resistance to nicks and wear. The alloy has some drawbacks for welding. It tends to soften immediately adjacent to the welds, but, since it remains hard elsewhere, this was not considered an objectionable feature. It is weldable but is somewhat liable to shrink-cracking at temperatures near

its welding point. Shrinkage cracks were eliminated in the fabrication of the prototype gloveboxes by the use of No. 43 filler rod (which melts at a considerably lower temperature than the 61S aluminum), by the use of inert-gas shielded alternating-current tungsten arc welds to minimize the heating zone, by preheating the extrusions and castings before welding, by insulating the parts from the welding fixture to prevent too rapid cooling, and by making full penetrating welds.

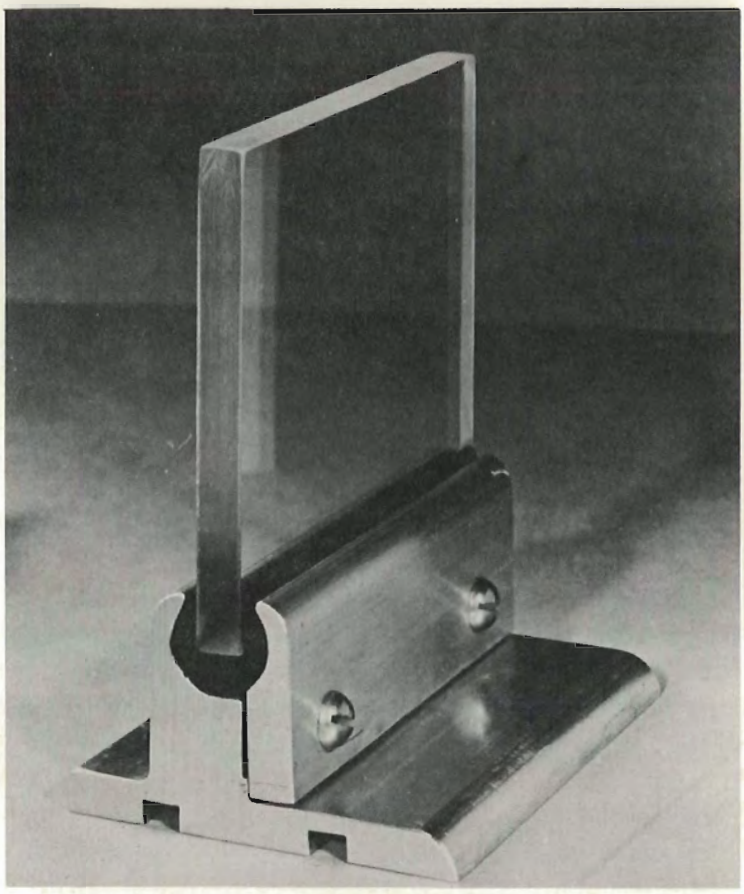

Figure 13

Window Seal for Extruded Frame Glovebox

After welding the glovebox frames, the gasket and flange surfaces were carefully scraped or machined to remove any roughness or interfering weld beads. Care was exercised to maintain the original contours of the gasket grooves and to avoid producing gouges or scratches.

Figure 5 shows a double module 71-inch high glovebox and a double module 48-inch high glovebox set up on a temporary stand for testing. Some of the glove ports are blanked off without gloves to aid in leak testing. Leaks that were located by means of a helium sensitive mass spectrometer leak detector were made tight without employment of caulking compounds or mastic.

VIII. VENTILATION AND ATMOSPHERE CONTROL

A. Air and Inert Gas Systems

Earlier in this report it was noted in the discussion of existing glovebox systems that most of them use once-through air ventilation. This approach presents problems in circulating, air conditioning, filtering, and pressure control; the extent of these problems is dependent upon numerous factors such as quantity and rate of air moved, temperature and moisture content of supplied air, moisture content and pressure desired in the glovebox system, and the maximum permissible concentration of activity in the air that is exhausted to the atmosphere. The more remote from populous areas, the less stringent are the exhaust contamination restrictions. It has been argued that the normal method of removing exhaust air upward from contaminated systems is not satisfactory in that upward flow opposes the natural tendency of the heavy plutonium compounds to gravitate back to their point of origin.[4] The solution which has been used with some success by these proponents is to employ a downward direction for flow of exhaust air. However, there is lack of agreement on the advantages of this approach.[2]

Plutonium fires are minimized in such air systems by the use of coolants and/or by supplying an inert gas locally to operations, such as machining, where high temperatures are generated. However, this is insufficient protection where pyrophoric materials are handled and is totally inadequate from both safety and technical aspects for such operations as working with plutonium powders. Many installations which use once-through air ventilation maintain individual tight gloveboxes so as to be able to carry out a limited amount of work under controlled atmospheres. Atmospheres in such systems have been purified by the use of getters within the system or by recirculating the gas through an external purification train. Other such boxes rely on purging with the desired gas to lower the impurity content of the atmosphere and then working in the glovebox until the impurity buildup due to diffusion, through gloves, etc., requires repurging. It is impractical to carry purging far enough to attain really pure atmospheres. An extension of this approach uses gloveboxes which are so constructed as to permit evacuation. Such boxes are fabricated and sold commercially as "controlled environment units."

Large plutonium handling systems have been constructed by AEC contractors to use relatively impure inert gas atmospheres by a continual dilution method. However, they were unsuccessful because of the large use of gas necessary to keep up with the high in-leakage of air into their leaky systems. By exercising care in obtaining and maintaining a helium leak tight system, the ANL Research Laboratory has succeeded in the continuous use of a pure helium atmosphere. The Fuel Fabrication Facility has been so designed as to be able to use once-through air ventilation or a controlled pure helium atmosphere interchangeably in all or part of the system depending upon the work being done.

B. Considerations in Selecting an Inert Gas

Several gases have been suggested as protective atmospheres for glovebox work. The main ones are nitrogen, argon, and helium. Table II summarizes some of the properties and costs of these gases. There would be real advantages in the use of nitrogen gas, but there appear to be conditions under which nitrogen will react with plutonium sometimes almost as vigorously as does oxygen.

Argon is a comparatively dense gas and can be handled by fans and blowers designed for air. Purification, however, is somewhat of a problem. Adsorptive systems do not perform well with argon since the argon is adsorbed nearly as readily as is oxygen and nitrogen. One recommended method of purification of argon is to react the oxygen with an excess of hydrogen to form moisture which is removed by an adsorption method and then to remove the excess hydrogen and other gaseous impurities by liquifying and rectifying. This appears to be a costly procedure. The chemical methods of purification do not appear attractive, as will be discussed in the next section.

Helium has certain disadvantages but one very attractive advantage. Its low density makes it difficult to circulate by means of fans or centrifugal blowers. Its high diffusivity makes it somewhat more difficult to contain than the heavier gases. The high ratio of constant pressure to constant volume heat capacity, $K = 1.66$, for helium (instead of approximately $K = 1.4$ as for most gases) means that its temperature increases much more in compression than do the other gases (argon excepted), and the negative Joule-Thompson coefficient means that it does not cool on free expansion through an orifice or expansion valve. Advantages of helium are its high heat capacity and its high thermal conductivity. The fact that it can be pumped through filters and pipes with relatively small pressure drop partially offsets the difficulty of pumping. The principle advantage, however, is that there are feasible regenerative methods of purifying helium with good yield and high clean up factor. This was the main reason for the decision at ANL to use helium in our glovebox work.

Table II

PHYSICAL PROPERTIES[1] AND COST OF GASES[2]

Physical Constant	Helium	Argon	Nitrogen	Air
Molecular Wt. M	4.003	39.944	28.016	29.0
Density at 20°C, 760 mm Hg (ρ)				
#/cu.ft.	0.01039	0.1037	0.07274	0.07528
ρ_{Gas}/ρ_{air}	0.138	1.377	0.966	1.000
#g/l	0.1664	1.661	1.165	1.206
Gas Constant, R				
"ft#/#/°R	386.3	38.70	55.16	53.30
Coef. of Expansion				
p/p°C at 760 mm Hg, 0-100°C	0.003665	0.003668	0.003672	0.003665
Specific Heat, C				
Btu/#/°F, c_p	1.25	0.124	0.247	0.241
Btu/#/°F, c_v	0.754	0.0743	0.1761	0.1725
Heat Capacity				
Btu/cu.ft./°F, c_p	0.0130	0.0129	0.0179	0.0181
Btu/cu.ft./°F, c_v	0.0078	0.0077	0.0128	0.0130
Heat Capacity Ratio $c_p/c_v = K$	1.66	1.67	1.40	1.40
Viscosity				
Centipoises at 20°C	0.01941	0.02217	0.01748	0.01827
Boiling Point°C	-268.9	-185.7	-195.8	
Cost $/cu.ft. (7-13-55)	0.015	0.10	0.006	

[1]Compiled from
(a) Perry, J. H., Chemical Engineers Handbook
(b) Handbook of Chemistry and Physics
(c) Mark, L. S., Mechanical Engineers Handbook

[2]Prices from the ANL Purchasing Dept., 7-13-55

C. Helium Purification Methods

The methods of purification of helium that have been investigated at ANL include:

(a) Chemical purification by reaction of the impurities with various liquid or solid gettering materials.

(b) Cryostatic purification, involving condensation of heavier molecules by cooling the gas to the temperature of liquid nitrogen.

(c) Adsorption on activated carbon at or near the liquid nitrogen temperature and at atmospheric pressure with regeneration of the carbon by warming to room temperature.

(d) Adsorption on activated carbon at normal refrigeration temperatures (-20°F to -40°F) and at elevated pressures (6 to 40 atmospheres) with regeneration of the carbon by evacuation without changing the temperature.

The major objection to the getter approach is that the chemical reaction is irreversible, so that sizable quantities of radioactively contaminated, chemically active materials must be replaced and disposed of. Getter materials that have been considered for the chemical purification method include such metals as uranium, titanium, zirconium, calcium, lithium, sodium, and sodium-potassium eutectic alloy. Elevated temperatures are necessary for most of these materials to be effective. Such problems as dusting of the solid metals and difficulties of containment at the required high temperatures made the bubbling of gas through the molten, low-melting metals appear more attractive. Several large scale experiments revealed that molten lithium removes water, oxygen, nitrogen, hydrogen, and other impurities quite efficiently. However, above the melting point of lithium, it and its oxide and nitride are so corrosive that no reasonable container material was found. The sodium-potassium alloy was easy to contain but does not remove nitrogen and hydrogen. Full-scale tests revealed that a difficult-to-remove aerosol was formed on bubbling helium through the liquid alloy.

The cryostatic purification method (b) is used extensively in helium producing plants where it is supplemented by method (c), adsorption on activated carbon at liquid nitrogen temperatures.[12] Method (c) has been used successfully for over one and one-half years in the Research Laboratory. With the slow gas flow used, almost any desired purity can be achieved. However, an unfailing supply of liquid nitrogen must be available which, though not a serious problem when used at the rate of less than 100 liters/day in the Research Laboratory, would require a nitrogen-producing plant

if used on a much larger scale. Also, the regeneration cycle is slow and wasteful of liquid nitrogen, since it involves warming the activated carbon to or above room temperature to release the adsorbed gases. Further, means must be provided to remove water from the parts of the system that are cooled by the liquid nitrogen even though an efficient drier is used preceding the activated carbon system. In the Research Laboratory, activated alumina lowers the dewpoint of the helium to at least -80°F; accumulation as ice of the moisture that does get through the drier into the colder parts of the system results in increased pressure drop and an eventual need to remove the moisture.

The Fuel Fabrication Facility is much larger than the Research Laboratory, making the purification problems more difficult. The present design is in the direction of method (d), adsorption on carbon at elevated pressures and at normal refrigeration temperatures. This method was the result of chemical adsorption studies reported by Field and Wells.[13] They recommended purification by adsorption on activated carbon at approximately 150 psig and -20 to -40°F with cooling accomplished by Freon refrigeration.

Obvious advantages of the method are: 1) at 10 to 11 atmospheres the partial pressures of both moisture and gaseous impurities are increased to the point where comparatively small equipment can be used; 2) the activated carbon towers operate at a temperature above the dewpoint of the drier so that there is no frost problem; 3) regeneration of the charcoal towers is by evacuation at the constant temperature range of -20 to -40°F, so that a rapid 30-minute adsorption, 30-minute regeneration cycle is possible. This greatly increases the effectiveness of the process and permits the use of small adsorption equipment. Disadvantages of the process are: 1) a large amount of mechanical equipment is involved; 2) a high-pressure piping system must be helium tight; 3) a large quantity of cooling water is necessary for the refrigeration unit and compressors.

D. Atmosphere Control in the ANL Plutonium Metallurgy Research Laboratory

The helium-circulating and pressure control system used in the Research Laboratory is shown schematically in Figure 14. The two gloveboxes shown connected with parallel plumbing are used to represent the entire system of 18 interconnecting gloveboxes with a total volume of about 280 ft^3.

1. Helium Circulation

The helium leaves each glovebox through an efficient fiber filter at the rate of about 1 cfm/box (20 cfm for the system), is pumped by graphite vane rotary pumps through a closed loop of silver-soldered copper plumbing to a drier, heat exchanger, and purifier, then back to the glovebox system.

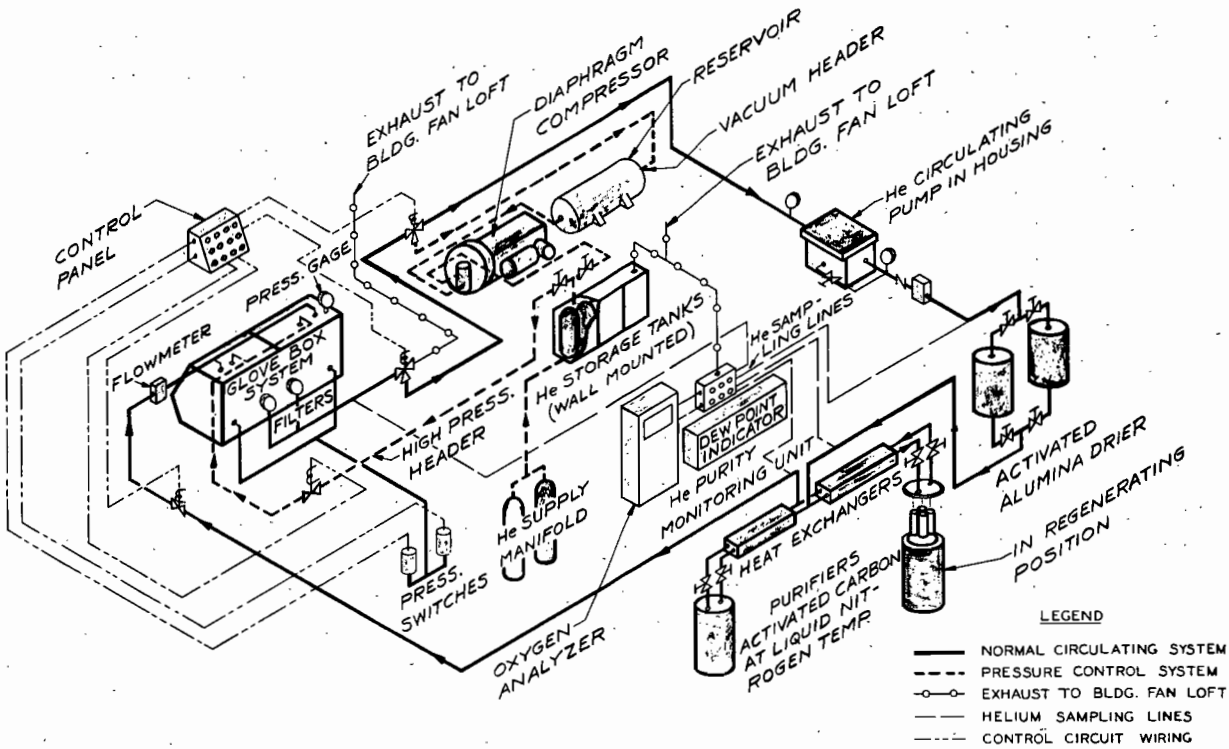

Figure 14

Schematic Helium Circulating Pressure Control System of the Research Laboratory

2. Pressure Control

The pressure is controlled at between -0.5 and -1.5 inches of water by means of a superimposed pressure-vacuum system. If the pressure exceeds -0.5 inch of water, a sensitive pressure switch actuates a solenoid valve connected to a vacuum chamber which rapidly evacuates enough helium from the system to return the pressure to the proper range. If the pressure falls below -1.5 inches of water, a similar quick-acting system permits rapid introduction of the proper amount of helium from a pressure chamber. An automatically operated stainless steel diaphragm compressor transfers to the pressure chamber the helium that is taken into the vacuum chamber thereby conserving helium.

3. Emergency Ventilation

An emergency exhaust system is also provided; this consists of a line to the building fan loft which is maintained at -9 inches of water by a booster blower provided with its own standby power generator. The system automatically calls on this emergency exhaust if the pressure remains too long above -0.5 inch of water (or any other desired limit), or if

the oxygen content in the helium increases beyond a predetermined level, either condition indicating a possible leak in the system. Also, if there is an interruption in the normal power supply to the controls, the system will switch automatically to the emergency exhaust. Whenever the emergency exhaust is called upon, groups of gloveboxes are automatically isolated from each other so that, should there be a leak, the entering air in the defective group cannot adulterate the helium in the balance of the system. The defective group can be valved off manually so that normal operation of the rest of the system can be continued.

4. Purification System

Purification is accomplished by an adsorption system consisting of activated alumina[14] driers followed by activated carbon at liquid nitrogen temperatures. The system efficiently removes water, oxygen, nitrogen, hydrogen, and other impurities including volatile organics. In normal operation of the glovebox system, the main sources of these impurities are diffusion through the large surface area of the 60 gloves and entrainment with items that are insufficiently outgassed prior to transfer into the system. Aside from the use of glove-port covers, no appreciable effort has as yet been attempted to minimize these sources of impurities. Nevertheless, the impurities in the glovebox atmosphere can be held with ease to less oxygen than is normally found in commercial tank helium (10-20 ppm) and less than -50°F dewpoint (approximately 100 ppm water). Actually, the concentration of oxygen and of moisture in the helium as it leaves the purifier is less than a few ppm.

The drier is one that is commercially available but has been reworked for tightness, having two columns of alumina in parallel to permit continuous operation; one can be regenerated while the other is adsorbing. Regeneration is accomplished by internal recirculation of heated helium through the alumina and then through a condenser.

The helium is then cooled in a heat exchanger by flow countercurrent to the helium that is returning to the gloveboxes from the liquid nitrogen-cooled purifier. This effects a considerable savings in liquid nitrogen as well as warming the helium returning to the system, thereby preventing sweating of the plumbing and box walls. The heat exchangers are very efficient, standard commercial units that are made of corrugated aluminum. They are insulated with Santocel (a silica aerogel).

The activated carbon (about 20 mesh) of the purifiers is contained in six-inch diameter by two-foot long aluminum cylinders. Four of these are immersed in liquid nitrogen contained in large vacuum Dewars made of steel, about 18 inches I.D. x 4 foot long. The precooled helium first passes through aluminum tubes immersed in liquid nitrogen so as to cool the helium to -195°C, and then passes downward through two of the

carbon columns in parallel, then up again through aluminum tubing for another downward pass through the other two carbon columns. Thus the helium traverses a long carbon path without suffering appreciable pressure drop.

The liquid nitrogen level is maintained automatically by means of oxygen-vapor thermometers(15) in the Dewar which operate a solenoid valve(16) to permit flow of liquid nitrogen from a 1000-liter storage vessel. The liquid is forced through a transfer line by the pressure in the storage tank. A vent from the covered top of the Dewar allows the vapor from the boiling nitrogen to escape. The system uses less than 100 liters of liquid nitrogen per day.

Two such purifiers are used in parallel to permit continuous operation. Each has its own heat exchanger. To regenerate the carbon the Dewar is dropped away from the stationary carbon containers, permitting them to warm up to room temperature. The liberated gas is evacuated through high-efficiency CWS filters to the exhaust fan loft. If water has accumulated, it can be driven off by heating the carbon above 100°C.

5. Air Ventilation

Some of the Research Laboratory functions necessitate aqueous techniques: examples are electrolytic polishing and etching and solution of samples from which aliquots can be taken for chemical analysis. Therefore, four gloveboxes of the helium system have been designed with air ventilation to accommodate aqueous work, and provision has been made that helium can be used if nonaqueous techniques are developed. Also, equipment outside the system which might be a source of contamination is housed in tight gloveboxes and provided with air ventilation. Air is drawn through these enclosures and exhausted by means of standard blowers to the fan loft with a negative pressure in the boxes of -0.5 to -1.5 inches of water, being determined by the pressure drop in the filters.

E. Atmosphere Control in the ANL Fuel Fabrication Facility

Ventilation for the Fuel Fabrication Facility consists of the following: 1) a once-through filtered air ventilation system, 2) an automatic standby emergency air ventilation system, 3) a recirculating helium system using regenerative type adsorption purifiers with provisions to replace the air ventilation in any part or all of the facility, and 4) a once-through filtered air system to ventilate the contamination risk equipment housed outside the glovebox system. The gloveboxes in which the unclad alpha-radioactive materials are worked will be operated at a negative pressure of between -0.6 inch to -0.8 inch of water, whether operated with air or with helium atmosphere.

1. Filtered Air Ventilation of the Primary Gloveboxes

The glovebox air ventilation system will draw a maximum of 120 cfm of room air through the damper filters at the outer ends of each glovebox line, and the pressure will be controlled by adjustment of outlet and inlet dampers and by utilizing the pressure drop through the filters. The filtered air will be distributed through the hollow cavities in the lower longitudinal extrusion and introduced into the glovebox modules through adjacent slots. The air will ventilate the glovebox and be withdrawn through similar slots in the upper longitudinal extrusions and carried through the upper extrusion cavities and the duct pipe to the outlet filter housing above the conveyor enclosure. After filtration through high-efficiency filters, the air will pass a rubber-lined butterfly valve which will serve the dual function of providing a positive shut-off of the air system when the gloveboxes are operated with inert gas and as a balancing damper. It will then pass through a short run of pipe to the main exhaust ventilation header which will be maintained at a static pressure of approximately -2.0 inches of water. The exhaust air then will be passed through final AEC high-efficiency filters and a vortex damper-controlled exhauster which will discharge to a common plenum and the 100-foot stack to the outside of the building.

2. Emergency Ventilation

A standby ventilation system is required and it was determined early in the design studies to make this a true emergency system which will be capable of taking care of an accidental or a deliberate break in the glovebox system. This system consists of a purge blower, prefilter, and final filter system, installed in the fan loft, which will operate continuously at essentially no flow. The purge of ventilation equipment at the gloveboxes includes a gas-tight, rubber-lined, 10-inch diameter butterfly valve operated by a pilot-positioned damper motor. This, in turn, is controlled by means of a pneumatically operated static pressure controller with a control tip in the gloveboxes and a reference tip in the room. This controller will be set to control the valve to maintain an approximately 400-foot per minute velocity head between the outside and the inside of the glovebox, but, when the gloveboxes are operating with -0.6 to -0.8 inch of water, to close fully and seal. Since the blower and filtration system are sized at 3000 cfm, 400 feet per minute velocity will be maintained for up to approximately 7 square foot open area. Removal of a window will open an area of approximately 10 square feet, reducing the velocity to 300 feet per minute. Two windows removed from the hood will reduce the velocity to 150 feet per minute, which is considered the minimum to prevent the outward diffusion of contaminated particles. Separate purge systems will be attached to the alpha radioactive work gloveboxes and to the clad work gloveboxes. Both systems will be similar in function.

3. Helium Atmosphere System

Present plans are to use a recirculating pure helium atmosphere that can be used interchangeably with the once-through ventilation in all or part of the system. The helium will be purified by adsorption of moisture on an activated drying agent and then by adsorption on activated carbon at normal refrigeration temperatures (-20 to -40° F) and at elevated pressures. It is hoped to increase the efficiency of this process by using the peculiar thermodynamic characteristics of helium to regenerate the drying towers as well as to act as its own refrigerant. Regeneration will be accomplished by evacuation while the activated carbon is still under refrigeration.

4. Subhood Ventilation

The room ventilation will be a once-through system taking air from outside, filtering, cooling it to reduce the moisture to below 50 per cent relative humidity at 80° F, reheating, and discharging into the room. The excess building ventilation not required for ventilation of the primary glove-boxes will be carried through the paneled spaces beneath the boxes to cool and ventilate the contamination risk equipment housed in these spaces. A slight negative pressure will be maintained in the spaces by the introduction of air to the enclosures through glass wool filters. The air will be prefiltered through similar glass wool filters before exhausting to the general building exhaust system. The final filters of the general building exhaust system will be high efficiency filters.

F. Auxiliary Equipment

1. Pumps and Compressors for Helium

The pumping of helium gas presents several problems not encountered with other gases. 1) Since the density of helium is approximately 1/7th that of air, a centrifugal blower will produce slightly less than 1/7th the pressure head as when used with air. 2) The isentropic temperature rise with compression is greater than that of the more common gases. 3) Positive pressure blowers must "seal" much more tightly (have small clearances) to prevent back slippage. For these reasons it has been difficult to get the manufacturers of either centrifugal or positive displacement pumps to recommend their products for helium pumping.

For small systems, positive displacement pumps, including the rotary vane, piston, and diaphragm types, have been used satisfactorily. The ANL Research Laboratory uses standard, inexpensive rotary graphite vane pumps for circulating purified helium. These pumps require no lubrication . Unfortunately, they do not have indefinite service life and, therefore, must be designed for easy replacement. When used with air, these pumps

have a service life of at least two years, but when used with helium they have a much shorter and unpredictable service life. They are especially susceptible to shock or pulsation, especially at high pressure differentials.

The pumps are not helium tight to the outside and therefore must be housed. By taking precautions to assure a minimum of pulsation or shock and pressure differential and by adequate cooling together with filtering to prevent loose particles from entering the pump, a service life of two to six months can be expected.

For very slow flows but for high pressure differentials across the pump, diaphragm pumps have been used very successfully. For about one year the ANL Research Laboratory has used such a pump with a 14-inch stainless steel diaphragm. These pumps are normally used for handling liquid chemicals. We have used it to compress helium from the vacuum chamber and store it in the pressure chamber. Spherical valves and valve seats are made of two types of stellite to insure long life with minimum wear, sticking, and friction.

For large systems a multistage turbine type of compressor appears to be the answer. The circulating blowers chosen for use in the Fuel Fabrication Facility are seven stage turbocompressors which, at 3500 rpm, will handle 1000 cfm each with a pressure head of approximately 0.65 psi. Two of these units will be used with an aftercooler after each compressor. Cross over connections and valves will be provided so that 1) one blower may be used while the other stands by, 2) both blowers may be used in parallel to move up to 2000 cu ft per minute of helium at 0.65 psi, or 3) the two blowers may be used in series with the aftercooler of the first becoming the intercooler between them. When used in this manner, the compressors have been calculated to produce 1.15 psi pressure head at 1000 cfm. One desirable characteristic of this type of blower is that the pressure curve is nearly flat from the surge point to the rated capacity. Surging will occur at approximately 40 per cent rated flow.

2. Valves

Manual valves which meet requirements of vacuum systems are normally satisfactory for use in the type of helium circulation system under consideration. A standard, commercially available, bellows-sealed valve with an O-ring seat and a port and stroke equal to the diameter of the tubing to which it is connected is used extensively in the ANL Research Laboratory helium circulation system.

A number of valves were designed and built to meet the need for two- and three-way solenoid valves having long life, minimum maintenance, and low flow resistance. They were designed to operate on

28 volts D.C. The solenoid plunger is housed in an O-ring sealed stainless steel container and the energizing coil is on the outside of the housing, (Figure 15). These valves have been cycled over 100,000 times without failure.

3. Filters

Filters are used in high-level alpha systems to minimize the spread of contamination through the system as well as to reduce, to a safe level, the escape of contamination in exhaust gases. In closed systems such as the ANL Plutonium Metallurgy Laboratory, very little gas is exhausted to the atmosphere and filters are used mainly to protect parts of the system from contamination, thereby making maintenance easier. For once-through air ventilation systems the need for filtering increases directly as the amount of exhaust gases increases. The problems of filtering for such systems are accentuated in populated areas.

The basic requirements for gas-cleaning equipment and the relative merits of various approaches have been reviewed by Silverman.(17) Dry filtration systems have been found to be the most effective where plutonium is involved. Wet filtration and electrostatic precipitation have also been used and found to have limitations. The properties of gas filtering media have been the object of considerable study.(18) Table III summarizes performances which may be expected from some high-efficiency dry filters.(17) Since these data were compiled, an all-glass-fiber fireproof filter has been developed with performance comparable to or better than the cellulose asbestos paper filters.(19)

Effective filters gradually plug and their resistance to gas flow increases. Even though this improves their efficiency, excessive pressure drop eventually requires replacement of the filter. To replace a filter cartridge without allowing appreciable contamination to enter the filter housing and attached plumbing requires care and forethought. The use of roughing prefilters is recommended to extend the life of the filters and thereby reduce the number of changes required.

The extremely small particle size anticipated for plutonium powder metallurgy work makes imperative the selection of the most efficient filters available. For very low gas flow rates, as in our closed laboratory system where recirculation of the helium is only for the purpose of purification, pressure drop is a minor problem and the filter assembly shown in Figure 16 has been very successful. This filter assembly consists of a layer of American Air Filter Company 25G fiberglass prefilter, five layers of 50G fiberglass filter, and one layer of Chemical Warfare Service (CWS) asbestos paper filter enclosed on both sides with plastic screen. The small area of these filters, only 0.1 ft^2, presents no pressure drop problem for

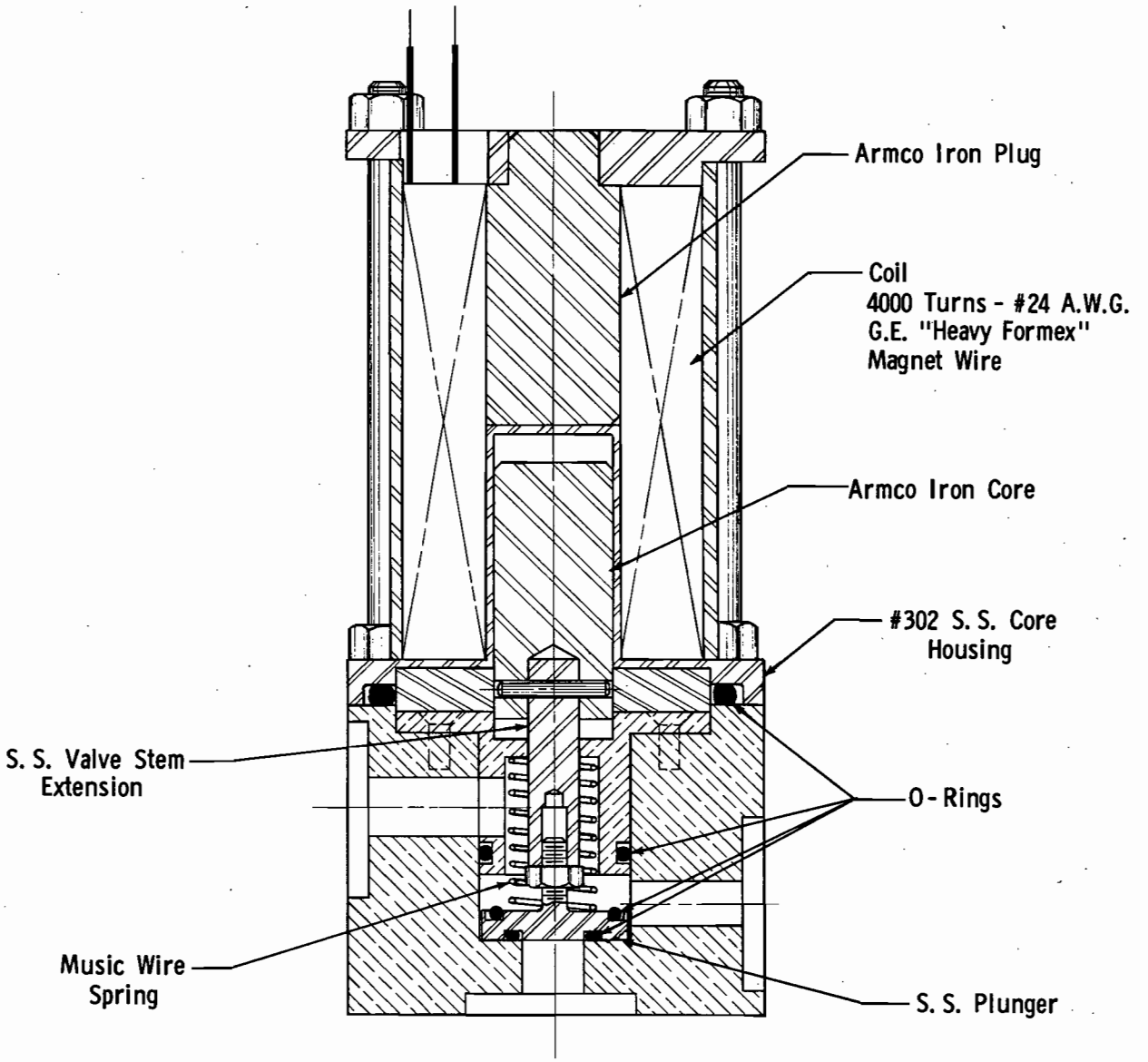

Figure 15

Three-way Direct Current Solenoid Valve for the Research Laboratory Helium Control System

normal operation. However, it does limit the amount of gas that can be evacuated from the system in case of an emergency such as a leak in the system. To handle such emergencies filters of larger area should be used if space will permit.

Table III

HIGH-EFFICIENCY DRY FILTERS[17]

Medium	Test aerosol	Air velocity (fpm)	Resistance (in. of water)	Efficiency (%)
Cellulose Asbestos paper CC-6	Methylene blue	4	1.0	(discoloration) 99.9871
	DOP	5.25	1.0	(penetrometer) >99.9
AEC	Normal air	5.25	0.8	(count) 99.98
Sand*	Cell ventilation gases	3-5	4.5-5.5	(radioactivity) 99.5-99.8
Composite Glass wool	Process off gases	20	4.0	(radioactivity) 99.9+
Compressed glass fiber**	Normal air	5.25	0.69	(count) 99.997
Resin wool***	Normal air	14	0.3	(discoloration) 99.6

*69 inches deep; graded sizes from 2-1/4 inch to 50 mesh.

**0.02 inch thick; 50 per cent 1.3-μ and 50 per cent 3-μ fibers.

***1/8 inch thick.

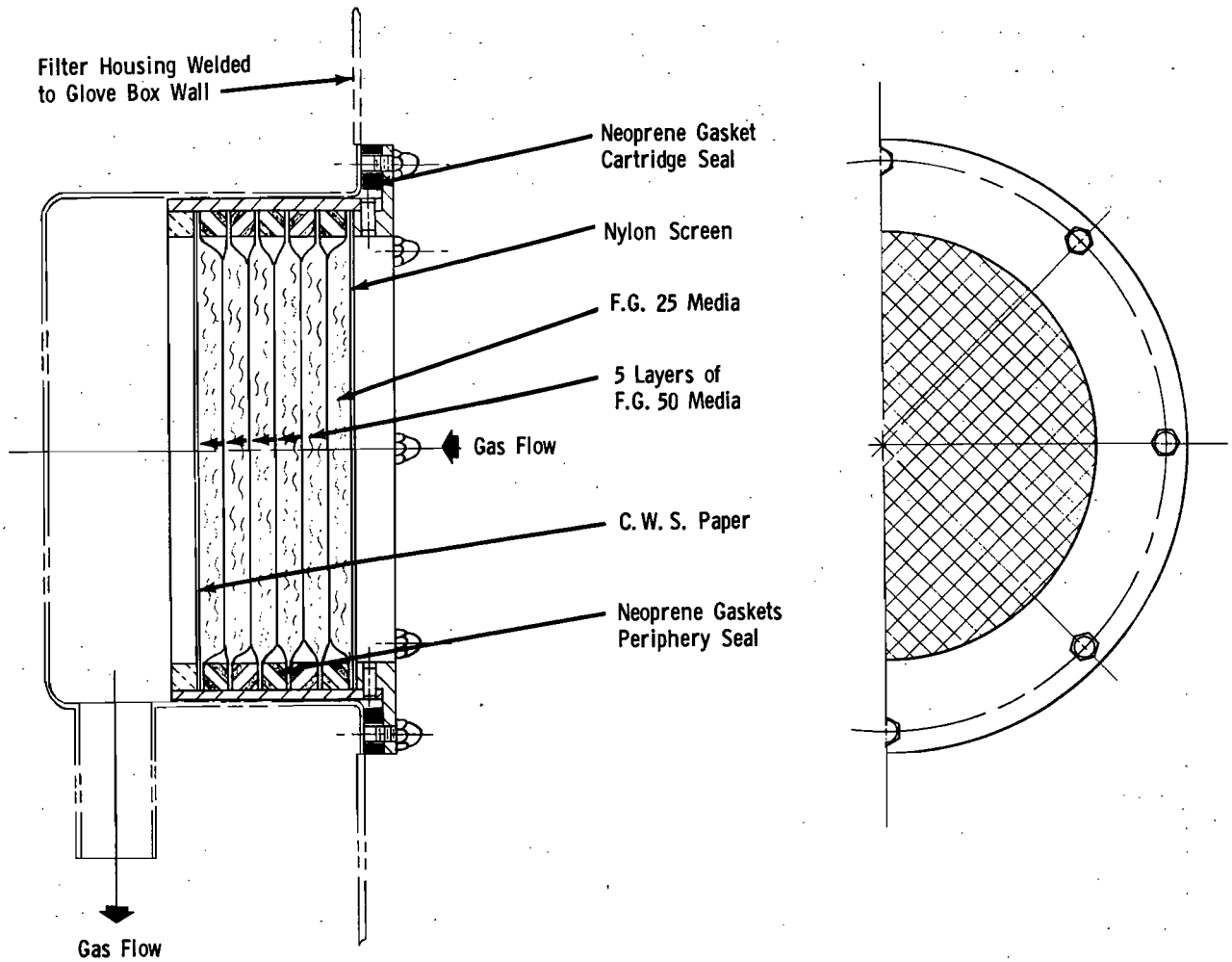

Figure 16

Filter Assembly for the Research Laboratory Helium Circulating System

The emphasis on minimizing dust formation in the ANL Plutonium Metallurgy Laboratory and the slow flow of gas has extended the life of the filters. No plugging of any of the filters has occurred after over 1-1/2 years of service.

For air ventilation of the Fuel Fabrication Facility system, air will be drawn in through AEC fireproof medium filters located in filter housings at the outer end of each glovebox line. These filters will be sealed to the filter housings by means of pressure sensitive vinyl tape and will be covered by a sheet metal protective cover with a throttling damper. The exhaust will be discharged to the common exhaust duct through a 12 in. by 12 in. by 6 in. high-efficiency fireproof filter similar to the inlet filter except that it will be supplied with a closed cell neoprene gasket to seal it to the outer filter housing. After the air passes the hood

exhaust filter, it will be drawn through an exhaust header, through a parallel bank of 24 in. by 24 in. by 12 in. AEC high-efficiency filters, through a fan, and discharged through a 100-foot high stack to the outside of the building. Filtration of the emergency air exhaust system will be through two banks of 24 in. by 24 in. by 12 in. filters in series. The first of these filters will be changed by the vinyl pouch change method.

4. Purity Indicators

Water and oxygen are the impurities of greatest concern in an inert gas-plutonium system. Knowledge of the amounts of these impurities can be used as a check on the efficiency of the purification system and as an indication as to when the purifier requires regeneration. Also, monitoring can be used to indicate when the system has developed a leak.

Automatic monitoring devices are available commercially; these are capable of detecting extremely low levels of both oxygen and water in the inert gas. In the ANL Plutonium Metallurgical Laboratory an oxygen monitor, based on the large positive magnetic susceptibility of oxygen and sensitive to two ppm oxygen, is used to record continually the oxygen content and to switch the system to an emergency exhaust and simultaneously sound an alarm when the oxygen content rises above a predetermined level. Another available device that appears capable of doing this job is based upon reacting the oxygen with an excess of hydrogen and then measuring the amount of moisture that is formed. This device can also be used to measure the hydrogen content of a gas. This instrument loses sensitivity and accuracy if organic vapors are present.

Moisture analyzers, usually based on determining the dewpoint, are also available for continual monitoring. However, they afford a more expensive and less sensitive approach than the oxygen analyzer for plutonium glovebox work. Dewpointers that operate on the principle of measuring the temperature at which moisture deposits on a cold surface are recommended for use with helium. A dewpointer based on the cooling and expansion of a compressed gas has been used to check manually the helium in the ANL Plutonium Metallurgy Laboratory. Experience has indicated that the peculiar thermodynamic characteristics of helium, its negative Joule-Thompson effect and its high heat of compression, make difficult the application of such a method.

IX. TRANSFER TECHNIQUES

Transfers into and especially out of the glovebox system are potential sources of contamination. Where activity levels are low, some systems are designed to permit transfers into the gloveboxes through an air lock; a vacuum lock is used where an inert atmosphere must be protected. In such cases it is best to have a door at the top of the system that opens upward from a horizontal position so that gravity assists in returning any contaminated particles from the door into the system. The swinging open of a vertical door is liable to permit such particles to fall onto the floor. However, anything that is to come out of the system must be regarded as contaminated. Here again, where activity levels are low, a practice has been used of introducing contaminated items into a clean container (cylindrical ice cream cartons are used extensively) in the uncontaminated air lock compartment. The container is sealed closed in place, surveyed for activity, and then removed from the system. Transfer compartments, which can be sealed tight while still attached to the system and then quickly disconnected by a breach lock, have been designed. Such devices are cumbersome and complete freedom from contamination is not always achieved in the region where the compartment attaches to the system.

Where high-intensity alpha emitters are being handled, and especially if they are in the form of metal powders, the air-lock transfer method can be used only where the entire procedure has been thought through with great care and then only for introductions. In the ANL Fuel Fabrication Facility several air locks in the form of tight gloveboxes in series, separated by tight-fitting doors, are used for introductions (Figure 3). Thus the probability is greater of keeping the glovebox that opens to the room free of contamination.

The glove-change technique described in the next section of this report can be extended to provide a safe means of making introductions into the system. The object is placed between the old glove and the new glove and is exposed to the inside of the system when the old glove is removed from the port. Such a method introduces air with the object being transferred, and this must be kept in mind if an inert atmosphere must be protected.

Plastic pouch transfer techniques have permitted transfers into and out of the highly active Plutonium Metallurgy Laboratory boxes without spread of activity. At ANL we have used 20- and 12-mil thick vinyl plastic made into pouches with a neoprene O-ring sealed into the open end. Others have used such plastics as cellophane and polyethylene. The vinyl is relatively easy to seal to itself by standard dielectric sealing methods. For pouches up to 15 inches in diameter, the largest used in the Plutonium Metallurgy Research Laboratory, a 2-kw dielectric sealing power unit has proved adequate. For the Fuel Fabrication Facility, with pouches up to 48 inches in diameter, a 4-1/2-kw dielectric sealing power unit will be used.

The pouches (15 inches and 9-1/2 inches in diameter) are sealed to the Research Laboratory glovebox system by the same clamping system that is described in the next section for gloves. The arrangement of boxes shown in Figure 4 facilitates introductions with a minimum of air transfer so as to protect an inert atmosphere. A vacuum lock is located between the inert atmosphere boxes and an air box. Pouches are attached to the vacuum lock and the air box so that objects introduced through either pouch can be freed of air and moisture by evacuation before they are introduced into the inert atmosphere system.

A gas-tight door is used to cover the pouch port, both to prevent inadvertent damage to the plastic pouch and to minimize diffusion of air and moisture into the inert gas system.

The plastic pouch transfer techniques are illustrated in Figures 17 and 18. Removal of objects from the system is done simply by inserting the object into the end of the pouch, separating it from the system by making three parallel dielectric heat seals, and cutting through the center seal as shown in Figure 17-D. Thus the cut seal is backed up by a full seal on both the stub end of the pouch that remains on the system as well as the plastic bag enclosing the removed item.

When the stub end of the pouch becomes too short for further use, it can be replaced either with a new long pouch by a method similar to the glove change technique or it can be extended as shown in Figure 18.

Note that objects may be transferred into the system during a pouch change or pouch extension. However, the normal method of transferring objects into the system is by the tuck-seal method illustrated in Figure 17. The object is tucked into the end of the pouch (Figure 17-A) and four thicknesses of vinyl film are dielectric heat sealed (Figure 17-B). The completely enclosed object is then transferred into the system, where the tucked-in enclosure is cut open exposing the object to the contaminated system without disturbing the four-thickness seal (Figure 17-C).

The above-described transfer methods will also be used in the Fuel Fabrication Facility. A modification is the 48-inch diameter transfer port which has been designed into the bottom of a glovebox with provisions to facilitate removing large heavy objects from this system. The extended pouch in this case is completely housed by a ventilated hood to ensure safety during the dielectric sealing operation.

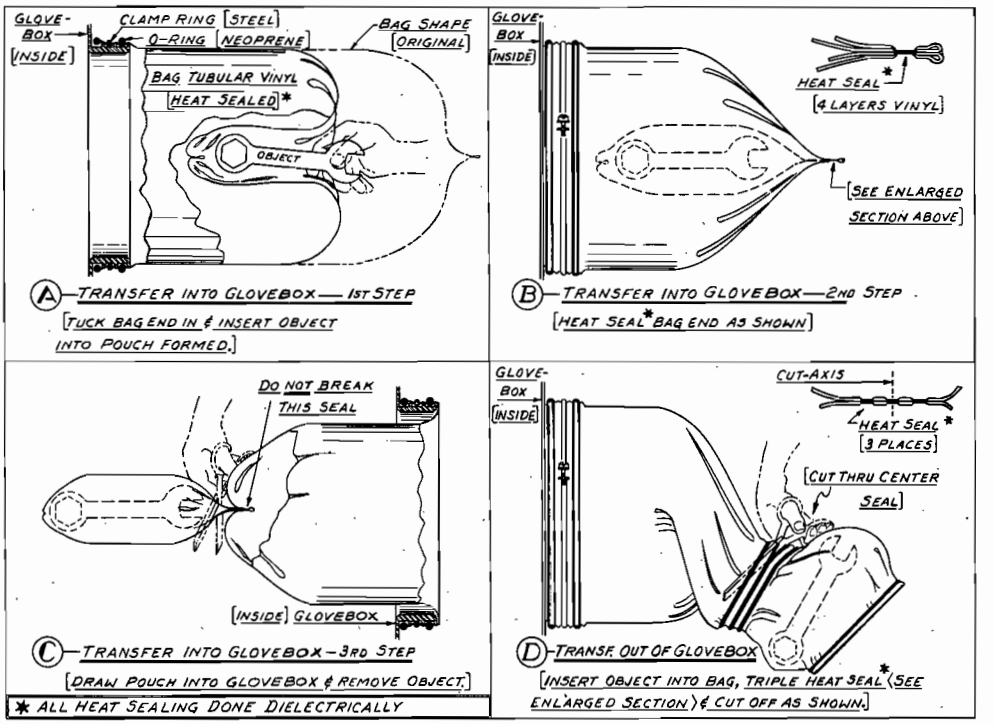

Figure 17

Research Laboratory Transfer Procedure

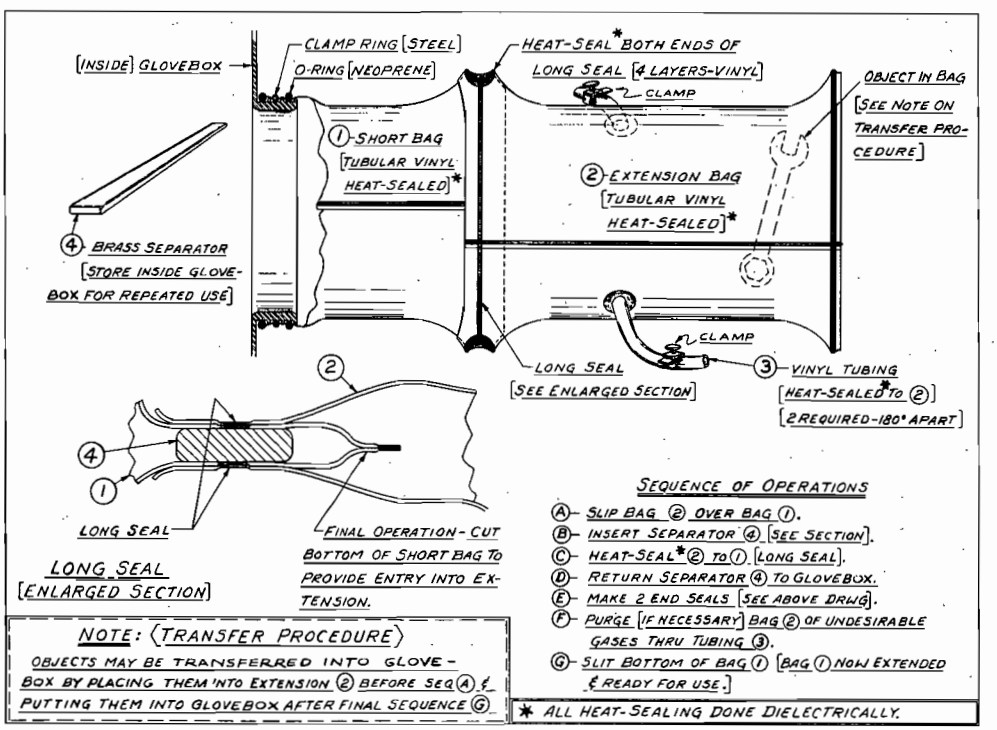

Figure 18

Research Laboratory Pouch Extension Procedure

X. GLOVES FOR GLOVEBOXES

A. The Glove Problem

Gloves are recognized as a vulnerable part of glovebox systems wherein radioactive and/or pyrophoric materials are handled. They are considered by many as the weakest link in such systems. Gloves are membranes through which hand manipulations must be made, yet they must serve to confine contamination much as do the glovebox walls and windows. Fortunately, their flexibility makes possible relatively straightforward glove-change techniques, which will be described later, so that they are replaceable. Unfortunately, the fact that gloves can be expended with relative ease has taken away some of the incentive for developing better, longer-lasting gloves. Instead, the emphasis has been on the improvement of glove-change techniques. However, even the best glove-change technique still presents a potential hazard, especially where radioactive metal powders are handled. Realization of this has helped to bring about a renewed interest in the quality of gloves. The longer gloves last, the less often they must be changed, and, therefore, the less chance of spreading contamination.

In addition to a desire for a better glove for general uses, there is a pressing need for improvement in special properties for certain applications. For example, impermeability to moisture is stressed where inert atmospheres must be protected. Also, special glove properties are desired where gloveboxes are used for purposes other than to contain radioactive materials or to protect an inert atmosphere. Examples of such applications are the preparation and handling of highly poisonous materials, bacteria, and viruses, as well as to provide sterile work areas. Such applications are outside the scope of this paper. However, some of the properties of gloves important to these applications are also desirable in handling radioactive and pyrophoric materials.

B. Standardization

The arm-length gloves that were available to early glovebox workers did not satisfy their requirements. They therefore made independent studies of their requirements, both as regards geometry of gloves and materials used, and had glove forms made to satisfy their individual needs. Unfortunately, there was no attempt to arrive at a mutually satisfactory glove so that almost every laboratory presented a different glove form to the glove manufacturers. The number of gloves required by most laboratories was comparatively small and production facilities were limited. The result was a procurement dilemma. Not until recently have the pleas of glove manufacturers for standardization borne fruit. Recently, glove committees have been formed at many laboratories to provide a centralized source of information for prospective users, to establish requirements and specifications,

and to coordinate procurement of gloves. Users and potential suppliers of these gloves are finally cooperating in an effort to arrive at property and quality specifications which are meaningful to glovebox performance and at the same time practical within the limitations of the manufacturing process. There is now in progress a concentrated effort to develop specifications for an arm-length glove for production or heavy usage where strength, long life, and shielding are desired even at the expense of "feel." A glove that has been suggested for use[20] is made of neoprene (by the milled process) and has an 8-inch I.D. cuff, a 30- to 32-inch length, and a minimum thickness of 0.030 inch.

Once a standard glove is agreed upon and is readily procured from several sources, it will be expedient to design future glovebox installations to use such a glove. However, it may be difficult to alter existing gloveboxes to accommodate the standard glove. For example, our Plutonium Metallurgy Research Laboratory now uses an 8-5/8-inch cuff glove. We have evidence, which will be discussed later, that stretching an 8-inch cuff glove onto our glove port tends to shorten the life of the glove. Therefore, we will continue to use an 8-5/8-inch cuff glove even though the 8-inch cuff glove is adopted as standard. Also, the proposed standard glove is not intended as a universal glove and cannot be expected to have properties satisfactory for every application.

C. Design Considerations

A detailed description of various aspects of glove design, materials and properties specifications, and manufacturing and testing methods will be covered in a forthcoming paper. However, the importance of gloves to those who must work with alpha-active materials justifies a brief review here of these considerations.

In designing gloves for use on gloveboxes, one must consider the location of the glove ports, the geometry of the gloves, and the properties of the glove material. This must be adapted to the work being done as well as to the personnel involved. Although we are aware of several independent design studies by various glovebox users, very little of this information is available in the literature. Two exceptions to this are the reports of the British experience[3] and the University of Rochester experience.[21] The University of Rochester experience, wherein they developed a long, special-purpose neoprene glove, will be cited as typical of the considerations involved. Human engineering studies on a staff of 20 revealed that glove-port location and size was critical to working comfort and safety. In this case 9-inch diameter ports were decided upon with 16- to 18-inch spacing, center to center, and with centers located 54 inches from the floor to permit work from a standing or sitting position.

The University of Rochester investigators decided that, for their operating conditions, the length of the glove should be longer than the longest reach of any operator. They arrived at a length of 39 to 40 inches. A study

of hand proportions revealed that the length was less variable than the width and thickness. The glove hand had to be made to fit the largest hand of anyone who might work in the boxes and the wrist large enough to pass the thickest and widest hand. Fingers were designed shorter than those of the average user by about 1/4 inch to ensure sensitivity. Also, they found it convenient to have a "neutral" or ambidextrous thumb (projecting flat from the side of the palm) to permit use by the right or left hand.

In this study thin flexible gloves were needed to provide a high degree of feel. Pure rubber gloves were unsuitable for the intended application because of absorption of and permeation by radon, poor strength, poor resistance to chemicals, and, in general, short life. The glove now being used by these investigators is a specially compounded low-porosity neoprene which permits the dipping of unusually thin films (as low as 0.006 inch) resulting in extreme sensitivity and flexibility.

The suitability of the above-described glove for its intended application depends upon some features which preclude its use in plutonium metallurgy glovebox work. The negative pressure in the gloveboxes tends to pull the gloves off of the hands, and the greater the glove length the more this is accentuated; 32-inch long gloves are the maximum recommended at ANL, with some applications calling for shorter gloves. Also, greater thicknesses of neoprene are needed for shielding against beta and low-energy gamma radiation; the preferred thickness at ANL and other laboratories is 0.030 inch. The greater thickness results in less flexibility, which discourages the use of the neutral thumb and, in fact, makes desirable curved fingers on a full-fashioned hand.

As was the case in the above-described University of Rochester study, early experience at most laboratories was with natural rubber gloves. These are still used in many applications where the activity level is low and where delicate operations require a sensitive touch. However, such gloves deteriorate very rapidly and must be changed frequently.

At present neoprene is favored by most laboratories where high-intensity alpha-active materials are handled. The properties of neoprene depend upon its composition, which can vary widely, and the method of compounding. Although many of its basic characteristics are only equal to those of rubber, it is far superior to rubber in its stability under almost all service conditions.[22] Therefore, it retains its properties over a greater length of time than do natural rubber compounds. Resistance to deterioration by aging, sunlight, ozone, heat, and resistance to most oils and chemicals are outstanding characteristics of neoprene.

Unlike many of the synthetic rubberlike materials which have desirable properties, neoprene lends itself to the manufacture of arm-length gloves by dipping processes. Both milled and latex processes are used. Milled neoprene can be compounded to develop the properties that appear to be most

desirable for gloves. However, the milled process requires multiple dipping, which results in greater difficulty in controlling uniformity of thickness as well as defects in the dipped film. Gloves made by the latex process have, in general, somewhat poorer properties, and are more permeable to moisture than those made by the milled process, but the film can be controlled within close tolerances (single dip process). At ANL we favor the milled neoprene glove because of its better properties. However, it is only fair to add that there is little agreement amongst glove users, glove suppliers, and manufacturers of the materials from which gloves are made as to what properties are important to glove performance. As is so often the case, the suitability is best determined by actual, or at least simulated, service tests.

Permeability to moisture is a property of glove materials that has received considerable attention by glovebox workers who are concerned with protecting inert or dry atmospheres. Butyl rubber[23] has been found to have a much lower moisture permeability than neoprene and many other synthetic elastomers.[24] In general, most of the properties of butyl rubber are desirable. However, its strength is low, it has a low modulus, and it is subject to cold flow. Unfortunately, a satisfactory method of producing butyl rubber gloves has not been developed.

At present the extent of glove inspection and testing by glove manufacturers as well as by most glovebox workers consists of a visual examination for obvious defects. Air pressure tests under water are sometimes used. As a part of the development of standard gloves much more rigid inspection and testing methods to be provided by the manufacturer are being considered. Material and glove dimensions will be specified carefully. Properties of interest include permeability, tensile strength, elongation at breaking, permanent set, hardness, and resistance to cutting, tearing, and abrasion. Of major concern is the stability of the material as evidenced by the retention of these properties in spite of aging, sunlight, ozone, heat, oils, and chemicals. In addition, manufacturing defects will receive considerable attention. Defects to be looked for include patches, blisters, pin holes, cracks, protuberances, indentations, surface breaks, and embedded foreign particles. A proof voltage and leakage current test, modified after the standard electrical test for rubber insulating gloves contained in ASTM Specification D120-52T, appears capable of detecting these defects.[20]

D. Working with Gloves

Gloves are changed at most installations when they become defective or when contamination is found on the outside of the gloves or glove flanges. However, there is a reluctance to changing a glove unless it is obviously defective or cannot be cleaned. This is due not only to the fact that the number of glove changes should be minimized because the procedure is potentially hazardous, but experience also shows that a sound used glove is a better risk to remain sound than is a new glove. The new glove may have an undetected defect or it may develop one early in its use. It follows that

arbitrary replacement of used gloves for the sake of having new gloves on the boxes is not justified. Also, in general, neoprene gloves that are used continuously last longer than those that are used intermittently or that have not been used for long periods of time; gloves that are used frequently have been known to last as long as four years.

Glove-port design must permit changing gloves while minimizing the chance of releasing contamination to the room. Methods have been devised which permit such changes with varying degrees of success. One such method(3) utilizes a cylindrical glove port and a glove mounted in a circular glove ring with a felt washer. This permits a new glove to be slid into the glove port forcing the glove and glove ring of the old contaminated glove into the box. The users state that this method serves the purpose, especially on large glove boxes, but that it is somewhat cumbersome for small boxes.

Several variations of a double-clamp technique are used in this country to permit changing of gloves without opening the box to the laboratory. Most of these use a flat metal clamp on the outside of the glove port and an expanding flat metal clamp with a soft rubber liner on the inside of the glove port. The consensus of most workers who use such techniques is that contamination may be averted for more than one glove change. However, depending on numerous variables, one of the most important of which is the amount of plutonium-containing dust adjacent to the glove port connection, these workers are convinced that one must expect some contamination to show up after several glove changes. They reason that some of the dust will be worked closer to the outside of the glove port with each glove change until it is exposed to the open room. This transfer of activity by rubbing of contaminated against uncontaminated surfaces occurs in spite of a negative pressure to prevent gas-borne transport. They therefore take special precautions to catch or contain the contamination on every glove change and wear suitable face masks to protect against inhalation.

In the Plutonium Metallurgy Research Laboratory at ANL we use an adaptation of the double-clamp technique, and, in over a year and a half of operation, have yet to experience even a slight count on the outside of glove ports. This glove replacement procedure is described in Figure 19. The glove ring contains three grooves to accommodate the bead of the glove, a metal clamp ring of small circular section, and a tight-fitting neoprene O-ring, as shown in Figure 19-A. The metal clamp ring is made with a dovetail joint and is tightened with a screw connection so as to bear uniformly. This results in a gas-tight seal between the glove and the port. As was mentioned elsewhere, the glove is stretched only enough to assure no folding at this seal. The neoprene O-ring is stretched into position and serves as a temporary seal during the glove change.

In changing a glove, care is first taken to remove all dust from the inside of the glove port by wiping and sometimes by use of a small vacuum cleaner. The metal clamp ring is then removed and the bead of the glove is

folded over the end of the port leaving the tight-fitting O-ring as the seal, as shown in Figure 19-B. Next the rib of the new glove is slipped over the old glove and into the groove adjacent to the box, after which the metal clamp ring is fastened in place to make a gas-tight seal, as shown in Figure 19-C. Finally, the old glove and O-ring are pulled into the box and a new O-ring is put into the outer groove, as shown in Figure 19-D. The old glove and O-ring are disposed of as active waste by the plastic-pouch transfer technique which is described in another section.

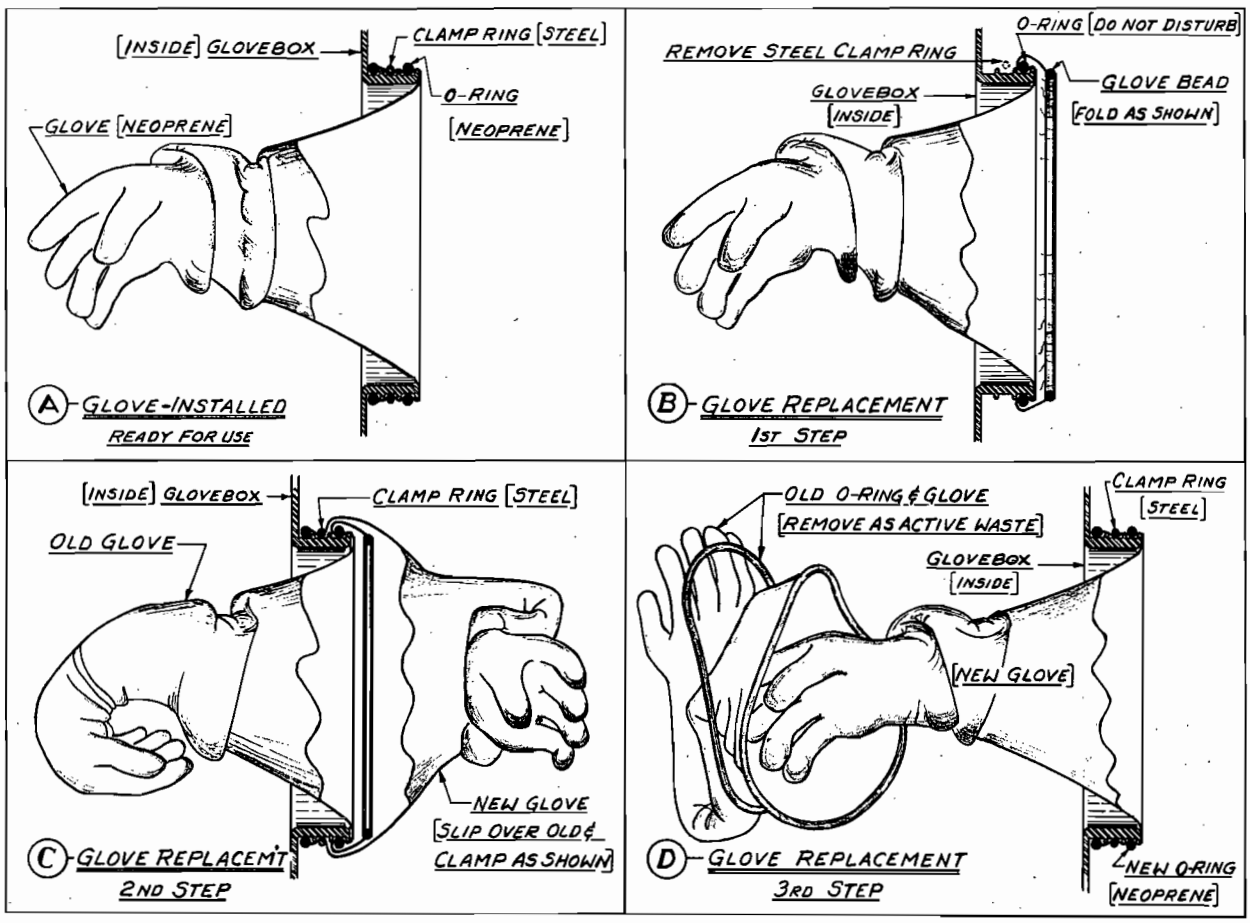

Figure 19

Research Laboratory Glove Replacement Procedure

One feature of the above-described technique which we feel is important to its success is the proper use of grease in the sealing area. We have used a low vapor-pressure grease, such as Apiezon or silicone types, which obviously must not attack the neoprene. A thin coat of grease is applied to both sides of the glove in the sealing area. It helps to obtain a

gas-tight seal with a minimum of pressure from the metal clamp ring and also prevents the formation of friction folds in the neoprene glove during the clamping process. The grease also minimizes friction between the glove and the metal port, permitting sliding without damage in spite of the presence of abrasive particles or a rough metal surface. The use of grease on the neoprene O-ring makes easier the stretching of the tightly fitting ring onto the glove port. We also feel that the presence of grease on both the neoprene gloves and O-ring improves their resistance to ozone attack. Finally, plutonium-bearing dust tends to adhere to grease-covered surfaces, thereby fixing the contamination.

Typical of the glove problems is the one concerning pinholes. Early in our experience, while our glovebox system was still "cold" with respect to alpha activity, we found that minute pinholes developed in a localized ring where the gloves turn the corner of the glove-port flange. These holes were not always detectable with the unaided eye but were easy to find with the aid of a mass spectrometer helium leak detector. These pinhole defects developed in gloves that were used only sparingly and sometimes not at all, so that the cause did not appear to be related to stretching during use. Also, almost all gloves that failed in this manner did so in the first two weeks of use. Otherwise they usually lasted indefinitely. Some leaks appeared to be associated with certain areas on certain glove ports where very small but sharp-edged surface imperfections were found. Also, we found numerous hard foreign particles imbedded in the neoprene. Finally, other glovebox users suggested that the above potential sources of trouble are accentuated by our practice of stretching an 8-inch cuff diameter glove over the 8-7/8-inch maximum diameter of our glove port.

Because of the above experience we changed to an 8-5/8-inch cuff diameter glove to minimize stretch while avoiding wrinkling. We also polished the glove ports to eliminate the last vestige of sharp edges, and we impressed the glove manufacturers with the need for improved quality. As a result, the development of pinholes in gloves has been greatly minimized.

An expanding metal clamp band to seal the glove to the inside of the glove port is used on many glovebox systems, especially where alpha-active metal powders are encountered. It has two purposes. One is to prevent strain at the edge of the glove port flange where the glove reverses its direction. The other purpose of the inner clamp is to permit glove changes without spreading contamination into the room; it serves the same function as the O-ring in the above-described glove-changing technique. Some workers have objected to inner clamp bands on the basis of cost, interference with arm motion, and general nuisance. Nevertheless, it is standard equipment in most installations that handle plutonium. Inner clamp bands cannot be used to make a tight seal against the inside of the glove-port flange if the glove fits without stretching over the outside of the port flange, as is our practice at ANL. The fact that the inside diameter of the flange is smaller than the glove diameter

would lead to folds. A way out of this would be to design a glove which tapers enough at the cuff to have a diameter equal to the inside diameter of the port flange where the inner clamp band seals.

Thin latex surgeons gloves are worn as a secondary protection against contamination in the event of a cut or torn neoprene glove and as an aid in monitoring for glove failures. It is standard practice at ANL to monitor the surgeons gloves for alpha activity every time the hands are removed from the neoprene gloves. This prevents spread of contamination from the hands to objects in the room as well as to other gloves.

As has been mentioned previously, glovebox systems for handling plutonium are kept under negative pressure. The degree of negative pressure is limited to about - 1-1/2 inches of water because of the tendency for the gloves to stand away from the hands, thereby interfering with the sense of touch. This problem is aggravated where long gloves are needed to permit a long reach. In this case one tends to "lose" the glove when working with hands close to the glove ports. A helpful technique where this situation exists is to mount the glove rotated in the glove port. Then on insertion of the hand one must twist the glove back to the natural position which causes it to tighten around the wrist and helps to keep it on the hand in spite of the negative pressure. This problem has also been solved by the use of accordion bellows sleeve gloves and the use of springs or rubber bands to retract the gloves. The greater surface of such gloves is objectionable in that there is a greater possibility of defects and a greater tendency for dust to collect in the folds.

The vulnerability of gloves to damage makes it necessary to take precautions wherever potential hazards exist. Where sharp objects must be handled, auxiliary holding devices often can protect the gloves. Also, there are commercially available soft leather protector gloves designed to fit over the rubber gloves for protection against sharp objects. Asbestos mittens, though clumsy, have been worn over the gloves to protect them against hot objects. Where movement of the gloves while they are not being used might bring them into contact with hot or sharp objects, they must be clamped in a safe position. Clamping arrangements are especially important in glovebox systems wherein less than atmospheric pressure is maintained within the boxes. Under such conditions gloves tend to be sucked into the boxes and fluctuations in pressure tend to make the gloves "breathe." A standard practice to protect gloves while not in use is to pull them out of the box and to tie them together. This practice precludes the use of external glove port covers. Internal glove port covers lend themselves to such a practice.[25]

Perspiration is objectionable where inert atmospheres are used because of the increased diffusion of moisture through the gloves. Perspiration on the arms and hands which results from the use of gloves for extended periods can be uncomfortable and irritating to the skin. This has been an unsolved problem for many years in the electrical industry where linemen use similar gloves for handling energized wires. Cotton inner gloves have

been tried, but these become sodden in a short while. Several companies manufacture preparations which reduce the ability of the hands to perspire, but in some cases more serious skin irritations result from such use than if they had not been used at all. Ventilated gloves have been developed,[25] but they are impractical for most general work because they are cumbersome and expensive.

XI. THE HANDLING OF GAMMA RADIOACTIVE MATERIALS

A. Low Alpha Emitters

When substantial quantities of gamma-radioactive material must be handled, heavy shielding or great distances must be placed between the material and the operating personnel. The techniques for carrying out experiments and operations under these conditions are considerably different from those for handling materials emitting only alpha particles. In this section some of the existing facilities for handling materials which emit gamma and beta rays but relatively few alpha particles will be described. Also, some proposed methods for handling large quantities of alpha and gamma radioactive materials will be described.

It is probably clear to the reader that it is considerably more difficult to handle the combination of alpha and gamma radioactive materials than to handle either one of them separately. At the present time, operations involving these materials are generally limited to production operations and a few laboratory experiments. Some advanced planning for handling this type of material will be discussed briefly at the end of the paper.

At present, there are many facilities throughout the country for handling radioactive materials which may emit large amounts of beta and gamma radiation but little or no alpha radiation.[26-32] Most fission products and irradiated structural materials contain very little or no alpha emitters. Under these conditions, the tightness of the enclosure can be relaxed, but the walls must be quite thick. Wall thicknesses usually range from a few inches of steel to three or four feet of concrete. Once the level of gamma radiation reaches the point where rubber gloves can no longer be used, the operation then must be performed by remotely controlled devices.

Facilities for handling moderately small amounts of radioactive material - for instance, 1/10th to 10 curies of gamma-radioactive material - are often in the form of junior caves which may be three to five feet long and two to three feet in depth and height. Figure 20 is a photograph of a junior cave which is equipped with a large viewing window and a pair of master-slave manipulators. Since radioactive contamination is still a serious problem even though alpha emitters are not present, the cave is

kept under negative pressure at all times. This is accomplished by providing an exhaust fan connected to the junior cave through a high-efficiency filter. The door of this cave may be moved to one side about one foot or it may be moved completely away from the enclosure for setting up or removing apparatus. A few access ports are provided for inserting samples, making temporary utility connections, etc.

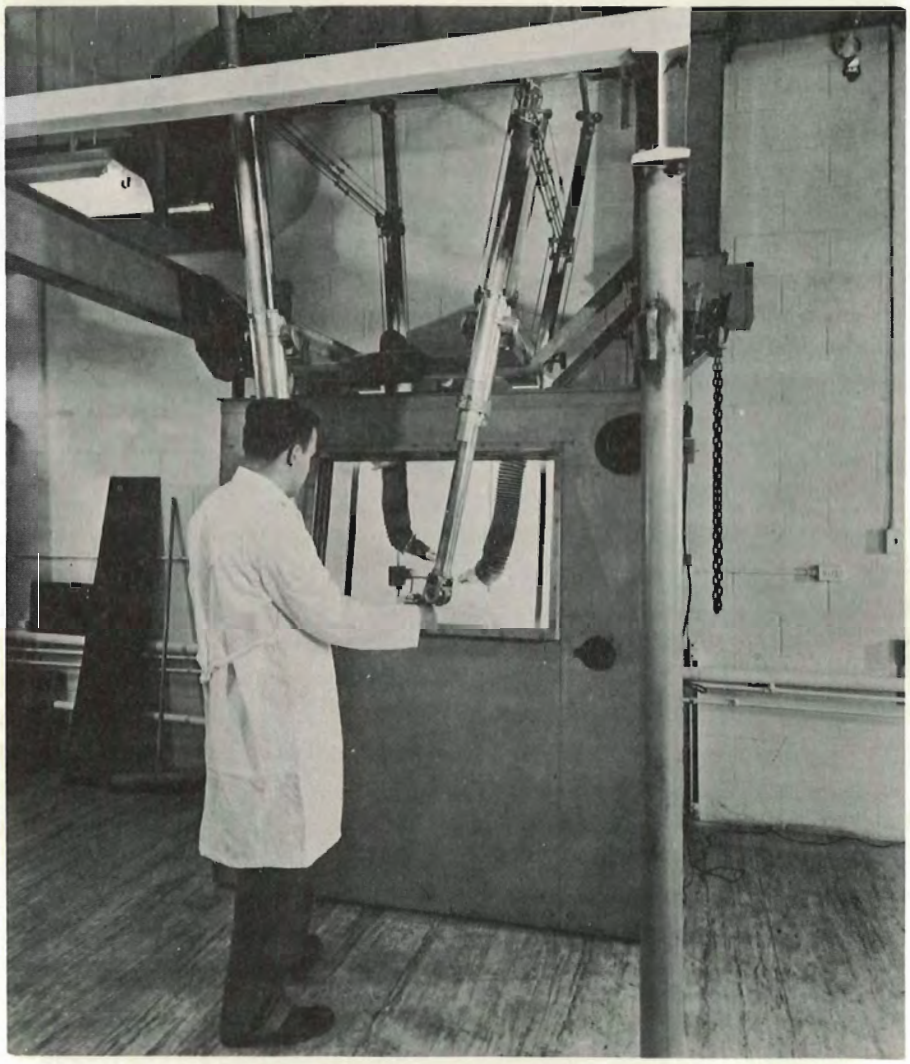

Figure 20

Junior Cave with Lead Glass Window and Master Slave Manipulator

Since the operator cannot carry out handling and manipulation directly with his hands, general purpose manipulators have been developed to work through or around the shielding walls. The master-slave type of

manipulator is commonly used in research hot laboratory facilities. These manipulators have master and slave arms which are linked together so that the slave arm duplicates the motions of the master arm. The mechanical friction and inertia is kept low so that forces reacting on the slave arm or tongs are reflected back to the master handle. One of these manipulators can be operated easily with one hand and generally two such manipulators are provided for each cave or cell in a cave. Figure 21 illustrates the Model 7 manipulator which is well-suited for use in junior caves. It is similar to but somewhat refined over the manipulators shown in Figure 20. For instance, the entire slave arm may be booted to keep the manipulator from becoming contaminated and to protect it from chemical corrosion (Figure 22). Remotely replaceable tongs are attached to the manipulator wrist joint over the boot.

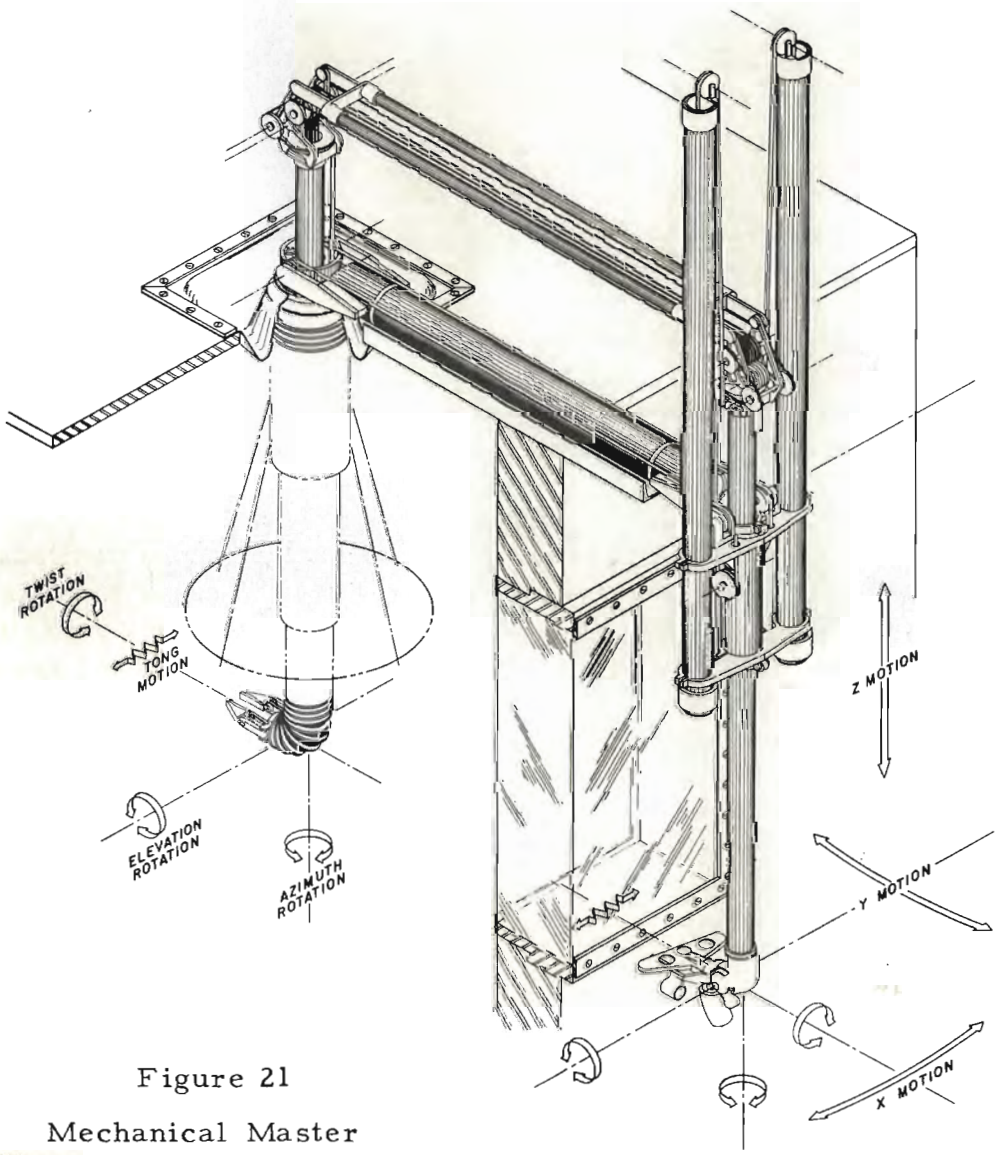

Figure 21

Mechanical Master
Slave Manipulator Model 7

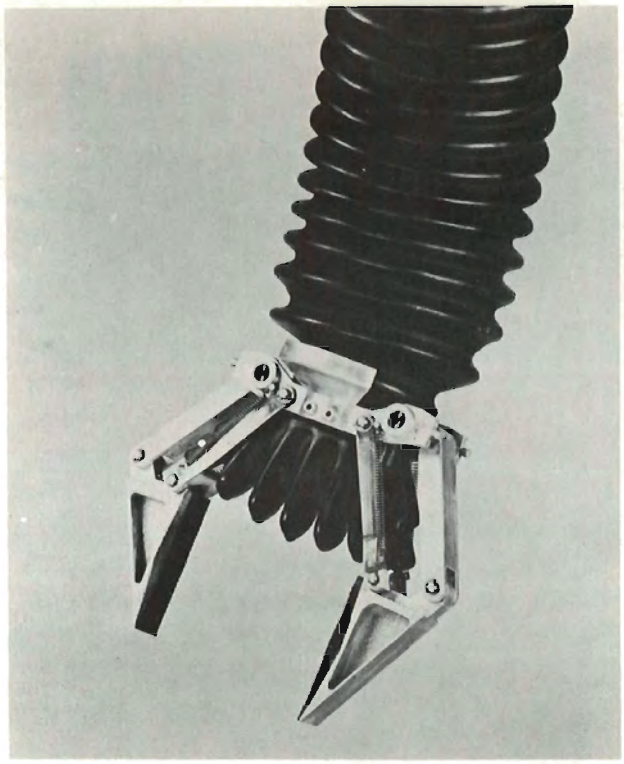

Figure 22

Rubber-Booted Slave Arm with Replaceable Tongs

When the level of activity is increased to 100 or 1000 curies (1 Mev gamma), it is generally necessary to place a substantial shielding cover on the cave to reduce backscattered radiation to safe levels. Figure 23 is a photograph of a three-cell, 100-curie metallurgy cave equipped with large zinc bromide-filled windows and Model 8 mechanical master-slave manipulators. The walls of this cave are 24 inches thick and are principally composed of dense concrete held between plates of steel. This cave, like the junior cave, is not tightly sealed and depends upon continuous air exhaust from within to keep the pressure negative in order to maintain a moderately high air velocity through the cracks. Each cell of the cave has a large door at the rear which can be moved directly away from the cave for admitting personnel and equipment. A room about equal in size to the cave is located just behind it to aid in the control of contamination (see Figure 24). Equipment is first moved to this isolation room, inspected with radiation detection instruments, and, if it is contaminated above a permissible level, it is cleaned or suitably contained before it is moved out. At present, the cave is set up to carry out metallographic preparations and examinations. The cell to the left is used for cutting, mounting, and rough polishing of the samples. The middle cell is used for finish polishing and cleaning of the samples. The cell to the right is equipped with a Tukon hardness tester, a remote microscope, a remotely operated Bausch and Lomb Research Metallograph, a binocular microscope and a camera for metallographic examinations.

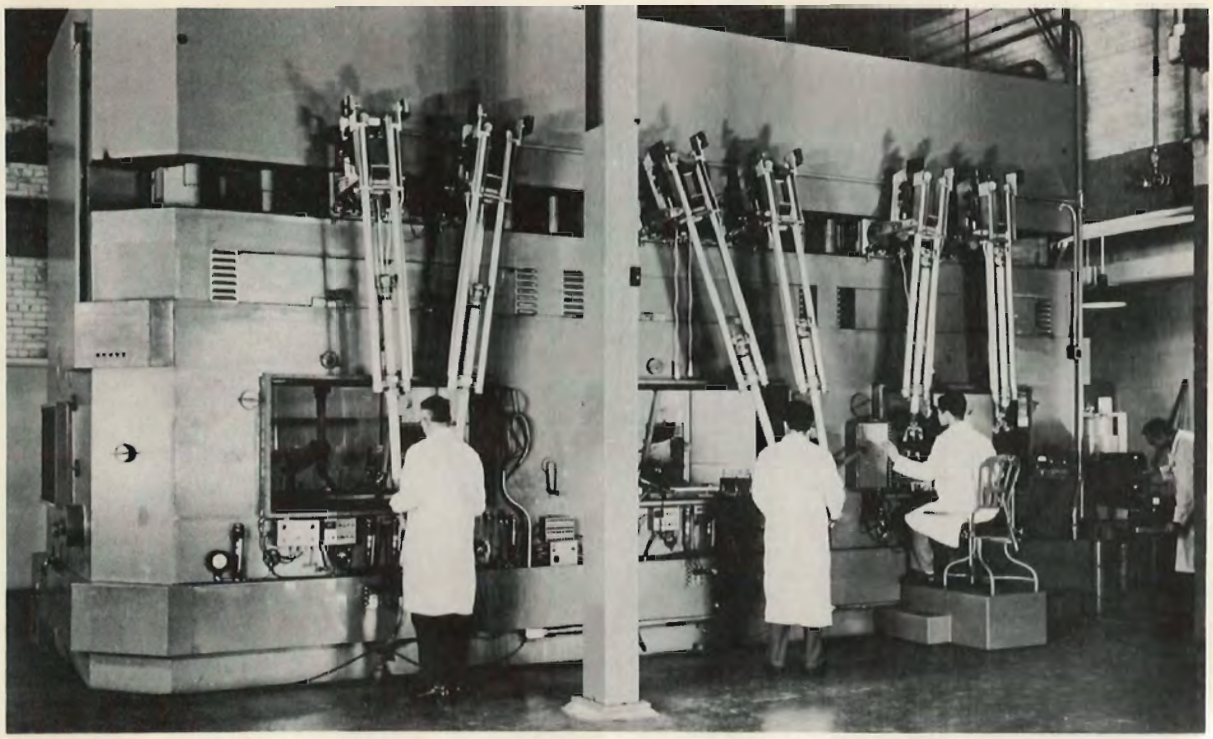

Figure 23

Metallurgy Cave with Zinc Bromide
Windows and Master Slave Manipulators

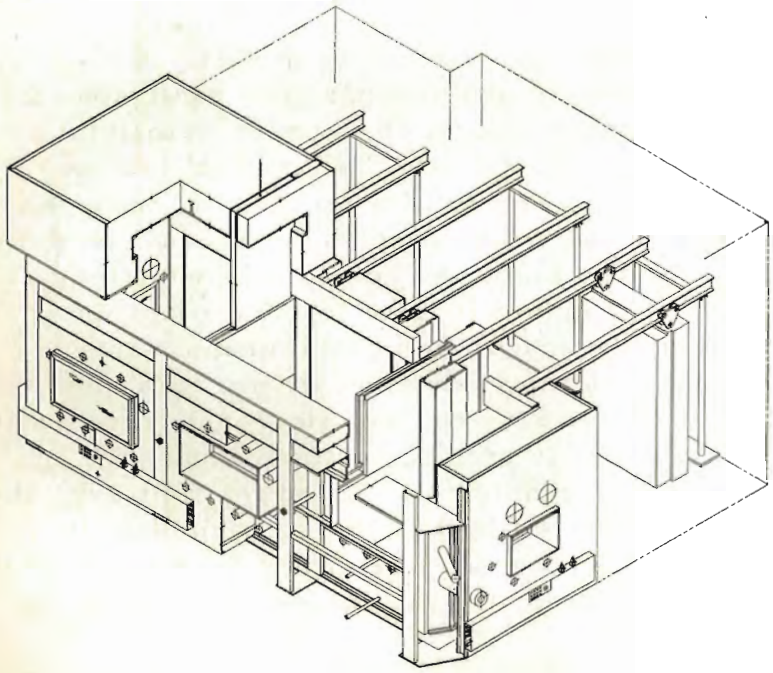

Figure 24

Cutaway View of
Metallurgy Cave

Mechanical master-slave manipulators, Model 8, are used in this cave. They are larger and stronger than the Model 7's and they have a load capacity of about 20 pounds in any direction. Figure 25 shows the manipulator in a typical installation and indicates the positions that the slave arm can move through. An indexing mechanism on the manipulator causes the slave arm to hinge with respect to the master arm so that it may cover a greater volume. It may also be indexed all the way to the horizontal position so that the manipulator can be removed easily. At present, only the lower part of the slave arm is booted to keep it from becoming contaminated.

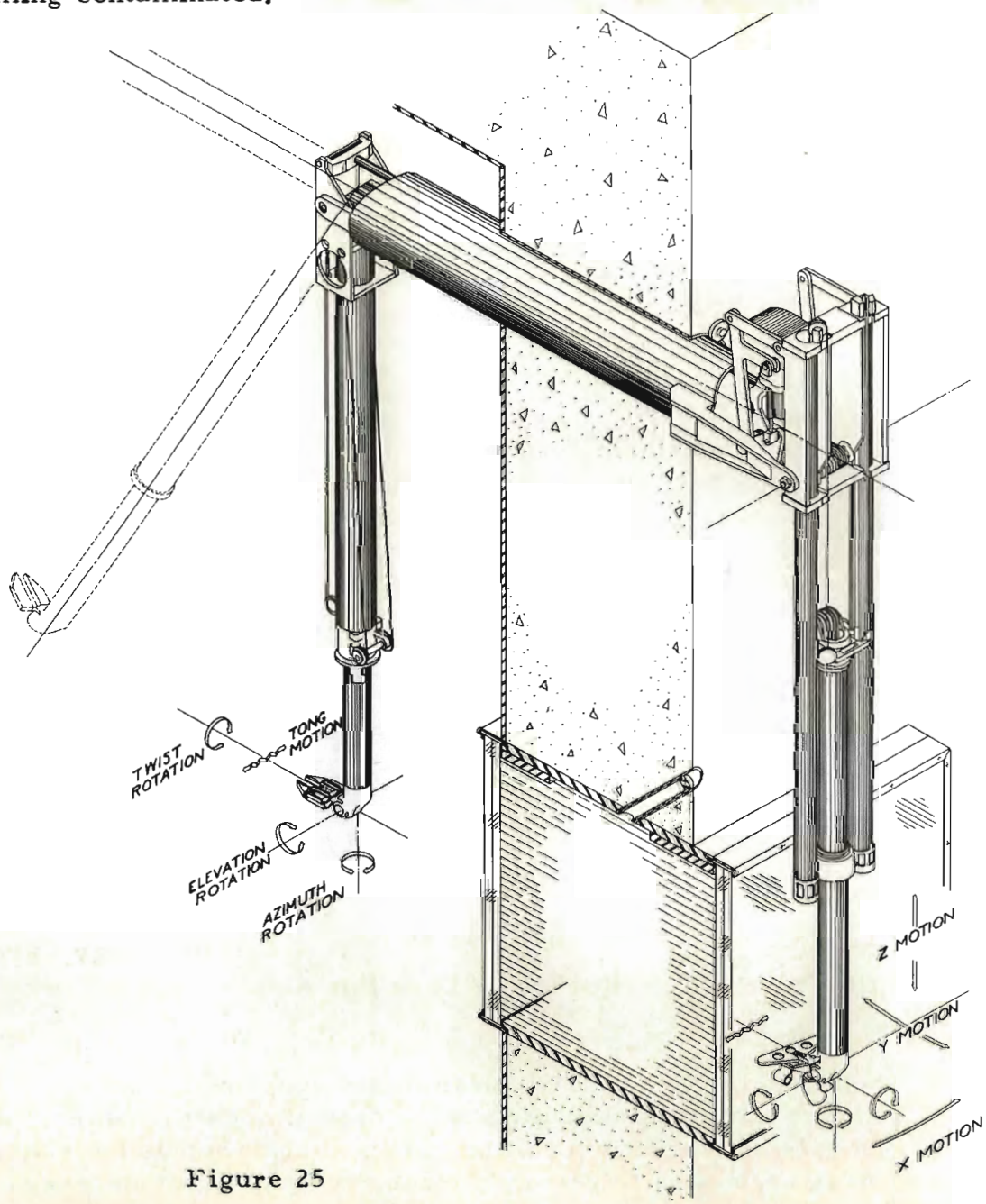

Figure 25

Master Slave Manipulator Model 8

Although irradiated uranium and structural materials can be handled directly in caves similar to those mentioned above, it is often desirable to contain the material by using hoods within the cave. Figure 26 is an illustration of such a hood being used on a vertical milling machine. Such a hood is usually connected to an exhaust system to keep it under negative pressure with respect to the interior of the cave. Sometimes the hood is flooded with inert gas, i.e., when machining pyrophoric materials. Larger hoods are often used within the shielded enclosure and complete machines or test equipment placed within the hood. In this case, the manipulators work through boots supported at the top of the hood.

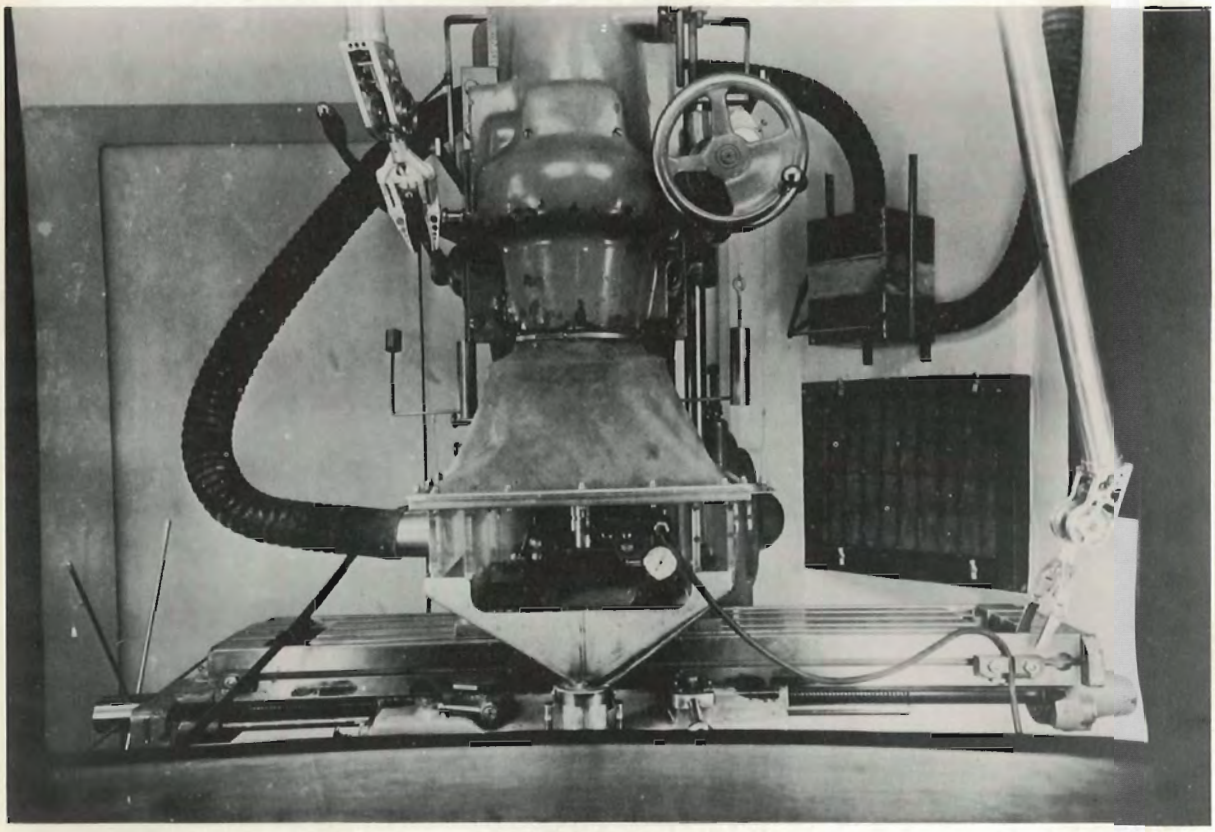

Figure 26

Milling Machine Hooded Inside Cave For Alpha-Gamma Work

The problem of removing contaminated equipment from the cave is one of the large factors contributing to the operating cost of caves. When the experiments are carried out within the cave and when no internal hoods are used, it is necessary to remotely clean the equipment to a level where it is safe for the rear doors to be opened and for personnel to enter the

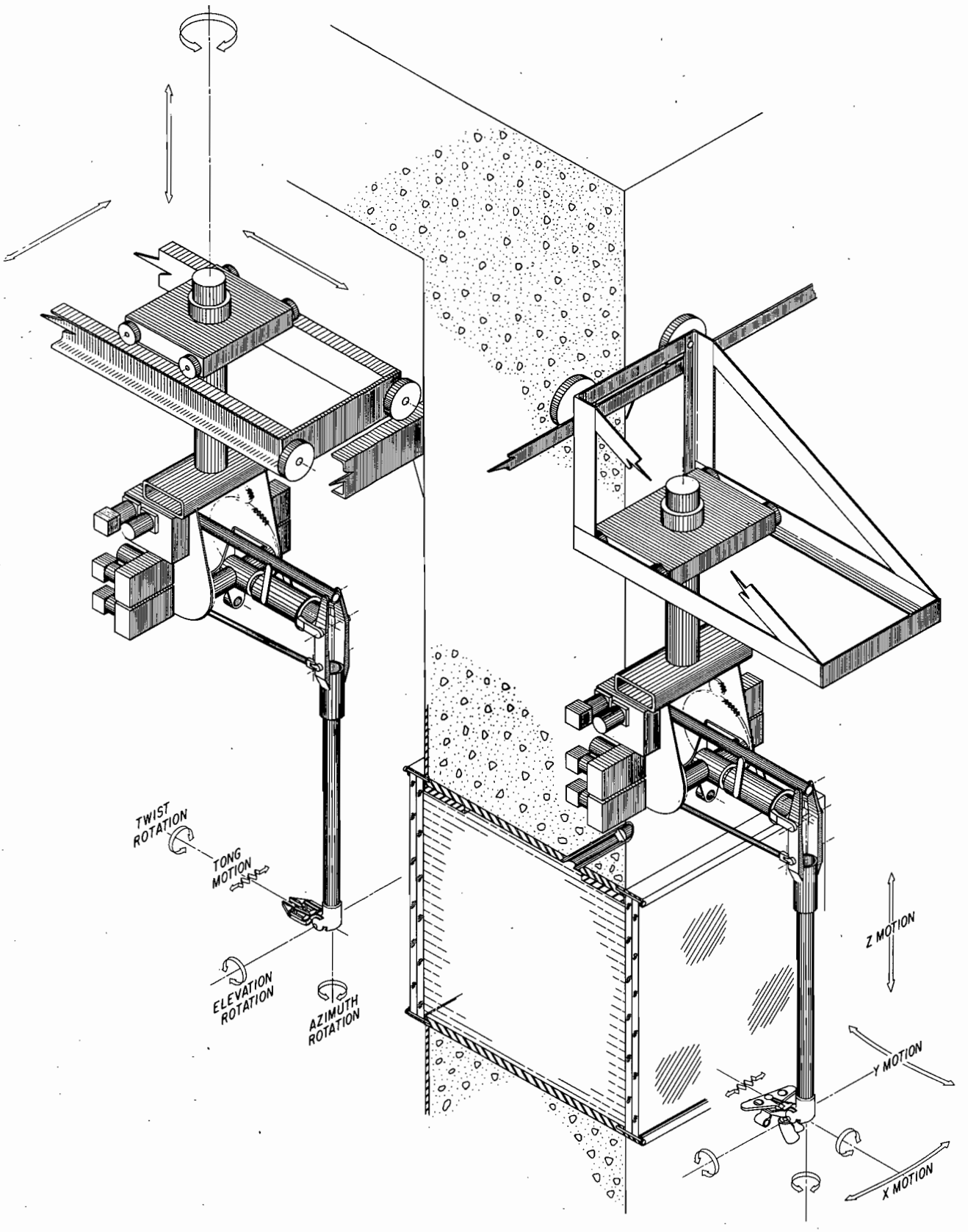

Figure 27

Master Slave Servo-Manipulator Model 2

cave, dismantle it, and move it into the isolation room. At this point the equipment is checked with radiation detection instruments, cleaned, and removed. In some cases it may be wrapped carefully and taken to a decontamination facility which may be located within the same building or in another building. Quite often this procedure can be carried out with personnel wearing simple protective clothing, such as laboratory coats and shoe covers. Sometimes it is necessary for personnel entering the cave to wear sealed plastic suits equipped with an air supply. These suits are washed carefully in a local shower before they are removed. When fairly large hoods, that completely contain the equipment, are used, then the hood with its equipment may be removed to a decontamination cell. This arrangement has been used in some of the laboratories in the United States and England.

B. High Alpha Emitters

A much greater problem has arisen out of some of the tests and operations associated with the power-breeder reactor systems now under development. Some of the plans call for extensive handling and processing of fuel elements which are intensely radioactive, emitting alpha, beta, and gamma rays. Under these conditions it is necessary to carry out the operations behind thick, heavy shielding walls and at the same time to maintain a very tightly enclosed facility in order to contain the highly toxic alpha emitters. In anticipation of this handling problem, development work has been carried out on electrically connected master-slave manipulators. Figure 27 is an illustration of the master-slave servo-manipulator, Model 2, as it will be installed in a research high-level cave. The manipulator has the same basic seven degrees of motion as the mechanically connected master-slave manipulators. Special force-reflecting servomechanisms are used to drive the slave arm and to reflect load forces back to the master arm and handle. The only physical connection required between the master and slave units is a multi-conductor electric cable. The slave arm of the manipulator can therefore operate within an enclosure which is air tight if need be. In order to provide additional volume coverage of the slave arm, it is mounted on a bridge carriage system which is electrically driven to the desired location.

An isometric view of a research cave is illustrated in Figure 28. The cave has two high-level (about 10,000 curies, 1 Mev gamma) cells, A and B, and a low-level cell, C. This cave is also kept under negative pressure by exhausting 1000 cubic feet per minute from each of the cells A and B. The cave itself, however, is much tighter than the caves mentioned previously, i.e., the leaks are held to a minimum. Again, the exhaust air passes through high-efficiency filters before reaching the blowers and exhaust stack. There are numerous access holes in the cave wall, but in this case seals will be inserted in each hole to keep the air leakage very small. Two to four master-slave servo-manipulators, mentioned above, will be

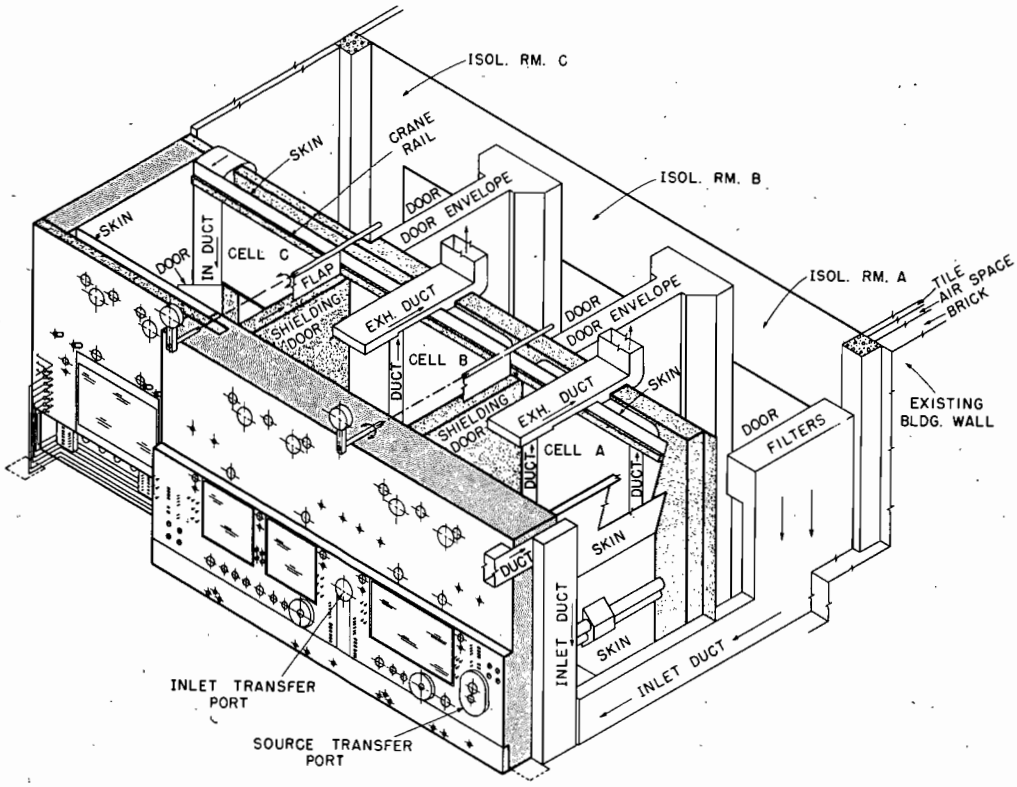

Figure 28

High Level Alpha-Gamma Cave

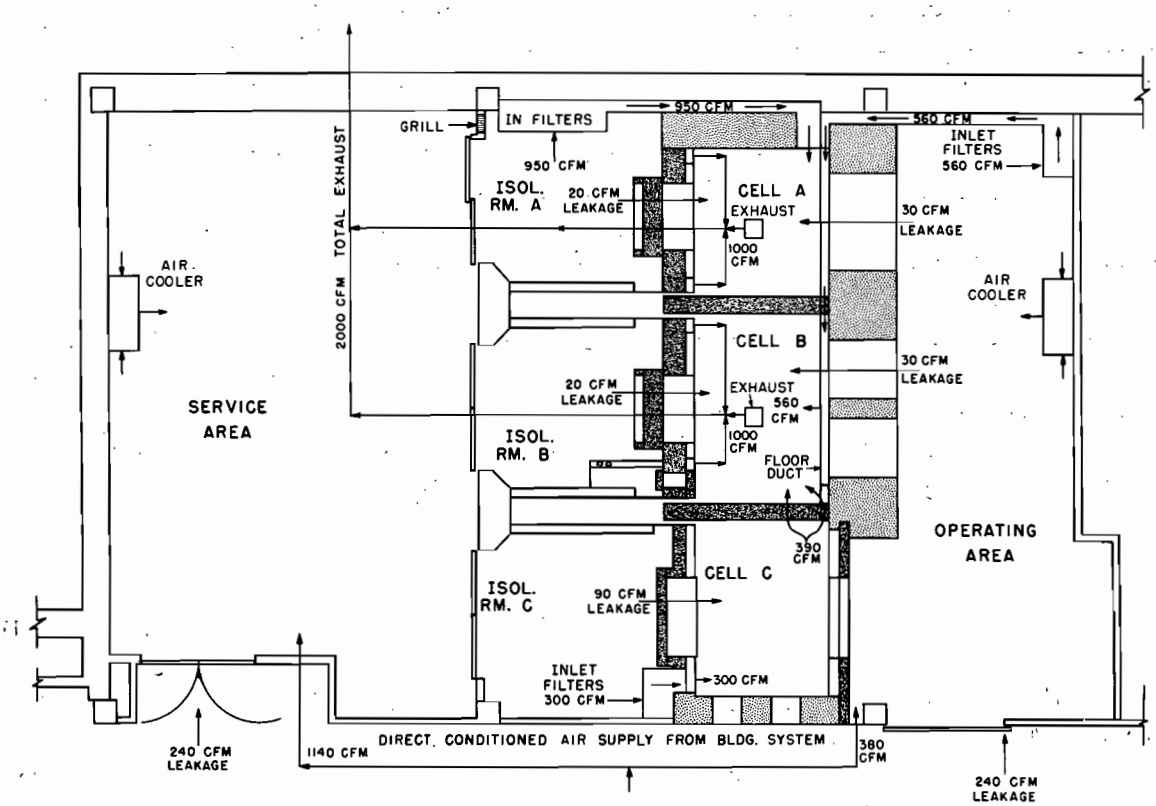

Figure 29

Plan View of High Level Alpha-Gamma Cave

used in the cave and will be so arranged that they can be moved from cell to cell and reach any point within the cells. The low-level cell C (refer to Figure 29) will be used for the entrance of large setups, for the repair of equipment and manipulators, and as an isolation room. Radioactive equipment and materials will be moved out of cells A and B through smaller doors at the rear. These openings and the containers to work in conjunction with them are designed so that there will be a small probability of spreading radioactive material to the isolation rooms. It is planned to operate the cave without personnel entering the cells, except in rare cases, once the equipment is set up and the cells contaminated with both alpha and gamma emitters. The equipment will be put together in sub-assemblies that can be moved into place by the cranes on the manipulator carriages and connected by the manipulators. The reverse process will be used for removing the equipment.

This cave may represent one of the first steps in the design of manipulators, equipment, and a shielded enclosure such that it can be operated without personnel entering the enclosure. Some of the requirements of the manipulators and equipment are stringent under these conditions. For instance, the manipulators mentioned above are designed so that they are moderately easy to repair. In many cases, this is accomplished by making sub-assemblies into unitized packages that can be easily removed and replaced. Further developments on manipulators are aimed at the goal that the manipulators may repair each other as well as most of the equipment within the enclosure. Since there is little hope that the manipulator can be developed to have the dexterity of the unhampered human hand, it will be necessary for the equipment within the enclosure to be set up, maintained, and dismantled within the limitations of the manipulators. This will probably call for extensive redesign of the equipment to be used in such facilities. The problem is by no means insurmountable and its solution undoubtedly will be advanced to a high degree over the next several years.

Certain items or parts of equipment and apparatus may not lend themselves readily to be repaired and maintained by manipulators and in these cases the equipment must be installed so that it can be easily removed from its working location to a low-level cell such as cell C where, after cleaning to reduce the gamma level, certain repairs can be made by using rubber gloves.

ACKNOWLEDGMENTS

The authors wish to thank the many persons both at ANL and at other AEC installations who have made significant contributions to the material covered in this paper. It would be impractical to list them all. However, major contributions toward the design and assembly of the ANL facilities described in this paper were made by E. W. Hoyt and B. J. Koprowski.

REFERENCES

1. Hausner, H. H. and M. C. Kells, "The Role of Powder Metallurgy in the Design of Nuclear Power Reactors," presented at joint session of the Metals Engineering Division, Nuclear Energy Application Committee and the Power Division at the ASME Diamond Jubilee Spring Meeting. Paper No. 55-S-24, April 18-24, 1955.

2. Laboratory Design for Handling Radioactive Materials, NP-3875, Nov. 27 and 28, 1951, sponsored by the American Institute of Architects and The Atomic Energy Commission, May 1952, Technical Information Service, Oak Ridge, Tennessee.

3. Hall, G. R., editor, Symposium on the Handling of Radioactive and Toxic Substances, AERE C/R 958, Ministry of Supply, Harwell, Berks, 1952.

4. Jette, E. R., and A. S. Coffinberry, "Plutonium and Its Alloys," Chapter 1.15, General Properties of Materials, The Reactor Handbook, Vol. 3, Sec. 1, March 1955, AECD-3647.

5. Warde, J. M., and R. M. Richardson, "Waste Disposal - Vital to Atomic Power Development," Mining Engineering, 7, 458 to 461 (1955).

6. Handbooks published by U.S. Department of Commerce, National Bureau of Standards
   Handbook 42 - Safe Handling of Radioactive Isotopes.
   Handbook 48 - Control and Removal of Radioactive Contamination in Laboratories
   Handbook 52 - Maximum Permissible Amounts of Radioisotopes in the Human Body and Maximum Permissible Concentrations in Air and Water.

7. Lecture Notes; Health Physics Training Lectures, 1948-1949. AECU-817, ORNL Health Physics Div., T.I.S., Oak Ridge, Tennessee.

8. Schiavone, P. R., W. R. Kennedy, and T. N. White, Surface Dose Rate from Massive Plutonium, LA-1574, LASL Health and Biology Div. (March 16, 1953)

8a. Taylor, L. S., "The Basis for Standards of Radiation Protection," Lester Honor Lecture, 15th Annual Convention, Society for Non-destructive Testing, October 1955

8b. Threshold Limit Values for 1955. Adopted at 17th Annual Meeting of American Conference of Government Industrial Hygienists, Buffalo, April 24-28, 1955, Archives of Ind. Health, Vol. 11, No. 6, June 1955.

9. Hartman, I., John Nagy, and M. Jacobson, "Explosive Characteristics of Ti, Zr, Th, U, and Their Hydrides," U.S. Bureau of Mines, Report of Investigations 4835 (December 1951).

10. Kopelman, B., and V. B. Compton, "Spontaneous Combustion of Metal Powders," Metal Progress 63, 77-79 (1953).

11. Guthrie, A., and R. K. Wakerling, "Vacuum Equipment and Techniques," McGraw-Hill Book Co. Inc., New York, N. Y. (1949).

12. Mullins, P. V., "Helium Production Process," Chemical Engineering Progress No. 7, 44, 567 (1948).

13. Field, E., and A. S. Wells, Formal Report on the Purification of Helium Gas, Ammonia Dept., E. I. duPont de Nemours and Co., Inc., July 14, 1943.

14. Activated Alumina, Its Properties and Uses, Aluminum Company of America.

15. Jackson, L. C., "Low Temperature Physics," Methuen and Co., Ltd., London, 2nd Ed. (1948).

16. California Research and Development Co., "Design for Piping Systems and Controls for Liquid Nitrogen and Similar Low-Temperature Liquids," MTA-32 (May 1953).

17. Silverman, L., Panel discussion of reference (2).

18. Smith, W. J., and N. F. Surprenant, "Properties of Various Filtering Media for Atmosphere Dust Sampling," presented at meeting of A.S.T.M., Philadelphia, Pa., July 1, 1953, for Arthur D. Little Inc., Cambridge, 42, Mass.

19. Development of High Temperature High Efficiency Air Filter, A. D. Little Co., Inc., NYO-4527, (August 18, 1953).

20. ANL Specification No. PF-L-210, Tentative Specifications for Arm Length Gloves - Milled Neoprene - Production Type (July 12, 1955).

21. Wilson, R. H., Design for a Neoprene Glove for Use in Dry Boxes, UR-265, The University of Rochester Atomic Energy Project. Contract W-7401-eng-49 (July 28, 1953).

22. Sasso, J., Plastics Handbook for Product Engineers, McGraw-Hill Book Co., New York, N. Y. (1946) Chap. 14, p437.

23. Thomas, R. M., E. E. Lightbown, W. J. Sparks, P. K. Frolich, and E. V. Murphree, "Butyl Rubber - a New Hydrocarbon Product," Industrial Engineering Chemistry, 32, 1283 (1940).

24. Rowan, J. H., Moisture Permeability of Glove Materials for Controlled-Atmosphere Boxes, Y-1075, Carbide and Carbon Chemicals Co., Oak Ridge, Tenn. (May 7, 1954).

25. Sherfey, J. M., "Inert Atmosphere Dry Box for Chemical Operations," Industrial and Engineering Chemistry 46, 435-440 (1954).

26. Nucleonics Nov. (1952)

27. Nucleonics Nov. (1954)

28. Hot Laboratories and Equipment Information Meeting, Report ANL-4670, (May 1951) (Classified).

29. Second Information Meeting. Hot Laboratories and Equipment, Report CF-52-10-230 (October, 1952) (Classified).

30. Third Information Meeting on Hot Laboratories, Report BNL-302, (May, 1951) (Classified).

31. Fourth Symposium on Hot Laboratories and Equipment, Report TID-5280, (Unclassified).

32. Chemical Processing and Equipment, released at the Geneva Conference, obtainable U.S. Government Printing Office, (1955) 0-346527.

RECEIVED
JAN 23 1990
LIBRARY
OAK RIDGE NATIONAL
LABORATORY