MARTIN MARIETTA ENERGY SYSTEMS LIBRARIES
3 4456 0059626 4

[redacted]

ORNL-1696
Chemistry-Separation Processes for Plutonium and Uranium

AEC RESEARCH AND DEVELOPMENT REPORT

DECLASSIFIED
CLASSIFICATION CHANGED TO:
BY AUTHORITY OF: AEC, 9-22-58
BY: [illegible]

DEVELOPMENT OF THE EXCER PROCESS: I

I. R. Higgins
J. T. Roberts

CENTRAL RESEARCH LIBRARY
DOCUMENT COLLECTION
LIBRARY LOAN COPY
DO NOT TRANSFER TO ANOTHER PERSON
If you wish someone else to see this document, send in name with document and the library will arrange a loan.

This document contains Confidential Restricted Data relating to Civilian Applications of Atomic Energy.

OAK RIDGE NATIONAL LABORATORY
OPERATED BY
UNION CARBIDE NUCLEAR COMPANY
A Division of Union Carbide and Carbon Corporation
UCC
POST OFFICE BOX P · OAK RIDGE, TENNESSEE

[redacted]

[redacted]

[redacted]

ORNL-1696

Copy No. 4

Contract No. W-7405-eng-26

CHEMICAL TECHNOLOGY DIVISION

Chemical Development Section

DEVELOPMENT OF THE EXCER PROCESS. I

I. R. Higgins
J. T. Roberts

DATE ISSUED:

MAR 1 9 1956

OAK RIDGE NATIONAL LABORATORY
Operated by
UNION CARBIDE NUCLEAR COMPANY
A Division of
UNION CARBIDE AND CARBON CORPORATION
Post Office Box P
Oak Ridge, Tennessee

[redacted]

MARTIN MARIETTA ENERGY SYSTEMS LIBRARIES

3 4456 0059626 4

INTERNAL DISTRIBUTION

1. C. E. Center
2. Biology Library
3. Health Physics Library
4-5. Central Research Library
6. Reactor Experimental Engineering Library
7-13. Laboratory Records Department
14. Laboratory Records, ORNL R.C.
15. A. M. Weinberg
16. L. B. Emlet (K-25)
17. J. P. Murray (Y-12)
18. J. A. Swartout
19. E. H. Taylor
20. E. D. Shipley
21-22. F. L. Culler
23. F. C. VonderLage
24. W. H. Jordan
25. C. P. Keim
26. J. H. Frye, Jr.
27. S. C. Lind
28. A. H. Snell
29. A. Hollaender
30. M. T. Kelley
31. K. Z. Morgan
32. T. A. Lincoln
33. R. S. Livingston
34. A. S. Householder
35. C. S. Harrill
36. C. E. Winters
37. D. W. Cardwell
38. E. M. King
39. W. K. Eister
40. F. R. Bruce
41. D. E. Ferguson
42. H. K. Jackson
43. H. E. Goeller
44. D. D. Cowen
45. R. A. Charpie
46. J. A. Lane
47. M. J. Skinner
48. R. E. Blanco
49. G. E. Boyd
50. W. E. Unger
51. R. R. Dickison
52. I. R. Higgins
53. J. T. Roberts
54. J. E. Moore
55. F. E. Harrington
56-57. ORNL - Y-12 Technical Library, Document Reference Section

EXTERNAL DISTRIBUTION

58. Alco Products, Inc.
59-64. Argonne National Laboratory
65. Armed Forces Special Weapons Project (Sandia)
66. Armed Forces Special Weapons Project, Washington
67-69. Atomic Energy Commission, Washington
70. Bettis Plant (WAPD)
71-73. Brookhaven National Laboratory
74. Bureau of Ships
75. Chicago Patent Group
76. Dow Chemical Company (Rocky Flats)
77-80. duPont Company, Aiken
81. duPont Company, Wilmington
82-89. General Electric Company, Richland
90. Goodyear Atomic Corporation
91. Hanford Operations Office
92. Iowa State College

[redacted]

93-95. Knolls Atomic Power Laboratory
96-97. Los Alamos Scientific Laboratory
98. Massachusetts Institute of Technology (Benedict)
99. Mound Laboratory
100. National Lead Company of Ohio
101. Naval Research Laboratory
102. New York Operations Office
103-104. North American Aviation, Inc.
105. Patent Branch, Washington
106-109. Phillips Petroleum Company (NRTS)
110. Sylvania Electric Products, Inc.
111. Union Carbide Nuclear Company (C-31 Plant)
112-114. Union Carbide Nuclear Company (K-25 Plant)
115-116. University of California Radiation Laboratory, Berkeley
117-118. University of California Radiation Laboratory, Livermore
119. Vitro Engineering Division
120. Division of Research and Development, AEC, ORO
121-435. Technical Information Extension, Oak Ridge

CONTENTS

		Page
0.0	ABSTRACT	1
1.0	SUMMARY	1
2.0	INTRODUCTION	3
3.0	ION-EXCHANGE CONVERSION OF URANYL NITRATE TO URANYL FLUORIDE	4
	3.1 Discussion of Ion-Exchange Step	5
	3.2 Fixed-Bed Studies	6
	3.3 Continuous Contactor Studies	18
4.0	ELECTROLYTIC REDUCTION EXPERIMENTS	18
	4.1 Batch Electrolyses	18
	4.2 Small-Scale Continuous Electrolyses	20
	4.3 Anode Corrosion	22
5.0	LARGE-SCALE EQUIPMENT DEVELOPMENT	23
	5.1 Channel Cells	23
	5.2 Channel-Diaphragm Cell	31
	5.3 Vertical-Cylinder Cell	31
	5.4 Vertical-Plate Cell	31
	5.5 Ion-Exchange Membrane Cell	32
6.0	PRODUCT OF ELECTROLYTIC REDUCTION-PRECIPITATION	33
	6.1 Properties	33
	6.2 Drying	33
	6.3 Dehydration	35
7.0	ACID RECOVERY	35
	7.1 Nitric Acid	35
	7.2 Hydrofluoric Acid	35
8.0	DECONTAMINATION OF URANIUM	38
9.0	MATERIALS OF CONSTRUCTION	41
10.0	COST ESTIMATE	43

ACKNOWLEDGMENT

J. A. McLaren contributed much valuable advice in connection with the electrolytic reduction step. J. H. Goode carried out a large part of the anode corrosion study. F. E. Harrington and J. E. Moore were responsible for a major portion of the economic analysis reported in Sec. 10.0.

[redacted]

0.0 ABSTRACT

A flowsheet, based on laboratory studies, for the Excer process for producing UF_4 from dilute uranyl nitrate solution is given. The uranium is sorbed on hydrogen-form cation-exchange resin and desorbed with aqueous HF. The resulting UO_2F_2 in dilute HF solution is electrolytically reduced, and the precipitated $UF_4 \cdot 3/4H_2O$ is dried and dehydrated.

1.0 SUMMARY

The Excer process (Fig. 1.1) is an aqueous process for converting uranyl nitrate solution to solid UF_4. The uranyl nitrate solution is fed to a cation-exchange resin column where the uranium is sorbed. The nitrate passes through and appears in the effluent as nitric acid. The uranium is eluted with excess 6.4 M hydrofluoric acid, as UO_2F_2 and is then reduced to $UF_4 \cdot 3/4H_2O$ slurry in an electrolytic cell. The wet product cake is centrifuged and finally dried to anhydrous UF_4 at about 400°C. The centrifuge supernatant is concentrated by evaporation and recycled through the electrolytic cell. In laboratory tests gross beta decontamination factors were 6-33, and corrosion products were removed by factors as high as 2600. The current efficiency in the electrolytic cell was approximately 90% for reductions as high as 99%. The equipment must be almost wholly plastic or plastic-lined because of the corrosive action of hydrofluoric acid. Utilization of HF in the process is essentially stoichiometric. A cost estimate indicated that uranium could be converted from uranyl nitrate solution to anhydrous UF_4 for about 25¢ per pound. A suggested modification of the process,[1] in which an improved cell design is used and HF concentration equipment is eliminated, should reduce the cost to 20¢ per pound (Fig. 5.6).

[redacted]

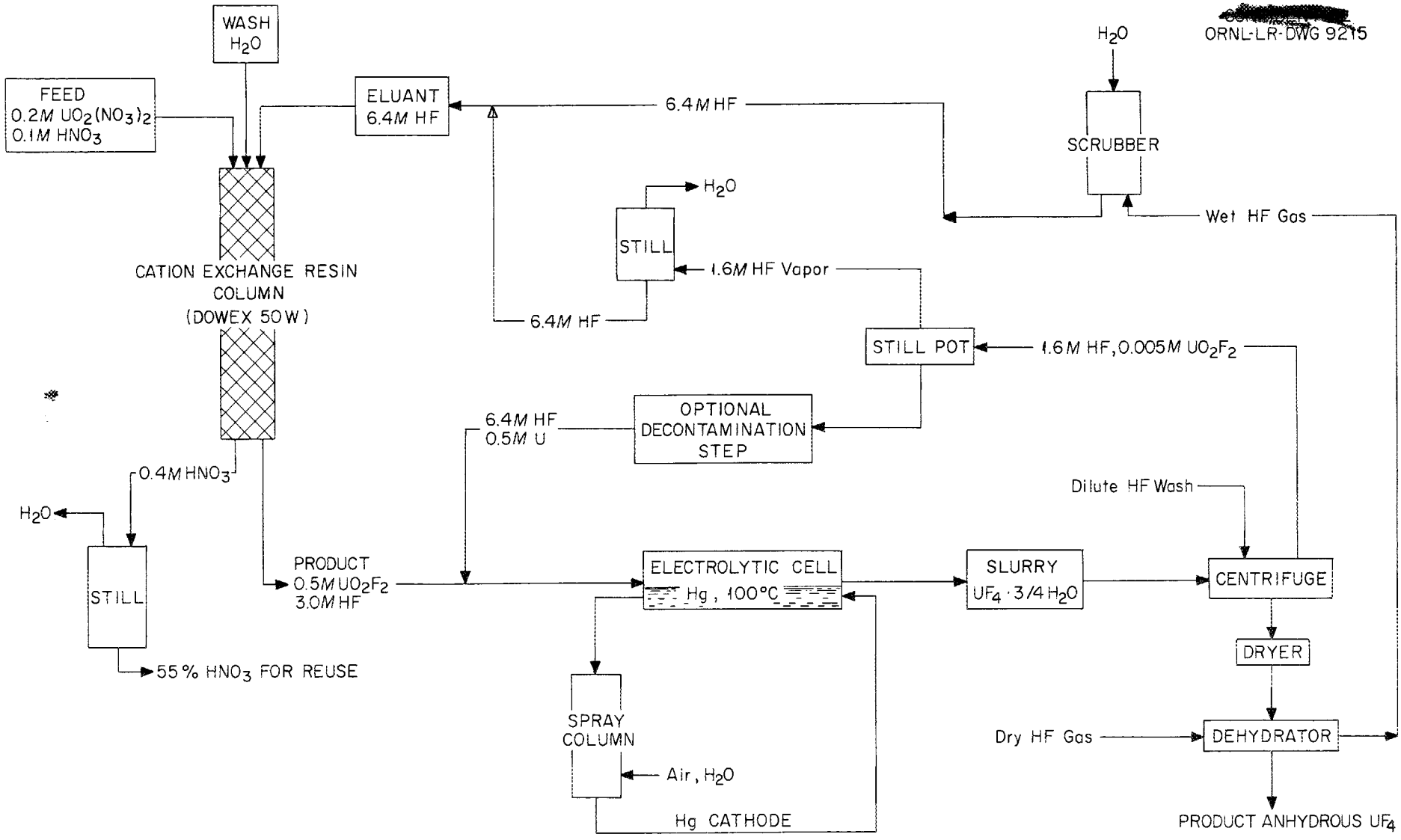

Fig. 1.1. Simplified Excer Process Chemical Flowsheet.

2.0 INTRODUCTION

The Excer process is an economical method of converting dilute uranyl nitrate to uranium tetrafluoride. The product of the solvent extraction columns used for processing both natural and irradiated uranium is approximately 0.2 M $UO_2(NO_3)_2$, which is converted to UF_4 for eventual reduction to uranium metal or fluorination to UF_6. In methods now in use for this conversion, the dilute uranyl nitrate is evaporated and denitrated to UO_3, the solid UO_3 is reduced to UO_2 with excess hydrogen, and the solid UO_2 is hydrofluorinated to UF_4 with excess anhydrous HF at 800°C. The high cost of anhydrous HF and the high maintenance costs for the screw or vibrating-tray reactors used for the last two reactions make the dry process costly. Because of variations in the reactivities of the UO_3 and the UO_2 produced at different times, the full capacities of the reactors cannot always be utilized. Since there is little or no decontamination in the dry conversion process, the uranyl nitrate must be pure enough to meet UF_6 or uranium metal purity specifications before the conversion to fluoride is started.

Experiments reported here on the ion-exchange step were carried out to adapt an earlier reported process[2a] for converting uranyl nitrate to uranyl fluoride to production of a suitable feed for the electrolytic reduction step. Work on the electrolytic reduction step was confined to adapting the batch-process conditions developed by K-25[3] to a continuous process. Large-scale equipment studies were made in an attempt to find a satisfactory plant-scale continuous electrolytic cell, particularly a suitable anode material. A cost estimate was made to determine the economic advantage of the Excer process over other methods now in use.

Other methods that have been proposed for the production of UF_4 include hydration of the UO_3, with reduction and hydrofluorination in the currently used equipment;[4] pelletization, reduction, and hydrofluorination in moving-bed reactors,[5] which are more efficient and therefore require less excess hydrogen and HF; dissolution of the UO_3 in aqueous HF, followed by

electrolytic reduction to $UF_4 \cdot 3/4H_2O$;[3] and metathesis of the UO_2 with aqueous HF to $UF_4 \cdot 3/4H_2O$.[6] In the last two procedures the UF_4 hydrate would have to be dehydrated and dried, but both could be used with aqueous instead of anhydrous HF, with little or no excess required. In another suggested method the uranyl nitrate is concentrated by evaporation and the $UO_2(NO_3)_2 \cdot 6H_2O$ formed is pelletized, mixed with some of the UO_3 which is recycled, and then denitrated, reduced, and hydrofluorinated in moving-bed reactors. The chief advantage of this last method is in the greater efficiency of the moving-bed reactors.

3.0 ION-EXCHANGE CONVERSION OF URANYL NITRATE TO URANYL FLUORIDE

The ion-exchange conditions in the Excer process were designed to give a product suitable for use as feed to the electrolytic reduction step (Sec. 4.0), namely, 0.5 M in UO_2F_2 ($\sim$ 120 g of uranium per liter) with approximately stoichiometric HF. Sorption of uranyl ion from uranyl nitrate solutions on a cation-exchange resin and preparation of concentrated uranyl solutions by eluting the uranium from the resin with aqueous sulfuric, hydrochloric, or hydrofluoric acid or other reagent has been demonstrated in connection with ion-exchange studies, homogeneous reactor fuel processing studies, and U^{233} and U^{235} isolation studies (reference 2, for example). Uranyl fluoride solution for criticality studies was prepared[2a] by passing uranyl nitrate solution, 0.05 M in HNO_3, through a 3-in.-i.d. by 20-in.-high bed of 50-100 mesh hydrogen-form Dowex-50-X8 resin at a flow rate of 1 ml/min/cm^2. The resin was washed with water to remove nitrate ion, and the uranium was eluted with 4 M HF at a flow rate of 0.3 ml/min/cm^2. About 85% of the uranium was recovered as 1.6 M UO_2F_2—0.03 M HF, and the remainder as less concentrated uranyl fluoride in excess HF. The ion-exchange step in the Excer process is basically the same as this, but less stringent requirements on product solution concentration and acidity permit much higher production rates. Both batch and continuous runs were made on a laboratory scale to determine optimum conditions for preparing uranyl fluoride solutions of the desired concentration.

3.1 Discussion of Ion-Exchange Step

Favorable sorption and desorption equilibria are defined as those in which the resin has a greater absorptivity for the component being sorbed than for the one being desorbed; i.e., at equilibrium, the ratio of the component being sorbed to that being desorbed is greater in the sorbent phase than in the solution phase. Under these conditions, the "exchange wave" or "exchange zone" that moves down a fixed bed approaches a steady-state concentration-vs.-length relation of the "constant pattern" type, which is the same as the concentration-vs.-length relation for continuous countercurrent flow of solution and resin under total reflux conditions. This result may be understood by visualizing a long fixed bed of resin which is eluted until the exchange wave has moved down the bed far enough to achieve its steady-state configuration, after which the resin is moved up at the same rate that the exchange wave is moving down so that the wave remains stationary. In a fixed bed all the useful mass transfer takes place within this zone. Above this zone the resin is practically at equilibrium with the influent solution, while below the zone the solution is practically at equilibrium with the resin in its original form, and it is the non-equilibrium conditions in the exchange zone that provide the driving force for mass transfer.

The sorption section of a continuous countercurrent contactor need be only as long as the width of the sorption wave to practically saturate the resin, while a fixed bed must be several times this long to even approach saturation since the resin in the sorption zone is only about half saturated. Similar reasoning shows that continuous countercurrent desorption lowers resin inventory and regenerant consumption, and produces a higher product concentration than a fixed bed. In practice the full theoretical advantage of continuous countercurrent operation is not attained, since the width of the exchange zone represents a certain number of transfer units and the HTU for the continuous contactor is likely to be higher than that for the fixed bed.

In the Excer process the resin requirements are not large, and there is little incentive to increase the uranium concentration or decrease the excess acidity of the product. The advantages of a continuous contactor over a fixed bed are therefore not great. However, it is believed that a resin inventory reduction of at least a factor of 2 could be achieved in continuous equipment that is no more complex than an automatically cycled fixed-bed installation. In a process with more stringent requirements on product concentration and acid consumption, the continuous contactor should show a significant advantage.

3.2 Fixed-Bed Studies

A 2-hr-cycle fixed-bed ion-exchange process (Table 3.1 and Fig. 3.1) was designed to produce 0.5 M UO_2F_2—3 M HF from dilute uranyl nitrate solution. Two automatically cycled fixed beds, staggered by 60 min, are fed continuously and produce product semicontinuously. Channeling in the ion-exchange beds is minimized, at the expense of pressure drop, by operating at as high a length/diameter ratio and linear flow rate as practical. For beds with uniform flow distribution, the length/diameter ratio would not be an important variable, and several pairs of smaller-diameter columns could be used to achieve the same results as the two 5.6-ft-diameter columns.

The uranyl nitrate chosen as feed to the ion-exchange column was 0.2 M $UO_2(NO_3)_2$—0.1 M HNO_3, since in 0.5 M nitrate solution Dowex-50 resin sorbs uranyl ion preferentially to hydrogen ion. This feed is a typical product of a solvent-extraction process such as Purex. The eluant selected was 6.4 M HF, since in fluoride solution of this concentration the resin has a greater sorptive power for hydrogen ion than for uranyl ion, as a result both of a mass action effect of concentration and of the complexing of uranyl ion by fluoride in the solution phase.

Contamination in either the product or by-product stream could be reduced to any desired level by increasing the amount of rinse water, but the additional effluent should be discharged as waste. If a product of higher uranium concentration and/or lower acidity was desired, it could be obtained by using a

Table 3.1 Recommended Fixed-Bed Ion-Exchange Cycle

Column: 5.6 ft diameter, 7 ft high
Resin: Dowex-50-X8
Pressure drop: 12-41 psig throughout cycle
Plant capacity: 20 metric tons of uranium per day
Cycle time: 2 hr

Time (min)	Influent	Effluent
0	4.0 vol of 0.2 M $UO_2(NO_3)_2$ — 0.1 M HNO_3 per vol of resin	By-product, 5.5 vol of 0.4 M HNO_3
60	0.5 vol of H_2O (nitrate rinse)	
72	1.0 vol of 6.4 M HF (eluant)	
82	0.6 vol of eluant (continued)	Product, 1.6 vol of 0.5 M UO_2F_2--3 M HF
120	1.0 vol of H_2O (fluoride rinse)	

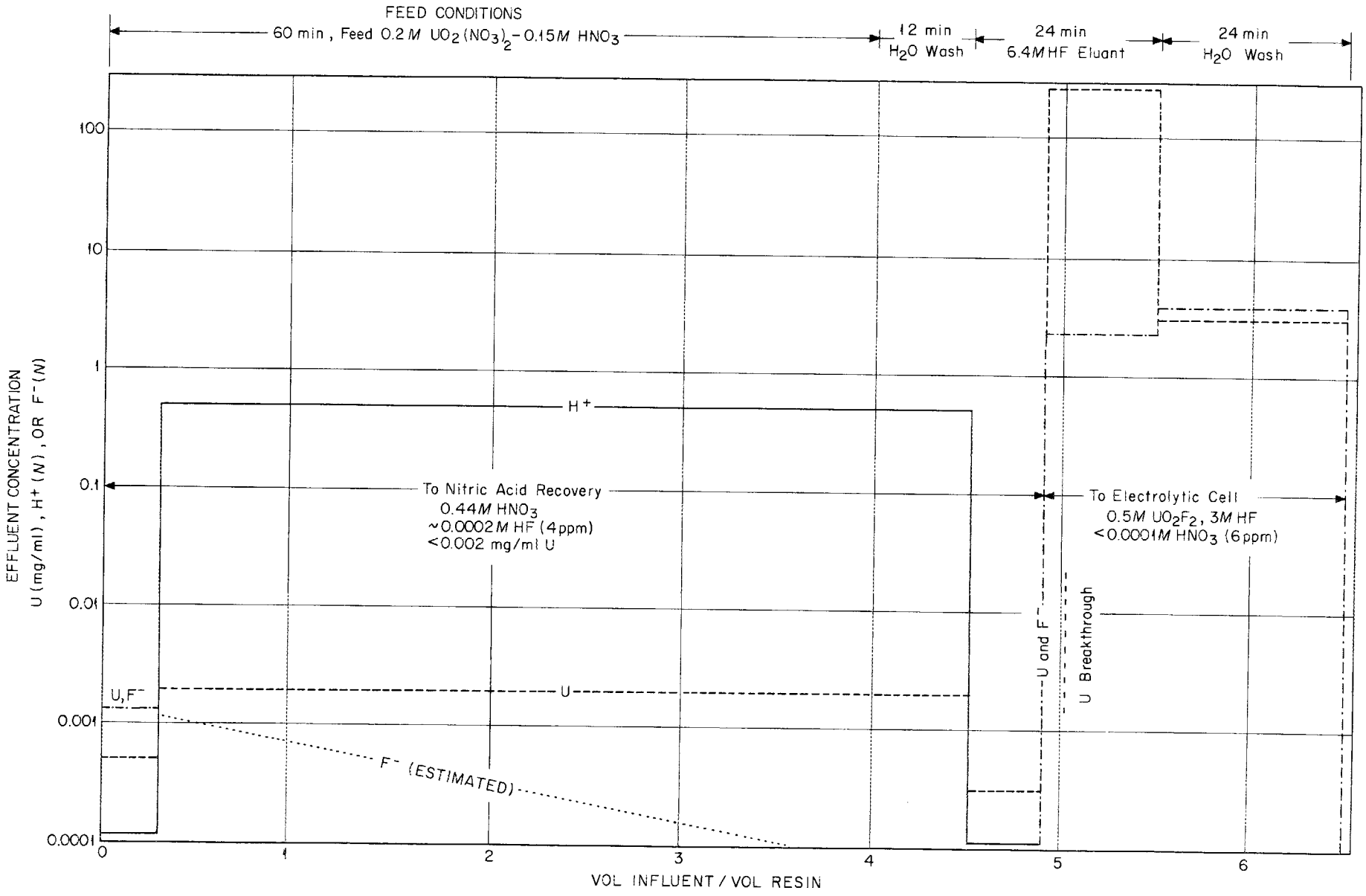

Fig. 3.1. Typical Complete Cycle.

longer cycle, by using a split-elution technic (i.e., by holding the tailings from one cycle for use as the initial eluting agent in the subsequent cycle), or by using a continuous countercurrent ion-exchange contactor.

The capacity of Dowex-50-X8 for uranium is approximately 275 g/liter. Since the feed solution contains 0.1 M HNO_3, the capacity for uranium is reduced to about 250 g/liter by competition from hydrogen ion. The recommended conditions are based on actual loading of 190 g/liter, about 75% of saturation, to ensure negligible uranium losses. Allowance is thus made for the finite height of the exchange zone and feed uranium and acid concentration variations up to 10%. Heavier loadings would be possible with a lower feed rate, which produces a narrower exchange zone by reducing the HTU, or with a feed containing the same ratio of uranium to excess acid but of a lower concentration, in which both the HTU and the mass action competition from hydrogen ion are reduced. The bed could be loaded up to the breakthrough point provided that instrumentation to detect this point and control the flow was used.

In tests on this cycle in smaller-diameter columns, under conditions similar to those recommended, less than 0.01% of the uranium was lost to the by-product dilute nitric acid stream. Less than 10 ppm of fluoride appeared in the by-product and less than 10 ppm of nitrate in the product. To a close approximation, the actual cycle could be represented by joining in series the appropriate portions of the curves for the individual steps.

When the resin was being loaded (Fig. 3.2, Table 3.2), the first 0.3 vol of effluent was essentially pure water. Thereafter the nitric acid concentration rose rapidly to 0.5 M, remaining at that value until about 4.5 vol of effluent had been collected and then falling to the influent value as the uranium broke through. At the recommended value of 4 vol of feed per volume of resin, uranium breakthrough was negligible.

The effluent acid concentration decreased during the washing (Fig. 3.3, Table 3.3). With a lower water flow rate, the lower HTU would result in a steeper concentration drop.

During the elution (Fig. 3.4, Table 3.4), after less than 1 column volume

Table 3.2 Loading of Resin with Uranyl Ion from Acidic Uranyl Nitrate Solution

Resin: Dowex 50W-X8, 50-100 mesh, hydrogen form

Resin bed: 1.5 in. dia, 83 in. high, ~2400 ml

Feed: 0.22 M $UO_2(NO_3)_2$--0.1 M HNO_3, flow rate 166 ml/min (14.6 ml/min/cm^2)

Holdup time: 14.4 min

Pressure drop: ~ 24 psi

Fraction Vol (ml)	Total Vol (ml)	Vol Feed per Vol Resin	Concentration	
			U (mg/ml)	H^+ (M)
9600	9600	4.0	a	a
960	10560	4.4	0.0085	0.51
960	11520	4.8	0.138	0.51
960	12480	5.2	28.7	0.24
960	13440	5.6	50.0	0.13
960	14400	6.0	49.5	0.11
960	15360	6.4	54.5	0.115
960	16320	6.8	52.5	0.12
960	17280	7.2	53.0	0.115
960	18240	7.6	52.5	0.115
960	19200	8.0	54.5	0.115

[a]Not analyzed.

[redacted]
ORNL-LR-DWG 9207

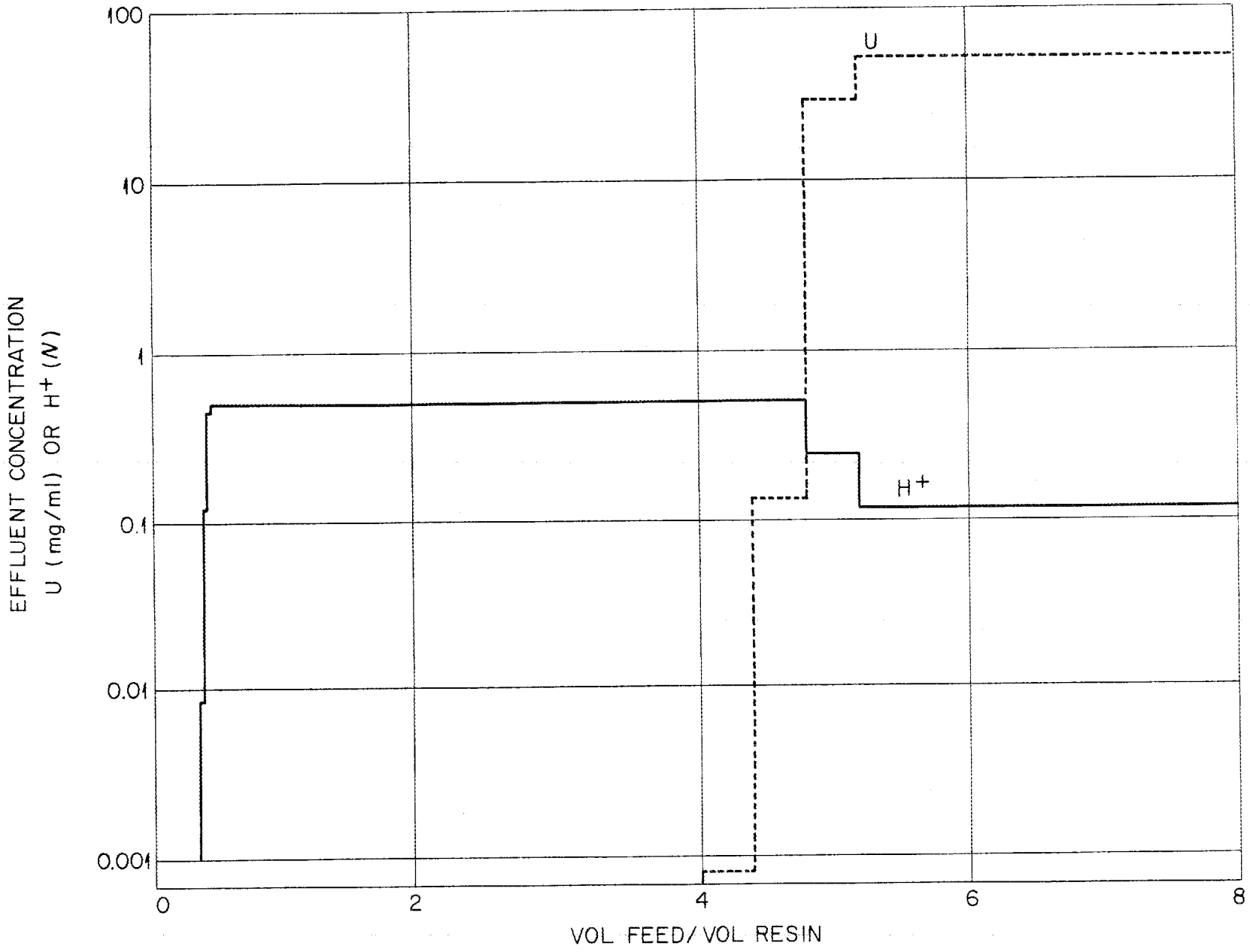

Fig. 3.2. Loading of Resin with Uranyl Ion from Acidic Uranyl Nitrate Solution (See Table 3.2).

Table 3.3 Washing of Nitric Acid from Resin with Water

Resin: Dowex-50W-X8, 50-100 mesh, loaded with UO_2^{++} ion, containing 0.5 M HNO_3 in resin voids

Resin bed: 1.5 in. dia, 83 in. high, ~2400 ml in hydrogen form

Water flow rate: 21 ml/min/cm^2 (1.8 ml/min/cm^2)

Holdup time: 14.4 min

Fraction Vol (ml)	Total Vol (ml)	Vol Wash per Vol Resin	HNO_3 Concentration (M)
800	800	0.333	0.57
160	960	0.400	0.53
160	1120	0.467	0.46
160	1280	0.533	0.13
160	1440	0.600	0.009
160	1600	0.667	0.0046
160	1760	0.733	0.0020
160	1920	0.800	0.0014
160	2080	0.867	0.0013
160	2240	0.933	0.0011
160	2400	1.00	0.0011

[redacted]
ORNL-LR-DWG 9208

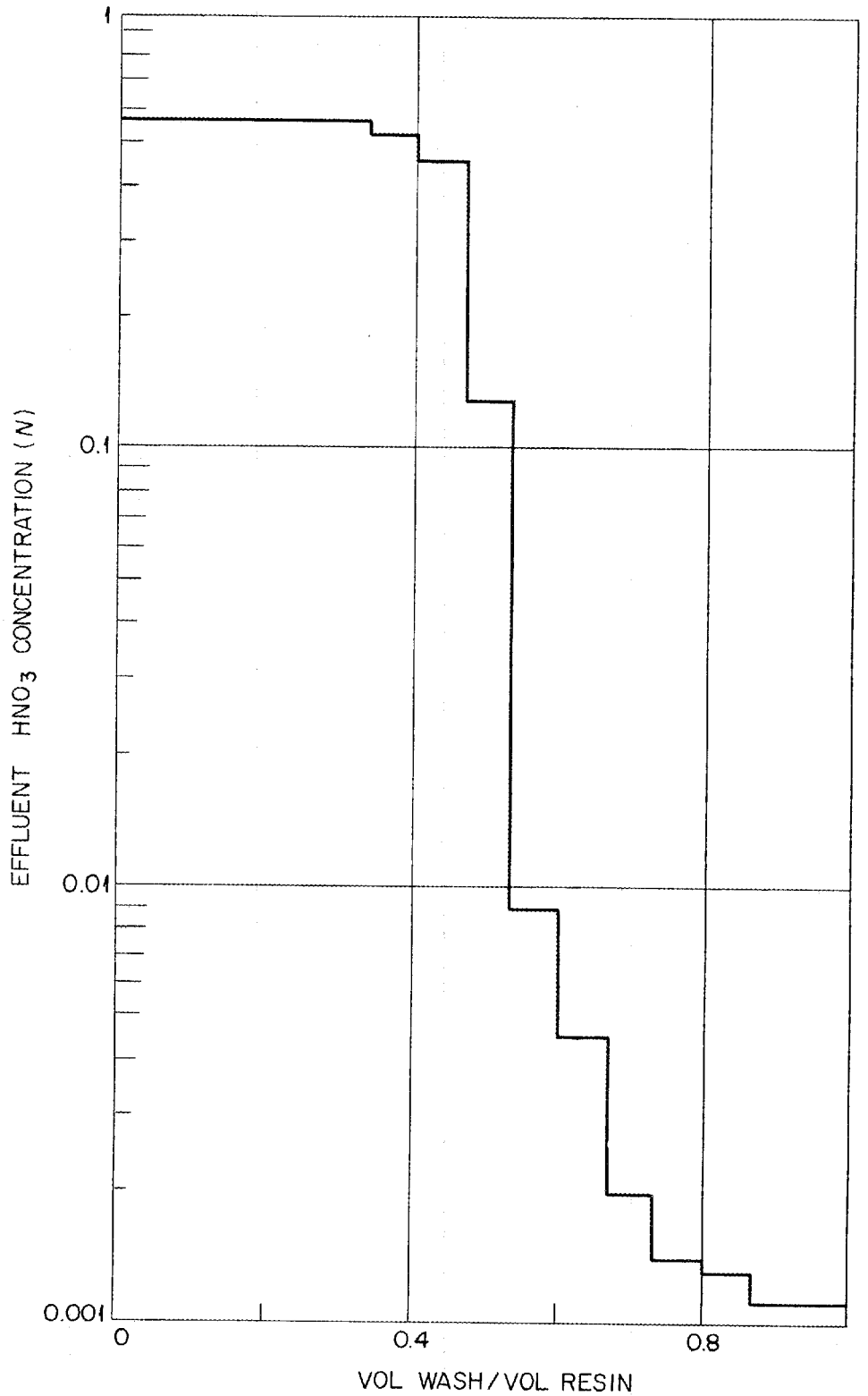

Fig. 3.3. Washing of Nitric Acid from Dowex-50W-X8 Resin with Water (See Table 3.3).

Table 3.4 Elution of Uranyl Ion from Resin with 6 M HF

Resin: Dowex-50W-X8, 50-100 mesh, loaded with UO_2^{++} ion
Resin bed: 1.5 in. dia, 83 in. high, ~2400 ml in hydrogen form
Eluant flow rate: 51 ml/min (4.5 ml/min/cm^2)
Holdup time: 47 min

Fraction Vol (ml)	Total Vol (ml)	Vol Eluant per Vol Resin	Concentration in Fraction	
			U (mg/ml)	H^+ (M)
1200	1200	0.50	Breakthrough	
120	1320	0.55	336	1.20
120	1440	0.60	485	1.70
120	1560	0.65	532	2.05
120	1680	0.70	525	2.40
120	1800	0.75	440	2.70
120	1920	0.80	381	3.25
120	2040	0.85	331	3.50
120	2160	0.90	287	3.70
120	2280	0.95	243	3.95
120	2400	1.00	186	4.35
360	2760	1.15	106	5.00
360	3120	1.30	7.64	5.70
360	3480	1.45	1.46	5.70
360	3840	1.60	0.175	
360	4200	1.75	0.055	
360	4560	1.90	0.0365	
360	4920	2.05	0.020	
360	5280	2.20	0.016	
360	5640	2.35	0.0096	
360	6000	2.50	0.0062	

[redacted]
ORNL-LR-DWG 9209

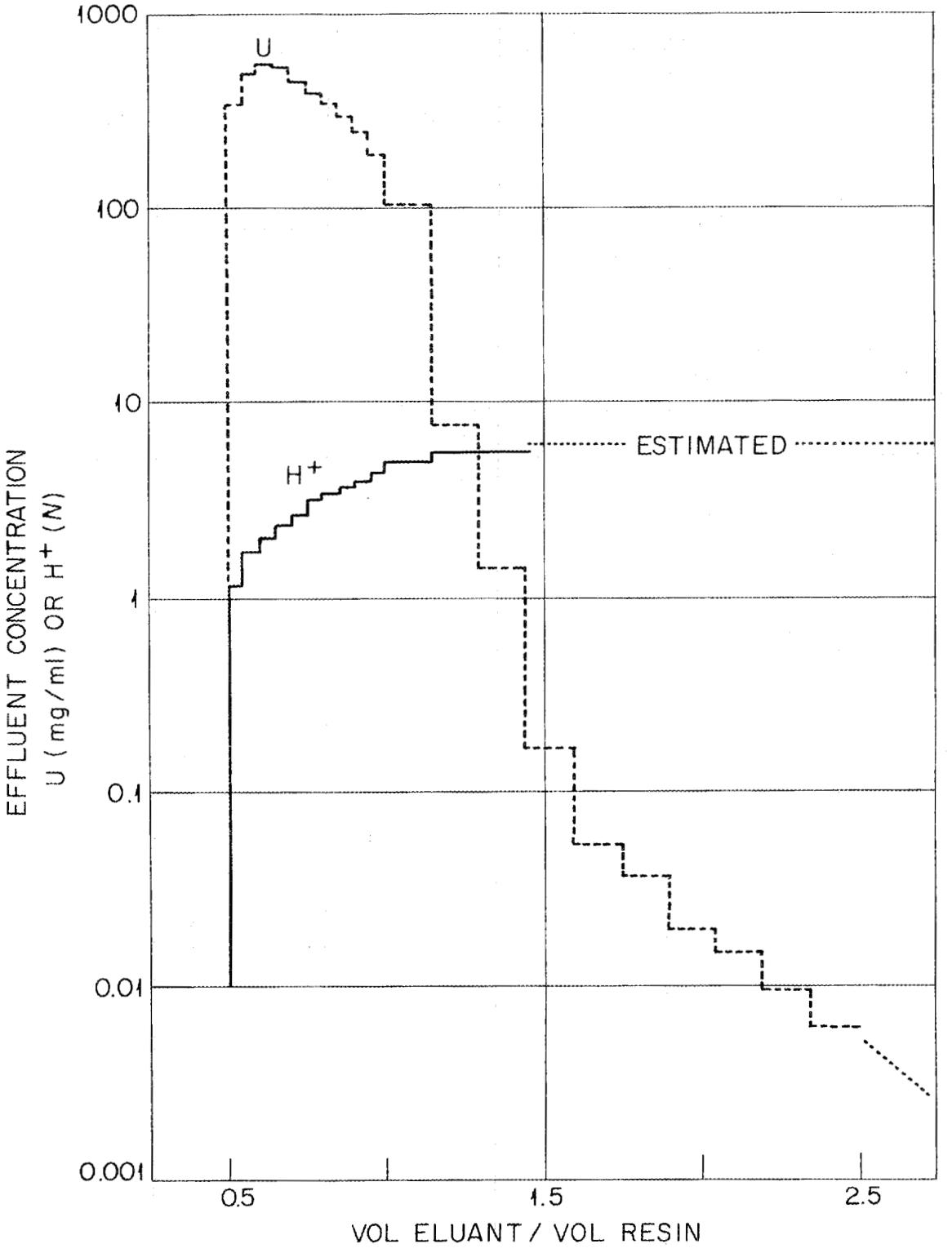

Fig. 3.4. Elution of Uranyl Ion from Resin with 6*M* HF (See Table 3.4).

Table 3.5 Washing of 6 M HF from Resin with Water

Resin: Dowex-50W-X8, 50-100 mesh, hydrogen form

Resin bed: 1.5 in. dia, 83 in. high,
~2400 ml in hydrogen form

Water flow rate: 96 ml/min (8.4 ml/min/cm^2)

Holdup time: 25 min

Fraction Vol (ml)	Total Vol (ml)	Vol Wash per Vol Resin	HF Concentration (M)
360	360	0.15	
360	720	0.30	5.70
360	1080	0.45	5.70
360	1440	0.60	5.00
360	1800	0.75	0.85
360	2160	0.90	0.02
360	2520	1.05	0.01
360	2880	1.20	0.0033
360	3240	1.35	0.0025
360	3600	1.50	0.0020
360	3960	1.65	0.0014
360	4320	1.80	0.0012

[redacted]
ORNL-LR-DWG 9210

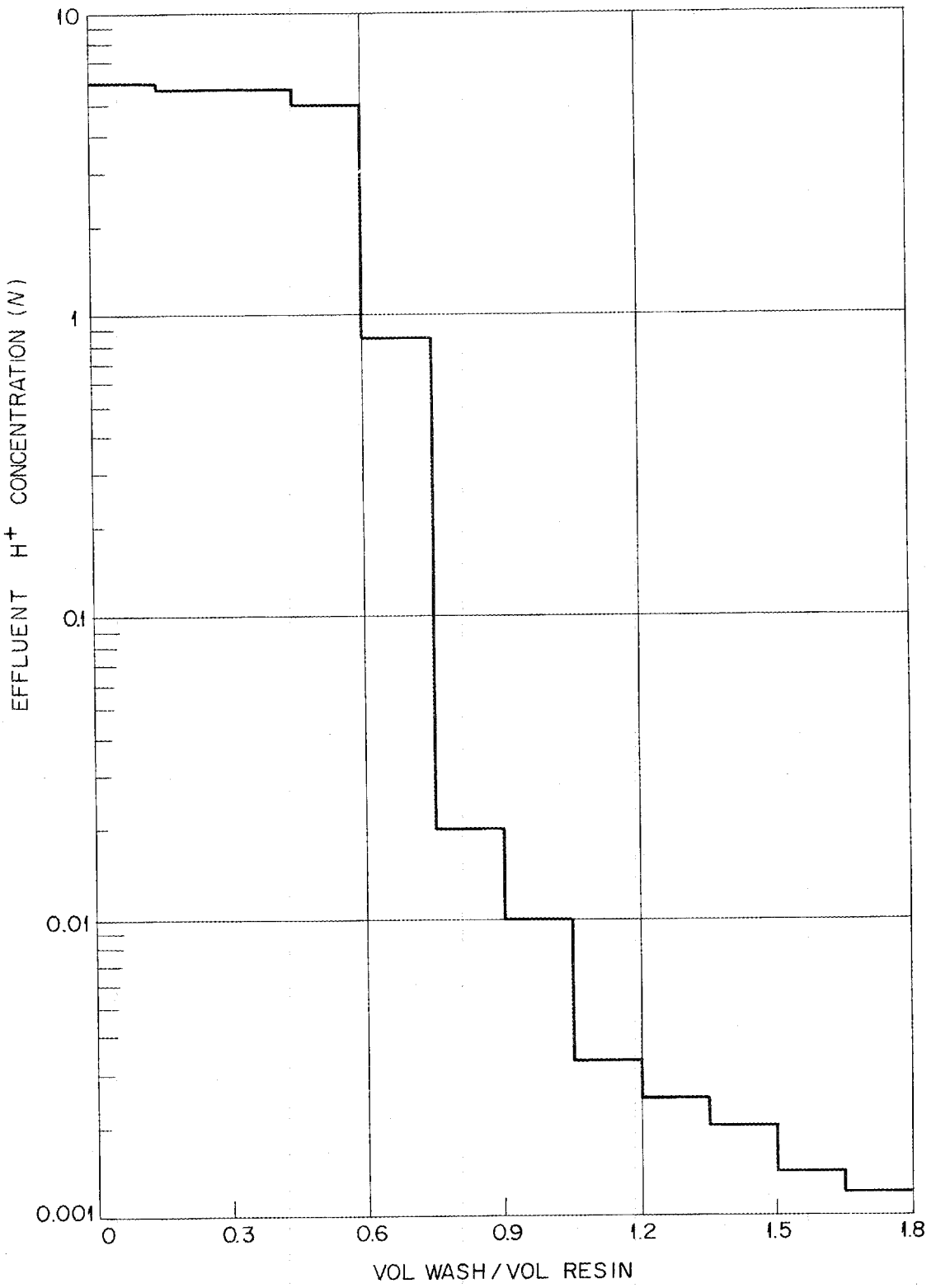

Fig. 3.5. Washing of 6 *M* HF from Resin with Water (See Table 3.5).

of effluent had been collected, the uranium concentration became low enough for the effluent to be discarded.

As the HF was rinsed from the resin, its concentration in the effluent decreased (Fig. 3.5, Table 3.5).

3.3 Continuous Contactor Studies

Uranyl fluoride solution suitable for electrolysis was prepared from uranyl nitrate solution in a 2-in.-diameter by 6-ft-high Higgins continuous ion-exchange contactor[7] at a rate of 50-60 lb of uranium per day (Table 3.6). The feed was about 0.2 M in $UO_2(NO_3)_2$ and 0.01-0.1 in HNO_3. The product had a uranium concentration of 110-140 g/liter (0.9-1.2 M), was about 1.5 M in HF, and contained 50-250 ppm of nitrate ion. The nitrate content would have been lower with a longer nitrate rinse section. The by-product, 0.4-0.5M HNO_3, contained 2-10 ppm of fluoride ion. Predetermined constant flow rates were used for solutions and resin, except for a few runs in which a conductivity probe in the sorption section controlled the resin flow rate by controlling the cycle timer.

4.0 ELECTROLYTIC REDUCTION EXPERIMENTS

The cell used in electrolytic reduction should precipitate the uranium nearly completely in order to minimize uranium recycle. Current efficiency should be high in order to minimize the investment in d-c power supply equipment. Power efficiency need not be so high since voltage is less critical than amperage in determining d-c power supply costs.

As a result of previous work in this field (see appendix for summary of K-25 work) and a few scouting experiments, the optimum feed to the electrolytic cell was considered to be 0.5 M in uranium. The hydrofluoric acid concentration was set as near stoichiometric as possible in order to minimize HF recycle. A few small-scale batch electrolyses were carried out to obtain basic data for a single stage, and small-scale continuous electrolyses were made to determine the stage efficiency.

4.1 Batch Electrolyses

In small-scale batch electrolyses the current efficiency was 87-93%, de-

Table 3.6 Continuous Ion-Exchange Conversion of $UO_2(NO_3)_2$ to UO_2F_2 in a Higgins Contactor

Contactor: 2-in. dia

Sorption section: 1.5 ft

Feed wash section: 6 in.

Elution section: 2 ft

Eluant wash section: 2 ft

Feed: 0.2 M $UO_2(NO_3)_2$--0.058 M HNO_3

Resin: Dowex-50 W-X8, 50-100 mesh, ~4 liters

Eluant: 6.6 M HF

Resin flow rate: 100 ml/min

Run Time (min)	Flow Rate (ml/min)				Product		0.4 M HNO_3 Waste	
	Feed	Feed Wash	Eluant	Eluant Wash	U (g/liter)	H^+ (M)	U (g/liter)	Fluoride (ppm)
60	360	50	50	97	129.0	1.4	0.012	10.0
85	360	50	48	90	129.0	1.6	0.00095	3.56
115	360	50	50	100	90.4	2.0	0.00072	2.25
145	400	50	50	100	129.0	1.3	0.00058	3.56
175	400	50	50	100	115.0	1.6	0.00165	3.56

pending on the conditions, and 99.0-99.5% of the uranium was precipitated (Table 4.1).

The runs were made in covered 400- or 600-ml Fluorothene A or Bakelite beakers. The cathodes were a pool of mercury, 0.5-1 in. deep, in the bottom of the beakers, and the anodes were 16-gage platinum wire coiled into a spiral. A plastic-coated magnet floating on the surface of the mercury was rotated with a magnetic stirrer motor to provide sufficient agitation to keep the precipitate from settling out. The temperature of the solution in the beaker was kept at the boiling point, 100°C. Current was passed through the solution until the voltage and amperage leveled off at a constant value. The solution containing suspended $UF_4 \cdot 3/4H_2O$ was centrifuged off and the solution analyzed. The feed to the cells was 0.5 M UO_2F_2 solution containing 2 or 3 M HF.

Most of the runs were made with an electrode spacing of 0.5 in. and a cathode/anode area ratio of 4.6/1. Runs were made at constant power, at constant voltage, and at constant current density. In the first case, with a constant power of 8.3 watts/in.^{2}, the voltage and current density started at 6.0 volts and 1.4 amp/in.^{2} and leveled off at 11.5 volts and 0.72 amp/in.^{2}, respectively. In the constant voltage runs at 6.0 volts, the current density went from 1.5 to 0.35 amp/in.^{2}. In the constant—current density runs, at 1.0 amp/in.^{2}, the voltage went from 4.5 to 14.1 volts. Increasing the electrode spacing from 0.5 to 1 in. increased the power requirements 30-40%. Decreasing the cathode/anode area ratio to 2.3/1 decreased the power consumption 10-30%. Increasing the starting HF concentration from 2 M to 3 M decreased the power consumption 25-35%. Increasing the stirring rate above that required to prevent solids from settling on the mercury made little or no difference in cell operation.

4.2 Small-Scale Continuous Electrolyses

Current efficiency in the small-scale continuous electrolyses was about 90%, which is about the same as that in the batch experiments. However, the power consumption was considerably higher in the continuous runs as a result of the higher voltages required for the somewhat lower cathode current densities.

Table 4.1 Results of Small-Scale Electrolysis Studies

	Batch[a]	One-Stage Continuous	Two-Stage Continuous	Four-Stage Continuous
Cathode current density (amp/in.^{2})	0.35-1.75	0.8	0.93[b]	1.0[b]
Voltage (volts)	4.5-14.1	11.6	8.9	9.9
Influent stream	0.5 M UO_2F_2, 2 or 3 M HF	0.5 M UO_2F_2, 2 M HF	0.5 M UO_2F_2, 2 M HF	0.5 M UO_2F_2, 3 M HF
Effluent stream	0.0025-0.005	0.025 M UO_2F_2, 1 M HF, 0.48 M suspended $UF_4 \cdot 3/4H_2O$	0.034 M UO_2F_2, 1 M HF, 0.47 M suspended $UF_4 \cdot 3/4H_2O$	0.011 M UO_2F_2, 2 M HF, 0.49 M suspended $UF_4 \cdot 3/4H_2O$
U precipitated as $UF_4 \cdot 3/4H_2O$ (%)	99.0-99.5	95	93	98
Production rate of UF_4 (lb U/hr/ft^2 of cathode)	0.9-1.3	0.97	1.17	1.32
Current efficiency (%)	87-93	88	88	91
Power consumption (watt-hr/g U)	1.44-1.86	3.0	2.3	2.5

[a]Range of operating variables covered in the runs at unsteady state.

[b]Average value; current density was higher in first stage, lower in second.

This is to be expected since the electrical resistance of the feed is much less than that of the product and in a batch electrolysis is comparatively low. In a one-stage continuous cell, all the reduction takes place under high-resistance conditions. In a two-stage electrolysis, the power consumption was lower with a higher production rate than in the one-stage, with 93% of the uranium precipitated, as compared with ~99% in batch studies. In the four-stage runs, 98% of the uranium was precipitated.

The small-scale continuous runs were made in 600-ml Fluorothene A beakers, operated either singly or connected in series as two- or four-stage cells. The only significant difference between these studies and the batch ones was that the feed solution was pumped into the cell continuously and product slurry was withdrawn at the same time. A 1-in. depth of mercury in the bottom of the beakers provided a cathode surface area of approximately 7.5 in.^{2} per stage. A 14.5-in. length of 16-gage platinum wire coiled into a 2-in. spiral provided approximately 2.3 in.^{2} of anode area per stage (i.e., a cathode/anode area ratio of 3.3/1). The electrode spacing was 1 in.

4.3 Anode Corrosion

Platinum is rapidly corroded in the excess HF maintained in the electrolytic cell to provide good conductivity. In laboratory studies platinum anode weight losses varied from 0.3 to 1.2 mg/amp-hr, with an average of about 0.9. The average value corresponds to an anode materials replacement cost of about 30¢ per pound of uranium reduced.

Graphite anodes lost weight at a rate of about 0.2 g/amp-hr. More than half this loss was due to flaking off of graphite particles from the electrode surface, the rest to anodic oxidation of the graphite. This loss corresponds to an anode materials cost of about 2¢ per pound of uranium reduced. Graphites found to be suitable as anode material were grades FC, FPC, and TFPC of the Great Lakes Carbon Corp., grades 85, 185I, and 185ST of the International Graphite Co., and grades CS and AGx58 of the National Carbon Co. Carbon anodes lost weight at a more rapid rate than graphite and also caused discoloration of the electrolyte.

5.0 LARGE-SCALE EQUIPMENT DEVELOPMENT

At the time of the study the vertical-plate cell was considered the most satisfactory and was chosen for making a cost estimate (Sec. 10.0). However, a report on satisfactory operation of an ion-exchange membrane cell which later proved to be superior, is in press. A vertical-plate cell containing such a membrane is now being studied. Preliminary results with it appear encouraging but have not yet been reported.

A number of factors must be considered in designing a continuous electrolytic cell for plant-scale production of UF_4 hydrate. If graphite or carbon anodes are used, they must be readily replaceable. If platinum anodes are used, conditions must be adjusted for low corrosion. The space between the electrodes must be small to minimize voltage drop, and fluid flow in the cell must be directed by some means such as baffling to minimize channeling so that precipitation will be efficient. Both the bulk solution and the mercury surface must be agitated to prevent the UF_4 from settling on the mercury. Heat must be removed to obtain a maximum production rate, but the temperature in the precipitation zone must be high enough for precipitation of the dense $UF_4 \cdot 3/4H_2O$ rather than the bulky $UF_4 \cdot 2.5H_2O$, which forms below about 90°C.

5.1 Channel Cells

Three channel cells were constructed and operated. Current efficiencies and product yields were comparable with laboratory results, but plant-size channel cells are bulky and require considerable floor space. If graphite anodes are used, they must be wrapped or bagged in synthetic fiber cloth to prevent contamination of the product with flaked-off material.

A channel cell (Fig. 5.1) is essentially a continuous equivalent of a constant-voltage batch-electrolysis cell. The feed solution enters at one end and flows lengthwise through the cell between a horizontal mercury-pool cathode, which may be stagnant, flowing cocurrently, or flowing countercurrently to the electrolyte and the anode. The anode may be a series of horizontal rods, a series of vertical rods, or vertical plates. A solid horizontal plate anode

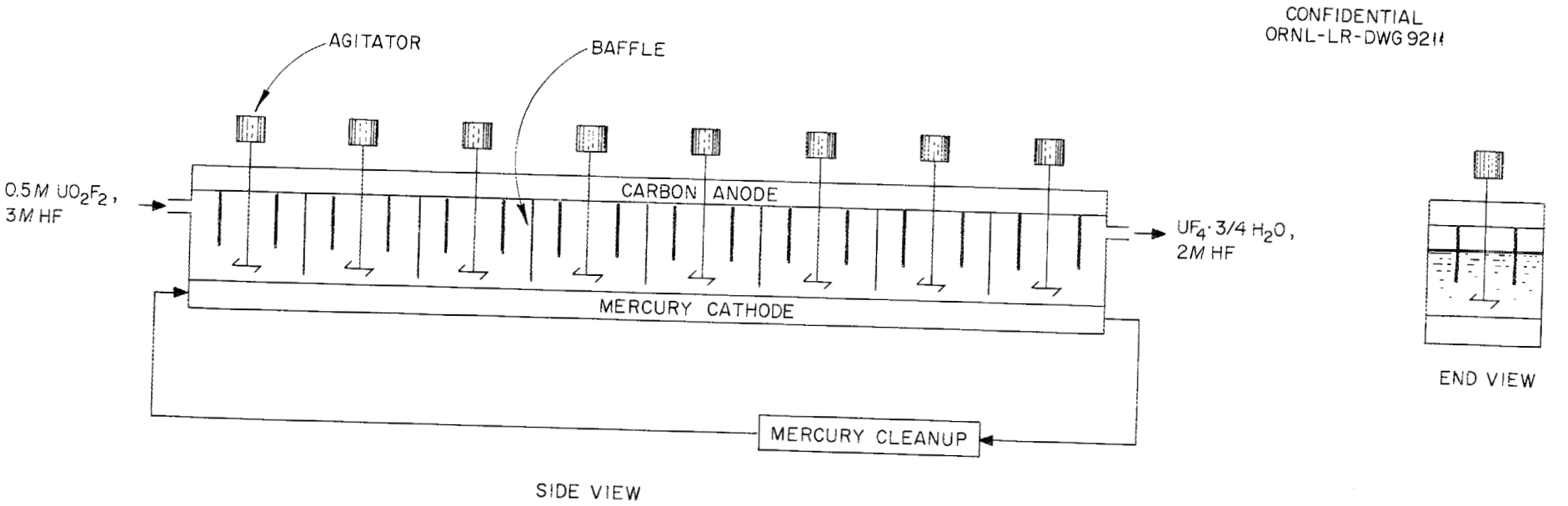

Fig. 5.1. Channel Cell.

[redacted]
ORNL-LR-DWG 9212

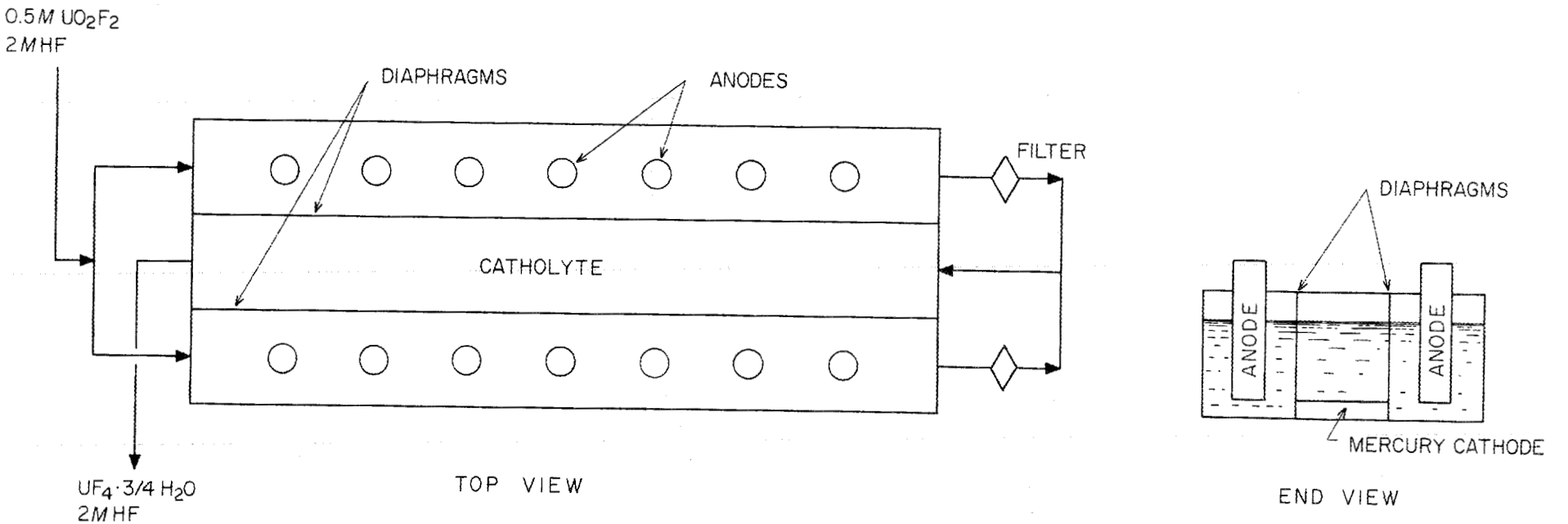

Fig. 5.2. Channel Diaphragm Cell.

[redacted]

ORNL-LR-DWG 9214

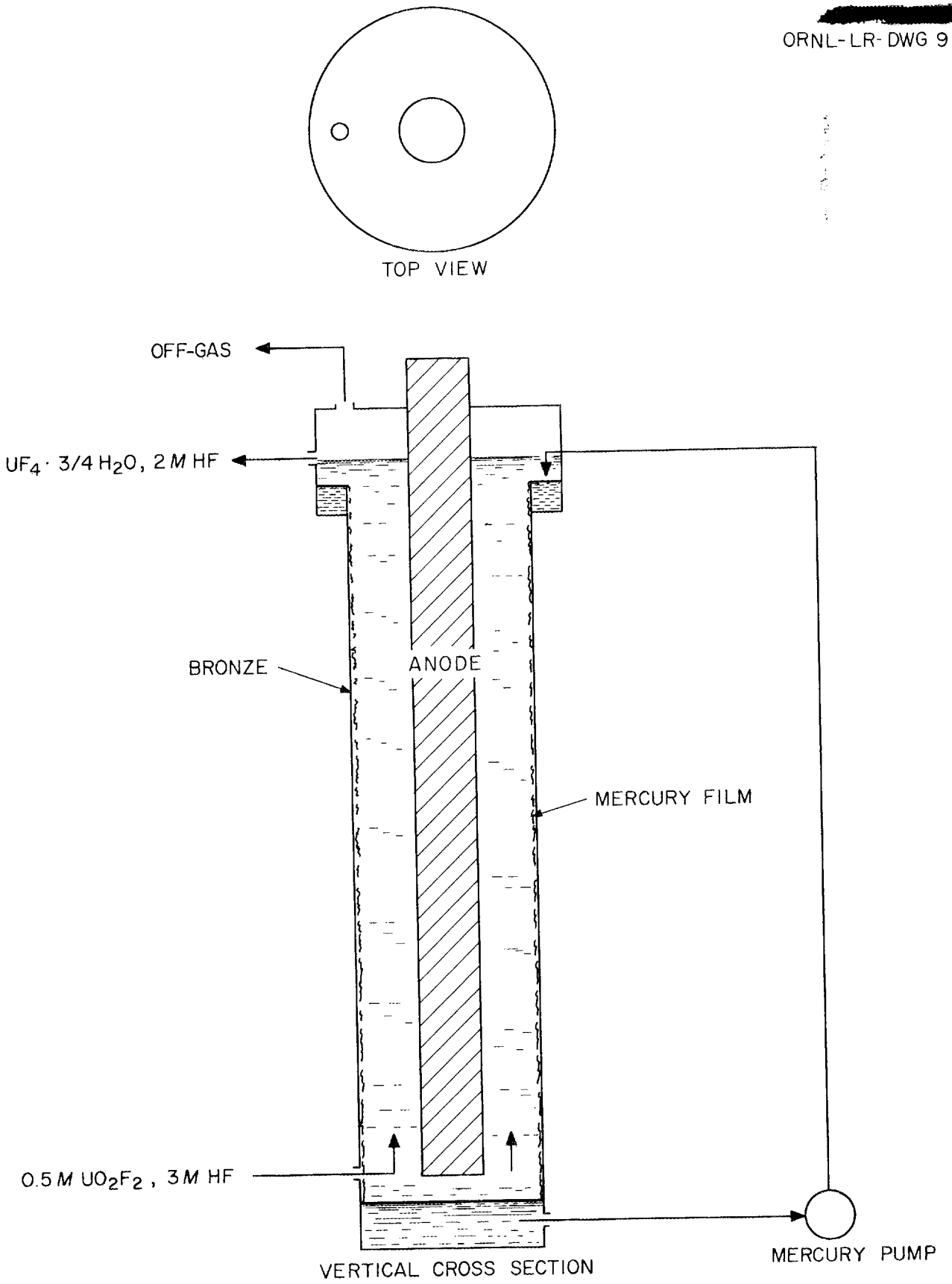

Fig. 5.3. Vertical-Cylinder Cell.

[redacted]

ORNL-LR-DWG 11169

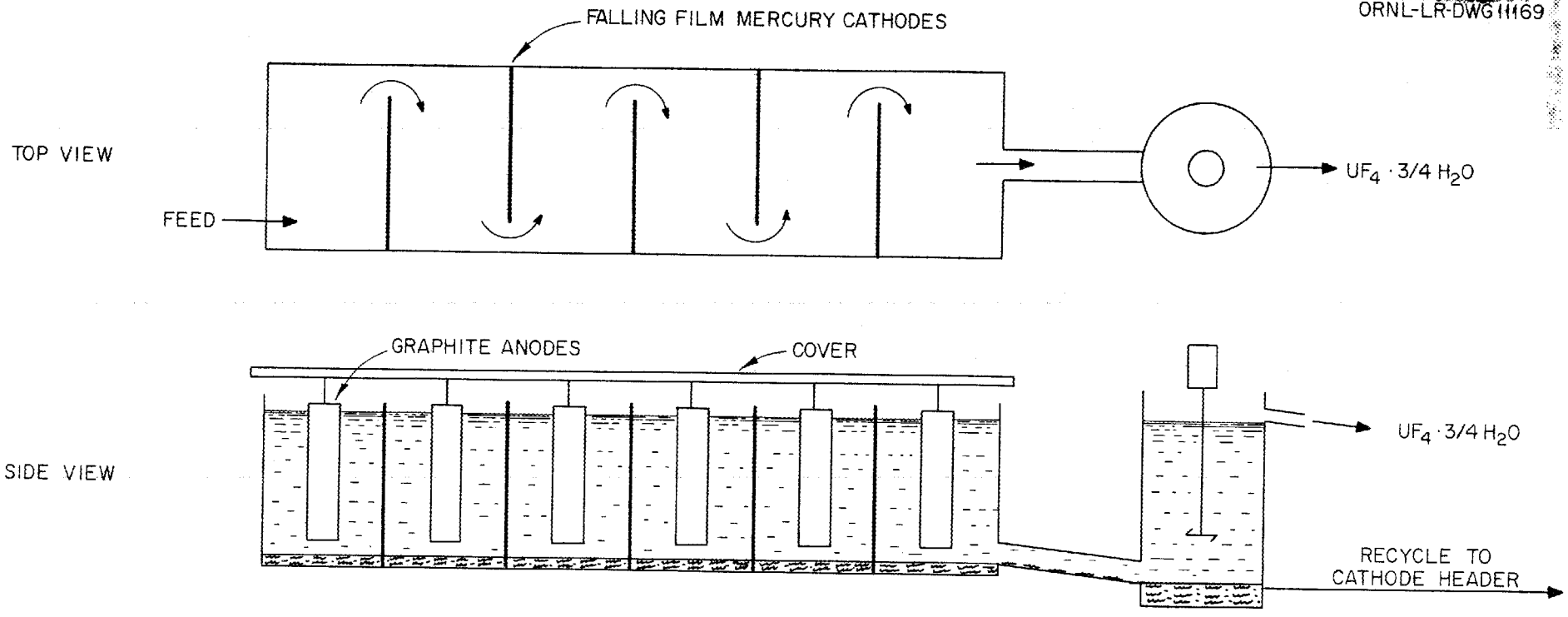

Fig. 5.4. Vertical-Plate Cell.

[redacted]

ORNL-LR-DWG 9213

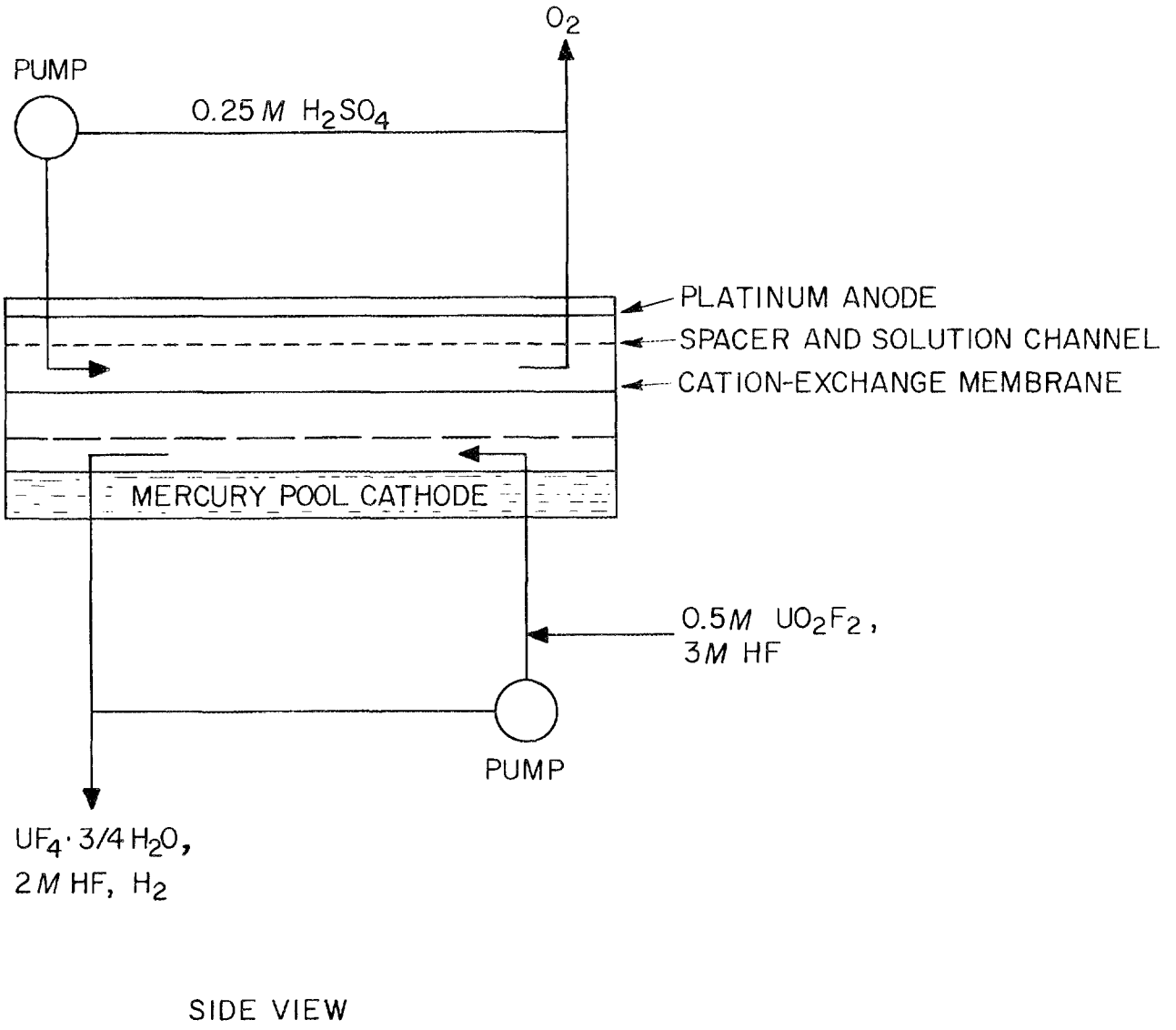

Fig. 5.5. Ion-Exchange Membrane Cell.

would not provide a good path for exit of the electrolytic oxygen produced or allow the introduction of stirrers. Small horizontal rod anodes would give good electrode spacing but would be more difficult to replace than vertical rods or plates suspended from the ceiling. Agitation may be provided by stirrers located between the electrodes if the mercury is stagnant, or by riffles or baffles on the cell floor if the mercury is flowing. Circulating mercury can be purified outside the cell.

The first laboratory channel cell was a Lucite box with inside dimensions of 13 in. long by 2 in. wide by 5 in. deep, with a 1-in.-deep mercury-pool cathode in the bottom and a 0.5-in.-diameter platinum-clad copper rod anode inserted lengthwise through the cell and centered 1 in. above the mercury surface. The liquid level was maintained high enough to completely cover the anode at all times. The cell was divided into five compartments, or stages, with Lucite baffles in an effort to reduce short-circuiting of solution from inlet to outlet. Agitation was provided by magnetic stirrers, with a Teflon-coated magnet in each compartment. The results obtained in this cell at steady state (Table 5.1) compare favorably with those reported for the small-scale units (Sec. 4.0).

The second Lucite laboratory channel cell was similar to the first but was 2.5 in. wide instead of 2.0. Results with this cell were similar to those from the first cell when operated with platinum anodes, but, when a graphite or carbon rod wrapped with nylon cloth was used as the anode, the cell resistance was considerably higher and required a 40% higher voltage at a 30% lower current density.

The third laboratory channel cell, also made of Lucite, had inside dimensions of 64 in. long by 4 in. wide by 4.5 in. deep. It was divided into 15 compartments by means of baffles; each compartment had a plastic-coated paddle stirrer driven from an overhead shaft with a simple electric motor powering all the stirrers. The anodes were two 1-in.-diameter graphite rods wrapped with Dynel or Orlon cloth and inserted through the cell lengthwise. With the wrapped graphite anode the power consumption was greater at a lower

Table 5.1 Results of Channel-Cell Tests

Material of cell and baffles: Lucite

Cathode: 1-in.-deep pool of mercury

Anode: 0.5 in.-dia platinum-clad copper rod in cell 1, wrapped graphite anode in cell 3 lengthwise in cell, 1 in. above mercury surface

Dimensions: Cell 1, 13 in. long, 2 in. wide, 5 in. deep, 5 compartments
Cell 3, 64 in. long, 4 in. wide, 4.5 in. deep, 15 compartments

Temperature: boiling point of electrolyte

	Cell 1	Cell 3
Avg. cathode current density (amp/in.^{2})	1.55	0.78
Voltage (volts)	7.5	10.0
Influent stream	0.5 M UO_2F_2, 3.0 M HF	0.5 M UO_2F_2, 3.0 M HF
Effluent stream	0.04 M UO_2F_2, 2.0 M HF, 0.48 M suspended $UF_4 \cdot 3/4H_2O$	0.06 M UO_2F_2 2.0 M HF, 0.47 M suspended $UF_4 \cdot 3/4H_2O$
U precipitated as $UF_4 \cdot 3/4H_2O$ (%)	96	94
Production rate of UF_4 (lb U/hr/ft^2 of cathode)	1.59	0.86
Current efficiency (%)	86	89
Power consumption (watt-hr/g U)	2.0	2.6

production rate than in the smaller channel cells with bare platinum anodes. The 15-stage cell should have had less solution short-circuiting than the 5-stage cell, and it is not known why only 94% of the uranium was precipitated.

5.2 Channel-Diaphragm Cell

A channel cell was constructed with a cloth diaphragm (e.g., dacron) separating the anolyte and catholyte (Fig. 5.2). The diaphragm made it unnecessary to wrap the anode, since graphite powder that fell into the uranyl fluoride anolyte solution was filtered out before the anolyte passed into the cathode compartment where the UF_4 was formed. However, this cell required more floor space than the channel cell, and the electrodes were farther apart, producing a high voltage. It was not developed further.

5.3 Vertical-Cylinder Cell

A vertical-cylinder cell was constructed which required less floor space than a channel cell (Fig. 5.3). The anode replacement problem was minimized because one large anode in the center provided as much area as several smaller anodes in the channel cells. It was less attractive when scaled up because of the large increase in anode diameter required to keep the electrode spacing small and the increase in mercury pumping head with increased cell height. Agitation was difficult to obtain, and UF_4 hydrate settled in the bottom of the cell. With the increase in electrical input permitted by this cell, the temperature increased, and the circulating mercury stream was used as coolant to maintain a high production rate. However, at the temperature of the mercury-solution interface the bulky $UF_4 \cdot 2.5H_2O$, which is difficult to handle, precipitated. Therefore, cooling should have been provided by some method other than through the mercury.

A cylindrical vertical cell constructed of 2.5- by 30-in. brass pipe operated well in several days' trial at 7-10 volts and 150-250 amp. The anode was a 1-in.-dia graphite rod in the center.

5.4 Vertical-Plate Cell

The vertical-plate cell (Fig. 5.4) eliminated the objectionable features of

the cylindrical cell. Alternation of the vertical cathode mercury film with the anodes resulted in a compact cell with low mercury pumping head and close electrode spacing. A cathode area of 260 in.^{2} was provided in a Haveg box 6 by 7 by 14 in. No mechanical agitation was required because the UF_4 was carried out with the flowing mercury. Operation at the boiling point provided cooling by vaporization. With no anode wrapping, a current of 200-300 amp was carried at 5-7 volts. With Orlon-wrapped anodes, the voltage was 12 volts for 280 amp. When either copper or nickel surfaces wet by the mercury were used, there was less than 0.001% of these materials in the UF_4 product.

The cell was compact with a high electrode area per unit floor space. Anodes were connected to the cover so that they could be conveniently removed. Small amounts of UF_4 accumulated on the walls, but the use of Teflon-lined steel wall should eliminate this problem. Also, the slope of the floor of the cell was not sufficient to ensure removal of all the UF_4. Monel showed less corrosion than copper and was more readily wet with mercury than was nickel. Copper and nickel were not found in the UF_4 product regardless of the corrosion rate of the structural materials.

5.5 Ion-Exchange Membrane Cell

Excess acid is needed in the electrolyte to carry the current after the uranium and fluoride ions have been removed by precipitation of UF_4. When sulfuric acid was substituted for the excess HF, U(IV) was reoxidized to U(VI) on contact with the anode or oxygen. In a cell in which a cation-exchange membrane hydraulically separated the anode and cathode compartments, in which the anolyte was 0.25 M H_2SO_4 and the catholyte 0.5 M UO_2F_2-1 M HF - 0.25 M H_2SO_4, both corrosion of the anode and reoxidation of the U(IV) were prevented (Fig. 5.5).

The cell studied was an 8- by 8-in. Ionics membrane cell designed for water demineralization, with a platinum anode and a mercury cathode. It was operated at 90-100°C, with 20 amp and 6-8 volts. Fluoride transfer into the anolyte was only 0.03 g/amp-hr, and anode corrosion was not noted until the fluoride concentration reached 6-10 g/liter (about 0.5 M).

Since the catholyte spacers of this cell were not designed for handling slurries, the cell became plugged as a result of UF_4 adhering to the spacers and of the channels being too small. Plugging was eliminated by replacing the spacers with Teflon spacers that had larger channels. However, at the temperature used the CR-51 membrane became coated with UF_4 and broke down after 10 hr of operation. Further work on this cell is discussed in a report[1] now in press.

A vertical-plate cell with ion-exchange membranes is now considered the best design and is being investigated. Results have not yet been reported.

A modified Excer process flowsheet is suggested (Fig. 5.6) as a result of the preliminary studies with the membrane cell. In this modification the catholyte is 0.5 M UO_2F_2 with stoichiometric HF, and the anolyte is 0.25 M H_2SO_4. Anode corrosion should be negligible and recovery of uranium in the product should be high. The denser $UF_4 \cdot 3/4H_2O$ formed under these conditions may make decantation possible, instead of filtration or centrifugation. The outstanding economic advantages of the modified flowsheet are the elimination of distillation equipment for concentrating HF and the use of a cheap lead anode protected by the membrane.

6.0 PRODUCT OF ELECTROLYTIC REDUCTION-PRECIPITATION

6.1 Properties

The product produced in the vertical-plate cell operated at the boiling point was $UF_4 \cdot 3/4H_2O$, which had a tap density of 2.5-2.7 g/cc. The supernatant was decanted in laboratory studies, but centrifugation was recommended for the plant-scale process (Fig. 1.1).

6.2 Drying

The $UF_4 \cdot 3/4H_2O$ slurry was allowed to settle and, after the 2 M HF supernatant had been decanted, was dried under a heat lamp until a dry, free-flowing powder was obtained. Most of the dry products contained about 73% total uranium, 70-71% U(IV), and about 4% water, corresponding to 3/4 molecule of water of hydration In a pilot-plant-scale demonstration (1000 lb/day) of the drying step at K-25,

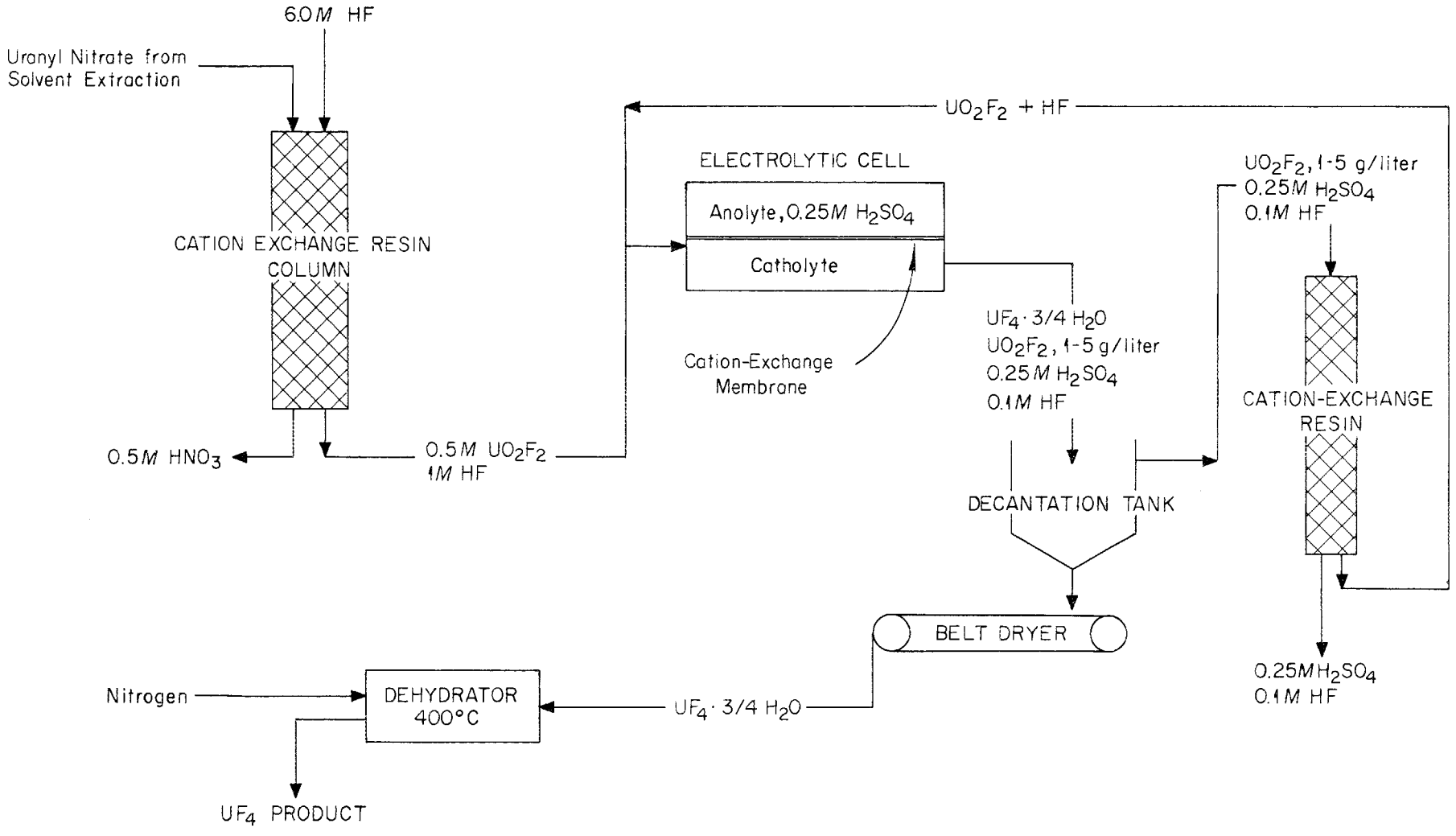

Fig. 5.6. Modified Excer Flowsheet.

a thick $UF_4 \cdot 3/4H_2O$ slurry was fed onto a 2-ft-wide belt and passed under a 6-ft-long section of strip heaters.[6]

6.3 Dehydration

Only a few dehydration runs were made, since dehydration had been extensively investigated at K-25.[3] Heating of the dried $UF_4 \cdot 3/4H_2O$ in an atmosphere of HF at 400°C for 30 min gave UF_4 powder with a water content of about 0.1 wt % (see Fig. 6.1). Analysis of the product showed it to be approximately 100% UF_4. Under the same conditions in a nitrogen atmosphere a product containing only 0.1 wt % H_2O was also obtained, but 3-4% of the U(IV) was oxidized to U(VI). Later experiments have shown that dry nitrogen, from which the oxygen has been removed, is satisfactory. Tap densities of the products varied from 2.5 to 2.7 g/cc.

7.0 ACID RECOVERY

7.1 Nitric Acid

Recovery of 3 M HNO_3 by evaporation was thoroughly studied[8] in connection with the Purex process. The cost of recovering the 0.4 M HNO_3 would, of course, be somewhat higher. Traces of fluoride may make recovery uneconomical.

7.2 Hydrofluoric Acid

The 2 M HF supernatant from the UF_4 precipitation must be concentrated to about 6 M to be recycled in the process. An ion-exchange membrane electrodialysis cell gave the necessary concentration at a satisfactory low cost, and a Karbate-Haveg still for the same purpose is being designed. An evaporator for this acid would have to be made of material that is corrosion resistant at boiling temperatures and that has good heat transfer properties.

Hydrofluoric acid was concentrated[9] from 1.6 M to 7-10 M in an Ionics water demineralization electrodialysis cell (Fig. 7.1) with current efficiencies of 100-200%. Preliminary cost estimates based on semi-pilot-plant-scale experiments indicated that the cost to concentrate from 1.6 to 7 M continuously, with 99% recovery of the HF, would be 3.6¢ per pound of HF with electricity at 1¢ per kilowatt-hour.

[redacted]
ORNL-LR-DWG 9215

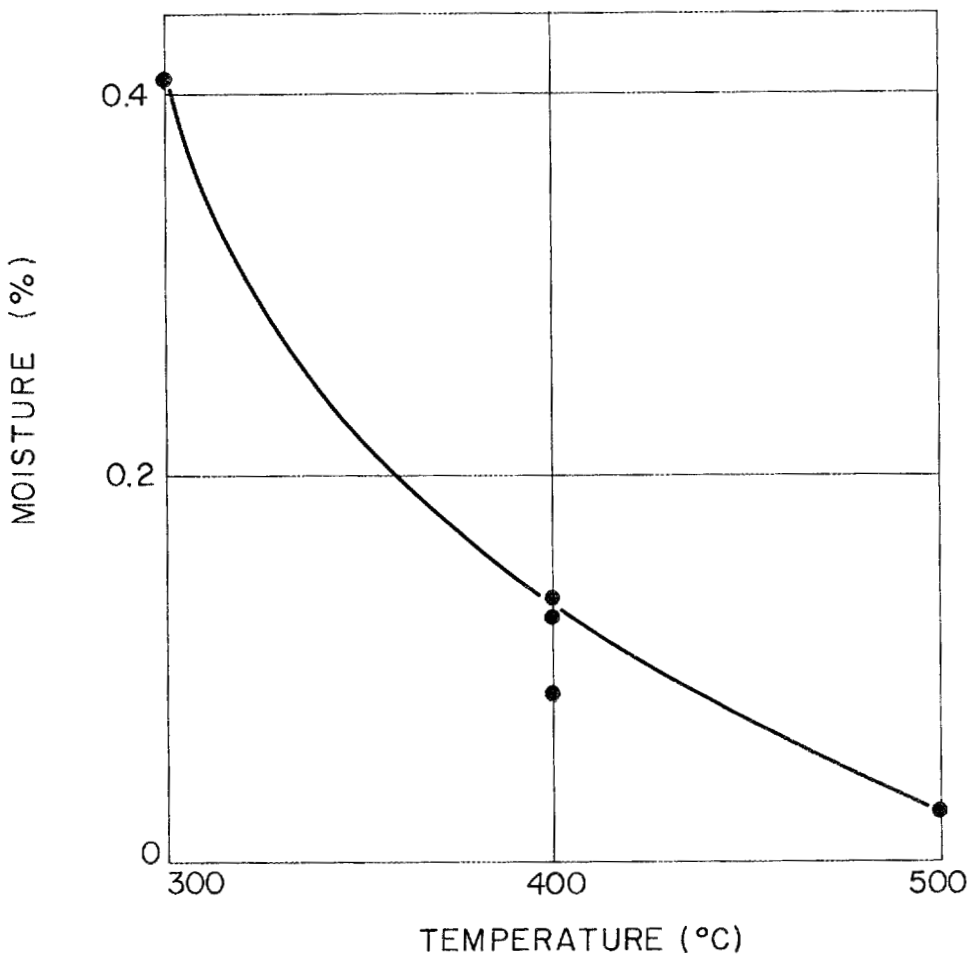

Fig. 6.1. Dehydration of $UF_4 \cdot 3/4\ H_2O$ in an Atmosphere of Hydrogen Fluoride.

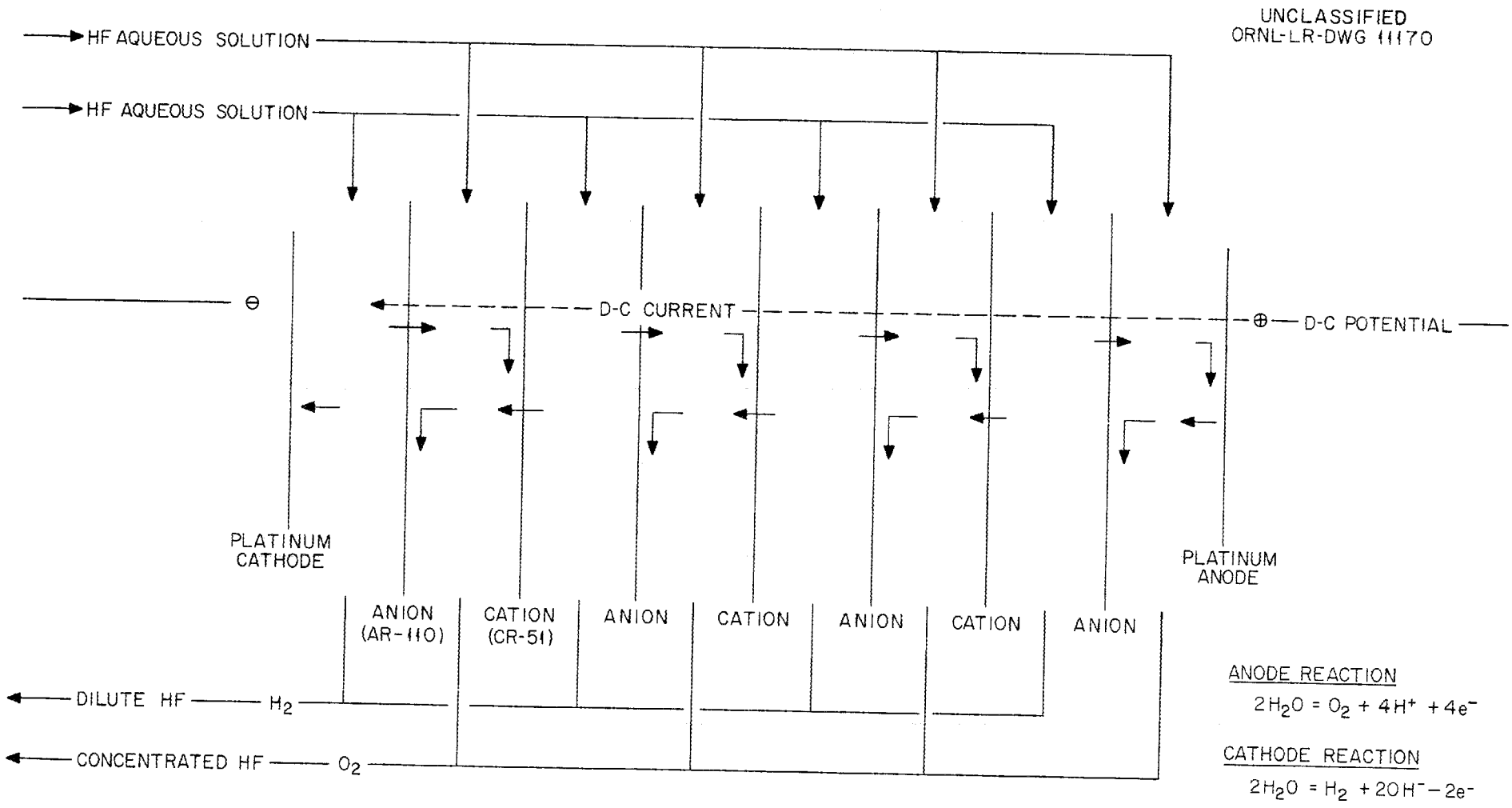

Fig. 7.1. Schematic Diagram of HF Concentration Electrodialysis Unit.

The Karbate-Haveg still (Fig. 7.2) requires a still pot, fractionating column, reboiler, and condenser. The UF_4 cake supernatant with washings is fed to the still pot where it is vaporized and piped to the still column. The still column, condenser, and reboiler will produce a bottom product in the reboiler of about 6 M HF and an overhead of 0.01 M HF. A reflux ratio of 1/1 should give sufficient rectification with only a few transfer units.

8.0 DECONTAMINATION OF URANIUM

The Excer process provides significant separation of impurities from the product uranium, whereas the dry method now in use for preparing UF_4 from uranyl nitrate does not. It may therefore be possible to eliminate one of the solvent extraction purification cycles from the overall uranium processing cycle by substituting the Excer process for the dry process.

Two types of decontamination are required, depending on the source of the uranium being processed. If uranium from ore concentrates is being processed, the contaminants of special concern are those elements which have high-neutron-capture cross section, such as boron and cadmium as well as the major contaminants in the crude ore concentrate. From spent reactor fuel the most important contaminants are those fission products for which solvent extraction is least effective, namely, zirconium, niobium, and ruthenium. The light elements sodium, aluminum, calcium, and iron are also objectionable and enter from the solvent process.

In the Excer ion-exchange step most of the zirconium, niobium, ruthenium, and sodium pass on through the bed with the nitrate while the uranyl ion is being sorbed (see Table 8.1). Addition of a small amount of oxalic acid to the feed or the nitrate wash improves the zirconium and niobium decontamination. Of the cations that sorb on the resin with the uranium, most of the cesium, alkaline earths, and rare earths remain on the resin when the uranium is eluted, but those which form soluble fluoride complexes, such as iron and aluminum, follow the uranium. An occasional treatment of the resin with strong mineral acid or a citrate solution would remove those ions which accumulated on the resin.

UNCLASSIFIED
ORNL-LR-DWG 9216

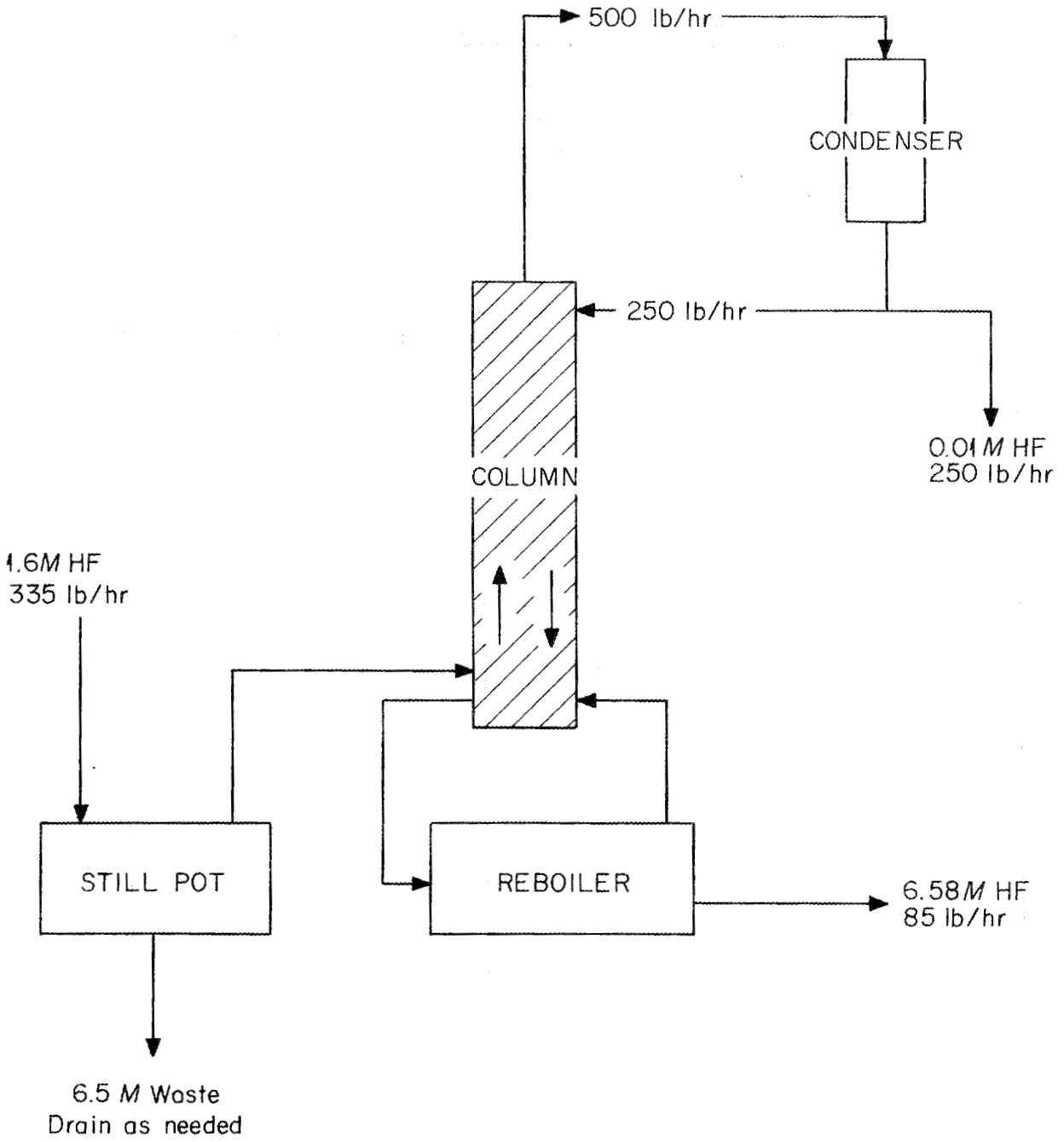

Fig. 7.2. Schematic Diagram of Karbate-Haveg Distillation System for Recovering HF.

Table 8.1 Decontamination of Fission Products by Ion Exchange

Feed: $UO_2(NO_3)_2$, 50 g of uranium per liter
Resin: Dowex 50W, 8% cross linked
Eluant: 2 M HF
Product: UO_2F_2

Contaminant	Decontamination Factors	Location of Contaminant
Gross β	6-33	In feed waste
Ru β	20-22	
Zr β	15-77	
Nb β	2-53	
Sr β	>4600	Stayed on resin
Cs β	500	
Total rare earth β	71-125	

In the Excer electrolytic step some contaminants are removed by electrolysis into the mercury cathode and others stay in the supernatant liquid after the $UF_4 \cdot 3/4H_2O$ is precipitated (see Table 8.2). Sodium and iron are found in the mercury, supernatant, and product. Most of the aluminum remains in the supernatant. The electrolytic decontamination would not be fully achieved if the impurities were allowed to build up in the process by recycling the mercury and supernatant HF without treatment. In an Excer plant where this additional decontamination was desired, the mercury should be given an acid wash or an air-oxiation treatment to remove dissolved impurities either at intervals or continuously.

To obtain maximum decontamination from the elements that stay in the supernatant, it is recommended that the bottoms from the still pot, containing that small fraction of the total uranium which is not precipitated in the electrolytic cell and a small fraction of the total HF in the supernatant, be electrolyzed in a small cell separately from the main line to recover the uranium and that the remaining supernatant be discarded. (see optional decontamination step on flowsheet, Fig. 1.1).

9.0 MATERIALS OF CONSTRUCTION

Since aqueous hydrofluoric acid is a highly corrosive substance, the choice of materials of construction in the Excer process is very limited. Mild steel is satisfactory for equipment handling 70-100% HF, but most metals cannot be considered for HF of concentrations less than 20%, especially at temperatures near 100°C. The use of plastic and plastic-lined equipment is proposed for practically all Excer process equipment. Recent technological developments in the field of nonmetallic chemical processing equipment make this entirely feasible. Dilute aqueous HF (5-20%, 2-10 M) has little or no effect on Uscolite, polyvinyl chloride, rubber, polyethylene, Teflon, Karbate, or Haveg at room temperature. The last three and high-temperature polyethylene can be used at temperatures up through 130°C.

Standard plastic- or rubber-lined ion-exchange equipment similar to that

Table 8.2 Decontamination of Light Metals by Ion Exchange and Electrolysis

Feed: 0.2 M $UO_2(NO_3)_2$ spiked with contaminants

Constituents	Decontamination Factors		
	In Ion Exchange	In Electrolysis	Total
Al	> 14	a	> 14
Ca	1	20	20
Cu	400	a	>400
Co	29	5.1	150
Fe	2.8	2.1	6
Li	3.8	3	12
Pb	40	a	40
Mg	9	>26	>235
Ni	>28	a	> 28
K	18	3	55
Sn	>25	a	>25
Na	1.4	7.5	10
Ag	>28	a	>28
V	3.2	a	> 3.2
Zn	>22	a	>22
Si	77	a	>77

[a]Concentration of contaminant too low to detect.

used in water softening can be used for the Excer ion-exchange step. This could include pipe, valves, and even pumps. The electrolytic cells can be made of solid Haveg or of metal lined with Teflon or high-temperature polyethylene. Haveg is recommended for the HF still and Karbate for the heat exchanger, similar to commercial HCl stills. A Nepton demineralizer, an alternate means of concentrating HF, showed no significant deterioration of ion-exchange membranes or plastic spacers in a 720-hr life test.

A plastic- or rubber-lined centrifuge is recommended for the separation of $UF_4 \cdot 3/4H_2O$ from the supernatant, although some alloys may be acceptable since the operation can be carried out at room temperature. The moving belt in the drier should be nonmetallic, but the other materials in the drier and the dehydrator can be metallic since the atmosphere is dry. It would be desirable to use metals in preference to plastics for such things as some instrument parts, valves, heat exchangers, and complicated equipment subject to high stresses, such as the centrifuge. Monel, silver, magnesium, Hastelloy C, Hastelloy F, Illium R, and Carpenter 20 are satisfactory for HF service in some cases. Monel was found to be unsatisfactory under Excer conditions (see Table 9.1). Magnesium is useful if protected from boiling interfaces, erosion, and traces of nitrate, chloride, or sulfate. The Hastelloys, Illium R, and Carpenter 20 have not yet been adequately proved under Excer conditions but appear promising.

10.0 COST ESTIMATE

A detailed cost estimate was made to compare the Excer process at its present stage of development with competing processes. Continuous operation at a uranium production rate of 22 tons/day, 7 days per week, 315 days per year was assumed. One complete set of equipment was provided, with only a minimum of spare equipment. The estimated basic equipment costs are given in Table 10.1, and the detailed costs are converted to total capital investment in Table 10.2. The building cost was estimated by making a rough building layout in a cubical shape and charging $1 per cubic foot. The estimated annual operating costs are summarized in Table 10.3. The estimated total cost for converting $UO_2(NO_3)_2$ to UF_4 by the Excer process was 25.1¢ per pound.

Table 9.1 Rates of Corrosion of Metals in Dilute HF

HF solution in Karbate still with reflux condenser attached; metal test coupons weighed before and after exposure to corrosive liquid or vapor

Metal	Other Constituent of HF	Corrosion Rate (mils/year)
Boiling 3 M HF, sample completely submerged in solution		
Magnesium	1 ppm Cl^-	0.02
Magnesium		Gained weight
Boiling 3 M HF, sample partly submerged and partly suspended in vapor		
Monel		123[a]
Magnesium		2.4[a]
Magnesium		0[a]
Magnesium		37[a]
Magnesium	0.1 N HNO_3	60
Magnesium	1 ppm Cl^-	18[a]
Magnesium	4 ppm Cl^-	10[b]
6 M HF at room temperature, sample partly submerged and partly suspended in vapor, solution aerated		
Carpenter 20		35
Carpenter 20		49
Carpenter 20		33
Carpenter 20		33
2 M HF at room temperature, sample partly submerged and partly suspended in vapor, solution aerated		
Carpenter 20		5.9
Carpenter 20		6.0

Table 9.1 (cont'd)

2 M HF at room temperature, sample partly submerged and partly suspended in vapor, solution stirred and aerated		
Carpenter 20	UF_4 slurry	10
Carpenter 20	UF_4 slurry	15
Carpenter 20	0.25 M H_2SO_4	7.7
Hastelloy C		1.4
Hastelloy C	0.25 M H_2SO_4	6.1
Hastelloy F		1.3
Hastelloy F	0.25 M H_2SO_4	4.2

[a] Pitting at solution-vapor interface.

[b] After 5 days only 1 ppm of chloride remained in solution.

Table 10.1 Cost of Basic Equipment for Excer Process

Description	Capacity or Size	Materials of Construction	Basic Costs
Chempump and spare	75 gpm	Stainless steel	$ 4,000
2 Ion exchange columns	155 ft^3 of resin each	Rubber-lined steel	70,000
Hold-up vessel	25,000 gal	Rubber-lined steel	24,000
Heat exchanger	National Carbon model S, 700 gal	Karbate	1,300
7 electrolytic cells		Haveg with phosphor-bronze cathode	80,000
Mercury cleanup column	4 in.dia, 4 ft high	Rubber-lined steel	1,000
Pump and spare	3/4 hp	Stainless steel	900
Condenser	National Carbon model 7012	Karbate	3,000
Condensate hold-up tank	300 gal	Haveg	1,000
Slurry hold-up tank with agitator and Karbate cooling coils	1,800 gal	Haveg	5,000
Centrifuge, continuous	24-in.-dia basket	Rubber-lined steel	20,000
Cake hopper	600 gal	Monel	1,300
Drier-dehydrator	Monel	Monel	95,000
Eluant make-up tank	300 gal	Rubber-lined steel	700
3 centrifuge pumps and 3 spares	10 gpm	Rubber-lined steel	4,000
Still pot	100 ft^2 heat-transfer surface	Haveg-Karbate	16,000
Fractionating tower	9 in.dia, 12 ft high	Haveg	12,000
Reboiler	480 ft^2 heat-transfer surface	Haveg-Karbate	8,000

Table 10.1 (cont'd)

Description	Capacity or Size	Material of Construction	Basic Costs
Recovered acid hold-up (small cooling) coils	1,750 gal	Haveg	2,000
Condenser	725 ft^2	Karbate	8,000
Gas filter		Monel-carbon	8,600
Production-storage-vessel hopper	20,000 gal	Monel	20,000
Pulverizer	1 ton/hr	Monel	10,000
HNO_3 evaporator	1,300 ft^2	Stainless steel	28,000
HNO_3 recovery still and bubble-cap column	3 ft dia, 30 ft high	Stainless steel	42,000
Off-gas blowers	4,000 cfm	Monel	7,000
Lime (for waste neutralization) mix tank	500 gal	Mild steel	1,000
Lime pump, centrifugal	10 gpm	Mild steel	400
Monorail crane			5,000
			$479,200
Power supply	208,000 amp at 10 volts	Selenium	343,000
Bus bar			65,000
			$408,000

Table 10.2 Capital Investment for Excer Process

	Process Eqpt.	Elect. Eqpt. and Bldg.
Basic equipment costs, A	$479,000	$408,000
Installed cost (140% A), B	671,000	571,000
Piping (50% B), C	336,000	---
Instrumentation (10% B), D	67,000	---
Total physical without building E	1,074,000	---
Engineering and construction supervision, F	376,000	199,000
Building G	---	220,000
Total physical costs, H	1,450,000	990,000
Contingencies (30% H), I	435,000	297,000
Total capital investment, J	$1,885,000	$1,287,000
Total	$3,172,000	

Table 10.3 Annual Operating Costs for Excer Process

Labor		
Operators, 7 men per shift (1 for central control room, 1 for ion exchange and HNO_3 recovery, 1 for electrolytic cell, 1 for centrifuge and drier-dehydrator, 2 for HF recovery and miscellaneous)	$140,000	
Foreman, 1 man per shift	24,000	
Other, 25% of above two items	41,000	
Maintenance labor,* 6% of total capital investment	190,000	
Anode replacement, 2 men per shift	40,000	
Total Labor		$435,000
Materials		
Chemicals		
HF, 4,706,000 lb	$977,000	
CaO (waste neutralization), 178,000 lb	2,000	
Hg	8,000	
Total	$987,000	
Utilities		
Electricity, 17×10^6 kwh at $0.007/kwh	$119,000	
Steam, 5.72×10^8 lb at $0.68/1000 lb	389,000	
Water, 66×10^6 gal at $0.028/1000 gal	2,000	
Demineralized H_2O, 87×10^6 gal at $0.15/1000 gal	13,000	
Total	$523,000	

Miscellaneous		
Carbon anodes, $0.025/lb U	$341,000	
Anode stockings	36,000	
Maintenance,* 4% of total capital investment	127,000	
Other	40,000	
Total	$544,000	
Total Materials		$2,054,000
Decontamination, 30% of maintenance materials cost		57,000
Overhead, 100% of total labor cost		435,000
Total excluding depreciation		$2,981,000
Depreciation		
Process equipment, 20% of total capital investment	$377,000	
Electrical equipment, 5% of total capital investment	64,000	
Total		$ 441,000
	Grand Total	$3,422,000

Total cost per lb of uranium 25.1¢

*Maintenance costs estimated as 10% of total capital investment and prorated 60% to labor and 40% to materials.

REFERENCES

1. J. A. Marinsky, A. J. Giuffrida, "Development of the Excer Process. II," ORNL-1979 (in preparation).

2. (a) D. C. Overholt, D. A. Orth, F. W. Tober, R. H. Rainey, D. G. Karraker, ORNL-1520, (b) ORNL-1585.

3. A. L. Allen, R. W. Anderson, R. M. McGill, E. W. Powell, "Electro-chemical Preparation of Uranium Tetrafluoride. Part I, Low-Temperature Cell," K-680 (Nov. 10, 1950); R. W. Anderson, A. L. Allen, E. W. Powell, Ibid. Part II, High-Temperature Cell," K-681 (Dec. 22, 1950)

4. J. S. Fox, "Hydration of Uranium Trioxide for Improving Feed Materials Processing, K-1043 (Aug. 11, 1953).

5. Chemical Technology Division Semiannual Progress Report for Period Ending Sept. 30, 1954, p. 7.

6. J. S. Fox, S. D. Schiffman, "Low-Temperature Conversion of Uranium Dioxide to Uranium Tetrafluoride Using Aqueous Hydrogen Fluoride," K-965 (Oct. 10, 1952).

7. I. R. Higgins, J. T. Roberts, "A Countercurrent Solid-Liquid Contactor for Continuous Ion Exchange," Chem. Eng. Prog. Symposium Series 50 (14), 87 (1954). I. R. Higgins, "Mechanical Features of the Higgins Continuous Ion Exchange Column," ORNL-1907 (Setp. 29, 1955).

8. J. M. Chandler, D. O. Darby, ORNL-1519, p. 105-111.

9. E. J. Parsi, "The Electrochemical Utilization of Ion Exchange Membranes in AEC Operations," ORNL-1812 (Jan. 17, 1955).

Appendix

11.0 ELECTROLYTIC REDUCTION OF URANYL FLUORIDE

An electrolytic process for producing $UF_4 \cdot 3/4H_2O$ from UO_2F_2-HF solutions was developed at K-25 by Anderson, Allen, and Powell.[3] They dissolved UO_3 in excess aqueous HF and electrolyzed the solution with a platinum anode and a mercury cathode at 100°C. Uranium reduction rates were 1.35-5.21 g/hr per square inch of cathode, and power utilizations were 1-1.8 watt-hr per gram of uranium with current densities varying from 0.40 to 1.31 amp/in.^{2} and voltages of 3.6-7.2 volts. Current efficiencies were 76-90%. Their product, after filtration, washing, drying, and dehydration, was a fine powder with a surface area of approximately 2.1 m^2/g, a particle size of 1-16 μ, and a bulk density of approximately 2.7 g/cc. It contained less than 0.2% uranyl fluoride, no uranium dioxide, and an average of 178 ppm of total impurities, including 30 ppm of mercury, 26 ppm of carbon, and the remainder largely copper, sodium, potassium, and magnesium. Corrosion of the platinum anode was not noted.

This electrolytic process was based on a feed of UO_3 powder and concentrated (48% or greater) aqueous HF. In essence, 1 mole of UO_3 was dissolved with somewhat more than 4 moles of aqueous HF and placed in an electrolytic cell in which the electrolyte was maintained as 0.5 M UO_2F_2--3 M HF at 100°C. The uranium in the feed was reduced and precipitated as $UF_4 \cdot 3/4H_2O$. The water and the excess HF in the feed distilled from the cell and was condensed as approximately 0.3 M HF. The $UF_4 \cdot 3/4H_2O$ was removed from the cell continuously by circulating the electrolyte-slurry through a filter. Part of the condensate was used to wash UO_2F_2 out of the filter cake, the washings being returned to the UO_3 dissolution tank. The remainder of the condensate was discarded as waste. The electrolysis was carried out with a mercury cathode and a platinum anode, with a cathode/anode area ratio of 1.6/1. An electrode spacing of 1 in. was used, with stirring between the electrodes.