UNCLASSIFIED

CENTRAL RESEARCH LIBRARY
DOCUMENT COLLECTION

MARTIN MARIETTA ENERGY SYSTEMS LIBRARIES
3 4456 0349890 8

ORNL 2010
Engineering

cy. 4

TEMPERATURE DISTRIBUTION IN FLAT PLATE WITH EXPONENTIAL HEAT SOURCE

F. T. Binford M. L. Nelson

CENTRAL RESEARCH LIBRARY
DOCUMENT COLLECTION
LIBRARY LOAN COPY
DO NOT TRANSFER TO ANOTHER PERSON
If you wish someone else to see this document, send in name with document and the library will arrange a loan.

OAK RIDGE NATIONAL LABORATORY
OPERATED BY
UNION CARBIDE NUCLEAR COMPANY
A Division of Union Carbide and Carbon Corporation
UCC
POST OFFICE BOX P · OAK RIDGE, TENNESSEE

UNCLASSIFIED

UNCLASSIFIED

ORNL 2010
Engineering

COPY NO. 4

Contract No. W-7405-eng-26

TEMPERATURE DISTRIBUTION IN FLAT PLATE WITH EXPONENTIAL HEAT SOURCE

F. T. Binford M. L. Nelson

DATE ISSUED

JAN 9 1956

OAK RIDGE NATIONAL LABORATORY
Operated by
UNION CARBIDE NUCLEAR COMPANY
A Division of Union Carbide and Carbon Corporation
Post Office Box P
Oak Ridge, Tennessee

MARTIN MARIETTA ENERGY SYSTEMS LIBRARIES
3 4456 0349890 8

UNCLASSIFIED

ORNL 2010
Engineering

INTERNAL DISTRIBUTION

1. C. E. Center
2. Biology Library
3. Health Physics Library
4-5. Central Research Library
6. Reactor Experimental Engineering Library
7-18. Laboratory Records Department
19. Laboratory Records, ORNL R.C.
20. A. M. Weinberg
21. L. B. Emlet (K-25)
22. J. P. Murray (Y-12)
23. J. A. Swartout
24. E. H. Taylor
25. E. D. Shipley
26. A. S. Householder
27. F. C. VonderLage
28. C. P. Keim
29. W. H. Jordan
30. S. C. Lind
31. F. L. Culler
32. R. S. Livingston
33. A. H. Snell
34. A. Hollaender
35. M. T. Kelley
36. G. H. Clewett
37. J. H. Frye, Jr.
38. K. Z. Morgan
39. T. A. Lincoln
40. C. S. Harrill
41. D. W. Cardwell
42. C. E. Winters
43. E. M. King
44. Lewis Nelson
45. D. D. Cowen
46. J. A. Lane
47. R. A. Charpie
48. S. J. Cromer
49. M. J. Skinner
50. R. R. Dickison
51. F. T. Binford
52. R. B. Briggs
53. J. P. Gill
54. N. F. Lansing
55. T. E. Cole
56. J. A. Cox
57. A. F. Rupp
58. L. G. Alexander
59. R. N. Lyon
60. F. C. Maienschein
61. C. E. Clifford
62. H. F. Poppendiek
63. E. S. Bettis
64. H. C. Claiborne
65. P. M. Reyling
66. G. C. Williams
67. ORNL – Y-12 Technical Library, Document Reference Section

EXTERNAL DISTRIBUTION

68. R. F. Bacher, California Institute of Technology
69. Division of Research and Development, AEC, ORO
70-387. Given distribution as shown in TID-4500 under Engineering category

DISTRIBUTION PAGE TO BE REMOVED IF REPORT IS GIVEN PUBLIC DISTRIBUTION

TEMPERATURE DISTRIBUTION IN FLAT PLATE WITH EXPONENTIAL HEAT SOURCE

F. T. Binford M. L. Nelson

1. STATEMENT OF THE PROBLEM

One of the important problems attendant to the design of a nuclear reactor is the calculation of the temperature distribution, due to gamma ray heating, in structural members in the vicinity of the core. In many cases these structural members can be represented as plates which are cooled by either natural or forced connection on one or on both sides and in some cases also on the ends.

The present discussion is concerned with the case of a thin plate cooled on both sides and on one end by connection and in which an exponential source of heat exists. Such a situation might arise in the case of a vertical plate oriented radially with respect to a reactor core as illustrated in Fig. 1. Under these circumstances one would expect a heat source to exist in the plate which varies exponentially in the y direction, is nearly uniform in the x direction and is symmetric about the mid-point of the core in the z direction provided that the distribution of power density in the z direction is symmetric about the mid-point. Under this assumption, there will be no heat flow in the z direction at $z = 0$ and the maximum temperatures will occur in the xy plane of the plate. We will confine our attention to this case, and make the further assumption that the plate is thin enough so that variations of the heat source are negligible in the x direction. The latter assumption will result in a small positive error in the temperatures calculated and so the results will be conservative.

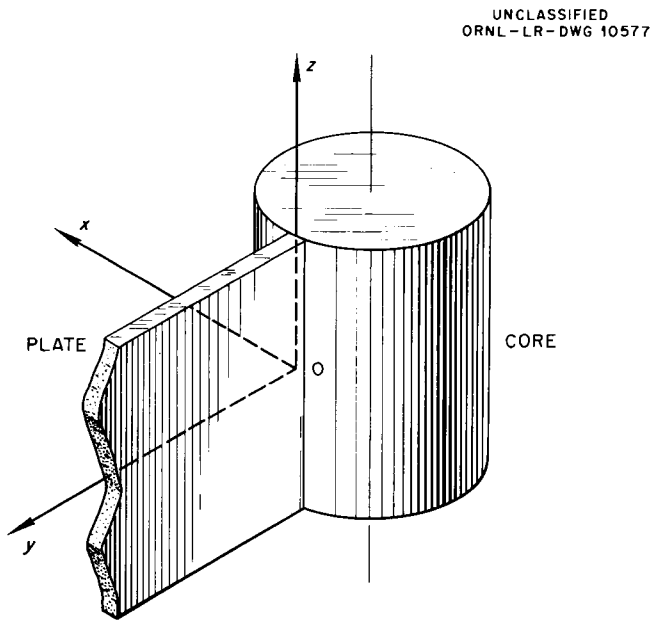

Fig. 1. Thin Vertical Plate Oriented Radially with Respect to a Reactor Core.

For the case outlined above the Fourier heat equation at equilibrium may be written

$$T_{xx}(x,y) + T_{yy}(x,y) + \frac{S_0}{K} e^{-\mu y} = 0 \ , \ -L < x < L \ , \quad 0 < y \ . \tag{1.1}$$

Here the heat source is taken to be $S_0 e^{-\mu y}$, where S_0 is the energy absorbed per unit volume at the end of the plate nearest the core and μ is a constant depending upon the absorption cross section of the plate material. K is the thermal conductivity of the plate and is assumed to be independent of x and y.

For the case of cooling on both sides and at the end nearest the core the boundary conditions are the standard radiation conditions:

$$T_x(L,y) + \alpha T(L,y) = 0 \ , \qquad 0 < y \ ; \tag{1.2}$$

$$T_x(-L,y) - \alpha T(-L,y) = 0 \ , \qquad 0 < y \ ; \tag{1.3'}$$

$$T_y(x,0) - \alpha T(x,0) = 0 \ , \qquad -L < x < L \ , \tag{1.4}$$

where here L is the half width of the plate and the assumption has been introduced that the coolant temperature is everywhere zero. If h is the over-all heat-transfer coefficient assumed to be identical at all surfaces, then the constant α is defined by

$$\alpha \equiv h/K \ .$$

The fourth boundary condition is supplied by introducing the assumption that the plate is infinite in length in the positive y direction and that as y becomes large the temperature of the plate approaches that of the coolant. This assumption is valid if μ is large enough so that μy becomes negligible when y is small compared to the actual y-dimension of the plate. Thus the last boundary condition becomes

$$\lim_{y \to \infty} T(x,y) = 0 \ , \qquad -L < x < L \ . \tag{1.5}$$

From the symmetry of the problem it is clear that condition 1.3′ may be replaced by

$$T_x(0,y) = 0 \ , \qquad 0 < y \ . \tag{1.3}$$

2. SOLUTION OF THE PROBLEM

Methods for the solution of the system of Eqs. 1.1 through 1.5 which is illustrated in Fig. 2 are well known[1] but specific solutions are not readily available in the literature. The solution can be accomplished by assuming

$$U(x,y) + F(x)\, e^{-\mu y} = T(x,y) \ . \tag{2.1}$$

Introducing this transformation into Eqs. 1.1 through 1.5 we obtain

$$U_{xx}(x,y) + U_{yy}(x,y) + [F''(x) + \mu^2 F(x) + A]\, e^{-\mu y} = 0 \ , \tag{2.2}$$

[1] H. S. Carslaw and J. C. Jaeger, *Conduction of Heat in Solids*, Chap. XIII, Clarendon Press, Oxford, England, 1947.

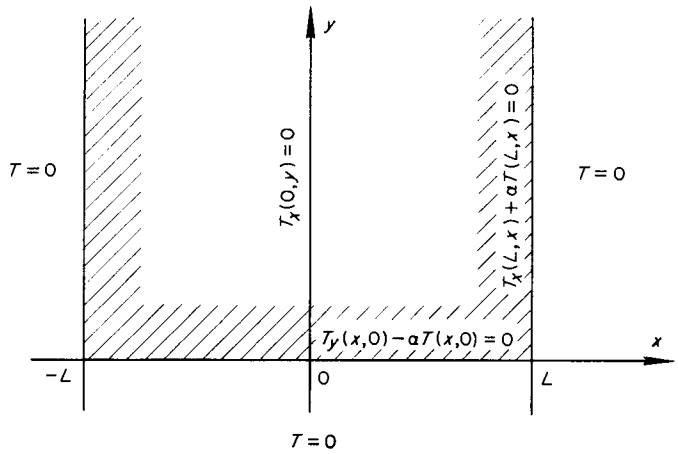

Fig. 2. Boundary Value Problem (1.1) Through (1.5).

(2.3) $$U_x(L,y) + F'(L)\, e^{-\mu y} + \alpha U(L,y) + \alpha F(L)\, e^{-\mu y} = 0 \ ,$$

(2.4) $$U_x(0,y) + F'(0)\, e^{-\mu y} = 0 \ ,$$

(2.5) $$U_y(x,0) - \mu F(x) - \alpha U(x,0) - \alpha F(x) = 0 \ ,$$

and

(2.6) $$\lim_{y\to\infty} U(x,y) = 0 \ ,$$

where for convenience we have set

$$A \equiv S_0/K \ .$$

These equations are satisfied if the following relations hold:

(2.7) $$F''(x) + \mu^2 F(x) + A = 0 \ ,$$

(2.8) $$F'(0) = 0 \ , \qquad F'(L) + \alpha F(L) = 0 \ ,$$

(2.9) $$U_{xx}(x,y) + U_{yy}(x,y) = 0 \ ,$$

(2.10) $$U_x(0,y) = 0 \ , \qquad U_x(L,y) + \alpha U(L,y) = 0 \ ,$$

(2.11) $$\lim_{y\to\infty} U(x,y) = 0 \ , \qquad U_y(x,0) - \alpha U(x,0) = (\mu + \alpha)\, F(x) \ .$$

Solution of the system of Eqs. 2.7 and 2.8 yields

(2.12) $$F(x) = \frac{A}{\mu^2}\left\{\frac{\alpha \cos \mu x}{\alpha \cos \mu L - \mu \sin \mu L} - 1\right\} .$$

The system (2.9), (2.10) and (2.11) can now be handled by separation of the variables.

We set

(2.13) $$U(x,y) \equiv X(x)\, Y(y) \ .$$

Thus we have

$$Y''(y) - \lambda^2 Y(y) = 0 \ .$$

and from the first of Eqs. 2.11

$$\lim_{y\to\infty} Y(y) = 0 \ .$$

Therefore

(2.14) $$Y(y) = c_1 e^{-\lambda y} \ .$$

Similarly

$$X''(x) + \lambda^2 X(x) = 0 \ ,$$

and from (2.10)

(2.15) $$X'(0) = 0 \qquad X'(L) + \alpha X(L) = 0 \ ,$$

so that

(2.16) $$X(x) = c_2 \cos \lambda x \ .$$

In order to obtain a nontrivial solution satisfying the second of Eqs. 2.15 it is necessary that λ be such that

(2.17) $$\lambda L \tan \lambda L = \alpha L \ .$$

Therefore $U(x,y)$ is the sum of solutions of the form

(2.18) $$U_n(x,y) = c_n e^{-\lambda_n y} \cos \lambda_n x \ ,$$

where the λ_n are the solutions of Eq. 2.17. These solutions form an infinite discrete set of eigenvalues but since L is positive by definition and since $U(x,y)$ must be finite for all values of y, it is clear that negative values of λ_n are excluded. The eigenfunctions are of the form

(2.19) $$\Lambda_n \cos \lambda_n x \ ,$$

and it can be shown that if

(2.20) $$\Lambda_n^2 = \frac{2\lambda_n^2}{\lambda_n^2 L + \alpha \cos^2 \lambda_n} \ ,$$

they are orthonormal on the interval $(0,L)$.

In order to apply the condition 2.11 to (2.18) and thus evaluate the c_n, we expand $F(x)$

in terms of the eigenfunctions 2.19:

$$(2.21)\qquad F(x) = \sum_{n=0}^{\infty} \Lambda_n^2 \cos \lambda_n x \int_0^L F(x) \cos \lambda_n x dx$$

$$= 2A\alpha \sum_{n=0}^{\infty} \frac{\cos \lambda_n L \cos \lambda_n x}{(\lambda_n^2 - \mu^2)(\alpha \cos^2 \lambda_n L + \lambda_n^2 L)} .$$

Application of conditions 2.11 to Eq. 2.18, using the expansion 2.21 of $F(x)$, yields

$$(2.22)\qquad c_n = -\frac{2A(\alpha + \mu)\alpha}{\alpha + \lambda_n} \cdot \frac{\cos \lambda_n L}{(\lambda_n^2 - \mu^2)(\alpha \cos^2 \lambda_n L + \lambda_n^2 L)} ,$$

whence

$$(2.23)\qquad U(x,y) = -2A(\alpha + \mu)\alpha \sum_{n=0}^{\infty} \frac{\cos \lambda_n L \cos \lambda_n x\, e^{-\mu y}}{(\alpha + \lambda_n)(\lambda_n^2 - \mu^2)(\alpha \cos^2 \lambda_n L + \lambda_n^2 L)} .$$

Substituting from Eqs. 2.23 and 2.12 into Eq. 2.1 gives

$$(2.24)\qquad T(x,y) = \frac{A}{\mu^2}\left\{\frac{\alpha \cos \mu x}{\alpha \cos \mu L - \mu \sin \mu L} - 1\right\} e^{-\mu y}$$

$$- 2A(\alpha + \mu)\alpha \sum_{n=0}^{\infty} \frac{\cos \lambda_n L \cos \lambda_n x\, e^{-\lambda_n y}}{(\alpha + \lambda_n)(\lambda_n^2 - \mu^2)(\alpha \cos^2 \lambda_n L + \lambda_n^2 L)} .$$

That this function satisfies Eqs. 1.1 through 1.5 on the interval $(0,L)$ can be easily verified by differentiation and substitution. The extension to $(-L,L)$ by symmetry is obvious.

3. VARIATIONS OF THE PROBLEM

The problem solved in Sec. 2 is in reality the problem of a semi-infinite slab of thickness L cooled on one side and on the end and insulated on the other side. From considerations of symmetry, the solution is identical to that in the case of a slab of thickness $2L$ cooled on both sides and on the end.

Consider now the case where the end is insulated but both sides are cooled.

Eqs. 1.1, 1.2, 1.3, and 1.5 still apply but 1.4 is replaced by

$$(3.1)\qquad T_y(x,0) = 0 .$$

Again using the transformation 2.1 we obtain (2.9) and (2.12). The second boundary condition of 2.11 however is replaced by

$$(3.2)\qquad U_y(x,0) = \mu F(x) .$$

Solving (2.9) by separation of variables we again have (2.18)

$$U_n(x,y) = c_n e^{-\lambda_n y} \cos \lambda_n x \ ,$$

where the eigenvalues are again the solutions of $\lambda_n L \tan \lambda_n L = \alpha L$, and the eigenfunctions are of the form $\Lambda_n \cos \lambda_n x$ in which Λ_n is given by (2.20). Thus $F(x)$ is given by (2.21). Using (2.21) together with (2.18) in (3.2) we find that

$$c_n = -\frac{2A\mu\alpha}{\lambda_n} \cdot \frac{\cos \lambda_n L}{(\lambda_n^2 - \mu^2)(\alpha \cos^2 \lambda_n L + \lambda_n^2 L)} \ . \tag{3.3}$$

For this situation

$$T(x,y) = \frac{A}{\mu^2}\left\{\frac{\alpha \cos \mu x}{\alpha \cos \mu L - \mu \sin \mu L} - 1\right\} e^{-\mu y} - 2A\mu\alpha \sum_{n=0}^{\infty} \frac{\cos \lambda_n L \cos \lambda_n x\, e^{-\lambda_n y}}{\lambda_n(\lambda_n^2 - \mu^2)(\alpha \cos^2 \lambda_n L + \lambda_n^2 L)} \ , \tag{3.4}$$

as can be easily verified by differentiation and substitution.

As in the previous case the solution applies either to a plate of thickness L cooled on one face, insulated on the other face and insulated on the end, or to a plate of thickness $2L$ insulated on the end and cooled on both faces.

The extension to a semi-infinite rod cooled at the curved surfaces and on one end is obvious. The solution in this case will of course be in terms of Bessel functions.

4. APPLICATION OF THE RESULTS

We consider Eq. 2.17

$$\lambda L \tan \lambda L = \alpha L \ .$$

The positive values of $\lambda_n L$, which satisfy Eq. 2.17, form an infinite discrete set which approach $n\pi$ as a limit as $\lambda_n L$ becomes large. Thus it is easily seen that the series in (2.24) and in (3.4) converge more rapidly than λ_n^{-4} once λ_n becomes large in comparison to μ. In fact, for most practical cases it is necessary to consider only the first term in the series. Therefore, to a very high degree of approximation Eq. 2.24 becomes

$$T(x,y) \cong \frac{A}{\mu^2}\left\{\frac{\alpha \cos \mu x}{\alpha \cos \mu L - \mu \sin \mu L} - 1\right\} e^{-\mu y} - \frac{2A(\alpha + \mu)\, \alpha \cos \lambda_0 L \cos \lambda_0 x\, e^{-\lambda_0 y}}{(\alpha + \lambda_0)(\lambda_0^2 - \mu^2)(\alpha \cos^2 \lambda_0 L + \lambda_0^2 L)} \ , \tag{4.1}$$

and Eq. 3.4 becomes

$$(4.2) \qquad T(x,y) \cong \frac{A}{\mu^2}\left\{\frac{\alpha \cos \mu x}{\alpha \cos \mu L - \mu \sin \mu L} - 1\right\} e^{-\mu y}$$

$$- \frac{2A\mu\alpha \cos \lambda_0 L \cos \lambda_0 x\, e^{-\lambda_0 y}}{\lambda_0(\lambda_0^2 - \mu^2)(\alpha \cos^2 \lambda_0 L + \lambda_0^2 L)} .$$

The quantity $\alpha L = bL/K$ is known as Biot's number. For convenience we have tabulated in Table 1 values of $\lambda_0 L$, $\cos \lambda_0 L$ and $\alpha \cos \lambda_0 L/(\alpha \cos^2 \lambda_0 L + \lambda_0^2 L)$ for various values of Biot's number.

As an illustration of the use of these equations, consider the case of an aluminum plate cooled by water at 100°F. We take

$$b = 300 \text{ Btu/ft}^2\cdot\text{hr}\cdot{}^\circ\text{F}$$
$$K = 82 \text{ Btu/ft}\cdot\text{hr}\cdot{}^\circ\text{F}$$
$$L = 0.146 \text{ ft (1.75 in.)}$$
$$\mu = 4.8 \text{ ft}^{-1}$$
$$S_0 = 2.61 \times 10^5 \text{ Btu/ft}^3\cdot\text{hr (1 w/g)}$$

Then $A = 3183$ °F/ft^2, $\alpha = 3.658$ ft^{-1}, $\lambda_0 L = 0.6718$, and $\lambda_0 = 4.60$ ft^{-1}.

TABLE 1. VALUES OF PARAMETERS AS A FUNCTION OF BIOT'S NUMBER

Biot's Number, αL	$\lambda_0 L$	$\cos \lambda_0 L$	$\alpha \cos \lambda_0 L/(\lambda_0{}^2 L + \alpha \cos^2 \lambda_0 L)$
0.2	0.433	0.9077	0.515
0.4	0.593	0.8293	0.529
0.6	0.705	0.7616	0.540
0.8	0.791	0.7031	0.551
1.0	0.860	0.6524	0.559
1.2	0.918	0.6074	0.567
1.4	0.967	0.5678	0.574
1.6	1.008	0.5327	0.580
1.8	1.045	0.5019	0.585
2.0	1.078	0.4740	0.589
2.2	1.105	0.4491	0.593
2.4	1.131	0.4258	0.597
2.6	1.153	0.4057	0.600
2.8	1.174	0.3865	0.603
3.0	1.193	0.3689	0.605

For the case (4.1) where the end is cooled we have

$$T(x,y) = 100 + 3183[0.5889 \cos 4.60x\, e^{-4.60y} - (0.5313 \cos 4.80x + 0.0434)\, e^{-4.80y}] ,$$

and for the case (4.2) where the end is insulated we have

$$T(x,y) = 100 + 3183[0.5999 \cos 4.60x\, e^{-4.60y} - (0.5313 \cos 4.80x + 0.0434)\, e^{-4.80y}] .$$

The temperature distributions for these two cases are illustrated in Fig. 3.

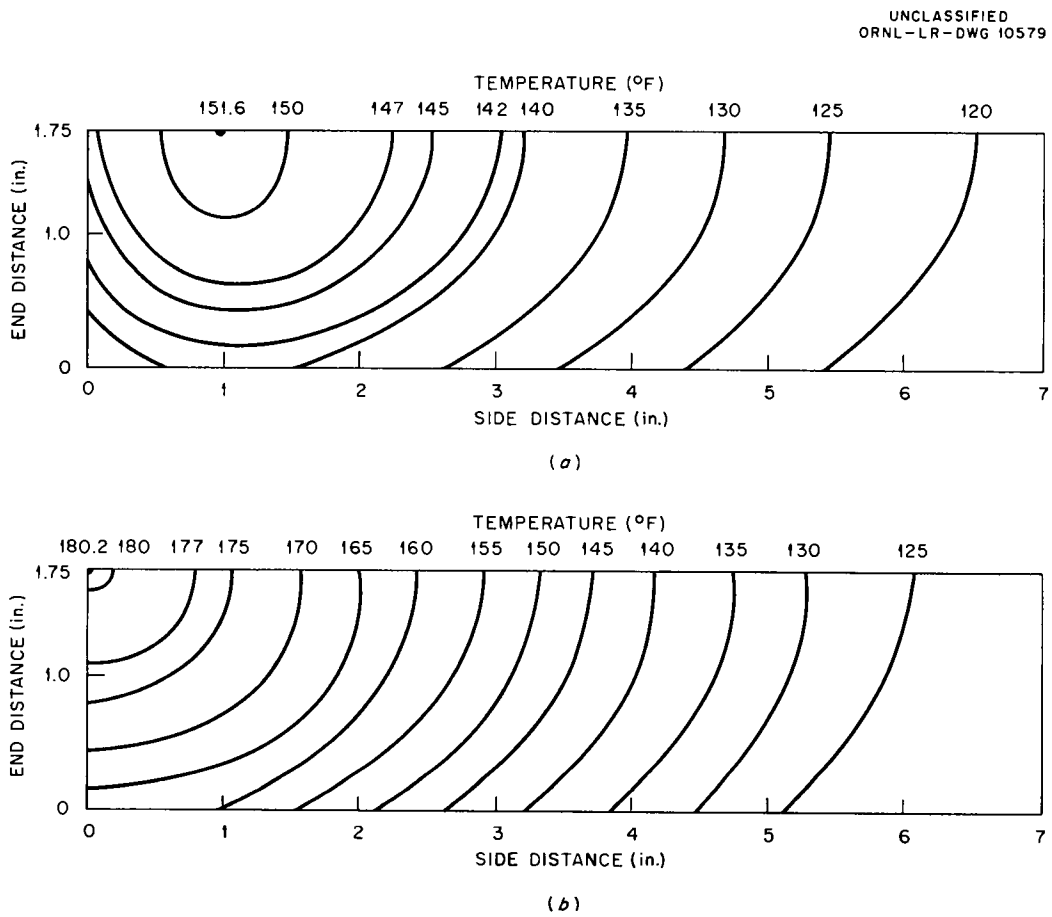

Fig. 3. Temperature Distributions in Aluminum Plate. (*a*) Cooled on the side and one end. (*b*) Cooled on side only.

5. GENERAL SOLUTION

Consider the system of equations:

(5.1) $$T_{xx}(x,y) + T_{yy}(x,y) + S(y) = 0 , \qquad -1 < x < 1 , \; 0 < y$$

(5.2′) $$T_x(-1,y) - \alpha T(-1,y) = 0 , \qquad 0 < y$$

(5.3) $$T_x(1,y) + \alpha T(1,y) = 0 , \qquad 0 < y$$

(5.4) $$T_y(x,0) - \alpha T(x,0) = 0 \ , \qquad -1 < x < 1$$

(5.5) $$\lim_{y\to\infty} T(x,y) = 0 \ , \qquad -1 < x < 1$$

It is sufficient to solve the problem obtained from the preceding one by replacing (5.2′) with

(5.2) $$T_x(0,y) = 0 \ .$$

The boundary conditions 5.2 and 5.3 suggest the eigenvalue problem

(5.6) $$X''(x,\lambda) + \lambda^2 X(x,\lambda) = 0 \ ,$$

$$X'(0,\lambda) = 0 \ , \quad \text{and} \quad X'(1,\lambda) + \alpha X(1,\lambda) = 0 \ .$$

The solution is

(5.7) $$X(x,\lambda) = \Lambda \cos(\lambda x) \ ,$$

where

(5.8) $$\Lambda \sin\lambda - \alpha \cos\lambda = 0 \ ,$$

and

(5.9) $$\Lambda^2 \int_0^1 \cos^2(\lambda x)\, dx = \Lambda^2 \frac{1}{2\lambda^2}[\lambda^2 + \alpha \cos^2\lambda] \equiv 1 \ .$$

Equation 5.8 defines an infinite discrete set of eigenvalues $\lambda_0, \lambda_1, \lambda_2, \ldots$, and (5.7) gives the corresponding eigenfunctions $X(x,\lambda_0), X(x,\lambda_1), \ldots$, which are orthonormal on (0,1) if Λ is chosen to satisfy (5.9).

We define the transform of a function $F(x)$ by

(5.10) $$f(\lambda_n) \equiv \int_0^1 F(x)\, X(x,\lambda_n)\, dx \equiv \mathfrak{I}\{F(x)\} \ ,$$

whose inverse is

(5.11) $$F(x) = \sum_{(n)} f(\lambda_n)\, X(x,\lambda_n) \equiv \mathfrak{I}^{-1}\{f(\lambda_n)\} \ .$$

The operational property of the transform, which can be obtained by differentiating twice by parts is

(5.12) $$\int_0^1 F''(x)\, X(x,\lambda_n)\, dx = -\lambda_n^2 f(\lambda_n) + X(1,\lambda_n)[F'(1) + \alpha F(1)] - X(0,\lambda_n)\, F'(0) \ .$$

Application of the transform to (5.1), (5.4), and (5.5) and introduction of (5.2) and (5.3) together with (5.12) yields

(5.13) $$-\lambda^2 Y(\lambda_n,y) + Y''(\lambda_n,y) + \mathfrak{I}\{1\}\, S(y) = 0 \ ,$$

(5.14) $$Y'(\lambda_n,0) - \alpha Y(\lambda_n,0) = 0 \ ,$$

(5.15) $$\lim_{y\to\infty} Y(\lambda_n,y) = 0 \ ,$$

where we have written

$$Y(\lambda_n, y) \equiv \int_0^1 T(x,y)\, X(x,\lambda_n)\, dx \quad , \tag{5.16}$$

and

$$\mathfrak{I}\{1\} \equiv \int_0^1 X(x,\lambda_n)\, dx = \frac{\alpha\Lambda}{\lambda^2} \cos\lambda \quad . \tag{5.17}$$

A solution of (5.13) which meets the condition 5.14 is

$$Y(\lambda_n, y) = Y(\lambda_n, 0)\, e^{-\lambda_n y} + \int_0^y e^{-\lambda_n (y-t)}\, G(\lambda_n, t)\, dt \quad , \tag{5.18}$$

where

$$G(\lambda_n, t) = \mathfrak{I}\{1\} \int_t^\infty e^{-\lambda(t-\tau)}\, S(\tau)\, d\tau \quad , \tag{5.19}$$

provided that $S(y)$ has no infinite discontinuities, that $\int_0^\infty e^{-\lambda\tau}\, |S(\tau)|\, d\tau$ is convergent, and that

$$Y(\lambda_n, 0) \equiv \frac{\mathfrak{I}\{1\}}{\lambda + \alpha} \int_0^\infty e^{-\lambda\tau}\, S(\tau)\, d\tau \quad . \tag{5.20}$$

Moreover, if the function $S(y)$ is such that there exist positive constants M, B, and μ for which

$$|S(t)| \leqq B e^{-\mu t} \qquad \text{for } M \leqq t$$

the solution given by (5.18) will indeed vanish as y tends to infinity and thus satisfy condition 5.15. In fact for $y \geqq M$

$$|Y(\lambda_n, y)| \leqq a e^{-\lambda_n y} + b e^{-\mu y} \tag{5.21}$$

where a and b do not depend on y.

Application of the inversion formula 5.11 to (5.18) yields

$$T(x,y) = \sum_{(n)} X(x,\lambda_n)\, Y(\lambda_n, y) \quad . \tag{5.22}$$

For convenience a short table of transforms is given below:

SHORT TABLE OF TRANSFORMS

$$X(x,\lambda_n) \equiv \Lambda_n \cos(\lambda_n x)$$

$$\lambda_n \sin\lambda_n - \alpha \cos\lambda_n \equiv 0$$

$$\Lambda_n^2 = \frac{2\lambda_n^2}{\lambda_n^2 + \alpha \cos^2 \lambda_n}$$

$$\mathfrak{I}\{F(x)\} \equiv \int_0^1 F(x)\, X(x,\lambda_n)\, dx$$

	$F(x)$	$\mathfrak{I}\{F(x)\}$
(1)	1	$\Lambda_n \dfrac{\alpha \cos \lambda_n}{\lambda_n^2}$
(2)	x	$\dfrac{\Lambda_n}{\lambda_n^2}[(\alpha + 1) \cos \lambda_n - 1]$
(3)	$\dfrac{\alpha + 1}{\alpha} - x$	$\dfrac{\Lambda_n}{\lambda_n^2}$
(4)	$e^{-\mu x}$	$\dfrac{\Lambda_n}{\lambda_n^2 + \mu^2}[(\alpha - \mu)\, e^{-\mu} \cos \lambda_n + \mu]$
(5)	$\cosh \mu x$	$\dfrac{\Lambda_n}{\lambda_n^2 + \mu^2}\, p(i\mu) \cos \lambda_n$

$$p(z) \equiv \alpha \cos z - z \sin z$$

(6)	$\sinh \mu x$	$\dfrac{\Lambda_n}{\lambda_n^2 + \mu^2}[-i\, q(i\mu) \cos \lambda_n - \mu]$

$$q(z) \equiv \alpha \sin z + z \cos z$$

(7)	$\dfrac{1}{\mu}\left[\dfrac{-iq(i\mu)}{p(i\mu)} \cosh \mu x - \sinh \mu x\right]$	$\dfrac{\Lambda_n}{\lambda_n^2 + \mu^2}$
(8)	$\cos \mu x$	$\dfrac{\Lambda_n}{\lambda_n^2 - \mu^2}\, p(\mu) \cos \lambda_n$
(9)	$\sin \mu x$	$\dfrac{\Lambda_n}{\lambda_n^2 - \mu^2}[q(\mu) \cos \lambda_n - \mu]$
(10)	$\dfrac{1}{\mu}\left[\dfrac{q(\mu)}{p(\mu)} \cos \mu x - \sin \mu x\right]$	$\dfrac{\Lambda_n}{\lambda_n^2 - \mu^2}$
(11)	$\dfrac{\alpha \cos \mu x - p(\mu)}{\alpha \mu^2 p(\mu)}$	$\dfrac{\Lambda_n \cos \lambda_n}{\lambda_n^2(\lambda_n^2 - \mu^2)}$

6. EXAMPLE OF THE USE OF THE GENERAL METHOD

We consider the case where

$$S(y) \equiv A e^{-\mu y} \quad . \tag{6.1}$$

Then Eqs. 5.1 through 5.5 describe the identical problem (1.1) through (1.5) except that the functions are defined on $(-1,1)$ rather than $(-L,L)$. By using (5.18) and (5.20) one readily finds

$$Y(\lambda_n, y) = \frac{A\mathfrak{F}\{1\}\, e^{-\mu y}}{\lambda_n^2 - \mu^2} - \frac{A(\mu + \alpha)\, \mathfrak{F}\{1\}\, e^{-\lambda_n y}}{(\lambda_n^2 - \mu^2)(\lambda_n + \alpha)} \, . \tag{6.2}$$

Using the value of $\mathfrak{F}\{1\}$ and (11) of the Short Table of Transforms, together with the inversion formula 5.11 we obtain

$$T(x,y) = \frac{A}{\mu^2}\left[\frac{\alpha \cos \mu x}{\alpha \cos \mu - \mu \sin \mu} - 1\right] e^{-\mu y} - 2A(\mu + \alpha)\, \alpha \sum_{n=0}^{\infty} \frac{\cos \lambda_n \cos \lambda_n x\, e^{-\lambda_n y}}{(\lambda_n + \alpha)[\lambda_n^2 + \alpha \cos^2 \lambda_n][\lambda_n^2 - \mu^2]} \, , \tag{6.3}$$

which indeed agrees with (3.4) for the case $L \equiv 1$.