UNCLASSIFIED

CENTRAL RESEARCH LIBRARY
DOCUMENT COLLECTION

MARTIN MARIETTA ENERGY SYSTEMS LIBRARIES
3 4456 0349892 6

ORNL-1998
Engineering cy. 4

URANIUM RAW MATERIALS PROCESS COST ESTIMATES ONE THROUGH TEN

R. H. Guymon
B. B. Klima
A. D. Ryon
W. T. Ward
R. R. Wiethaup

CENTRAL RESEARCH LIBRARY
DOCUMENT COLLECTION

LIBRARY LOAN COPY

DO NOT TRANSFER TO ANOTHER PERSON

If you wish someone else to see this document, send in name with document and the library will arrange a loan.

OAK RIDGE NATIONAL LABORATORY
OPERATED BY
UNION CARBIDE NUCLEAR COMPANY
A Division of Union Carbide and Carbon Corporation
UCC
POST OFFICE BOX P · OAK RIDGE, TENNESSEE

UNCLASSIFIED

LEGAL NOTICE

This report was prepared as an account of Government sponsored work. Neither the United States, nor the Commission, nor any person acting on behalf of the Commission:

A. Makes any warranty or representation, express or implied, with respect to the accuracy, completeness, or usefulness of the information contained in this report, or that the use of any information, apparatus, method, or process disclosed in this report may not infringe privately owned rights; or

B. Assumes any liabilities with respect to the use of, or for damages resulting from the use of any information, apparatus, method, or process disclosed in this report.

As used in the above, "person acting on behalf of the Commission" includes any employee or contractor of the Commission to the extent that such employee or contractor prepares, handles or distributes, or provides access to, any information pursuant to his employment or contract with the Commission.

ORNL-1998

Contract No. W-7405-eng-26

MATERIALS CHEMISTRY DIVISION
G. H. Clewett, Director

ENGINEERING SECTION
H. M. McLeod, Jr., Supervisor

URANIUM RAW MATERIALS PROCESS COST ESTIMATES ONE THROUGH TEN

November 15, 1955

Authors

R. H. Guymon W. T. Ward
B. B. Klima R. R. Wiethaup
A. D. Ryon

Edited by
K. O. Johnsson

Date Issued

JUN 15 1956

OAK RIDGE NATIONAL LABORATORY
Operated by
UNION CARBIDE NUCLEAR COMPANY
Post Office Box P
Oak Ridge, Tennessee

MARTIN MARIETTA ENERGY SYSTEMS LIBRARIES

3 4456 0349892 6

INTERNAL DISTRIBUTION

1. C. E. Center
2. Biology Library
3. Health Physics Library
4-5. Central Research Library
6. Reactor Experimental Engineering Library
7-26. Laboratory Records Department
27. Laboratory Records, ORNL R.C.
28. A. M. Weinberg
29. L. B. Emlet (K-25)
30. J. P. Murray (Y-12)
31. J. A. Swartout
32. E. H. Taylor
33. E. D. Shipley
34. G. H. Clewett
35. W. H. Jordan
36. M. L. Nelson
37. S. C. Lind
38. F. L. Culler
39. A. Hollaender
40. A. H. Snell
41. M. T. Kelley
42. J. A. Lane
43. K. Z. Morgan
44. J. H. Frye, Jr.
45. C. P. Keim
46. R. S. Livingston
47. A. S. Householder
48. T. A. Lincoln
49. C. S Harrill
50. C. E. Winters
51. D. W. Cardwell
52. E. M. King
53. A. J. Miller
54. D. D. Cowen
55. M. J. Skinner
56. S. J. Cromer
57. G. E. Boyd
58. R. R. Dickison
59. H. F. Bauman
60. C. A. Blake
61. K. B. Brown
62. J. R. Buchanan
63. C. F. Coleman
64. D. J. Crouse
65. F. L. Daley
66. J. S. Drury
67. W. K. Eister
68. W. R. Grimes
69. R. H. Guymon
70. K. O. Johnsson
71. B. B. Klima
72. H. M. McLeod, Jr.
73. J. F. Manneschmidt
74. A. D. Ryon
75. R. R. Wiethaup
76. G. C. Williams
77. J. Beigleisen (consultant)
78. R. W. Dodson (consultant)
79. H. Eyring (consultant)
80. H. L. Hazen (consultant)
81. J. W. Kennedy (consultant)
82. J. H. Rushton (consultant)
83. G. T. Seaborg (consultant)
84. C. E. Larson (consultant)
85. J. C. Chu (consultant)
86. ORNL - Y-12 Technical Library, Document Reference Section

EXTERNAL DISTRIBUTION

87. R. F. Bacher, California Institute of Technology
88-90. Atomic Energy Commission, Washington (1 copy to D. R. Miller)
91. Bureau of Mines, Salt Lake City
92-98. Division of Raw Materials, Washington
99-102. Grand Junction Operations Office
103-104. Division of Research and Development, AEC, ORO (1 copy to E. E. Sinclair)
105. Hanford Operations Office
106-479. Given distribution as shown in TID-4500 under Engineering category

DISTRIBUTION PAGE TO BE REMOVED IF REPORT IS GIVEN PUBLIC DISTRIBUTION

CONTENTS

Foreword 4

Introduction 5

Recovery Processes 6

Comparison of Processing Costs 8

General Criteria 8

Uranium Recovery from Clarified Leach Liquor
- Amex Processes 11
  - Amex Process I (Estimate No. 1). 13
  - Amex Process II (Estimate No. 2) 21
  - Amex Process III (Estimate No. 3). 29
- Dapex Clarified Liquor Process (Estimate No. 4) . . 38

Uranium Recovery from Slimes Slurry
- Dapex Slimes Slurry Process (Estimate No. 5). . . . 48

Uranium Recovery from Leach Slurry
- Dapex Slurry Process (Estimate No. 6) 60

Auxiliary Processes
- Clarification (Estimate No. 7). 69
- Sands-Slimes Separation (Estimate No. 8). 76
- Drying and Product Packaging (Estimate No. 9) . . . 76
- Calcining and Product Packaging (Estimate No. 10) . 89

References 95

Appendix A--Definition of Terms 96

Appendix B--Prices at Grand Junction, Colorado 98

FOREWORD

The Materials Chemistry Division, of the Oak Ridge National Laboratory, has developed the use of reagents which when dissolved in organic solvents will extract uranium from aqueous solutions of the type which result from the sulfuric acid leaching of Carnotite ores. The development of processes using these reagents has been actively pursued in bench-scale units by the division since the middle of 1954. Starting in January, 1955, cost estimates have been prepared to evaluate the costs of uranium recovery using these processes.

General declassification of raw materials information provides the opportunity to present these estimates to other laboratories engaged in raw materials studies. Additional estimates will be made by this laboratory from time to time and these will be issued as a part of the series of which this report is the first installment.

INTRODUCTION

A part of the raw materials program of the Oak Ridge National Laboratory has been concerned for several years with an investigation and evaluation of different reagents to extract uranium from the aqueous solutions that are encountered in the processing of uranium ores.* As a result of these studies a number of possible flow sheets have been defined for the recovery of uranium by solvent extraction. These proposed processes, if they are to be considered for plant use, must be further tested and proven. To accomplish this, a raw materials process testing program was initiated at ORNL in 1954 to provide engineering studies which have the following objectives: (1) to establish the technical feasibility of the various uranium recovery processes, (2) to provide the additional chemical and engineering data that are available only from larger-scale continuous operations, (3) to provide design information for building pilot plants, and (4) to prepare cost estimates for the purpose of comparing the costs of proposed processes with those for other uranium recovery processes. The purpose of this report is to present the estimates which have been made as part of this program and to compare the costs of recovery.

Definitions of Specialized Terminology used in this report are given in Appendix A.

---

*Uranium Chemistry of Raw Materials Section, K. B. Brown, Supervisor.

RECOVERY PROCESSES

Uranium recovery processes may follow many different routes from mining of the ore through packaging of the product (uranium concentrate). All of the processing routes examined in this report are based on a sulfuric acid leach of the ground ore. Since the steps from mining of the ore through leaching are common to all, only the processing costs from the leach slurry through the packaged product have been evaluated (see Fig. 1*) 1/.

The processing routes* are basically similar in that each involves the preferential removal of uranium from an aqueous solution of metallic compounds by an organic extractant, stripping of the uranium into an aqueous solution, precipitation of the uranium, filtration of the precipitate, and drying and packaging of the concentrate. They may be divided into three categories, depending upon the point at which the extraction from the aqueous phase is accomplished: from a clarified liquor, from a slimes slurry, or directly from the leach slurry. The first requires a clarification step before extraction; the second, a sands-slimes separation step. Estimates are presented for the Amex and Dapex processes which have been developed by this laboratory and recover uranium from these three categories of processing streams.

The Amex process is a solvent extraction process which uses specific primary, secondary or tertiary amines as extraction agents, and is restricted to extraction from clarified liquors because of excessive losses of organic when solids are present. Three process variations using the same secondary amine are examined in this report, based on: I, stripping with sodium carbonate; II, stripping with sodium chloride; III, stripping with sodium chloride followed by a sodium carbonate secondary strip.

The Dapex process is a solvent extraction process which uses specific dialkyl phosphoric acids as extraction agents. It is applicable to extraction from leach slurry, slimes slurry or clarified liquor. One estimate is presented for each category.

---

*Processing routes are shown using column ion exchange, resin-in-pulp (R.I.P.) and the Dow slurry processes to give the complete over-all picture of present recovery processes; however, estimates for these processes are not included in this report.

UNCLASSIFIED
ORNL-LR-DWG 9598

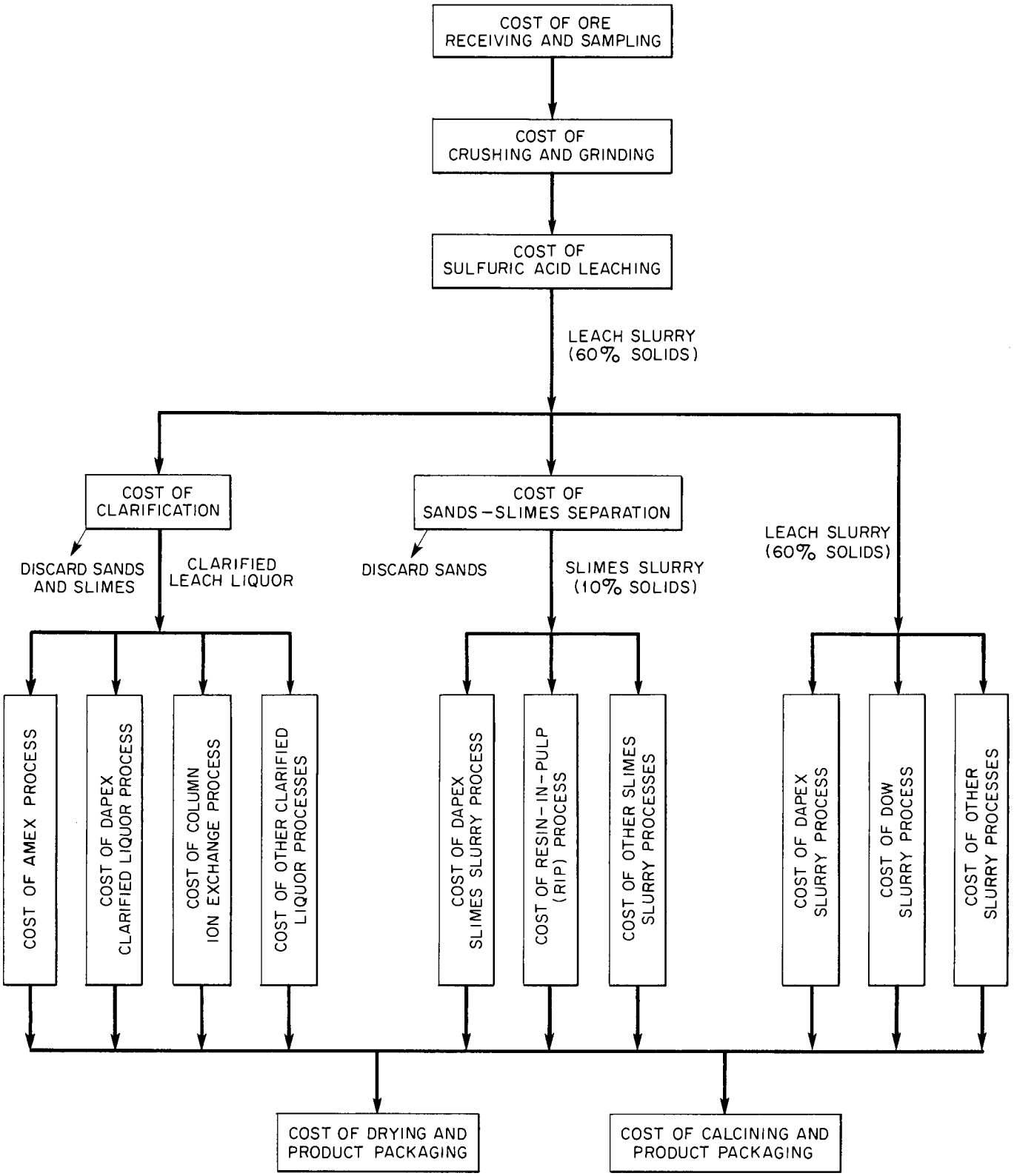

Fig. 1. Relationship Between Cost Estimates of Various Processes in Uranium Recovery.

The Amex process is a firm process on which there is available much technical and laboratory information. The Dapex process, however, is a newer process and has not been as thoroughly tested and the estimates for the Dapex processes are made using optimistic process conditions.

COMPARISON OF PROCESSING COSTS

Comparative costs of producing uranium concentrate (product) from sulfuric acid leach slurry by various processes are shown in Table 1 and Figure 2. These costs include direct operating costs and amortization at a mill capacity of 200 tons of ore per day.

It can be seen that the cost of recovery from clarified liquor and from leach slurry are competitive using the processes shown. Recovery costs following a sands-slimes separation is significantly greater than recovery from either the leach slurry or the clarified liquor.

It should be noted that there are slight differences in uranium recovery efficiencies for the various processes. No penalty for loss of uranium has been assessed to allow for these differences.

GENERAL CRITERIA

The general criteria pertinent to these estimates are listed below. Specific criteria applicable to each process is listed under that estimate.

(a) The plant will be sized to process the streams resulting from the treatment of 200 tons of ore per day.

(b) The ore assay is 0.3% U_3O_8.

(c) The ground ore is leached with sulfuric acid.

(d) The leached solids are assumed to consist of 30% slimes and 70% sands.

(e) The leach slurry is assumed to contain 95% of the original uranium in solution.

TABLE 1. SUMMARY OF COST OF URANIUM RECOVERY

(Direct Operating Costs and Amortization)

Recovery Process Used	Cost of Process (cents per lb U_3O_8)				
	Clarification	Sands-Slimes Separation	Recovery	Calcining* and Product Packaging	Total
Uranium recovery from clarified liquor					
Amex Process, I	24.6	-	45.8	5.5	75.9
Amex Process, II	24.6	-	36.7	5.5	66.8
Amex Process, III	24.6	-	41.9	5.5	72.0
Dapex Process	24.6	-	47.1	5.5	77.2
Uranium recovery from slimes slurry					
Dapex Process	-	10.6	66.0	5.5	82.1
Uranium recovery from leach slurry					
Dapex Process	-	-	59.2	5.5	64.7

*Drying and product packaging costs 3.7 cents per pound of U_3O_8 and might be used for cost purposes instead of calcining and product packaging.

UNCLASSIFIED
ORNL-LR-DWG 9846

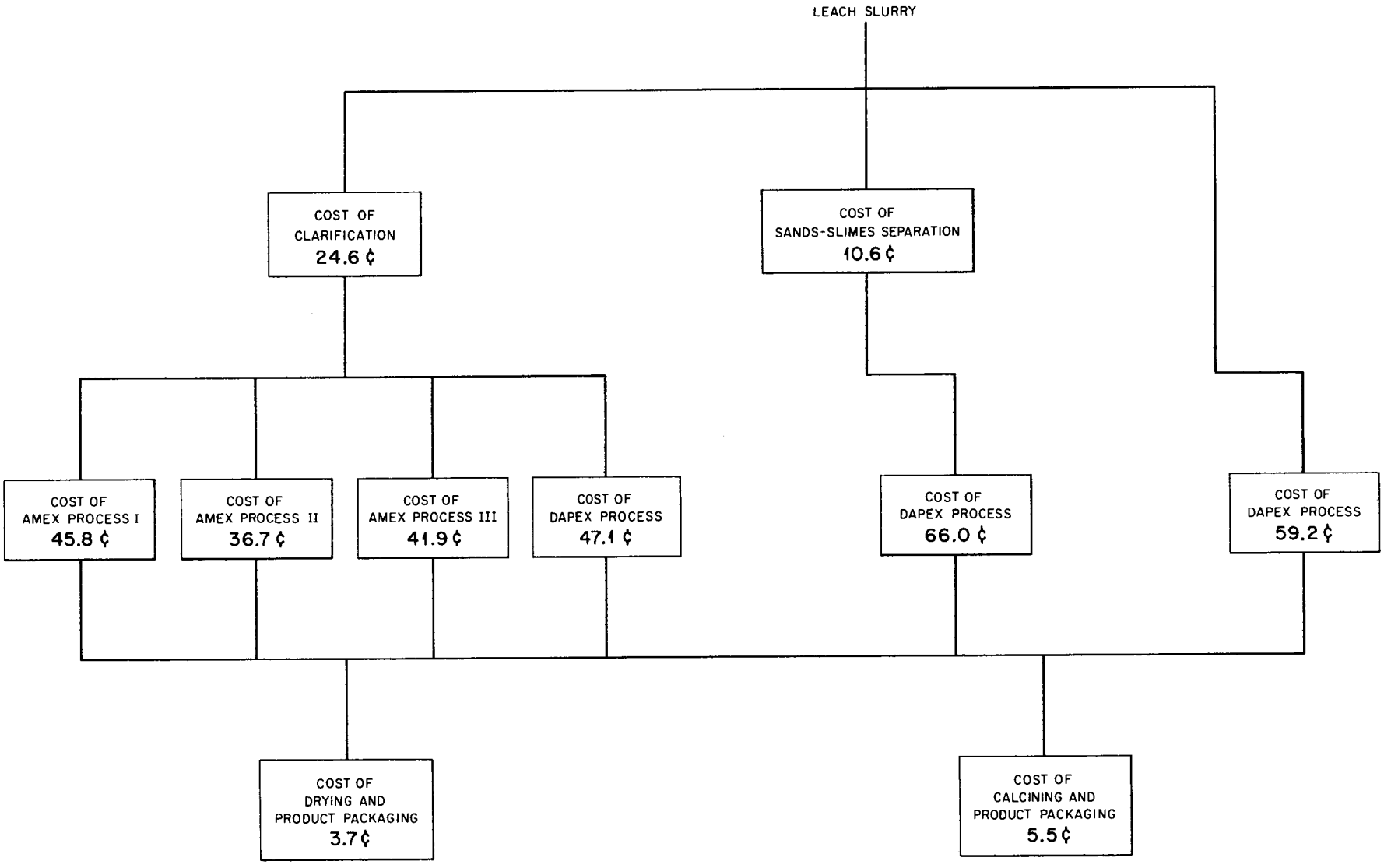

Fig. 2. Cost of Uranium Recovery for Various Processes, per pound of U_3O_8.

(f) The slimes slurry from the sands-slimes separation step is assumed to contain 94.5% of the original uranium in solution.

(g) The clarified liquor is assumed to contain 94% of the original uranium in solution.

(h) The clarified liquor is assumed to be equal in weight to twice the weight of the ore, or 400 tons per day.

(i) All prices are on a "delivered in Grand Junction, Colorado," basis (see Appendix B for a list of the prices used).

(j) A wage rate of $18 per man shift is used, since a breakdown of labor by grade for each processing step is impracticable.

(k) No penalty is assessed for the loss of uranium during processing.

URANIUM RECOVERY FROM CLARIFIED LEACH LIQUOR

Estimates have been made on two processes for the recovery of uranium from clarified leach liquor using an amine (Amex Process)[2,3,4,5,6] or a di(alkyl)phosphoric acid (Dapex Process)[5,6,7,8] as the extractant.

AMEX PROCESS

In the Amex process the clarified liquor is passed countercurrent to the organic phase (kerosene solution of the amine), which extracts essentially all of the uranium. The organic extract is then contacted countercurrently with an aqueous solution of a stripping agent to transfer, or strip, the uranium from the organic to the aqueous phase. Either sodium carbonate, or, if there is no molybdenum* in the liquor, sodium chloride will work satisfactorily as stripping

*Molybdenum is present in at least small amounts in most Colorado Plateau ores and in appreciable amounts in a few of them.

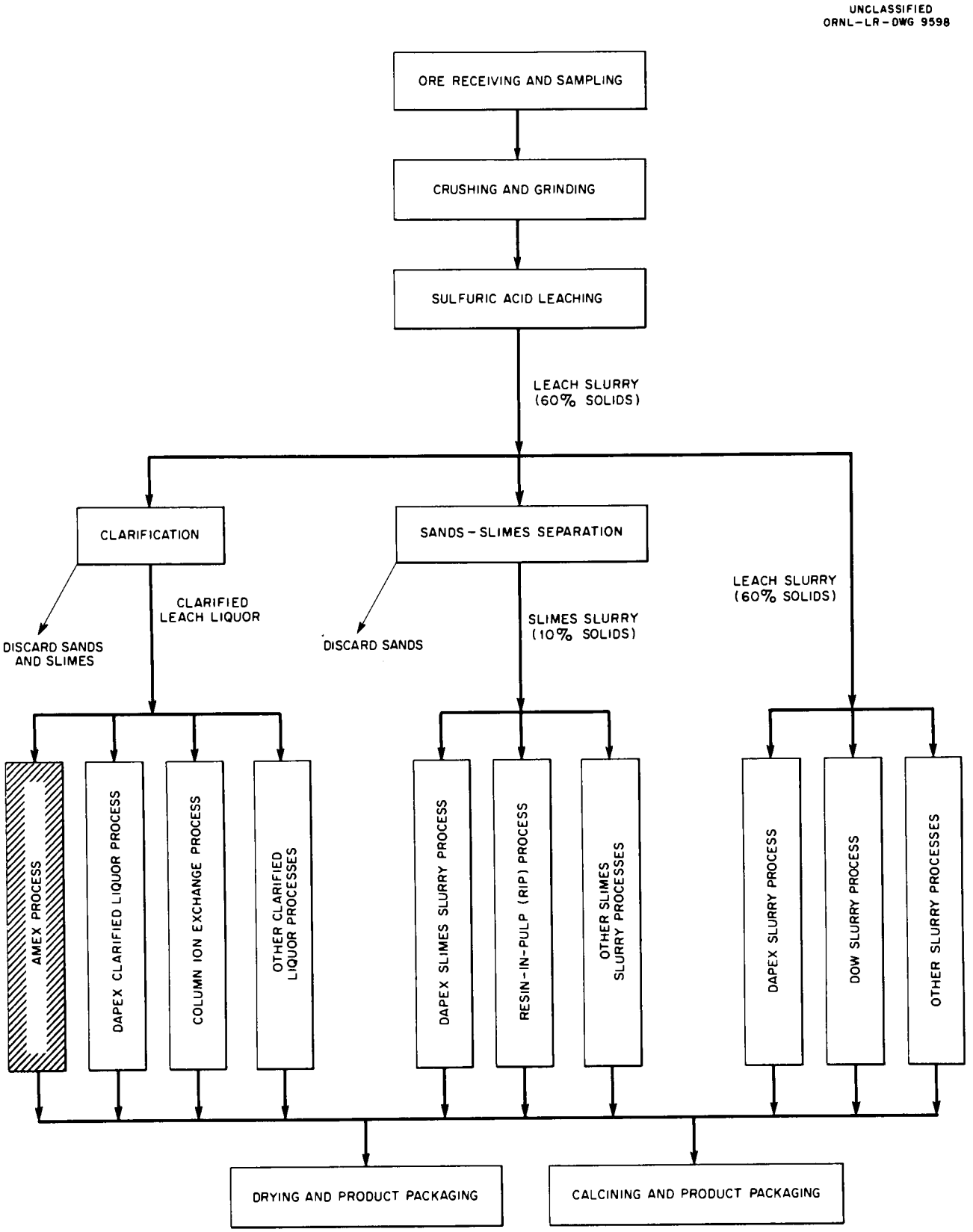

Fig. 3. Relationship between Amex Process and Other Processes.

agents. Molybdenum is readily extracted by the amine and stripped from the organic phase by sodium carbonate but not by sodium chloride. Therefore, if a sodium chloride strip is used when processing head liquors that contain a relatively high concentration of molybdenum, a secondary, alkaline (sodium carbonate), stripping operation is necessary in order to prevent a buildup of molybdenum in the organic phase to the detriment of the uranium extraction efficiency. This process would permit recovery of the molybdenum as a secondary product. These process variations have been extensively tested in the laboratory and in the process test facility during the past year and the operating conditions and scale-up factors have been closely defined at flow rates up to 5 gpm with simulated leach liquor. In order to compare the costs using the different stripping agents, three estimates were made. The details of each of these are given in estimates 1, 2, and 3.

The relationship between the Amex and other processes is given in Fig. 3.

Amex Process I (Cost Estimate No. 1)

The Amex Process I estimate was made to determine the cost of uranium recovery by solvent extraction using amines in conjunction with a sodium carbonate strip and is based on process testing data available prior to March, 1955.

The process is shown in Figs. 4 and 5. It should be noted that the extraction is identical with that for Amex II and III, only the precipitation and stripping are different. Liquor leaving the clarification system is stored in head tanks (T-1, Fig. 4) so that analyses of the liquor can be made prior to its use. The uranium concentration and flow rate of the liquor determine the flow rates of the organic phase and stripping solutions. The clarified liquor is pumped from the head tanks (T-1) through four mixer-settlers (T-2 and T-3) countercurrent to the organic phase* which extracts essentially all of the uranium. The raffinate flows to a final settler tank (T-4) to provide sufficient settling time to recover most of the organic entrainment before discarding the raffinate. The organic extract flows from the extraction section into a holdup tank (T-8) from which it is pumped to the stripping operation.

*Rohm and Haas secondary amine 9D-178 in kerosene is assumed here for cost figures.

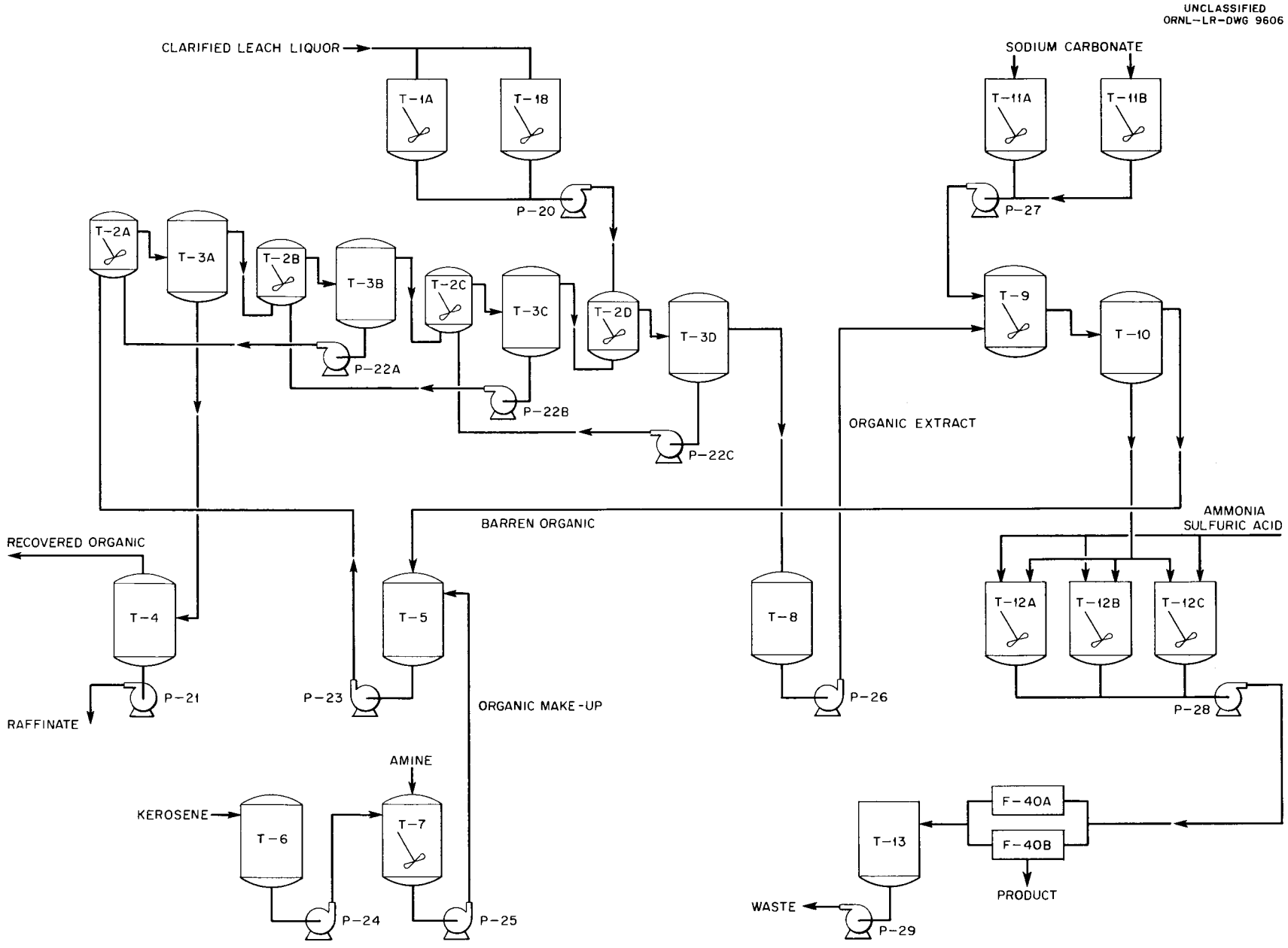

Fig. 4. Amex Process, I, Process and Equipment Flow Diagram.

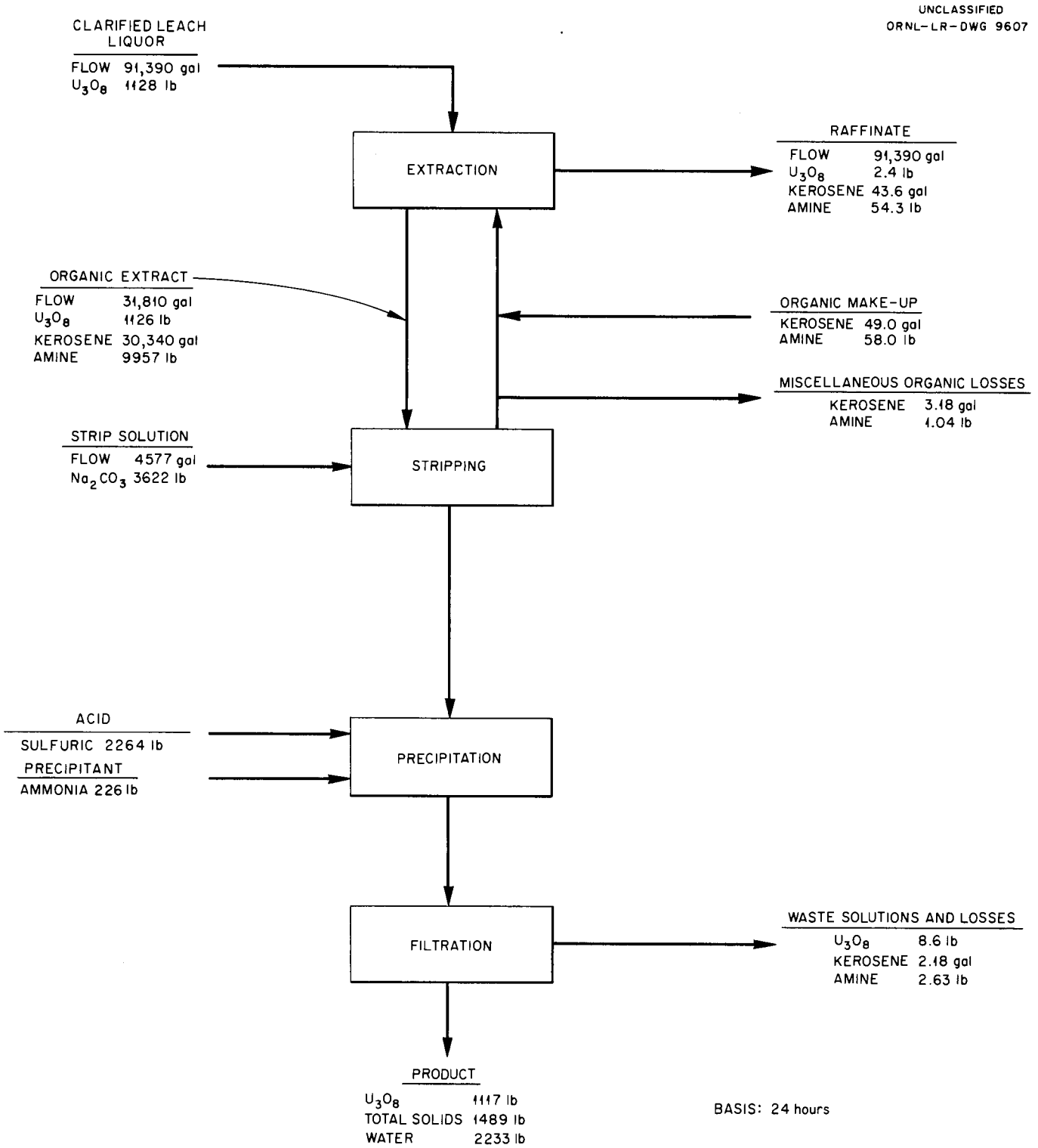

Fig. 5. Amex Process, I, Materials Flow Diagram.

TABLE 2. COST OF AMEX PROCESS, I

	Cost Per Day	Cost Per Pound of U_3O_8
Labor		
Operating 1/	$162.00	$0.145
Maintenance 2/	20.94	0.019
Supplies		
Operating 3/	183.04	0.164
Maintenance 4/	26.18	0.023
Utilities		
Steam	9.26	0.008
Electricity	5.54	0.005
Total Operating Cost	$406.96	$0.364
Amortization 5/	104.72	0.094
Total	$511.68	$0.458

1/ Three men per shift.

2/ Four percent of the total construction cost per 360-day year (see Table 3).

3/ See Table 4.

4/ Five percent of the total construction cost per 360-day year (see Table 3).

5/ Twenty percent of the total construction cost per 360-day year (see Table 3).

TABLE 3. COST OF AMEX PROCESS FACILITY, I

A.	Cost of installed process equipment 1/	$ 71,370
B.	Other Direct Costs	
	Process Piping (30% of A)	21,411
	Instrumentation (3% of A)	2,141
	Electrical Wiring 2/	3,700
	Building (68,640 cu ft) 3/	38,000
	Footings and Foundations (5% of A)	3,568
	Painting and scaffolding (2% of A)	1,427
C.	Total Direct Costs	$141,617
D.	Engineering and Field Expense (10% of C)	14,162
E.	Contingency [10% of (C+D)]	15,578
F.	Contractor's Fee and Overhead [10% of (C+D+E)]	17,136
G.	Total Construction Cost	$188,493

1/ Includes material, labor and freight (see Table 5).

2/ Includes lighting, equipment and instrumentation.

3/ Does not include lighting or sanitary facilities.

TABLE 4. COST OF OPERATING SUPPLIES, AMEX PROCESS, I

Chemical	Consumption Per Day	Cost Per Day	Cost Per Pound of U_3O_8
Kerosene	49.0 gal	$ 6.86	$0.006
Amine	58.0 lb	49.30	0.044
Ammonia, anhydrous	226 lb	13.00	0.012
Sodium Carbonate	3622 lb	81.50	0.073
Sulfuric Acid (66° Be)	2264 lb	32.38	0.029
Total		$183.04	$0.164

TABLE 5. INSTALLED PROCESS EQUIPMENT COSTS, AMEX PROCESS, I

Item No.	No. Req'd*	Description	Installed Equipment Cost
T-1	2	Leach Liquor Feed Storage Tanks, 100,000 gal, wood, 25 hp agitator	$24,390
T-2	4	Extractor Mixer Tank, 150 gal, stainless steel, 1 hp agitator	8,600
T-3	4	Extractor Settler Tank, 200 gal, stainless steel	4,400
T-4	1	Entrainment Separator, 650 gal, stainless steel	2,200
T-5	1	Organic Storage Tank, 1000 gal, steel	320
T-6	1	Kerosene Storage Tank, 1500 gal, steel	440
T-7	1	Organic make-up tank, 100 gal, steel, 1/2 hp agitator	570
T-8	1	Organic Extract Head Tank, 225 gal, stainless steel	1,170
T-9	1	Stripper Mixer, 50 gal, stainless steel, 1/2 hp agitator	930
T-10	1	Stripper Settler, 100 gal, stainless steel	480
T-11	2	Strip Solution Make-up Tank, 2500 gal, steel, 3 hp agitator	2,980
T-12	3	Precipitation Tank, 2000 gal, wood, 3 hp agitator	3,870
T-13	1	Filtrate Head Tank, 2000 gal, wood	430
P-20	2	Leach Liquor Feed Pump, stainless steel, centrifugal	1,860
P-21	1	Extractor Raffinate Pump, identical with P-20	930
P-22	5	Extractor Transfer Pumps, identical with P-20	4,650
P-23	2	Organic Feed Pump, steel, centrifugal	1,040
P-24	1	Kerosene Transfer Pump, steel, centrifugal	470
P-25	1	Organic Make-up Pump, steel, centrifugal	470
P-26	2	Organic Extract Pump, stainless steel, centrifugal	1,700
P-27	2	Strip Solution Feed Pump, steel, centrifugal	520
P-28	1	Filter Feed Pump, neoprene lined diaphragm	900
P-29	1	Filtrate Pump, steel, centrifugal	470
F-40	2	Filter Press, 480 sq ft, wood plates and frames	7,580
		Total	$71,370

*Includes spares where necessary.

TABLE 6. CRITERIA, AMEX PROCESS, I

General	
Feed to Extractor	Clarified leach liquor
U_3O_8 in Clarified Leach Liquor 1/	94.0% of U_3O_8 in the ore
Extraction	
Extractant	Rohm and Haas Amine 9D-178
Concentration	0.1 molar
Diluent	kerosene
Loading of Organic Extract	4.24 grams U_3O_8 per liter
Type of Extractor	4-stage mixer-settler
Residence Time in Mixer	1.5 minutes
Residence Time in Settler	2 minutes
Residence Time in Entrainment Separator	10 minutes
Stripping	
Theoretical CO3 Requirement	3 moles CO_3 per mole of uranium plus 0.5 moles CO_3 per mole of amine
Actual CO_3 Used	135% of theoretical requirement
Type of Contactor	cocurrent mixer-settler
Residence Time in Mixer	2 minutes
Residence Time in Settler	2 minutes
Power Consumption in Mixer	0.0054 hp per gal
Concentration of U_3O_8 in Effluent	29.5 grams U_3O_8 per liter
Organic Phase Losses	
Entrainment	0.05% by volume of aqueous stream (5 times pilot plant results)
Solubility of Amine in Aqueous Stream	50 ppm
Miscellaneous (Spills, etc.)	100 gal/month (assumed)

The organic extract flows through the stripping section (T-9 and T-10) cocurrent with the aqueous sodium carbonate strip solution (from T-11). The organic phase is stripped of its uranium content and the barren organic flows by gravity to the storage tank (T-5) for re-use. The uranium loaded strip solution flows to the precipitation tanks (T-12) where sulfuric acid is added to destroy the carbonate and then ammonia is added to precipitate the uranium. At the end of precipitation, the slurry is filtered (F-40) and the filtrate and wash water are discarded.

It is estimated that the Amex I facility would cost $188,493 and that the total of direct operating costs plus amortization would be $0.458 per pound of U_3O_8 produced. These costs are shown in Tables 2 and 3. The cost of the operating supplies are shown in Table 4; the cost of installed process equipment in Table 5; and the criteria in Table 6.

Amex Process II (Cost Estimate No. 2)

The Amex Process II estimate was made to determine the cost of uranium recovery by solvent extraction using amines in conjunction with a sodium chloride strip and is based upon process testing data available prior to September, 1955.

The process is shown in Figs. 6 and 7. It should be noted that the extraction is identical with that for Amex I and III only the stripping and precipitation are different. Liquor leaving the clarification system is stored in head tanks (T-1, Fig. 6) so that analyses of the liquor can be made prior to its use. The uranium concentration and flow rate of the liquor determine the flow rates of organic phase and stripping solutions. The clarified liquor is pumped from the head tanks (T-1) through four mixer-settlers (T-2 and T-3) countercurrent to the organic phase* which extracts essentially all of the uranium. The raffinate flows to a final settler tank (T-4) to provide sufficient settling time to recover most of the organic entrainment before discarding the raffinate. The organic extract flows from the extraction section into a holdup tank (T-8) from which it is pumped to the stripping operation.

The organic extract flows through the stripping section (T-9 and T-10) countercurrent to the aqueous sodium chloride strip solution (from T-11). The organic phase is stripped of

*Rohm and Haas secondary amine 9D-178 in kerosene is assumed here for cost figures.

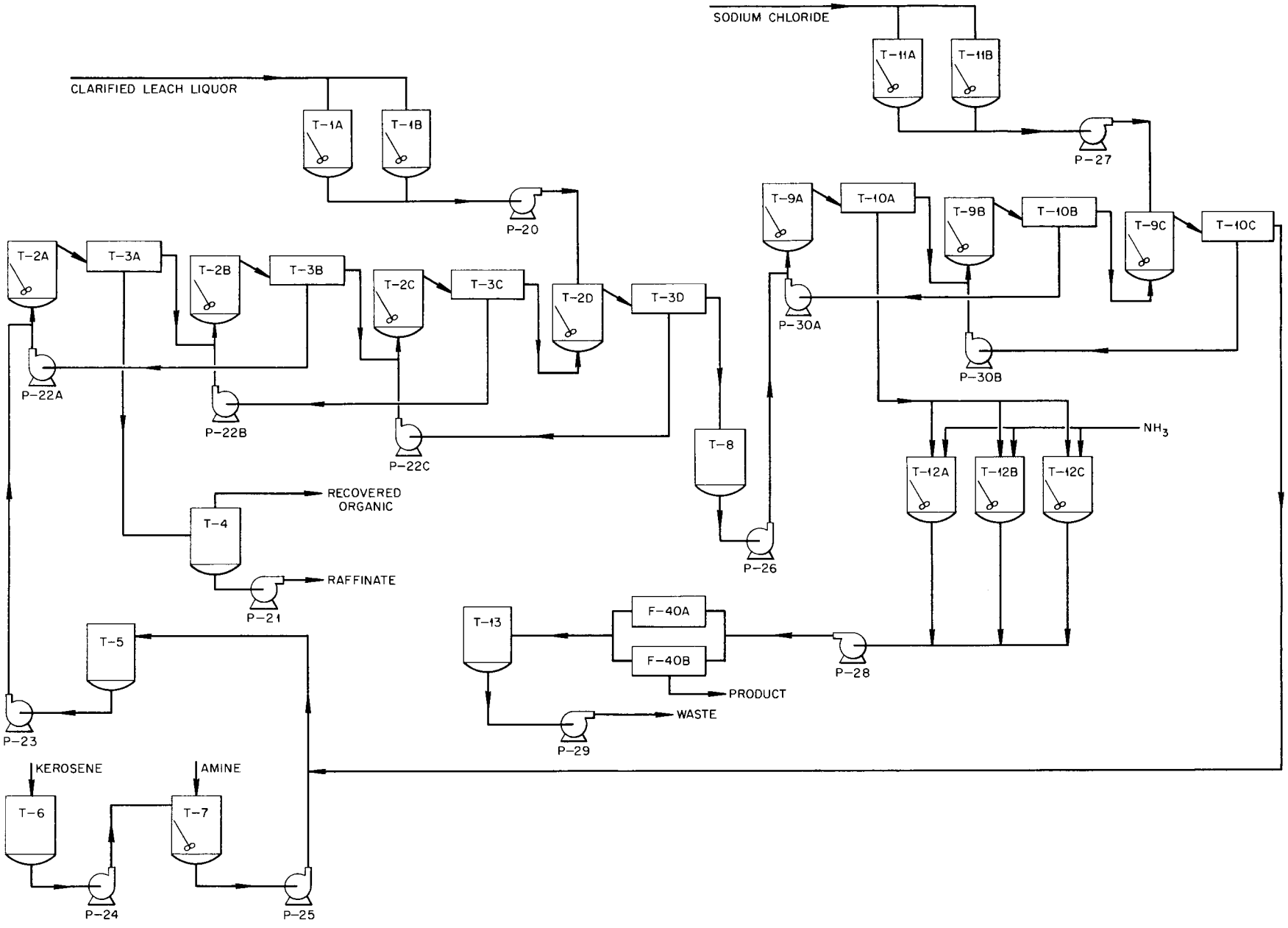

Fig. 6. Amex Process, II, Process and Equipment Flow Diagram.

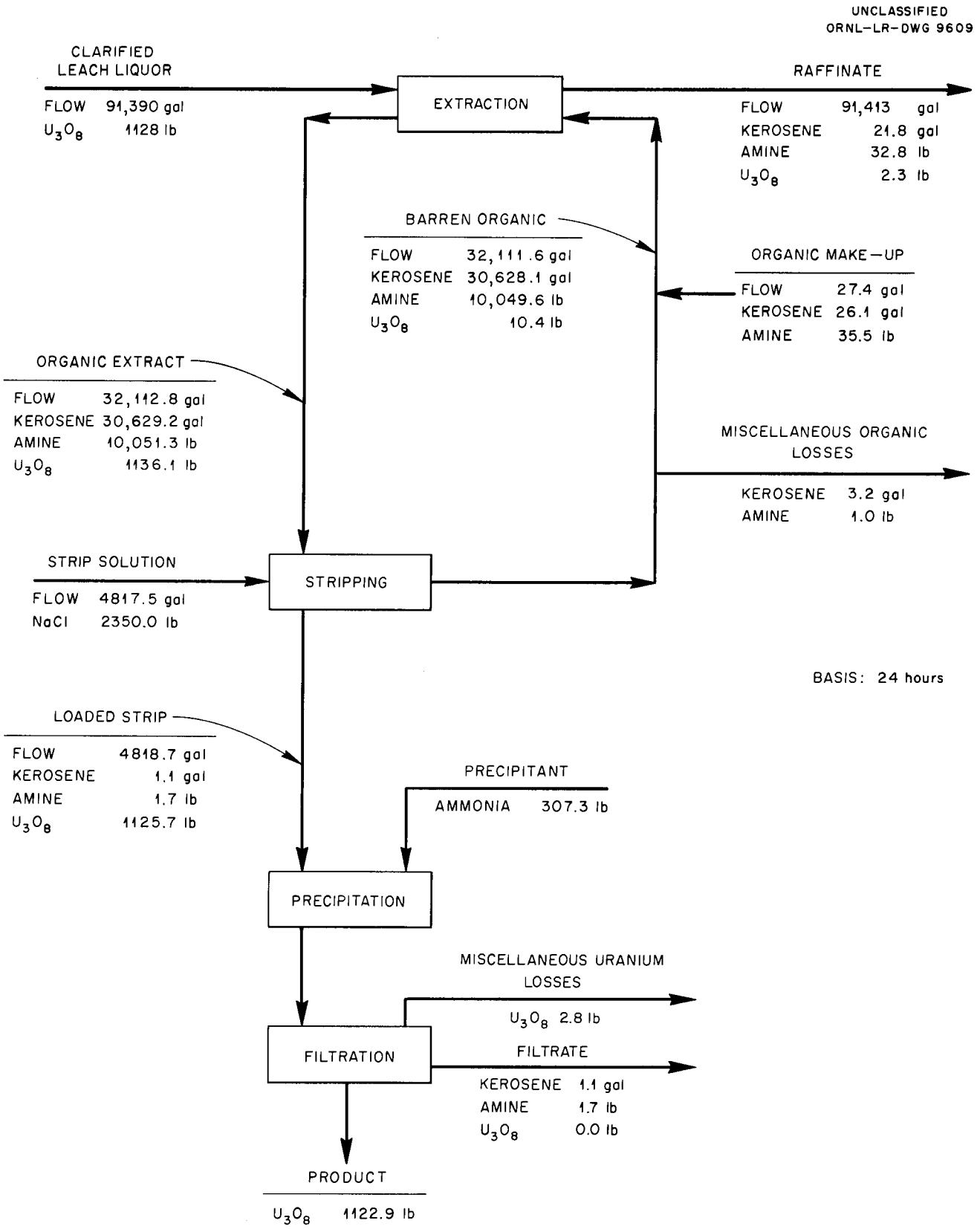

Fig. 7. Amex Process, II, Materials Flow Diagram

TABLE 7. COST OF AMEX PROCESS, II

	Cost Per Day	Cost Per Pound of U_3O_8
Labor		
Operating 1/	$162.00	$0.144
Maintenance 2/	22.62	0.020
Supplies		
Operating 3/	69.12	0.061
Maintenance 4/	28.28	0.026
Utilities		
Steam	9.26	0.008
Electricity	7.77	0.007
Total Operating Cost	$299.05	$0.266
Amortization 5/	113.12	0.101
Total	$412.17	$0.367

1/ Three men per shift.

2/ Four percent of the total construction cost per 360-day year (see Table 8).

3/ See Table 9.

4/ Five percent of the total construction cost per 360-day year (see Table 8).

5/ Twenty percent of the total construction cost per 360-day year (see Table 8).

TABLE 8. COST OF AMEX PROCESS FACILITY, II

A.	Cost of Installed Process Equipment 1/	$ 78,815
B.	Other Direct Costs	
	Process Piping (30% of A)	23,645
	Instrumentation (3% of A)	2,364
	Electrical Wiring 2/	3,640
	Building (68,640 cu ft) 3/	39,000
	Footings and Foundations (5% of A)	3,941
	Painting and Scaffolding (2% of A)	1,576
C.	Total Direct Costs	$152,981
D.	Engineering and Field Expense (10% of C)	15,298
E.	Contingency [10% of (C+D)]	16,828
F.	Contractor's Fee and Overhead [10% of (C+D+E)]	18,511
G.	Total Construction Cost	$203,618

1/ Includes materials, labor, and freight (see Table 10).

2/ Includes lighting, equipment, and instrumentation.

3/ Does not include lighting and sanitary facilities.

TABLE 9. COST OF OPERATING SUPPLIES, AMEX PROCESS, II

Chemical	Consumption Per Day	Cost Per Day	Cost Per Pound of U_3O_8
Kerosene	26.1 gal	$ 3.65	$0.003
Amine	35.5 lb	30.18	0.026
Sodium Chloride	2,350.0 lb	17.62	0.016
Ammonia, anhydrous	307.3 lb	17.67	0.016
Total		$69.12	$0.061

TABLE 10. INSTALLED PROCESS EQUIPMENT COSTS, AMEX PROCESS, II

Item No.	No. Req'd*	Description	Installed Equipment Cost
T-1	2	Leach Liquor Feed Storage Tank, 100,000 gal, wood, 25 hp agitator	$24,390
T-2	4	Mixer Tank-Extractor, 34 gal, Haveg 41, 1/4 hp agitator	4,360
T-3	4	Settler Tank-Extractor, 344 gal, Haveg 41	4,000
T-4	1	Entrainment Separator, 559 gal, Haveg 41	1,145
T-5	1	Organic Storage, 1,832 gal, Haveg 41	2,775
T-6	1	Kerosene Storage, 1,500 gal, steel	440
T-7	1	Organic Make-up, 100 gal, steel, 1/2 hp agitator	570
T-8	1	Organic Extract Head Tank, 225 gal, Haveg 41	800
T-9	3	Mix Tanks - Stripper, 34 gal, Haveg 41, 1/4 hp agitator	3,270
T-10	3	Settler Tank - Stripper, 344 gal, Haveg 41	3,000
T-11	2	NaCl Strip Make-up, 2,450 gal, Neop. lined, 3 hp agitator	5,380
T-12	3	Precipitation Tank, 2,000 gal, wood, 3 hp agitator	3,870
T-13	1	Filtrate Head Tank, 2,000 gal, wood	430
P-20	1	Leach Liquor Feed Pump, 75 gpm, stainless steel	930
P-21	2	Extractor Raffinate Pump, 75 gpm, rubber lined	2,110
P-22	5	Extractor Interstage Pump, 75 gpm, stainless steel	4,650
P-23	2	Organic Feed Pump, 30 gpm, rubber lined	1,900
P-24	1	Kerosene Transfer Pump, 20 gpm, mild steel	470
P-25	1	Organic Make-up Pump, 20 gpm, mild steel	470
P-26	2	Organic Extract Pump, 30 gpm, stainless steel	1,700
P-27	2	Strip Solution Feed Pump, 5 gpm, Hastelloy	1,070
P-28	1	Filter Feed Pump, 30 gpm, rubber lined	950
P-29	1	Filtrate Pump, 30 gpm, rubber lined	950
P-30	3	Strip Interstage Pump, 5 gpm, Hastelloy	1,605
F-40	2	Filter Press, 480 sq ft, wood	7,580
		Total	$78,815

*Includes spares where necessary.

TABLE 11. CRITERIA, AMEX PROCESS, II

General	
Feed to Extractor	clarified leach liquor
U_3O_8 in Clarified Leach Liquor 1/	94.0% of U_3O_8 in the ore
Unaccountable Loss of U_3O_8 1/	0.25% of U_3O_8 in leach liquor
Extraction	
Organic Extractant	Rohm and Haas Amine 9D-178
Organic Diluent	kerosene
Concentration Amine in Diluent	0.1 molar
Loading of Organic Extract	4.24 gms U_3O_8 per liter
Type of Extractor	4-stage mixer-settler
Residence Time in Mixer 2/	0.33 minutes
Residence Time in Settler 2/	3.65 minutes
Residence Time in Entrainment Separator	8 minutes
Stripping	
Stripping Agent	sodium chloride
Concentration of Sodium Chloride	1 molar
Theoretical Stripping Requirement	1 mole NaCl per mole amine
Actual Strip Usage	150% of theoretical requirement
Type of Stripper	3-stage mixer-settler
Residence Time in Mixer 2/.	1.2 minutes
Residence Time in Settler 3/	12.4 minutes
Precipitation	
Precipitant	anhydrous ammonia
Theoretical Requirement . .	3 moles ammonia per mole uranium
Actual Precipitant Usage .	150% of theoretical requirement
Rate of Loss of Organic Phase	
Entrainment	0.25 ml organic per liter aqueous
Solubility of Amine in Aqueous	32 ppm
Miscellaneous Losses (spills, etc.)	100 gallons per month
Uranium Losses and Recycle	
Organic Recycle NaCl Strip.	0.039 g U_3O_8 per liter
Uranium Loss to Raffinate .	0.003 g U_3O_8 per liter
Uranium Loss to Filtrate. .	0.001 g U_3O_8 per liter

1/ Section standard.
2/ The two types of mixers are the same size and configuration.
3/ The two types of settlers are the same size and configuration.

its uranium content and the barren organic flows by gravity to the storage tank (T-5) for re-use. The uranium loaded strip solution flows to the precipitation tanks (T-12) where ammonia is added to precipitate the uranium. At the end of precipitation, the slurry is filtered (F-40) and the filtrate and wash water are discarded.

It is estimated that the Amex Process II facility would cost $203,618 and that the total of direct operating costs plus amortization would be $0.367 per lb of U_3O_8 produced. These costs are shown in Tables 7 and 8. The cost of the operating supplies are shown in Table 9, the cost of installed process equipment in Table 10, and the criteria in Table 11.

Amex Process III (Cost Estimate No. 3)

The Amex Process III estimate was made to determine the cost of uranium recovery by solvent extraction using amines in conjunction with a sodium chloride strip followed by a sodium carbonate secondary strip and is based upon process testing data available prior to September, 1955.

The process is shown in Figs. 8 and 9. It should be noted that the extraction is identical with that of Amex I and II; only the stripping and precipitation are different. Liquor leaving the clarification system is stored in head tanks (T-1, Fig. 8) so that analyses of the liquor can be made prior to its use. The uranium concentration and flow rate of the liquor determine the flow rates of organic phase and stripping solutions. The clarified liquor is pumped from the head tanks (T-1) through four mixer-settlers (T-2 and T-3) countercurrent to the organic phase* which extracts essentially all of the uranium. The raffinate flows to a final settler tank (T-4) to provide sufficient settling time to recover most of the organic entrainment before discarding the raffinate. The organic extract flows from the extraction section into a holdup tank (T-8) from which it is pumped to the stripping operation.

The organic extract flows through the stripping section (T-9 and T-10) countercurrent to the aqueous sodium chloride strip solution (from T-11). The organic phase is stripped of its uranium content and the barren organic flows by gravity to the storage tank (T-15). The organic phase is given a secondary strip by contacting it with a sodium carbonate solution in a single mixer-settler (T-16 and T-17). The aqueous phase is discarded and the organic phase flows by gravity to the storage tank T-5 for re-use. The uranium loaded primary

*Rohm and Haas secondary amine 9D-178 in kerosene is assumed here for cost figures.

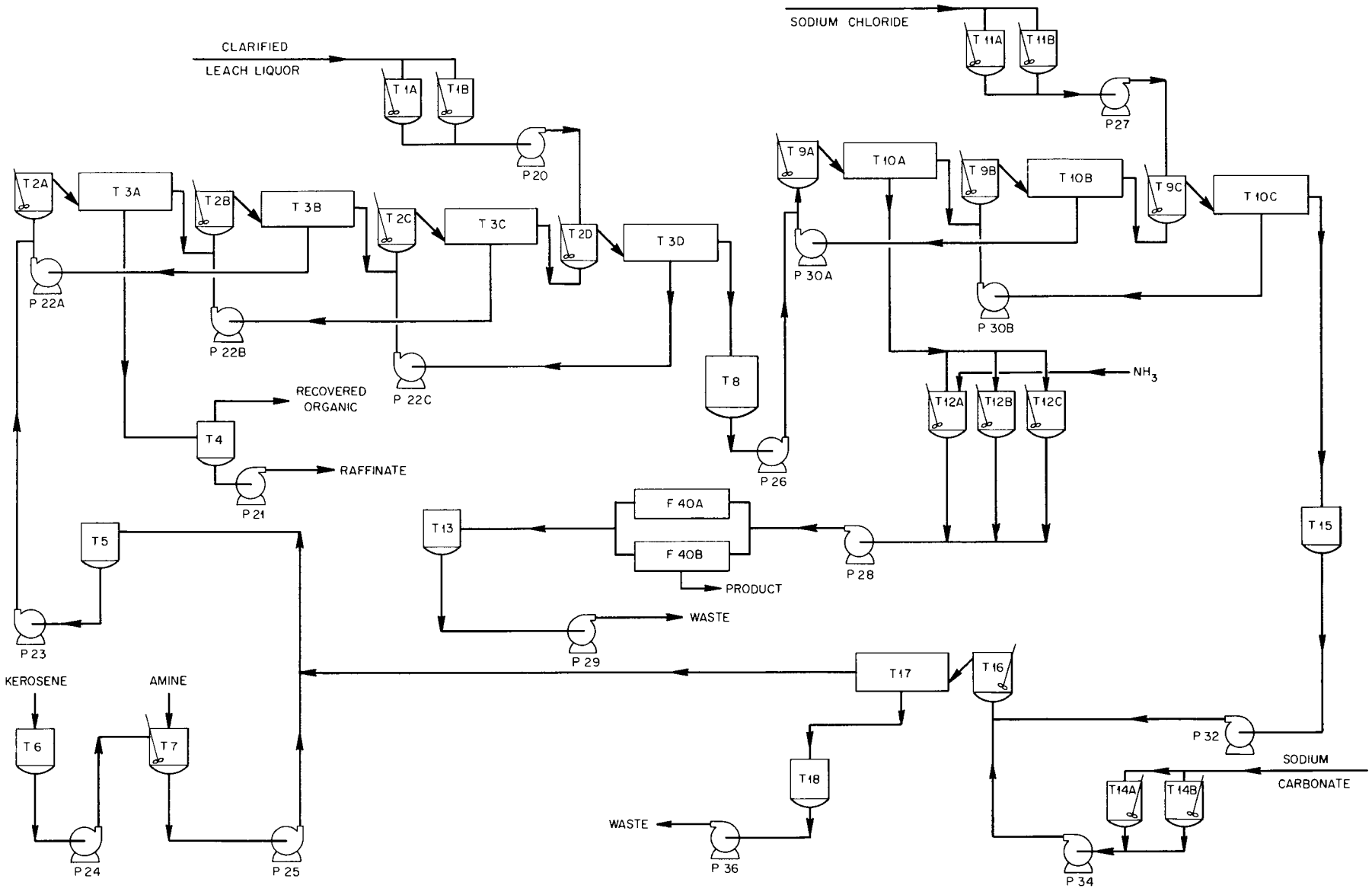

Fig. 8. Amex Process, III, Process and Equipment Flow Diagram.

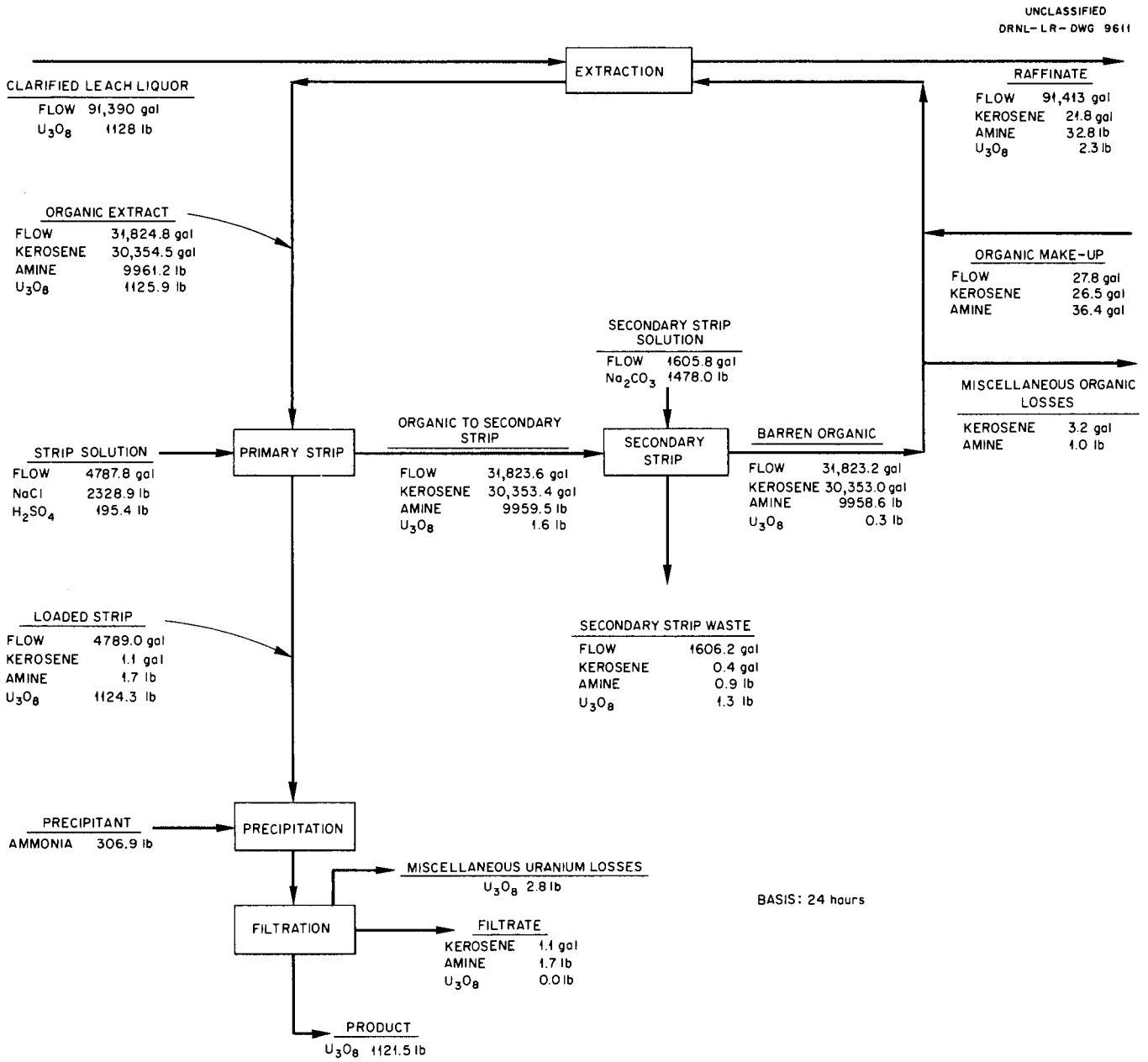

Fig. 9. Amex Process, III, Materials Flow Diagram.

TABLE 12. COST OF AMEX PROCESS, III

	Cost Per Day	Cost Per Pound of U_3O_8
Labor		
Operating 1/	$162.00	$0.144
Maintenance 2/	25.38	0.023
Supplies		
Operating 3/	105.95	0.095
Maintenance 4/	31.72	0.028
Utilities		
Steam	9.26	0.008
Electricity	8.39	0.008
Total Operating Costs	$342.70	$0.306
Amortization 5/	126.90	0.113
Total	$469.60	$0.419

1/ Three men per shift.

2/ Four percent of the total construction cost per 360-day year (see Table 13).

3/ See Table 14.

4/ Five percent of the total construction cost per 360-day year (see Table 13).

5/ Twenty percent of the total construction cost per 360-day year (see Table 13).

TABLE 13. COST OF AMEX PROCESS FACILITY, III

A.	Cost of Installed Process Equipment 1/	$ 90,415
B.	Other Direct Costs	
	Process Piping (30% of A)	27,125
	Instrumentation (3% of A)	2,712
	Electrical Wiring 2/	4,030
	Building (73,040 cu ft) 3/	41,000
	Footings and Foundations (5% of A)	4,521
	Painting and Scaffolding (2% of A)	1,808
C.	Total Direct Costs	$171,611
D.	Engineering and Field Expense (10% of C)	17,161
E.	Contingency [10% of (C+D)]	18,877
F.	Contractor's Fee and Overhead [10% of (C+D+E)]	20,765
G.	Total Construction Cost	$228,414

1/ Includes materials, labor, and freight (see Table 15).

2/ Includes lighting, equipment, and instrumentation.

3/ Does not include lighting and sanitary facilities.

TABLE 14. COST OF OPERATING SUPPLIES,

AMEX PROCESS, III

Chemical	Consumption Per Day	Cost Per Day	Cost Per Pound of U_3O_8
Kerosene	26.5 gals	$ 3.71	$0.003
Amine	36.4 lbs	30.94	0.028
Sodium Chloride	2,328.9 lbs	17.47	0.016
Sulfuric Acid	195.4 lbs	2.93	0.002
Sodium Carbonate	1,478.0 lbs	33.25	0.030
Ammonia, anhydrous	306.9 lbs	17.65	0.016
Total		$105.95	$0.095

TABLE 15. INSTALLED PROCESS EQUIPMENT COSTS, AMEX PROCESS, III

Item No.	No. Req'd*	Description	Installed Equipment Cost
T-1	2	Leach Liquor Feed Storage Tank, 100,000 gal, wood, 25 hp agitator	$24,390
T-2	4	Mixer Tank - Extractor, 34 gal, Haveg 41, 1/4 hp agitator	4,360
T-3	4	Settling Tank - Extractor, 344 gal, Haveg 41,	4,000
T-4	1	Entrainment Separator, 559 gal, Haveg 41	1,145
T-5	1	Organic Storage, 2,393 gal, Haveg 41	3,745
T-6	1	Kerosene Storage, 1,500 gal, steel	440
T-7	1	Organic Make-up, 100 gal, steel, 1/2 hp agitator	570
T-8	1	Organic Extract Head Tank, 225 gal, Haveg 41	800
T-9	3	Mixer Tank - Stripper, 34 gal, Haveg 41, 1/4 hp agitator	3,270
T-10	3	Settler Tank - Stripper, 344 gal, Haveg 41	3,000
T-11	2	NaCl Strip Make-up, 2,450 gal, Neo lined, 3 hp agitator	5,380
T-12	3	Precipitation Tank, 2,000 gal, wood, 3 hp agitator	3,870
T-13	1	Filtrate Head Tank, 2,000 gal, wood	430
T-14	2	Na_2CO_3 Strip Make-up, 1,000 gal, rubber lined, 3 hp agitator	4,300
T-15	1	Stripped Organic Holdup, 225 gal, Haveg 41	800
T-16	1	Mix Tank - Secondary Strip, 34 gal, Haveg 41, 1/4 hp agitator	1,090
T-17	1	Settler Tank - Secondary Strip, 344 gal, Haveg 41	1,000
T-18	1	Spent Secondary Strip Receiver, 1,000 gal, rubber lined	980
P-20	1	Leach Liquor Feed Pump, 75 gpm, stainless steel	930
P-21	2	Raffinate Pump, 75 gpm, stainless steel	1,860
P-22	5	Extractor Interstage Pump, 75 gpm, stainless steel	4,650
P-23	2	Organic Feed Pump, 30 gpm, mild steel	1,040
P-24	1	Kerosene Transfer Pump, 20 gpm, mild steel	470
P-25	1	Organic Make-up Pump, 20 gpm, mild steel	470
P-26	2	Organic Extract Pump, 30 gpm, stainless steel	1,700
P-27	2	Strip Solution Feed Pump, 5 gpm, Hastelloy	1,070
P-28	1	Filter Feed Pump, 30 gpm, rubber lined	950
P-29	1	Filtrate Pump, 30 gpm, rubber lined	950
P-30	3	Strip Interstage Pump, 5 gpm, Hastelloy	1,605
P-32	2	Organic to Secondary Strip Pump, 30 gpm, rubber lined	1,900
P-34	2	Sodium Carbonate Feed Pump, 1.6 gpm, rubber	860
P-36	2	Waste Pump, 5 gpm, Hastelloy	810
F-40	2	Filter Press, 480 sq ft, wood	7,580
		Total	$90,415

*Includes spares where necessary.

TABLE 16. CRITERIA, AMEX PROCESS, III

General	
Feed to Extractor	Clarified Leach Liquor
U_3O_8 in Clarified Leach Liquor 1/	94.0% of U_3O_8 in the ore
Unaccountable Loss of U_3O_8 1/	0.25% of U_3O_8 in Leach Liquor
Extraction	
Organic Extractant	Rohm and Haas Amine 9D-178
Organic Diluent	kerosene
Concentration Amine in Diluent	0.1 molar
Loading of Organic Extract	4.24 gms U_3O_8 per liter
Type of Extractor	4-stage mixer-settler
Residence Time in Mixer 2/	0.33 minutes
Residence Time in Settler 3/	3.65 minutes
Residence Time in Entrainment Separator	8 minutes
Stripping, Primary	
Stripping Agent	sodium chloride
Concentration of Sodium Chloride	1 molar
Concentration of Sulfuric Acid	0.05 molar
Theoretical Stripping Requirement	1 mole NaCl per mole amine
Actual Strip Usage	150% of theoretical requirement
Type of Stripper	3-stage mixer-settler
Residence Time in Mixer 2/	1.2 minutes
Residence Time in Settler 3/	12.4 minutes
Strip, Secondary	
Stripping Agent	sodium carbonate
Concentration of Reagent	10% solution
Theoretical Requirement	0.5 moles Na_2CO_3 per mole amine
Actual Usage	105% of theoretical requirement
Type of Stripper	Single-stage mixer-settler
Residence Time in Mixer 2/	1.5 minutes
Residence Time in Settler 3/	14.8 minutes
Precipitation	
Precipitant	anhydrous ammonia
Theoretical Requirement	3 moles ammonia per mole uranium
Actual Precipitant Usage	150% of theoretical requirement

1/ Section standard.
2/ The three types of mixers are the same size and configuration.
3/ The three types of settlers are the same size and configuration.

TABLE 16 (continued)

Rate of Loss of Organic Phase	
Entrainment	0.25 ml organic per liter aqueous
Solubility of Amine in Aqueous.	32 ppm
Miscellaneous Losses (spills, etc.)	100 gallons per month
Uranium Losses and Recycle	
Organic Leaving $NaCl-H_2SO_4$ Strip	0.006 g U_3O_8 per liter
Uranium Loss to Raffinate . . .	0.003 g U_3O_8 per liter
Uranium Loss to Filtrate. . . .	0.001 g U_3O_8 per liter
Organic Recycle Na_2CO_3.	0.001 g U_3O_8 per liter

strip solution flows to the precipitation tanks (T-12) where ammonia is added to precipitate the uranium. At the end of precipitation, the slurry is filtered (F-40) and the filtrate and wash water are discarded.

It is estimated that the Amex Process III facility would cost $228,414 and that the total of direct operating costs plus amortization would be $0.419 per lb of U_3O_8 produced. These costs are shown in Tables 12 and 13. The cost of operating supplies is shown in Table 14, the cost of the installed process equipment in Table 15, and the bases in Table 16.

DAPEX CLARIFIED LIQUOR PROCESS (COST ESTIMATE No. 4)

The Dapex process for the recovery of uranium from clarified sulfuric acid leach liquors by solvent extraction uses specific dialkyl phosphoric acids (dissolved in kerosene) as the uranium extractant. The Dapex process may also be applied to the extraction of uranium from slimes slurries and leach slurries (see Cost Estimates Nos. 5 and 6). Extraction of iron is suppressed by reducing most of it to the ferrous state prior to extraction. For this estimate it has been assumed that this reduction could be accomplished in the last leach tank; therefore, the cost of the reductant has been included but not the cost of the reducing tank.

This estimate is based on laboratory data determined prior to September, 1955, by the Chemistry of Uranium Raw Materials Section of this Division. No process testing studies have been made up to this point. The relationship between the Dapex and other processes is given in Fig. 10.

The process is shown in Figs. 11 and 12. Liquor leaving the clarification system is stored in head tanks (T-1, Fig. 11) so that analyses of the liquor can be made prior to its use. The uranium concentration and flow rate of the liquor determine the flow rates of organic phase and stripping solutions. The clarified liquor is pumped from the head tanks (T-1) through four mixer-settlers (T-2 and T-3) countercurrent to the organic phase* which extracts essentially all of the uranium. The raffinate flows to a final settler tank (T-4) to provide sufficient settling time to recover most of the organic entrainment before discarding the raffinate. The organic extract

*Di(2-ethylhexyl)phosphoric acid (D2EHPA), dissolved in kerosene modified with tributyl phosphate (TBP) assumed for cost figures.

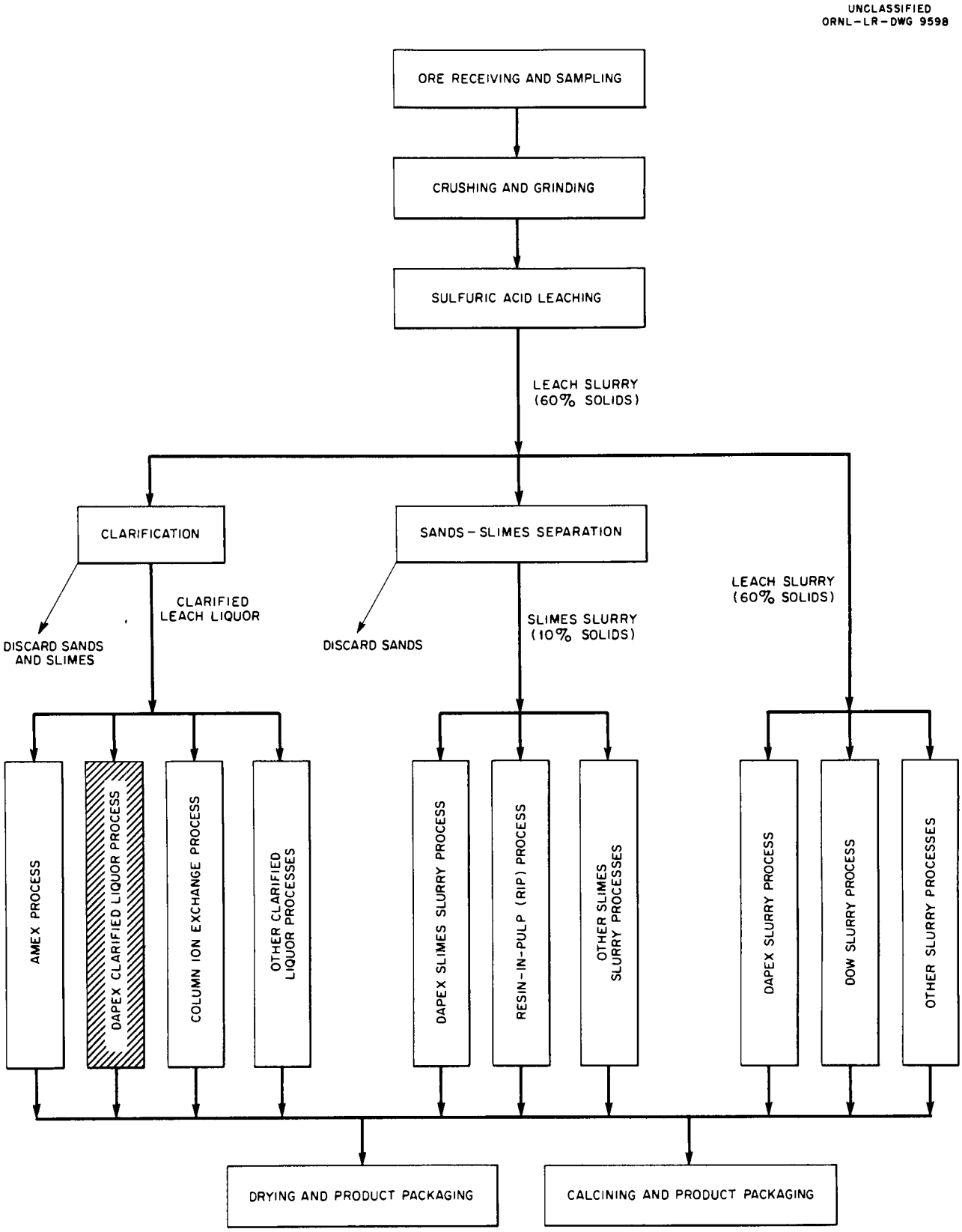

Fig.10. Relationship between Dapex Clarified Liquor Process and Other Processes.

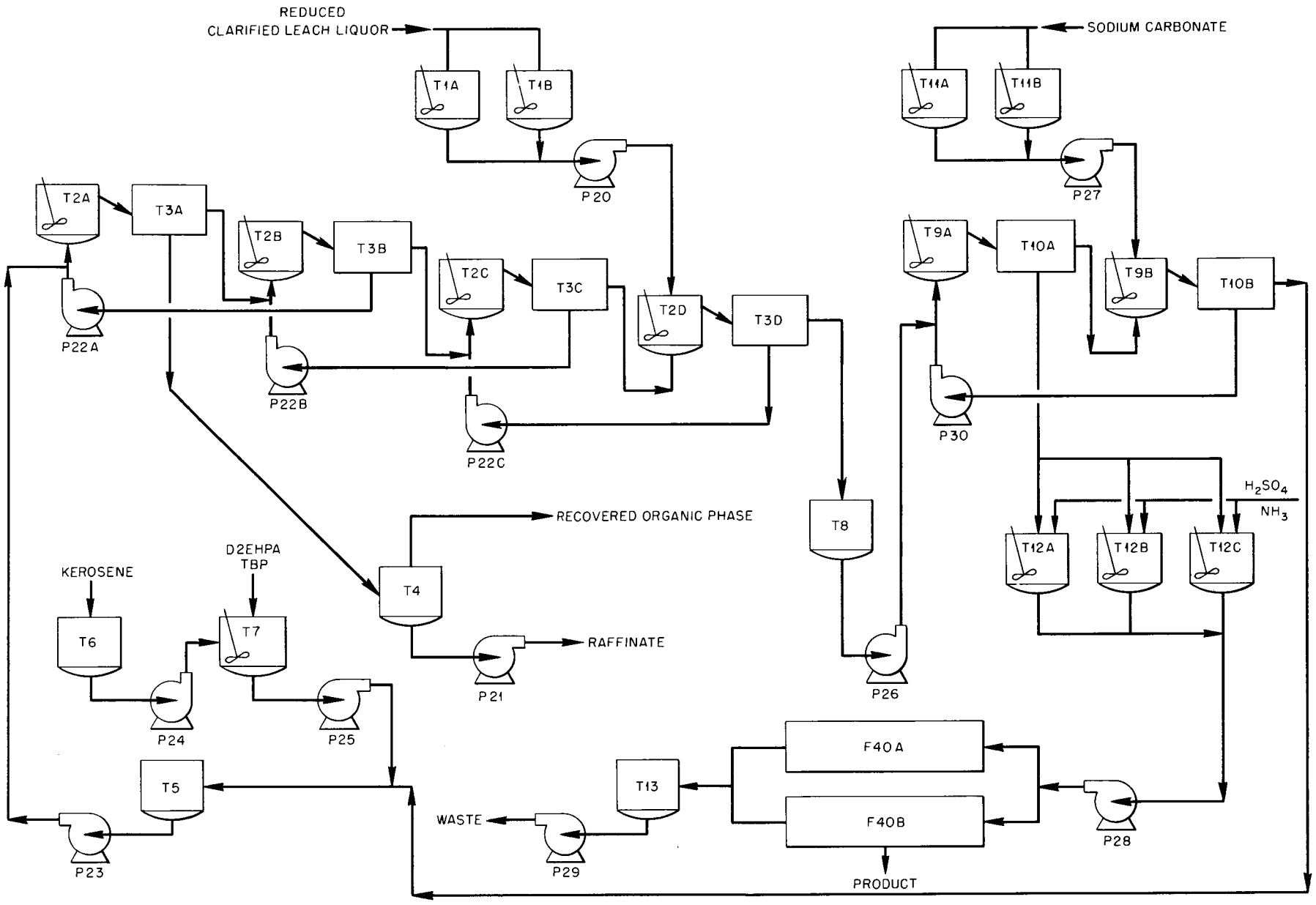

Fig. 11. Dapex Clarified Liquor Process, Process and Equipment Flow Diagram.

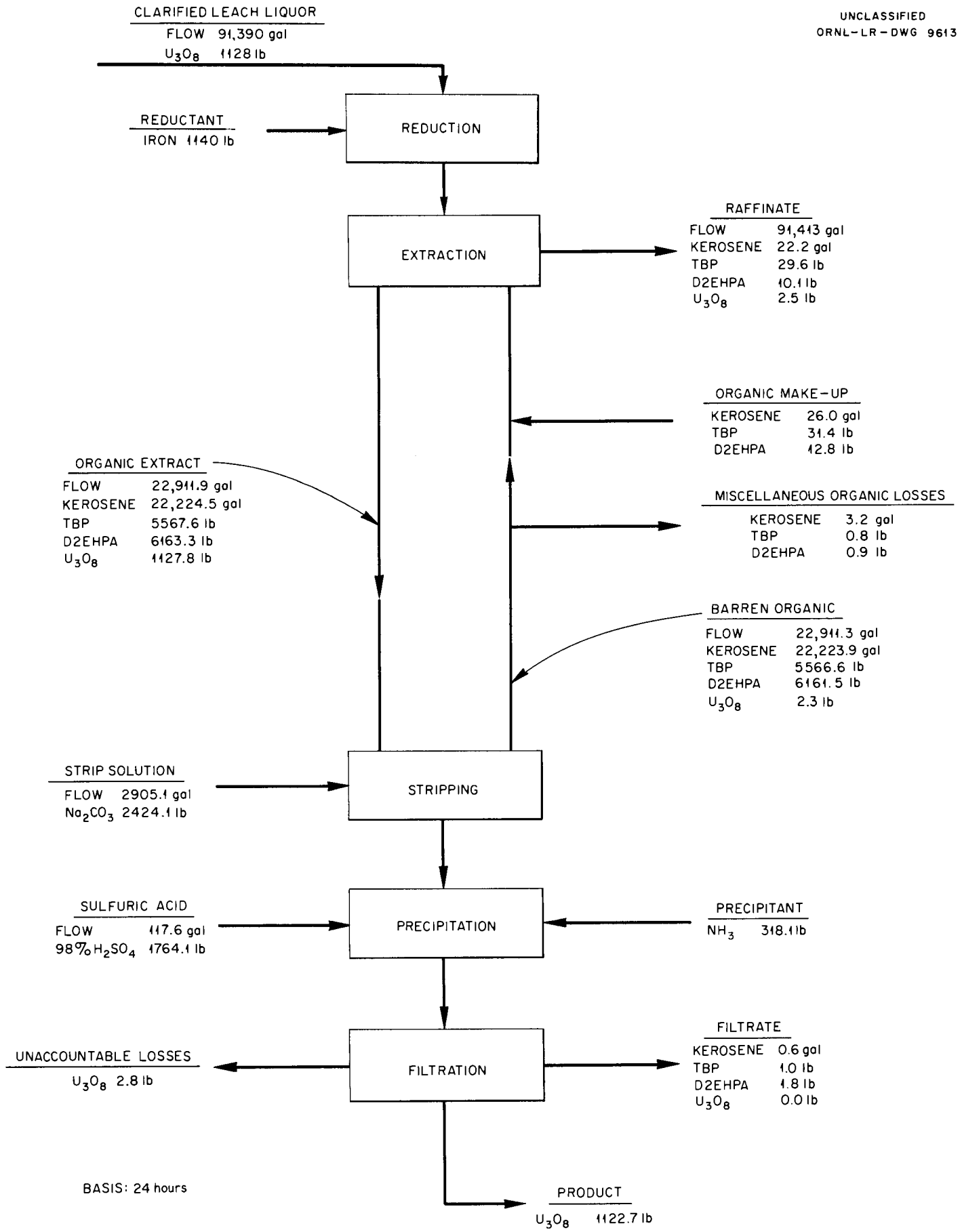

Fig. 12. Dapex Clarified Liquor Process, Materials Flow Diagram.

TABLE 17. COST OF DAPEX CLARIFIED LIQUOR PROCESS

	Cost Per Day	Cost Per Pound of U_3O_8
Labor		
Operating 1/	$162.00	$0.144
Maintenance 2/	21.10	0.019
Supplies		
Operating 3/	202.11	0.180
Maintenance 4/	26.37	0.024
Utilities		
Steam	4.85	0.004
Electricity	7.21	0.006
Total Operating Cost	$423.64	$0.377
Amortization 5/	105.49	0.094
Total	$529.13	$0.471

1/ Three men per shift.

2/ Four percent of total construction cost per 360-day year (see Table 18).

3/ See Table 19.

4/ Five percent of total construction cost per 360-day year (see Table 18).

5/ Twenty percent of total construction cost per 360-day year (see Table 18).

TABLE 18. COST OF DAPEX CLARIFIED LIQUOR PROCESS FACILITY

A.	Cost of Installed Process Equipment 1/	$ 71,500
B.	Other Direct Costs	
	Process Piping (30% of A)	21,450
	Instrumentation (3% of A)	2,145
	Electrical Wiring 2/	3,565
	Manufacturing Buildings (68,640 cu ft) 3/	39,000
	Footings and Foundations (5% of A)	3,575
	Painting and Scaffolding (2% of A)	1,430
C.	Total Direct Costs	$142,665
D.	Engineering and Field Expense (10% of C)	14,267
E.	Contingency [10% of C+D)]	15,693
F.	Contractor's Fee and Overhead [10% of (C+D+E)]	17,263
G.	Total Construction Cost	$189,888

1/ Includes material, labor, and freight (see Table 20).

2/ Includes lighting, equipment, and instrumentation.

3/ Does not include lighting or sanitary facilities.

TABLE 19. COST OF OPERATING SUPPLIES,

DAPEX CLARIFIED LIQUOR PROCESS

Chemical	Consumption Per Day	Cost Per Day	Cost Per Pound of U_3O_8
Kerosene	26 gals	$ 3.64	$0.003
Tributyl Phosphate (TBP)	31.4 lbs	16.64	0.015
Di(2-ethylhexyl)phosphoric Acid (D2EHPA)	12.8 lbs	7.87	0.007
Iron	1140 lbs	74.67	0.066
Sodium Carbonate	2424 lbs	54.54	0 049
Sulfuric Acid (98%)	1764 lbs	26.46	0.024
Ammonia, anhydrous	318 lbs	18.29	0.016
Total		$202.11	$0.180

TABLE 20. INSTALLED PROCESS EQUIPMENT COSTS, DAPEX CLARIFIED LIQUOR PROCESS

Item No.	No. Req'd*	Description	Installed Equipment Cost
T-1	2	Leach Liquor Feed Storage Tank, 100,000 gal, wood, 25 hp agitator	$24,390
T-2	4	Extractor Mixer, 211 gal, Haveg 41, 1 hp agitator	5,960
T-3	4	Extractor Settler, 189 gal, Haveg 41	3,240
T-4	1	Entrainment Separator, 559 gal, Haveg 41	1,145
T-5	1	Organic Storage, 1250 gal, plastic lined steel	1,120
T-6	1	Kerosene Storage, 1500 gal, steel	440
T-7	1	Organic Make-up, 100 gal, steel, 1/2 hp agitator	570
T-8	1	Organic Extract Head Tank, 159 gal, Haveg 41	680
T-9	2	Stripping Mixer, 258 gal, Haveg 60, 1 hp agitator	3,130
T-10	2	Stripping Settler, 258 gal, Haveg 60	1,680
T-11	2	Strip Solution Make-up Tank, 1269 gal, steel, 2 hp agitator	2,030
T-12	3	Precipitation Tanks, 1248 gal, wood, 2 hp agitator	3,285
T-13	1	Filtrate Tank, 2278 gal, wood	630
P-20	1	Leach Liquor Feed Pump, 75 gpm, stainless steel	930
P-21	2	Raffinate Pump, 75 gpm, stainless steel	1,860
P-22	5	Extractor Interstage Pumps, 75 gpm, stainless steel	4,650
P-23	2	Organic Feed Pump, 25 gpm, stainless steel	1,600
P-24	1	Kerosene Transfer Pump, 20 gpm, mild steel	470
P-25	1	Organic Make-up Pump, 20 gpm, mild steel	470
P-26	2	Organic Extract Pump, 25 gpm, stainless steel	1,600
P-27	2	Strip Solution Feed Pump, 5 gpm, Hastelloy	1,070
P-28	1	Filter Feed Pump, 30 gpm, rubber lined	950
P-29	1	Filtrate Pump, 30 gpm, rubber lined	950
P-30	2	Strip Interstage Pump, 5 gpm, Hastelloy	1,070
F-40	2	Filter Press, 480 sq ft, wood	7,580
		Total	$71,500

*Includes spares where necessary.

TABLE 21. CRITERIA, DAPEX CLARIFIED LIQUOR PROCESS

General	
Feed to Extractor	Clarified Leach Liquor
U_3O_8 in Clarified Leach Liquor 1/	94.0% of U_3O_8 in the ore
Unaccountable Loss of U_3O_8 1/	0.25% of U_3O_8 in leach liquor
Extraction	
Extractant	di(2-ethylhexyl)phosphoric acid (D2EHPA)
Conc. of Extractant	0.1 molar
Molecular wt of Extractant	322
Diluent	30 gms/liter tributyl phosphate (TBP) in kerosene
Loading of Extract	5.90 g U_3O_8 per liter
Number of Stages	4 countercurrent
Mixer: 3/	
Type	baffled mixer
Residence Time	2 minutes
Settler: 3/	
Type	shallow tank
Aqueous Holdup	1-3/4 min
Organic Holdup	3 min
U_3O_8 in Raffinate	0.003 g U_3O_8 per liter of solution
U_3O_8 in Barren Organic 2/	0.012 g U_3O_8 per liter
Stripping	
Reagent	100 gms/liter sodium carbonate
Theoretical requirement 2/	3 moles CO_3/mole U plus 1/2 mole CO_3/mole excess D2EHPA
Usage 2/	130% of theoretical
Conc. of U_3O_8 in Loaded Strip Sol'n 3/	56.6 g U_3O_8 per liter
Number of Stages 2/	two, countercurrent
Residence Time in Mixer 3/	12 min
Residence Time in Settler 3/	12 min
Impeller Diameter	1/2 tank diameter
Impeller Speed	350 rpm

1/ Section standard.
2/ Laboratory.
3/ Assumed.

TABLE 21 (continued)

Product Recovery	
Amount of Sulfuric Acid	neutralize all $CO_3^{=}$ and acidify to pH of 1.5
Precipitant	ammonia (anhydrous)
Theoretical Requirement	3 moles NH_3/mole U
Usage 3/	150% of theoretical
Product Grade	75% U_3O_8
Filter Cake	60% water
U_3O_8 in Filtrate	0.001 g U_3O_8 per liter
Reduction 2/	
Reducing Agent	iron
Particle Size	100 mesh
Theoretical Requirement	0.5 moles Fe per mole Fe(III) reduced
Usage	125% of theoretical
Reaction Time	30 min
Fe(III) in Liquor	twice conc. of U_3O_8
Degree of Completion of Reduction	80% of Fe(III) in liquor
Loss of Organic Materials	
Entrainment in:	
Raffinate	0.25 ml organic per liter aqueous
Loaded Strip 3/	0.025 vol %
Solubility 2/	
D2EHPA in Leach Liquor	5 ppm
D2EHPA in Loaded Strip	75 ppm
TBP in Leach Liquor	30 ppm
TBP in Loaded Strip	40 ppm
Misc. Losses 1/	100 gals of organic phase per month

flows from the extraction section into a holdup tank (T-8) from which it is pumped to the stripping operation.

The organic extract flows through the stripping section (T-9 and T-10) countercurrent to the aqueous sodium carbonate strip solution (from T-11). The organic phase is stripped of its uranium content and the barren organic flows by gravity to the storage tank (T-5) for re-use. The uranium loaded strip solution flows to the precipitation tanks (T-12) where sulfuric acid is added to destroy the carbonate and then ammonia is added to precipitate the uranium. At the end of precipitation the slurry is filtered (F-40), and the filtrate and wash water are discarded.

It is estimated that the Dapex clarified liquor process facility would cost $189,888 and that the total of direct operating costs plus amortization would be $0.471 per lb of U_3O_8 produced. These costs are shown in Tables 17 and 18. The cost of the operating supplies is shown in Table 19, the cost of installed process equipment in Table 20, and the criteria in Table 21.

URANIUM RECOVERY FROM SLIMES SLURRY

One estimate (No. 5) has been made of the cost of recovery of uranium from slimes slurry (leach slurry from which the sands have been removed). When extracting from a slimes slurry using solvent extraction techniques a portion of the organic phase is entrained with the slimes slurry and is lost. Entrainment data from process testing studies as to the extent of the organic phase losses are not available at this time. The losses which have been assumed for this estimate are based on preliminary laboratory data and are believed to be comparable to those expected in actual plant operation.

DAPEX SLIMES SLURRY PROCESS (COST ESTIMATE No. 5)

The Dapex process for the recovery of uranium from slimes slurries by solvent extraction uses specific dialkyl phosphoric acids (dissolved in kerosene) as the uranium extractant. The Dapex process may also be applied to the extraction of uranium from clarified leach liquors and leach slurries (see Cost Estimates Nos. 4 and 6). Extraction of iron is suppressed by

largely reducing it to the ferrous state prior to extraction. For this estimate it has been assumed that this reduction could be accomplished in the last leach tank; therefore, the cost of the reductant has been included but the cost of the tank has not been included.

This estimate is based upon laboratory and process testing data available prior to August, 1955. The relationship between the Dapex slimes slurry process and other processes is shown in Fig. 13.

The process is shown in Figs. 14 and 15. The slimes slurry leaving the sands-slimes separation system is stored in a head tank (T-1, Fig. 14). The slimes slurry is pumped from the head tank (T-1) through three mixer-settlers (T-2 and T-3) countercurrent to the organic phase* which extracts essentially all of the uranium. The raffinate is pumped to a retention tank (T-4) to provide sufficient settling time to recover most of the organic entrainment before discarding the raffinate. The organic extract flows from the extraction section into a holdup tank (T-6) from which it is pumped to the stripping operation.

The organic extract flows through the stripping section (T-7, T-8, and T-9) countercurrent to the aqueous sodium carbonate strip solution (from T-10). The organic phase is stripped of its uranium content and the barren organic flows by gravity to the storage tank (T-14) for re-use. The uranium loaded strip solution flows to the precipitation tanks (T-11) where sulfuric acid is added to destroy the carbonate and then ammonia is added to precipitate the uranium. At the end of precipitation, the slurry is filtered (F-40) and the filtrate and wash water are discarded.

It is estimated that the Dapex slimes-slurry facility would cost $274,242 and that the total of direct operating costs plus amortization would be $0.660 per lb of U_3O_8 produced. These costs are shown in Tables 22 and 23. The cost of the operating supplies is shown in Table 24, the cost of the installed process equipment in Table 25, and the criteria in Table 26.

---

*Di(2-ethylhexyl)phosphoric acid, (Di2EHPA) dissolved in kerosene modified with tributyl phosphate (TBP) assumed for cost figures.

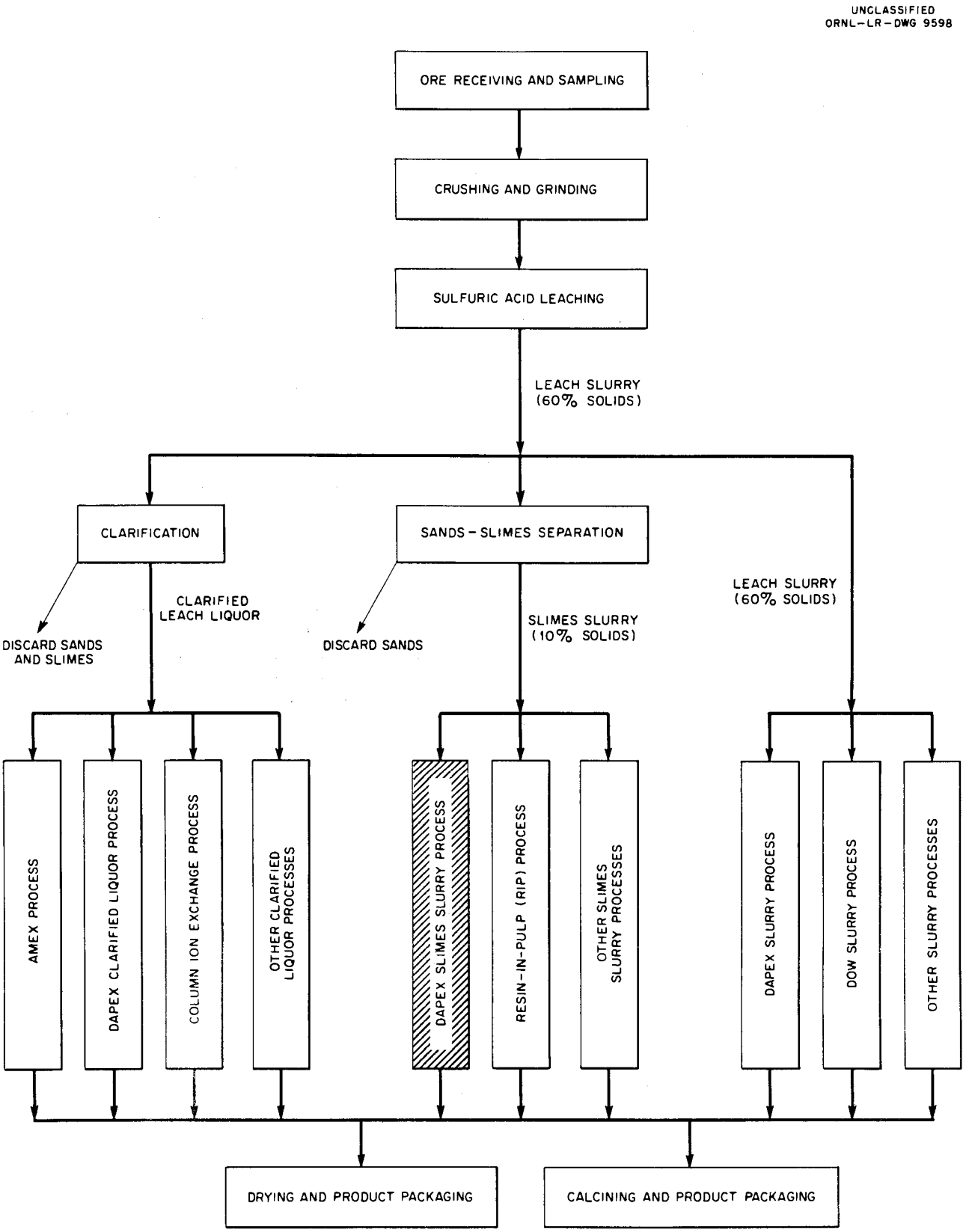

Fig. 13. Relationship between Dapex Slimes Slurry Process and Other Processes.

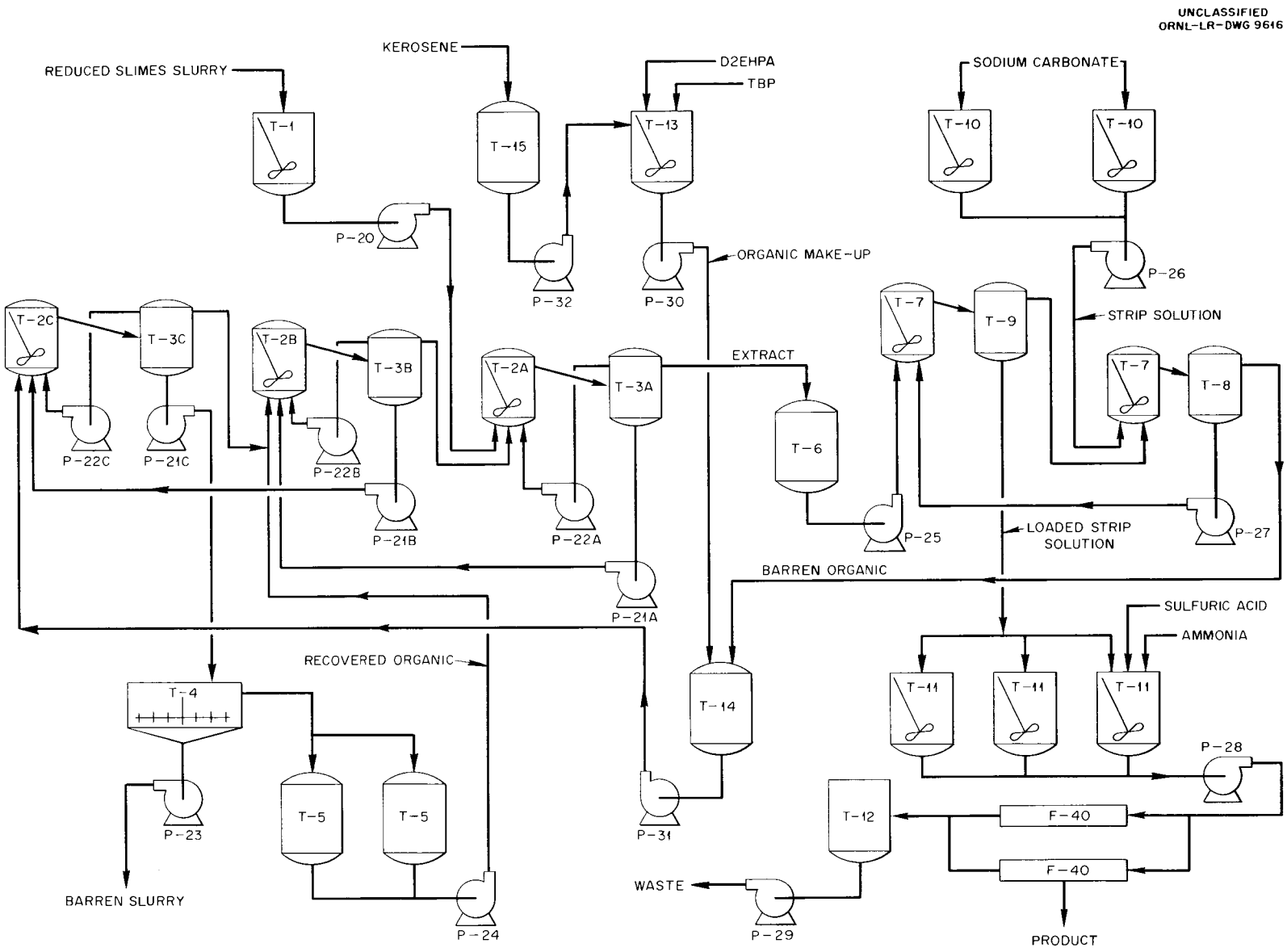

Fig. 14. Dapex Slimes Slurry Process, Process and Equipment Flow Diagram.

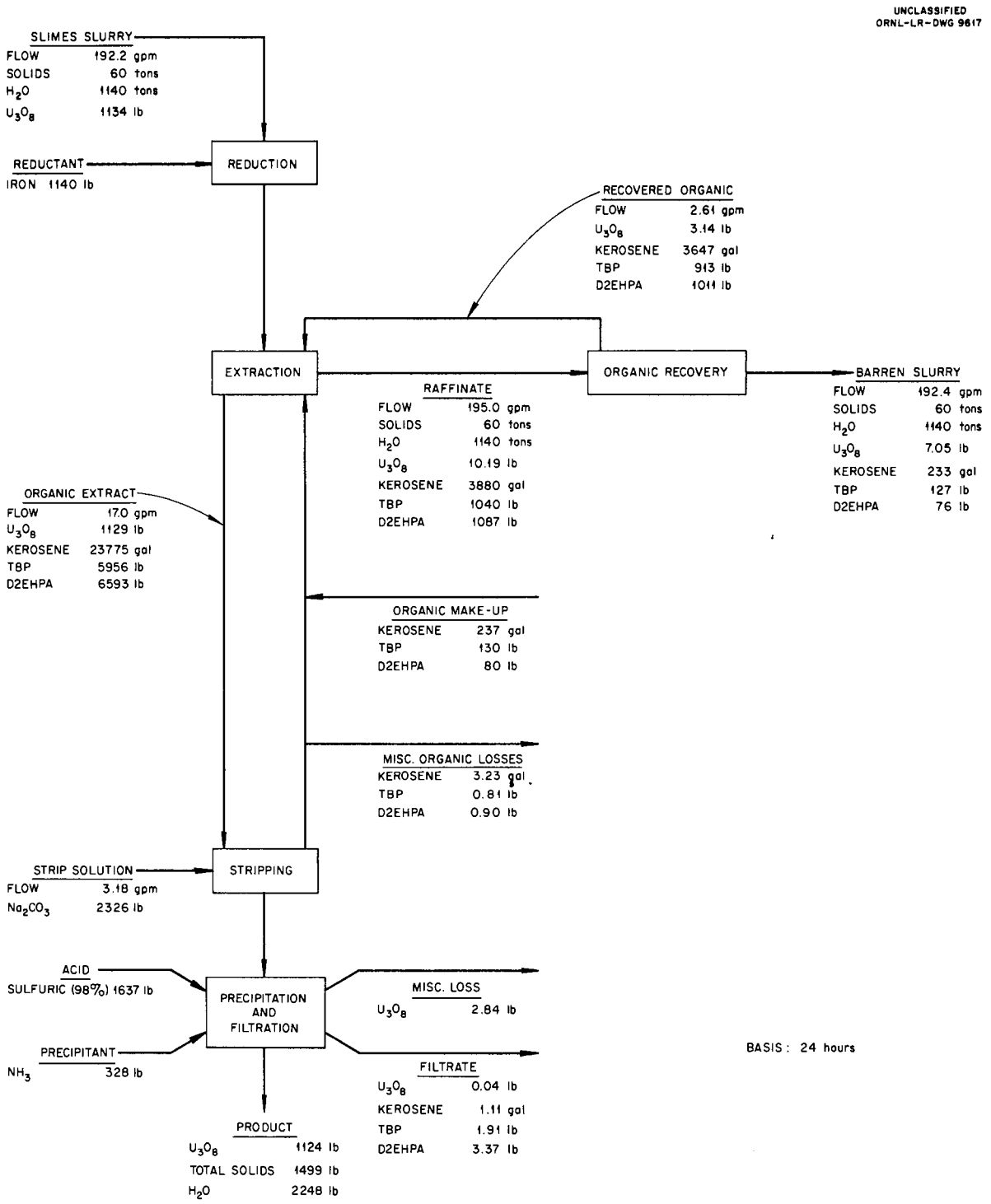

Fig. 15. Dapex Slimes Slurry Process, Materials Flow Diagram.

TABLE 22. COST OF DAPEX SLIMES-SLURRY PROCESS

	Cost Per Day	Cost Per Pound of U_3O_8
Labor		
Operating 1/	$162.00	$0.144
Maintenance 2/	30.47	0.027
Supplies		
Operating 3/	321.68	0.286
Maintenance 4/	38.09	0.034
Utilities		
Steam	9.09	0.008
Electricity	28.59	0.025
Total Operating Cost	$589.92	$0.524
Amortization 5/	152.36	0.136
Total	$742.28	$0.660

1/ Three men per shift.

2/ Four percent of total construction cost per 360-day year (see Table 23).

3/ See Table 24.

4/ Five percent of total construction cost per 360-day year (see Table 23).

5/ Twenty percent of total construction cost per 360-day year (see Table 23).

TABLE 23. COST OF DAPEX SLIMES-SLURRY PROCESS FACILITY

A.	Cost of Installed Process Equipment 1/	$103,280
B.	Other Direct Costs	
	Process Piping (30% of A)	30,984
	Instrumentation (3% of A)	3,098
	Electrical Wiring 2/	6,450
	Building (113,440 cu ft) 3/	55,000
	Footings and Foundations (5% of A)	5,164
	Painting and Scaffolding (2% of A)	2,066
C.	Total Direct Costs	$206,042
D.	Engineering and Field Expense (10% of C)	20,604
E.	Contingency [10% of (C+D)]	22,665
F.	Contractor's Fee and Overhead [10% of (C+D+E)]	24,931
G.	Total Construction Cost	$274,242

1/ Includes materials, labor, and freight (see Table 25).

2/ Includes lighting, equipment, and instrumentation.

3/ Does not include lighting or sanitary facilities.

TABLE 24. COST OF OPERATING SUPPLIES, DAPEX SLIMES-SLURRY PROCESS

Chemical	Consumption Per Day	Cost Per Day	Cost Per Pound of U_3O_8
Kerosene	237 gal	$ 33.18	$0.030
Tributyl phosphate (TBP)	130 lb	68.90	0.061
Di(2-ethylhexyl)phosphoric acid (D2EHPA)	80 lb	49.17	0.044
Iron	1140 lb	74.67	0.066
Sodium Carbonate	2326 lb	52.34	0.046
Sulfuric acid (98%)	1637 lb	24.56	0.022
Ammonia (anhydrous)	328 lb	18.86	0.017
Total		$321.68	$0.286

TABLE 25. INSTALLED PROCESS EQUIPMENT COSTS, DAPEX SLIMES-SLURRY PROCESS

Item No.	No. Req'd*	Description	Installed Equipment Cost
T-1	1	Slurry Surge Tank, 50,000-gal, wood, 15 hp agitator	$ 8,130
T-2	3	Extractor Mixer, 252-gal, Haveg 41, 10 hp agitator	11,670
T-3	3	Extractor Settler, 3070-gal, plastic lined steel	9,870
T-4	1	Organic Recovery Vessel, 23,000-gal, plastic lined steel and stainless steel, 3 hp agitator	20,440
T-5	2	Recovered Organic Tank, 2500-gal, plastic lined steel	3,240
T-6	1	Extract Surge Tank, 376-gal, plastic lined steel	660
T-7	2	Stripper Mixer, 59-gal, Haveg 60, 1/2 hp agitator	2,200
T-8	1	Stripper Interstage Settler, plastic lined steel	630
T-9	1	Stripper Final Settler, plastic lined steel	1,160
T-10	2	Strip Solution Tank, 2,022-gal, steel, 2 hp agitator	2,240
T-11	3	Precipitation Tank, 1987-gal, wood, 2 hp agitator	3,240
T-12	1	Filtrate Tank, 3350-gal, wood	550
T-13	1	Organic Make-Up Tank, 325-gal, stainless steel, 1/2 hp agitator	940
T-14	1	Barren Organic Storage Tank, 14,000 gal, steel	1,260
T-15	1	Kerosene Storage Tank, 5,875-gal, steel	1,160
P-20	2	Leach Slurry Feed Pump, 250 gpm, neoprene lined	2,300
P-21	5	Aqueous Interstage Pump, 250 gpm, neoprene lined	5,750
P-22	3	Organic Intrastage Pump, 2500 gpm, stainless steel	11,910
P-23	1	Barren Slurry Pump, 250 gpm, neoprene lined	1,150
P-24	1	Organic Return Pump, 5 gpm, stainless steel	800
P-25	2	Extract Pump, 25 gpm, stainless steel	1,600
P-26	2	Strip Solution Feed Pump, 10 gpm, iron	940
P-27	1	Stripper Interstage Pump, 10 gpm, iron	470
P-28	1	Filter Feed Pump, 6-35 gpm, neoprene lined	910
P-29	1	Filtrate Disposal Pump, 20 gpm, iron	470
P-30	1	Organic Make-Up Pump, 10 gpm, stainless steel	740
P-31	1	Organic Feed Pump, 25 gpm, stainless steel	800
P-32	1	Kerosene Transfer Pump, 25 gpm, iron	470
F-40	2	Filter Press, wood, 480 sq ft	7,580
		Total	$103,280

*Includes spares where necessary.

TABLE 26. CRITERIA,

DAPEX SLIMES-SLURRY PROCESS

General	
Slimes in ore 1/	30%
Feed to extractor	5% slimes slurry
U_3O_8 in slime slurry 1/	94.5% of U_3O_8 in the ore
Misc. loss of U_3O_8 1/	0.25% of U_3O_8 in slime slurry
Extraction	
Extractant	Di(2-ethylhexyl)phosphoric acid
Conc. of extractant	0.1 molar
Molecular wt of extractant	322
Diluent	3 vol % tributyl phosphate in kerosene
Loading of extract	5.52 g U_3O_8 per liter
Mixer: 3/	
Type	Baffled mixer
Impeller diameter	1/2 tank diameter
Unit power	0.031 hp per gal
Stage efficiency	85% at 0.1 min residence time
Internal phase ratio	10 vol organic: 1 vol aqueous
Continuous phase	Organic
Settler: 3/	
Type	Cone bottom tank
Slurry holdup	3 min (pure slurry basis)
Organic holdup	1.2 min
U_3O_8 in raffinate	0.003 g U_3O_8 per liter of sol'n
U_3O_8 in barren organic 2/	0.008 g U_3O_8 per liter
Organic entrained in slurry 3/	20 gal per ton of ore
No. of theoretical stages req'd	1.99

1/ Section standard.
2/ Laboratory.
3/ Process testing.
4/ Assumed.

TABLE 26 (continued)

Stripping	
Reagent	Sodium carbonate
Theoretical requirement 2/	3 moles CO_3/mole U plus 1/2 mole CO_3/mole excess D2EHPA
Usage 2/	120% of theoretical
Conc. of U_3O_8 in loaded strip sol'n 3/	29.5 g U_3O_8 per liter
No. of stages 2/	two, countercurrent
Residence time in mixer 4/	2 min
Residence time in inter-stage settler 4/	2 min
Residence time in final settler 4/	10 min
Unit power	0.0054 hp per gal
Organic Recovery 3/	
Initial organic content	20 gal per ton of ore
Final organic content	1.2 gal per ton of ore
Residence time of slurry	1.25 hr
Product Recovery	
Precipitant	ammonia (anhydrous)
Theoretical requirement	3 moles NH_3 per mole U
Usage 3/	150% of theoretical
Product grade	75% U_3O_8
Filter cake	60% water
U_3O_8 in filtrate	0.001 g U_3O_8 per liter
Reduction 2/	
Reducing agent	iron
Particle size	100 mesh
Theoretical requirement	0.5 moles Fe per mole Fe(III) reduced
Usage	125% of theoretical
Reaction time	30 min
Fe(III) in liquor	twice conc. of U_3O_8
Degree of completion of reduction	80% of Fe(III) in liquor

TABLE 26 (continued)

Loss of Organic Materials	
Entrainment in:	
Slurry after recovery operation 3/	1.2 gal per ton of ore
Loaded strip 4/	0.025 vol %
Solubility 2/	
D2EHPA in leach liquor.	5 ppm
D2EHPA in loaded strip.	75 ppm
TBP in leach liquor . .	30 ppm
TBP in loaded strip . .	40 ppm
Misc. losses 4/	100 gals of organic phase per month

URANIUM RECOVERY FROM LEACH SLURRY

One estimate (No. 6) has been made of the cost of recovery of uranium from leach slurry (containing both sands and slimes). When extracting from a leach slurry using solvent extraction techniques a portion of the organic phase is entrained with the leach slurry. In order to recover most of the entrained organic the leach slurry is diluted and a sands slimes separation is made and the organic is recovered from the resulting slimes slurry. Entrainment data from process testing studies as to the extent of the organic phase losses are not available at this time. The losses which have been assumed for this estimate are based on preliminary laboratory data and are believed to be comparable to those expected in actual plant operation.

DAPEX SLURRY PROCESS (COST ESTIMATE No. 6)

The Dapex process for the recovery of uranium from a sulfuric acid leach slurry uses specific dialkyl phosphoric acids (dissolved in kerosene) as the uranium extractant. The Dapex process may also be applied to the extraction of uranium from clarified leach liquor and slimes slurries (see Cost Estimate Nos. 4 and 5). Extraction of iron has been suppressed by largely reducing it to the ferrous state prior to extraction. For this estimate it has been assumed that the reduction could be accomplished in the last leach tank; therefore, the cost of the reductant has been included, but the cost of the tank has not been included.

This estimate is based on laboratory data available prior to March, 1955. The relationship between the Dapex leach slurry process and other processes is shown in Fig. 16.

The process is shown in Figs. 17 and 18. Slurry leaving the leaching system passes through a surge head tank (T-1, Fig. 17) prior to being pumped through four shrouded turbine mixer-settlers (T-2) countercurrent to the organic phase* which extracts essentially all of the uranium. Iron is not extracted since it has been largely reduced to the ferrous state. The raffinate is pumped to a hydroseparator (HS-40)

---

*Di(2-ethylhexyl)phosphoric acid dissolved in kerosene modified with capryl alcohol assumed for cost figures.

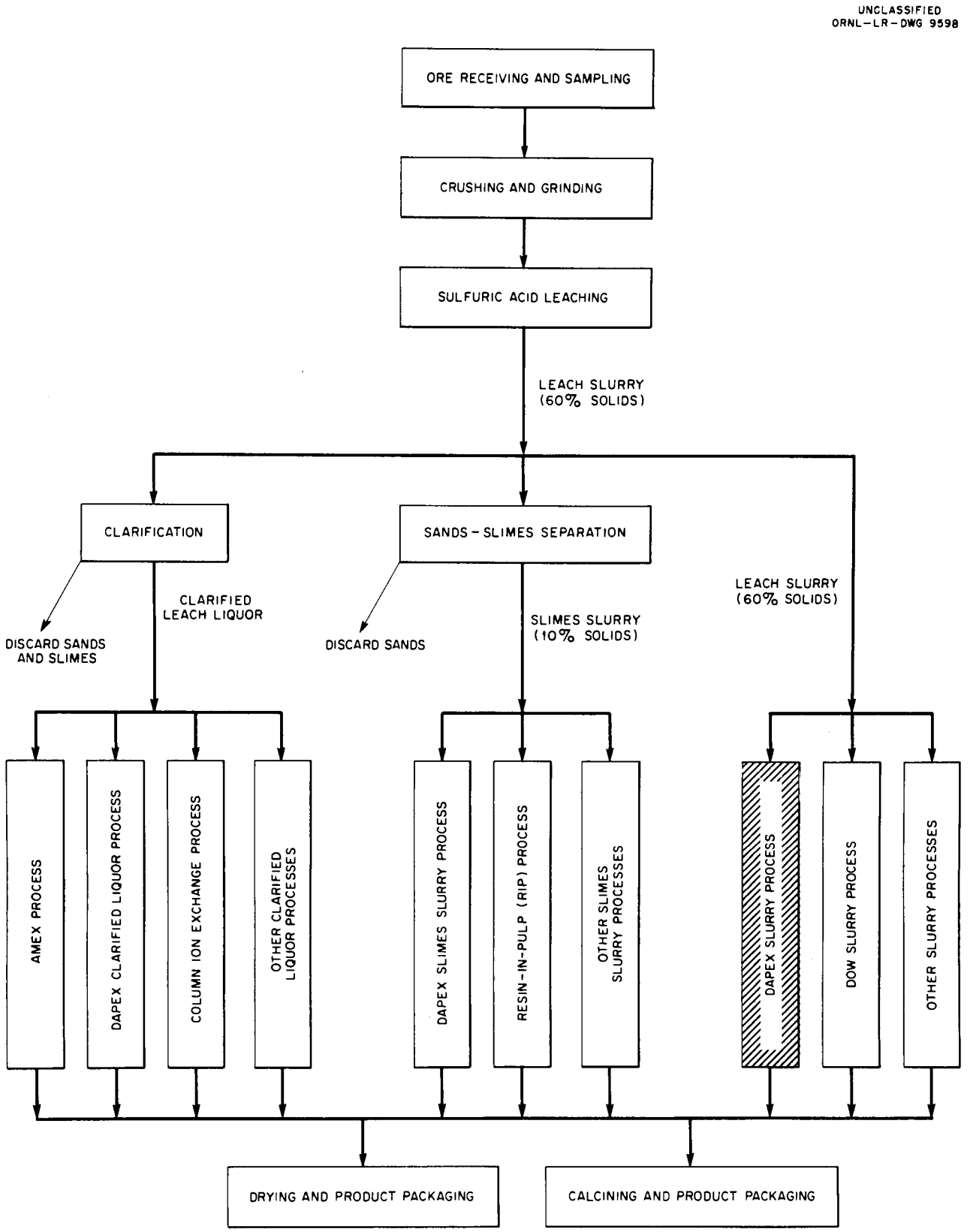

Fig. 16. Relationship between Dapex Slurry Process and Other Processes.

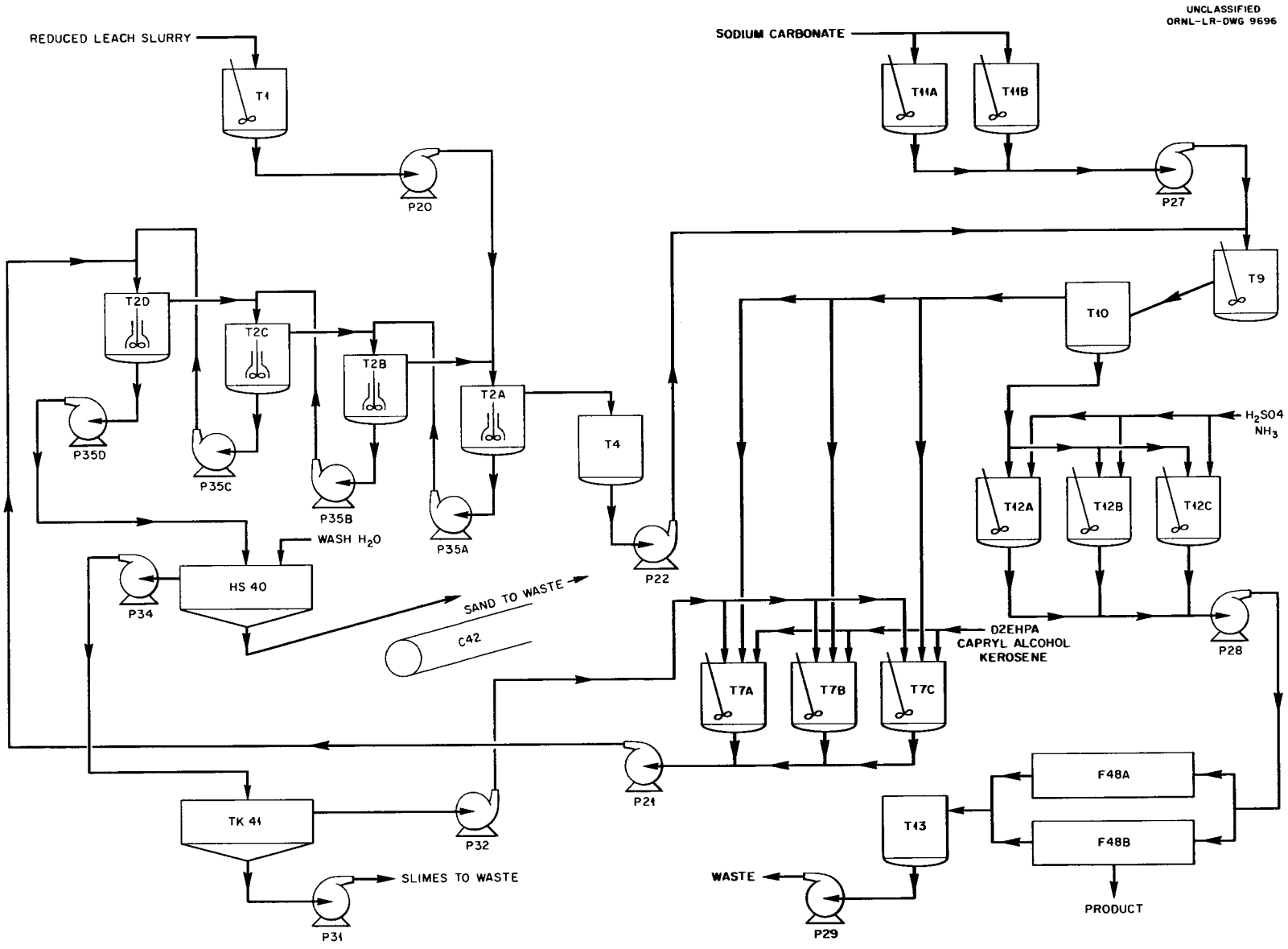

Fig. 17. Dapex Slurry Process, Process and Equipment Flow Diagram.

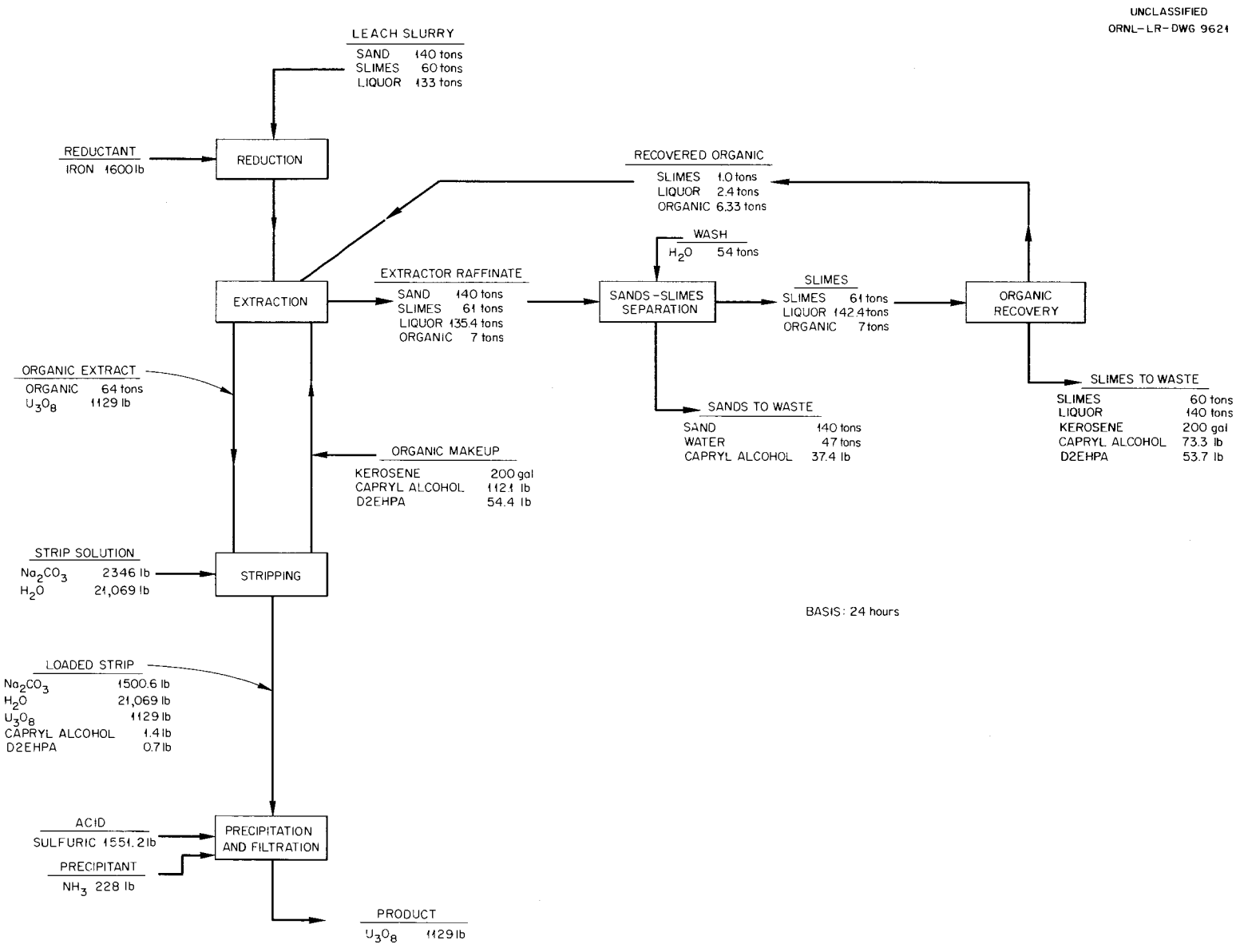

Fig. 18. Dapex Slurry Process, Materials Flow Diagram.

TABLE 27. COST OF DAPEX SLURRY PROCESS

	Cost Per Day	Cost Per Pound of U_3O_8
Labor		
Operating 1/	$162.00	$0.144
Maintenance 2/	30.37	0.027
Supplies		
Operating 3/	277.25	0.246
Maintenance 4/	37.96	0.033
Utilities		
Electricity	8.71	0.008
Total Operating Costs	$516.29	$0.458
Amortization 5/	151.85	0.134
Total	$668.14	$0.592

1/ Three men per shift.

2/ Four percent of the total construction cost per 360-day year (see Table 28).

3/ See Table 29.

4/ Five percent of the total construction cost per 360-day year (see Table 28).

5/ Twenty percent of the total construction cost per 360-day year (see Table 28).

TABLE 28. COST OF DAPEX SLURRY PROCESS FACILITY

A.	Cost of Installed Process Equipment 1/	$ 96,070
B.	Other Direct Costs	
	Process Piping (50% of A)	48,035
	Instrumentation (3% of A)	2,882
	Electrical Wiring 2/	1,650
	Building (96,000 cu ft) 3/	50,000
	Footing and Foundations (5% of A)	4,804
	Painting and Scaffolding (2% of A)	1,921
C.	Total Direct Costs	$205,362
D.	Engineering and Field Expense (10% of C)	20,536
E.	Contingency [10% of (C+D)]	22,590
F.	Contractor's Fee and Overhead [10% of (C+D+E)]	24,849
G.	Total Construction Cost	$273,337

1/ Includes materials, labor, and freight (see Table 30).

2/ Includes lighting, equipment, and instrumentation.

3/ Does not include lighting and sanitary facilities.

TABLE 29. COST OF OPERATING SUPPLIES,

DAPEX SLURRY PROCESS

Chemical	Consumption Per Day	Cost Per Day	Cost Per Pound of U_3O_8
Iron	1600 lb	$104.80	$0.093
Ammonia, anhydrous	228 lb	13.11	0.011
Sulfuric acid, 66° Be	1551.2 lb	22.18	0.020
Sodium carbonate	2346 lb	52.79	0.047
Di(2-ethylhexyl)phosphoric acid (D2EHPA)	54.4 lb	33.43	0.030
Capryl alcohol, 95%	112.1 lb	22.94	0.020
Kerosene	200 gal	28.00	0.025
Total		$277.25	$0.246

TABLE 30. INSTALLED PROCESS EQUIPMENT COSTS, DAPEX SLURRY PROCESS

Item No.	No. Req'd*	Description	Installed Equipment Cost
T-1	1	Feed Tank, 25,000 gal, wood, 3 hp agitator	$ 6,750
T-2	4	Turbo Mixer Settler Extractor, 4500 gal, neoprene lined steel, 1 hp agitator	13,900
T-4	1	Organic Extract Head Tank, 1,000 gal, neoprene lined steel	835
T-7	3	Organic Make-up Feed Tank, 8,000 gal, neoprene lined steel, 1 hp agitator	13,125
T-9	1	Stripper Mixer, 50 gal, stainless, 1/2 hp agitator	930
T-10	1	Stripper Settler, 100 gal, stainless steel	480
T-11	2	Strip Solution Make-up Tank, 2,500 gal, steel, 3 hp agitator	2,980
T-12	3	Precipitation Tank, 2,000 gal, wood, 3 hp agitator	3,870
T-13	1	Filtrate Head Tank, 2,000 gal, wood	430
P-20	2	Slurry Feed Pump, rubber lined steel, 35 gpm	1,500
P-21	2	Organic Feed Pump, Extractor, neoprene lined, 16 gpm	1,720
P-22	2	Organic Feed Pump Stripper, neoprene lined, 16 gpm	1,720
P-27	2	Strip Solution Feed Pump, steel, 5 gpm	520
P-28	1	Filter Feed Pump, neoprene lined, 5 gpm	900
P-29	1	Filtrate Pump, steel, 5 gpm	470
P-31	2	Thickener Bottoms Pump, stainless steel, 40 gpm	1,500
P-32	2	Recovered Organic Pump, stainless steel, 2 gpm	1,310
P-34	2	Hydroseparator Overflow Pump, stainless steel, 40 gpm	1,500
P-35	6	Extractor Aqueous Interstage Pump, stainless steel, 40 gpm	4,500
HS-40	1	Hydroseparator, stainless steel	7,730
TK-41	1	Thickener, rubber lined steel, 14-ft diam, 10,000 gal	6,820
C-42	1	Conveyor, 24-in.	15,000
F-48	2	Filter, wood, 480 sq ft	7,580
		Total	$96,070

*Includes spares where necessary.

TABLE 31. CRITERIA, DAPEX SLURRY PROCESS

General	
Feed Slurry Composition . . .	60% solids (contains both sands and slimes)
Uranium dissolved in Slurry .	95% of uranium in ore
Uranium in Product.	99% of uranium in the slurry
Extraction	
Extractant.	di(2-ethylhexyl)phosphoric acid (D2EHPA)
Conc. of Extractant	0.1 molar
Molecular weight of Extractant	322
Diluent	20 grams capryl alcohol per liter in kerosene
Loading of Organic Phase . .	7.07 g U_3O_8/liter
Stripping	
Loading of Strip Effluent . .	53.1 g U_3O_8/liter
Strip Solution Composition. .	10% by wt Na_2CO_3
Loss of Organic Material	
Entrainment in Raffinate. . .	0.2% by wt of input slurry
Solubility of capryl alcohol in raffinate . . .	100 ppm
Solubility of Reagent (D2EHPA) in strip solution	30 ppm
Solubility of Capryl Alcohol in Strip	60 ppm

to separate the sands and dilute the slurry to permit recovery of most of the organic entrainment in a thickener (TK-41) before discarding the barren slimes slurry. The organic extract flows from the extraction section into a holdup tank (T-4) from which it is pumped to the stripping operation.

The organic extract flows through the stripping section (T-9 and T-10) where the uranium is transferred from the organic to the aqueous sodium carbonate strip solution (from T-11). The barren organic flows by gravity to the storage tank (T-7) for re-use. The uranium loaded strip solution flows to the precipitation tanks (T-12) where sulfuric acid is added to destroy the carbonate and the ammonia is added to precipitate the uranium. At the end of precipitation, the slurry is filtered (F-48) and the filtrate and wash water are discarded.

It is estimated that the Dapex slurry facility would cost $273,337 and that the total of direct operating costs plus amortization would be $0.592 per lb of U_3O_8 produced. These costs are shown in Tables 27 and 28. The cost of the operating supplies is shown in Table 29, the cost of the installed process equipment in Table 30, and the criteria in Table 31.

AUXILIARY PROCESSES

In order to compare the over-all costs of recovery, estimates of four auxiliary processes were made which complement the costs of uranium recovery from leach slurry, slimes slurry, or clarified leach liquor. These are the cost of clarification, cost of sands-slimes separation, cost of drying and product packaging and cost of calcining and product packaging. Each of the processes was based on operating techniques which were similar to the methods employed on the Colorado Plateau.

CLARIFICATION (COST ESTIMATE No. 7)

Clarified leach liquor is produced by countercurrent decantation. Sands and slimes, which are essentially free of soluble uranium salts, are discarded. The relationship between the clarification and other processes is given in Fig. 19.

The clarification process is shown in Figs. 20 and 21. The leach slurry is processes through four screw-type classifiers which remove and countercurrently wash the sands, and

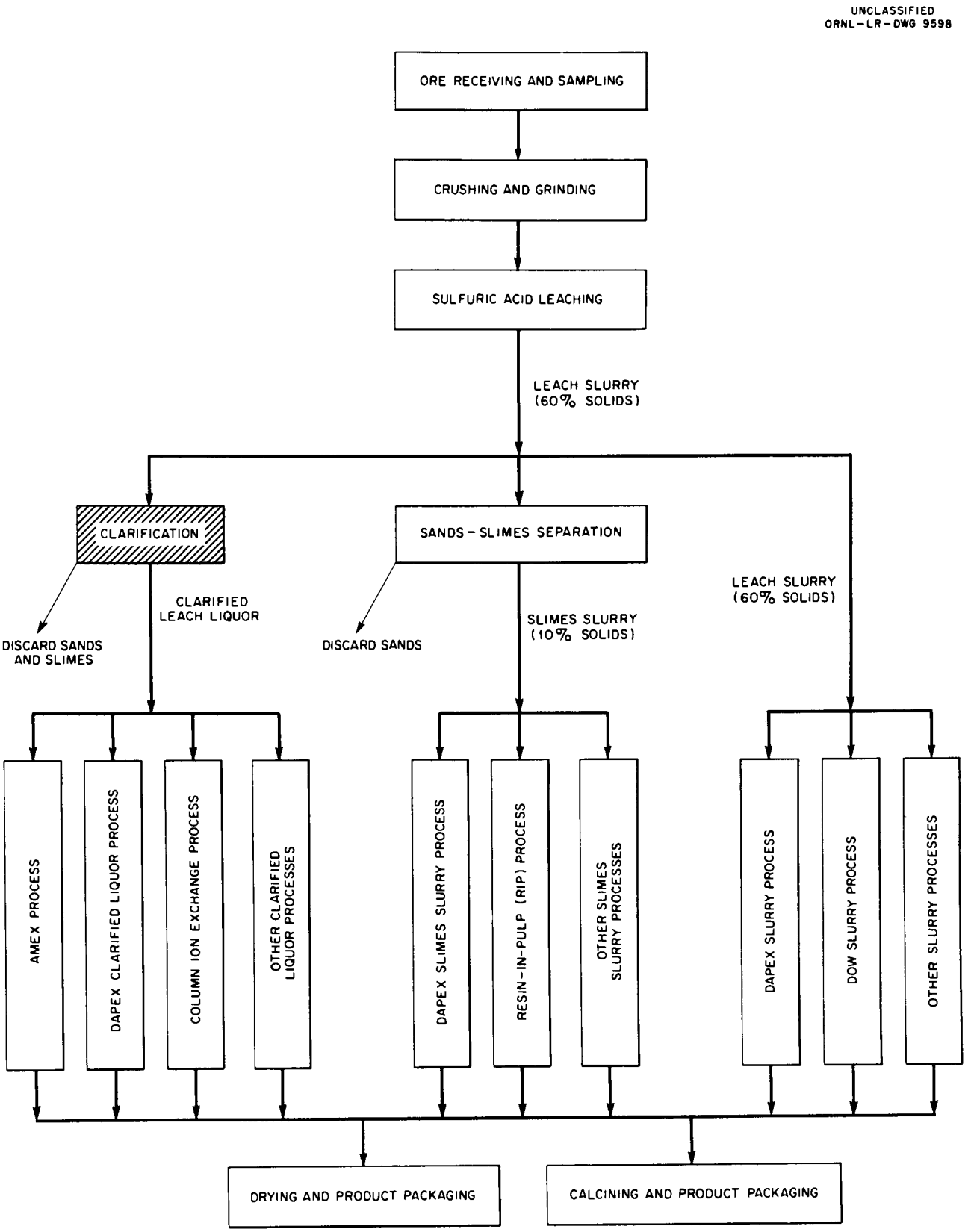

Fig. 19. Relationship between Clarification Process and Other Processes.

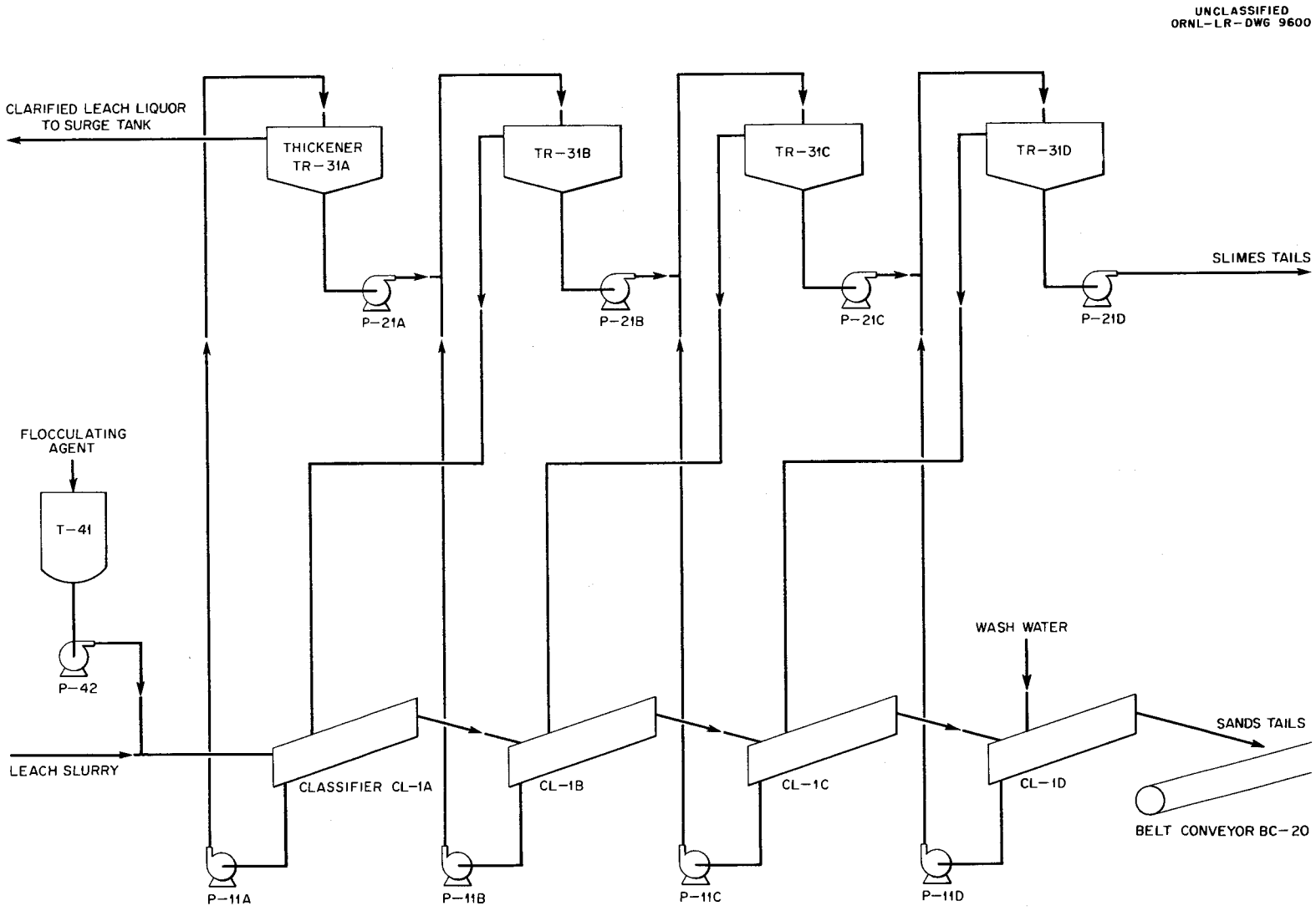

Fig. 20. Clarification, Process and Equipment Flow Diagram.

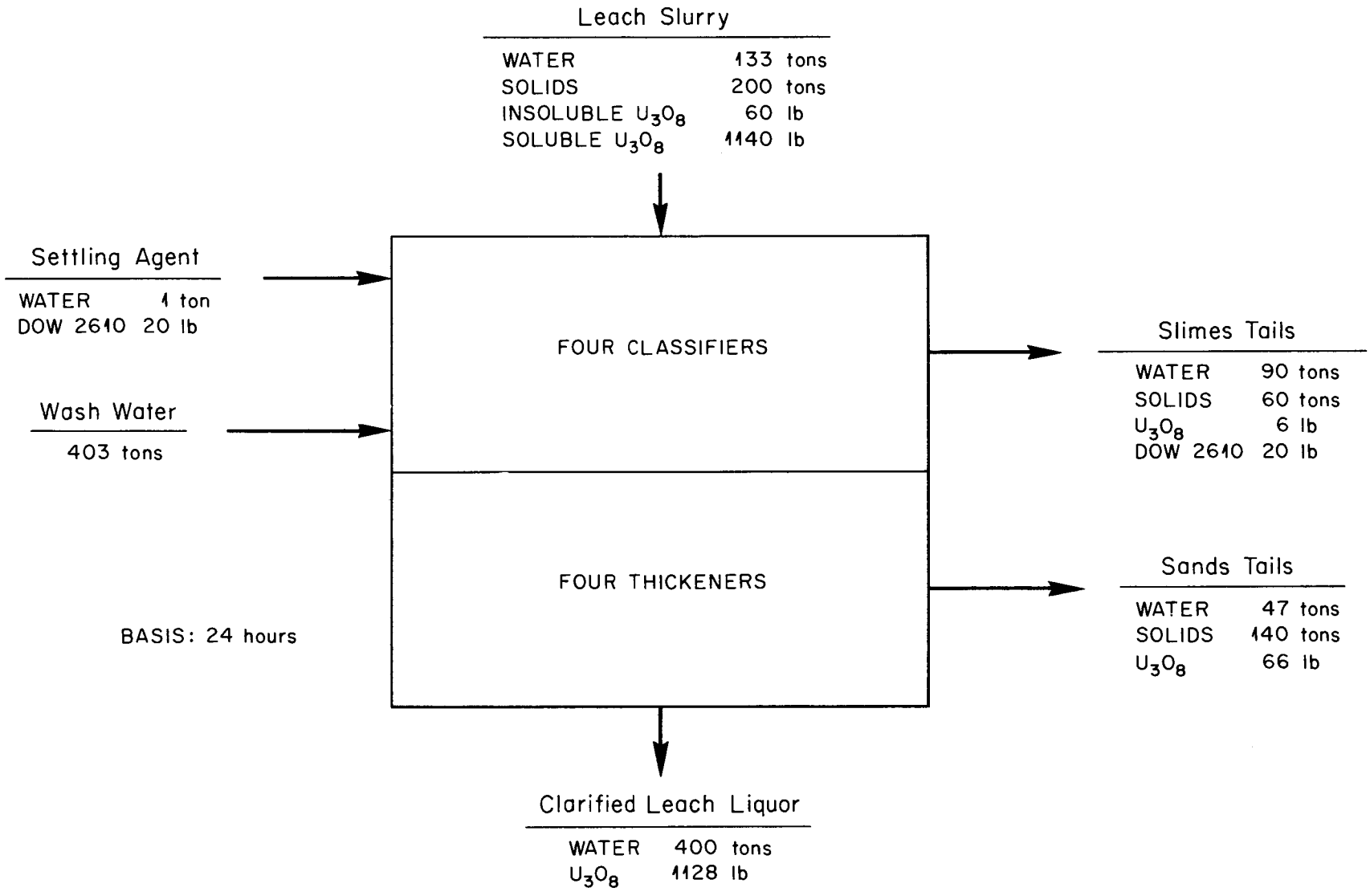

Fig. 21. Clarification, Materials Flow Diagram.

TABLE 32. COST OF CLARIFICATION

	Cost per Day	Cost Per Pound of U_3O_8
Labor		
Operating 1/	$ 54.00	$0.048
Maintenance 2/	26.60	0.024
Supplies		
Operating 3/	21.20	0.019
Maintenance 4/	33.25	0.030
Utilities		
Electricity	6.60	0.006
Total Operating Cost	$141.65	$0.127
Amortization 5/	133.02	0.119
Total	$274.67	$0.246

1/ One man per shift.

2/ Four percent of total construction cost per 360-day year (see Table 33).

3/ 0.1 lb Dow Separan 2610 per ton of ore.

4/ Five percent of total construction cost per 360-day year (see Table 33).

5/ 20% of total construction cost per 360-day year (see Table 33).

TABLE 33. COST OF CLARIFICATION FACILITY

A.	Cost of installed process equipment 1/	$ 138,152
B.	Other Direct Costs	
	Process piping (7% of A)	9,671
	Instrumentation (3% of A)	4,145
	Electrical wiring 2/	1,250
	Building (21,360 cu ft) 3/	17,000
	Footings and foundations (5% of A)	6,908
	Painting and scaffolding (2% of A)	2,763
C.	Total Direct Costs	$ 179,889
D.	Engineering and field expense (10% of C)	17,989
E.	Contingency [10% of (C+D)]	19,788
F.	Contractor's fee and overhead [10% of (C+D+E)]	21,766
G.	Total Construction Cost	$ 239,432

1/ Includes material, labor, and freight (see Table 34).

2/ Includes lighting, equipment, and instrumentation.

3/ Does not include lighting or sanitary facilities.

TABLE 34. INSTALLED PROCESS EQUIPMENT COSTS, CLARIFICATION

Item No.	No. Req'd*	Description	Installed Equipment Cost
CL-1	4	Classifier, 30-inch screw type, acid proof construction	$ 30,908
P-11	8	Classifier overflow pump rubber lined centrifugal	6,320
BC-20	1	Belt conveyor, 24-inch	15,000
P-21	8	Thickener underflow pump rubber lined centrifugal	5,992
TR-31	4	Thickener, 36-foot diameter, wood tank, acid proof construction	79,212
T-41, P-42	1	Settling agent feeder (package unit)	720
		Total	$138,152

*Includes spares where necessary.

TABLE 35. CRITERIA, CLARIFICATION

Soluble uranium loss in clarification tails	1% of U_3O_8 in ore
Mesh separation in classifiers	100 mesh
Unit settling area of thickeners	15 sq ft per ton of solids per day
Thickener underflow	40% solids
Classifier discharge (sand)	75% solids

four thickeners which remove and countercurrently wash the slimes. A flocculating agent* is added to the leach slurry to increase the settling rate of the slimes. It is estimated that a clarification facility would cost $239,432 and that the total of direct operating costs plus amortization would be $0.246 per lb of U_3O_8 produced (for an ore-to-product recovery of 93 to 95%). These costs are shown in Tables 32 and 33. The installed costs of the process equipment are given in Table 34, and the criteria are summarized in Table 35.

SANDS-SLIMES SEPARATION (COST ESTIMATE No. 8)

A slimes slurry is produced from a leach slurry by countercurrent classification. Sands which are essentially free of soluble uranium salts are discarded. The relationship between the sands-slimes separation and other processes is given in Fig. 22. The sands-slimes separation process upon which this estimate is based is shown in Figs. 23 and 24. The sands and slimes are separated and the sands are countercurrently washed in four classifiers**. The last traces of sands are removed from the slimes slurry using a liquid cyclone.

It is estimated that a sands-slimes separation facility would cost $107,437 and that the total of direct operating costs plus amortization would be $0.106 per lb of U_3O_8 produced (for an ore-to-product recovery of 93 to 95%). These costs are shown in Tables 36 and 37. The installed costs of the process equipment are given in Table 38, and the criteria are summarized in Table 39.

DRYING AND PRODUCT PACKAGING (COST ESTIMATE No. 9)

The drying operation is primarily applicable to the processing of precipitates having a low ammonium content. The relationship between the drying and product packaging and other processes is shown in Fig. 25.

The drying and product packaging process is shown in Fig. 26. The wet uranium product filter cake from the extraction process is prepared for shipment by drying it on a steam table and packaging it in steel drums.

---

*Dow Separan 2610 assumed for cost figures.
**Screw type classifiers were used for cost estimating purposes.

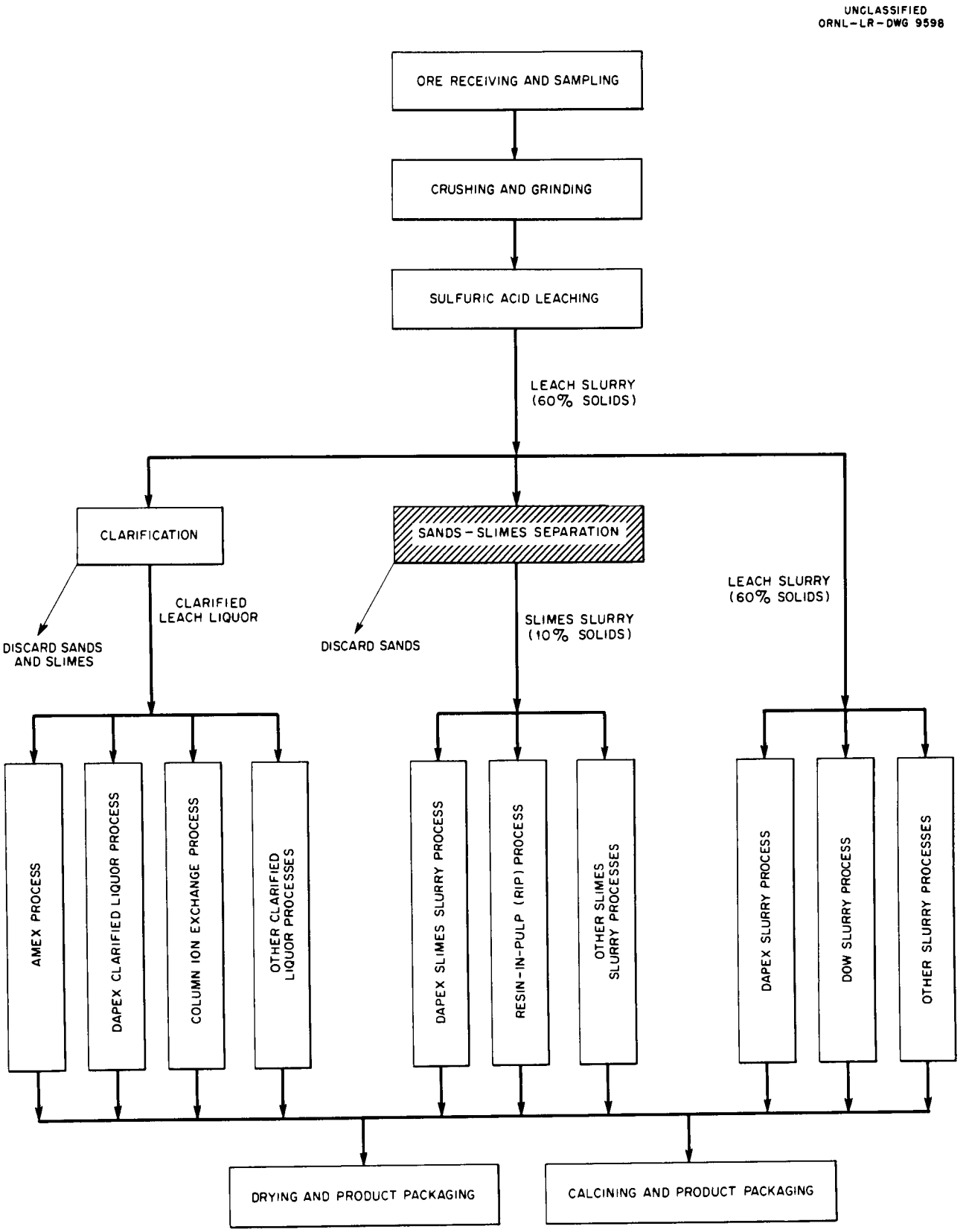

Fig. 22. Relationship between Sands–Slimes Separation Process and Other Processes.

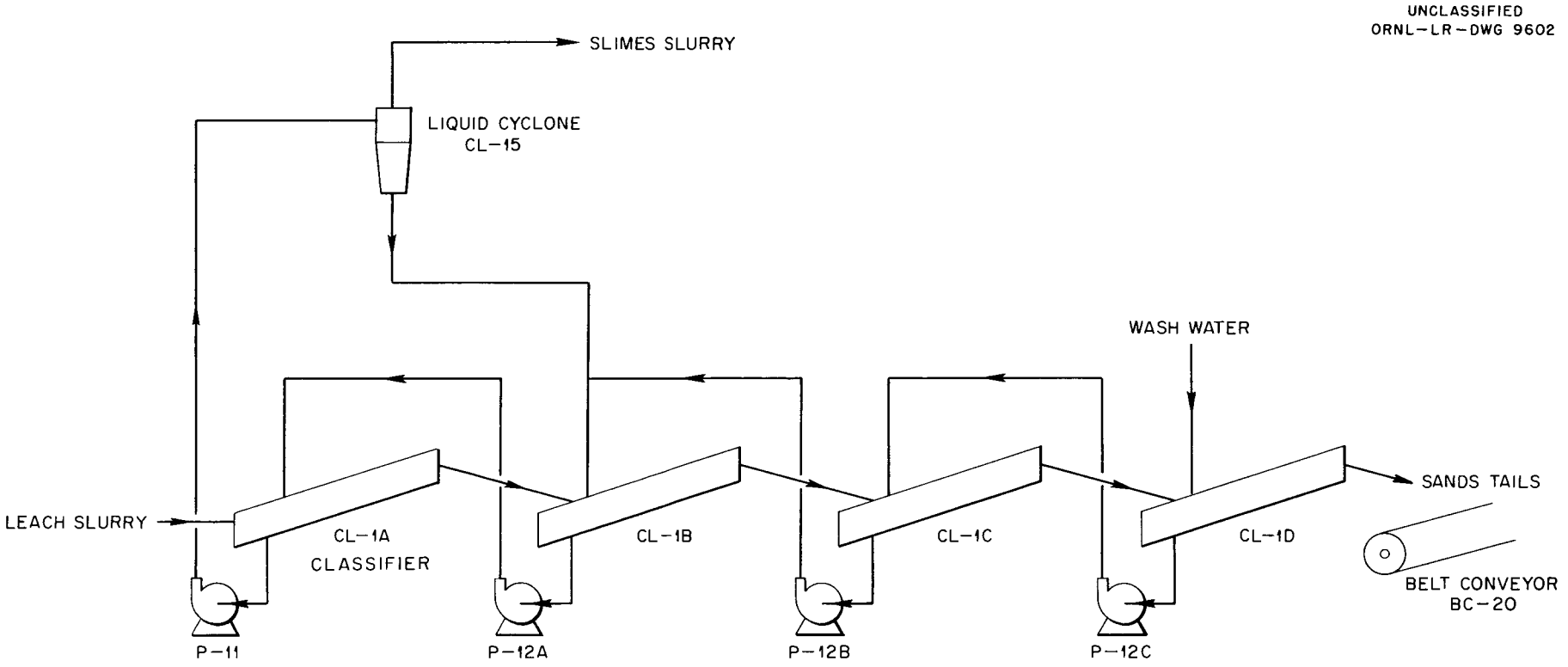

Fig. 23. Sands–Slimes Separation, Process and Equipment Flow Diagram.

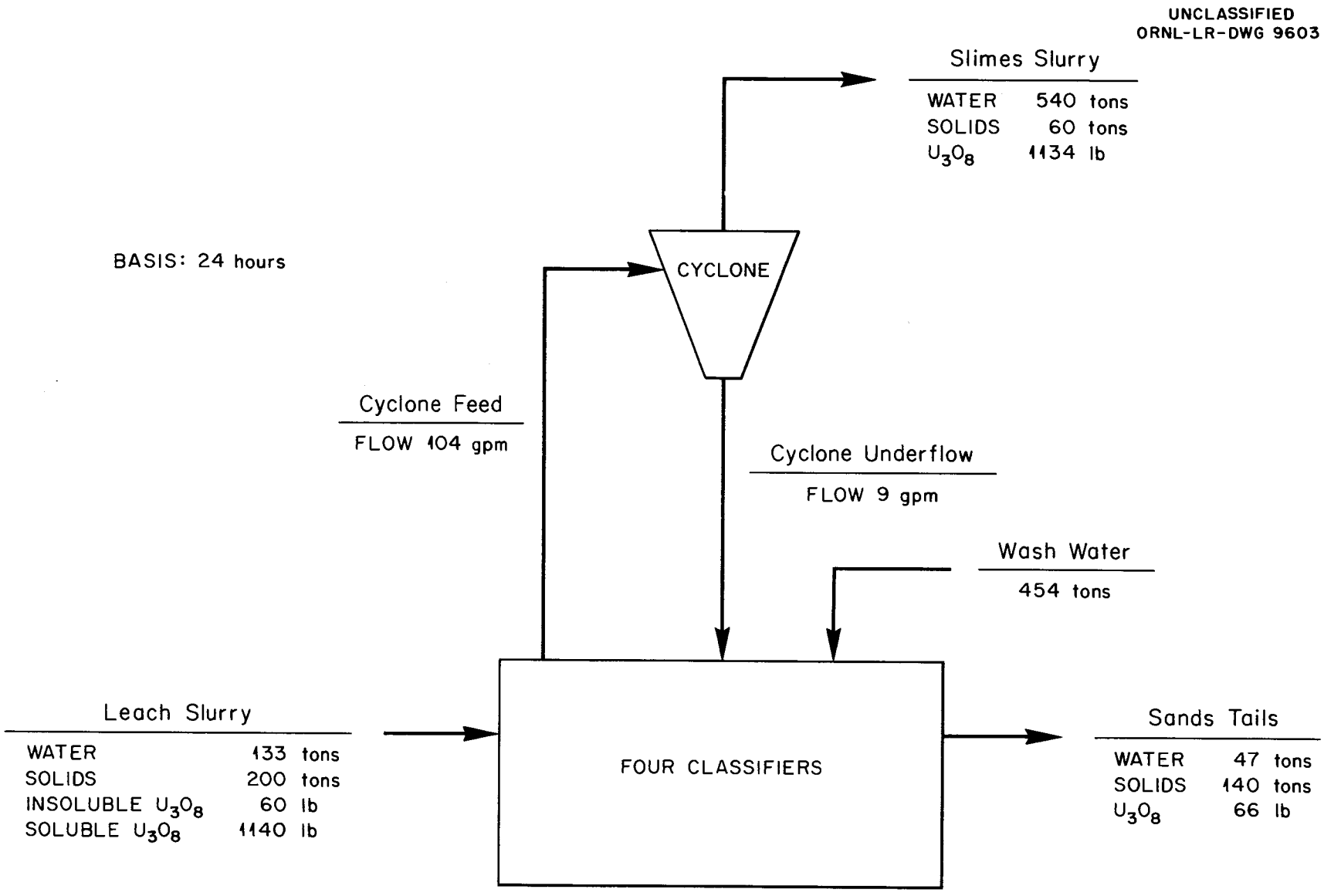

Fig. 24. Sands–Slimes Separation, Materials Flow Diagram.

TABLE 36. COST OF SANDS-SLIMES SEPARATION

	Cost Per Day	Cost Per Pound of U_3O_8
Labor		
Operating 1/	$ 27.00	$0.024
Maintenance 2/	11.94	0.011
Supplies		
Operating 3/	-	-
Maintenance 4/	14.92	0.013
Utilities		
Electricity	5.28	0.005
Total Operating Cost	$ 59.14	$0.053
Amortization 5/	59.69	0.053
Total	$118.83	$0.106

1/ Three men per shift.

2/ Four percent of the total construction cost per 360-day year (see Table 37).

3/ None used.

4/ Five percent of the total construction cost per 360-day year (see Table 37).

5/ Twenty percent of the total construction cost per 360-day year (see Table 37).

TABLE 37. COST OF SANDS-SLIMES SEPARATION FACILITY

A.	Cost of installed process equipment 1/	$ 55,316
B.	Other direct costs	
	Process Piping (7% of A)	3,872
	Instrumentation (3% of A)	1,659
	Electrical wiring 2/	1,000
	Building (113,440 cu ft) 3/	15,000
	Footings and foundations (5% of A)	2,766
	Painting and scaffolding (2% of A)	1,106
C.	Total direct costs	$ 80,719
D.	Engineering and field expense (10% of C)	8,072
E.	Contingency [10% of (C+D)]	8,879
F.	Contractor's fee and overhead [10% of C+D+E)]	9,767
G.	Total construction cost	$107,437

1/ Includes material, labor, and freight (see Table 38).

2/ Includes lighting, equipment, and instrumentation.

3/ Does not include lighting or sanitary facilities.

TABLE 38. INSTALLED PROCESS EQUIPMENT COSTS,

SANDS-SLIMES SEPARATION

Item No.	No. Req'd*	Description	Installed Equipment Cost
CL-1	4	Classifier, 30-in. screw type, acid-proof construction	$30,908
P-11	2	Liquid cyclone feed pump, rubber lined, 115 gpm	2,240
P-12	6	Classifier overflow pump, rubber lined, 95 gpm	5,868
CL-15	1	Liquid cyclone	1,300
BC-20	1	Belt conveyor, 24-in.	15,000
		Total	$55,316

*Includes spares where necessary.

TABLE 39. CRITERIA, SANDS-SLIMES SEPARATION

Soluble uranium loss in tails . . .	0.5% of U_3O_8 in the ore
Leach slurry density	60% solids by weight
Mesh separation in classifier . . .	100 mesh
Classifier discharge (sand)	75% solids
Slime slurry density	10% solids

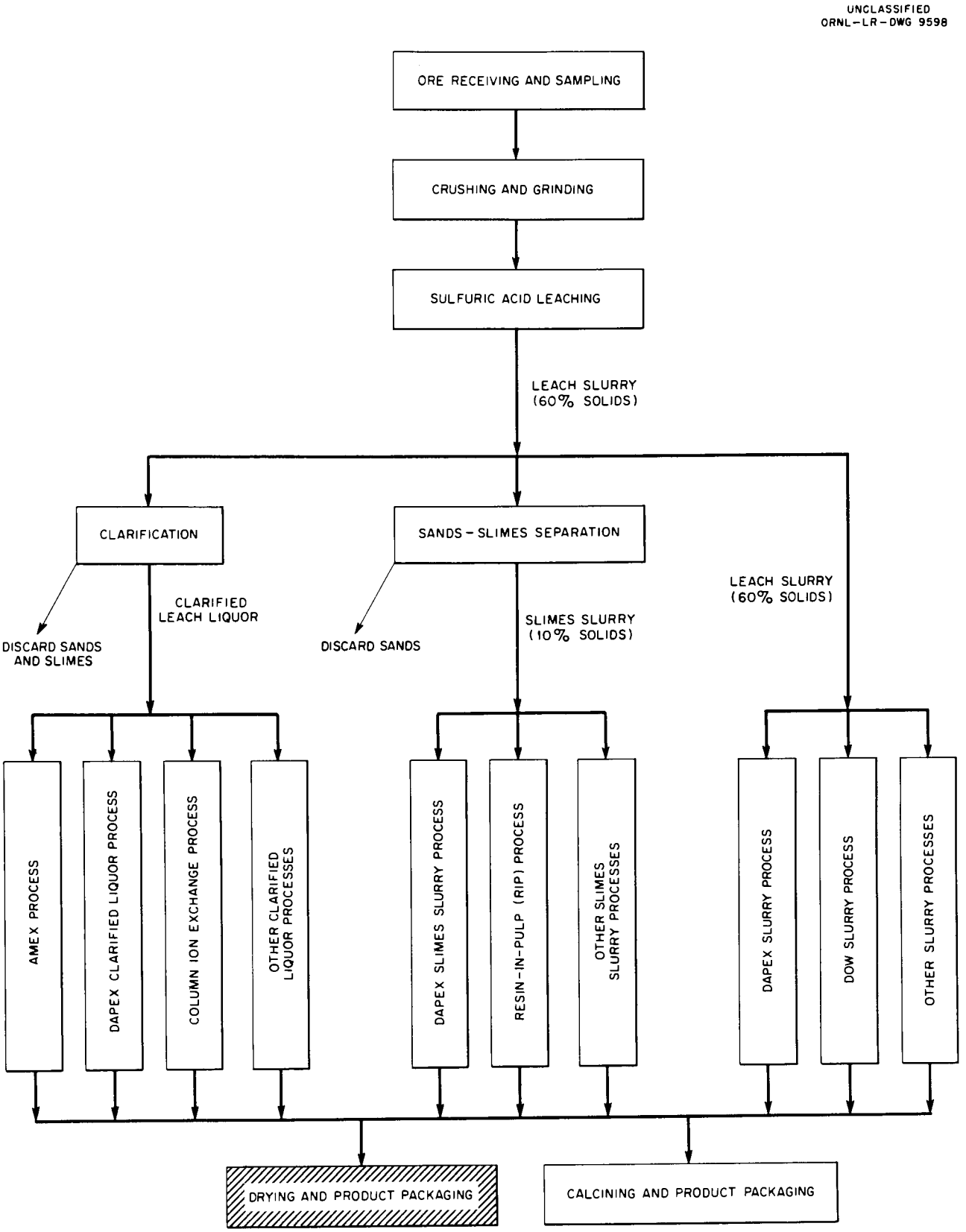

Fig. 25. Relationship between Drying and Product Packaging Process and Other Processes.

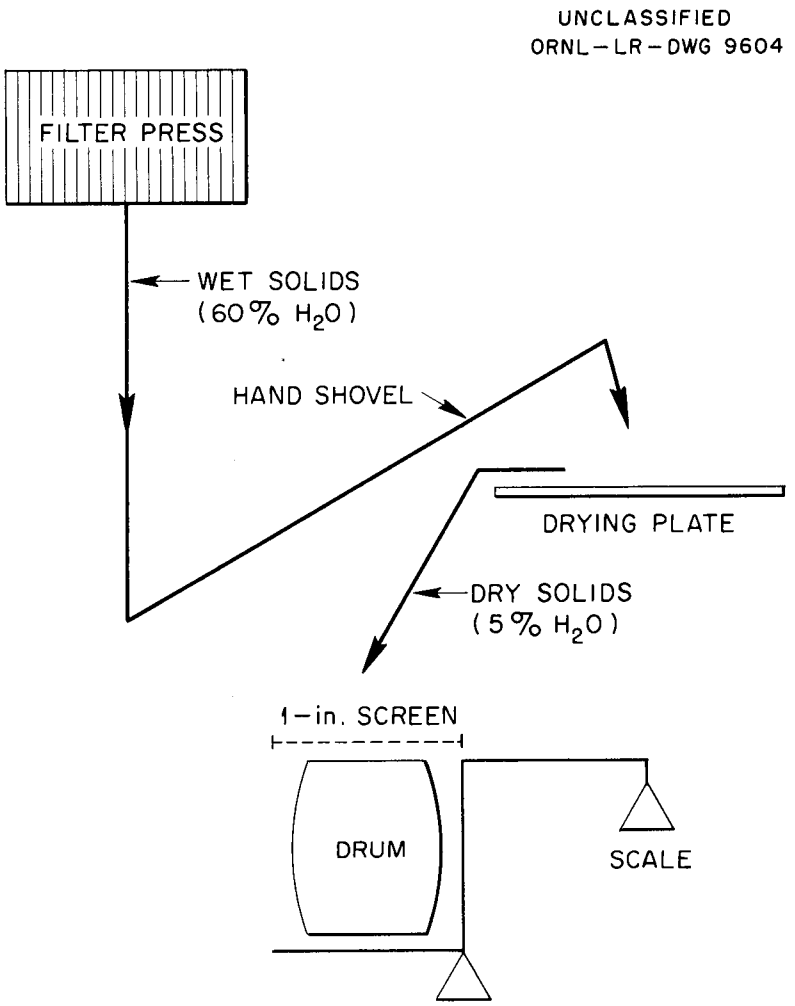

Fig. 26. Drying and Product Packaging, Process and Equipment Flow Diagram.

TABLE 40. COST OF DRYING AND PRODUCT PACKAGING

	Cost per Day	Cost Per Pound of U_3O_8
Labor		
Operating 1/	$ 6.75	$0.006
Maintenance 2/	1.43	0.001
Supplies		
Operating Barrels	19.98	0.018
Maintenance 3/	1.78	0.002
Utilities		
Steam	4.05	0.004
Electricity	0.14	0.000
Total Operating Costs	$34.13	$0.031
Amortization 4/	7.13	0.006
Total	$41.26	$0.037

1/ One man-hour per shift.

2/ Four percent of the total construction cost per 360-day year (see Table 41).

3/ Five percent of the total construction cost per 360-day year (see Table 41).

4/ Twenty percent of the total construction cost per 360-day year (see Table 41).

TABLE 41. COST OF DRYING AND PRODUCT PACKAGING FACILITY

A.	Cost of Installed Process Equipment 1/	$ 5,990
B.	Other Direct Costs	
	Process Piping (7% of A)	420
	Instrumentation (3% of A)	180
	Electrical Wiring 2/	30
	Building (1300 cu ft) 3/	2,600
	Footings and Foundations (5% of A)	300
	Painting and Scaffolding (2% of A)	120
C.	Total Direct Costs	$ 9,640
D.	Engineering and Field Expense (10% of C)	964
E.	Contingency [10% of C+D)]	1,060
F.	Contractor's Fee and Overhead [10% of C+D+E)]	1,166
G.	Total Construction Cost	$12,830

1/ Includes material, labor, and freight (see Table).

2/ Includes lighting, equipment, and instrumentation.

3/ Does not include lighting and sanitary facilities.

TABLE 42. INSTALLED PROCESS EQUIPMENT COSTS DRYING AND PRODUCT PACKAGING

Description	Installed Equipment Cost
Steam drying table	$4,500
Scale, printing (0-1000 lbs)	1,490
Total	$5,990

TABLE 43. CRITERIA,

DRYING AND PRODUCT PACKAGING

Filter cake as received - - - - - - -	60% water
Steam table dried product - - - - - -	5% water
Product packaged - - - - - - - - - - -	350 pounds per barrel

It is estimated that a drying and product packaging facility would cost $12,830 and that the total of direct operating costs plus amortization would be $0.037 per lb of U_3O_8 produced. These costs are shown in Tables 40 and 41. The installed costs of the process equipment are given in Table 42, and the criteria are summarized in Table 43.

CALCINING AND PRODUCT PACKAGING (COST ESTIMATE No. 10)

The calcining operation is primarily applicable to the processing of filter cakes which have been precipitated using ammonia. The relationship between the calcining and product packaging and other processes is shown in Fig. 27.

The calcining and product packaging process is shown in Fig. 28. The wet uranium product filter cake from the extraction process is reslurried with water and fed to a roaster in which it is calcined and then cooled. The cooled product is then packaged for shipment in steel drums.

It is estimated that a calcining and product packaging facility would cost $32,346 and that the total of the direct operating costs plus amortization would be $0.055 per lb of U_3O_8 produced. These costs are shown in Tables 44 and 45. The installed costs of the process equipment are given in Table 46, and the bases are summarized in Table 47.

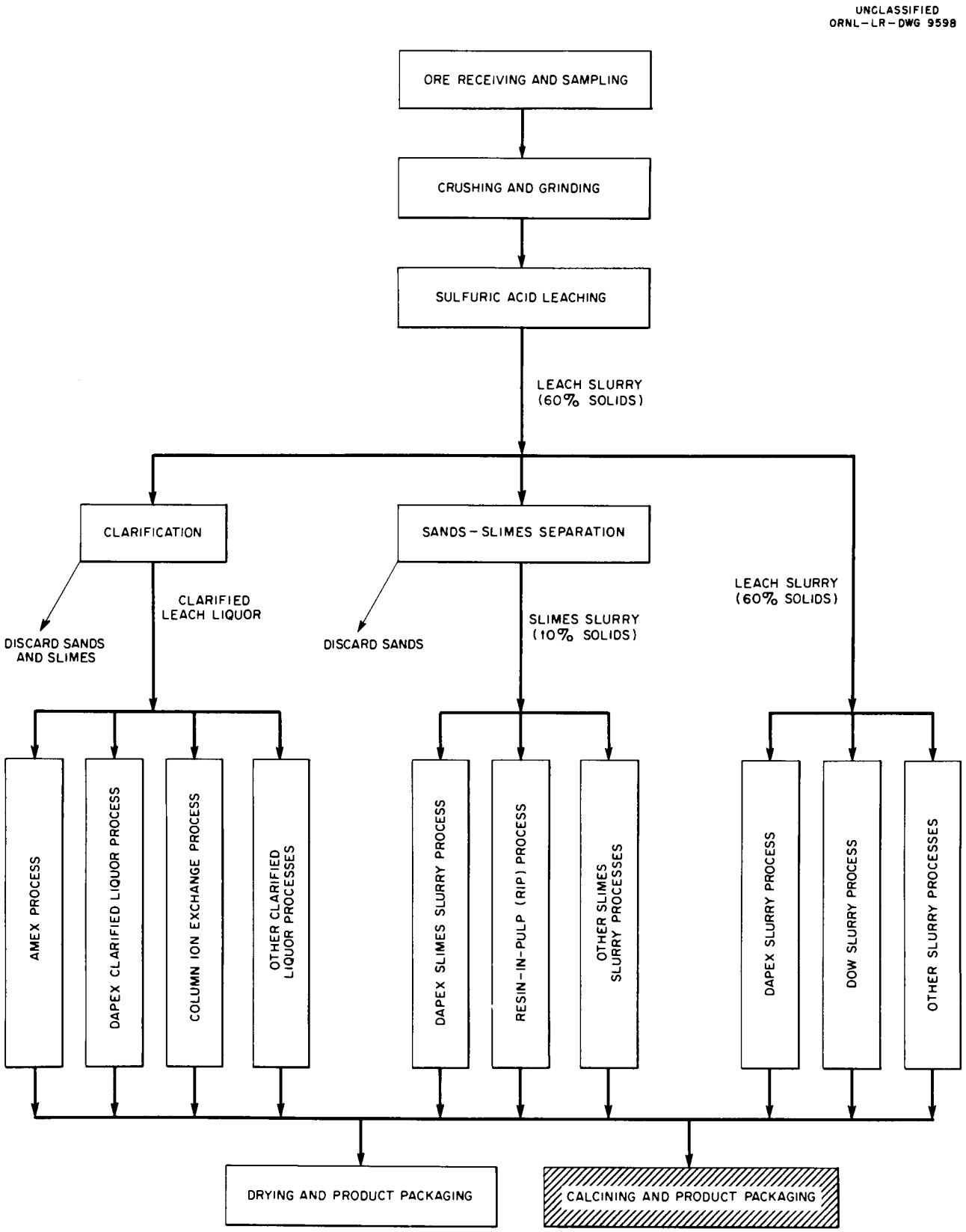

Fig. 27. Relationship between Calcining and Product Packaging Process and Other Processes.

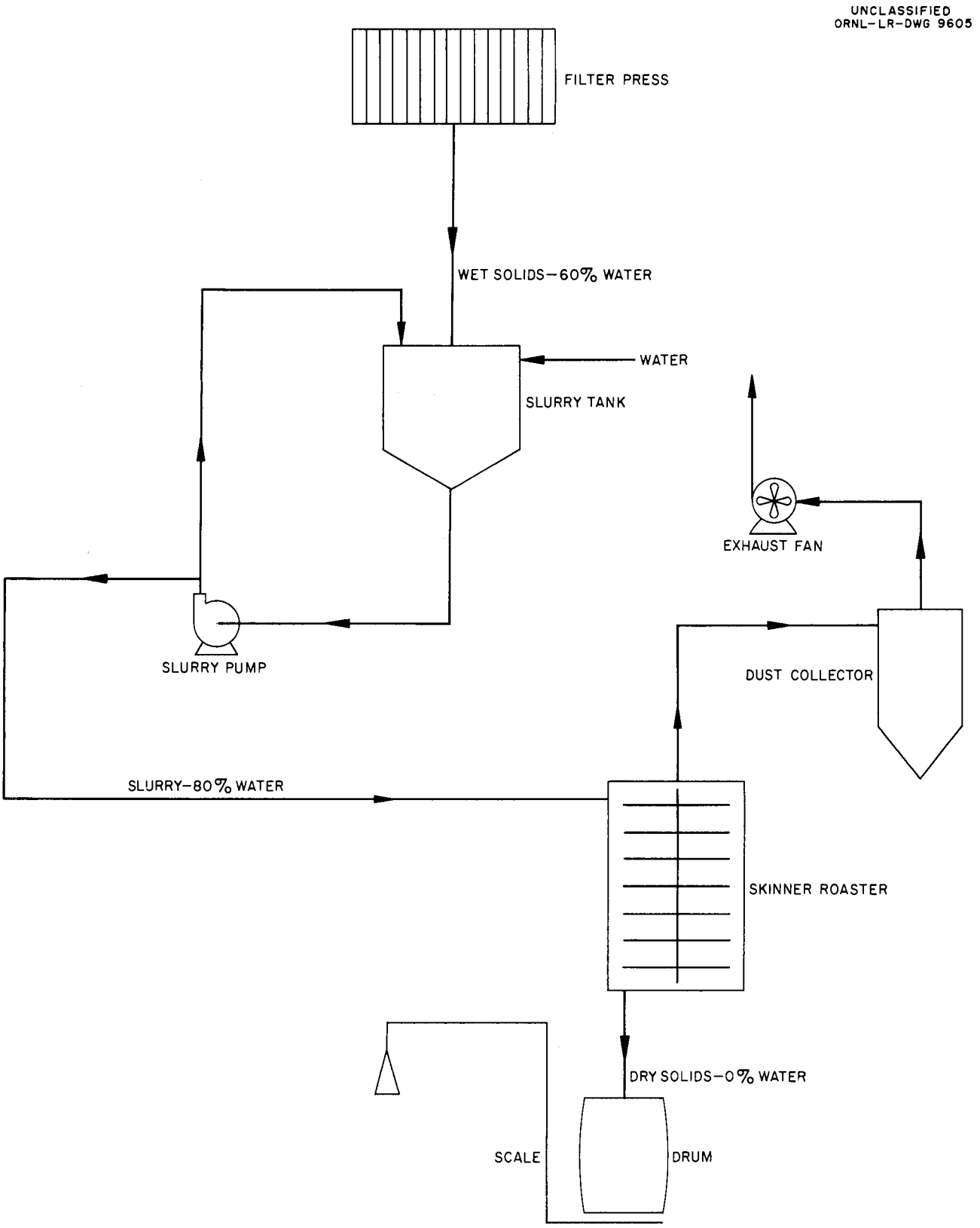

Fig. 28. Calcining and Product Packaging, Process and Equipment Flow Diagram.

TABLE 44. COST OF CALCINING AND PRODUCT PACKAGING

	Cost Per Day	Cost Per Pound of U_3O_8
Labor		
Operating 1/	$ 6.75	$0.006
Maintenance 2/	3.59	0.003
Supplies		
Operating		
Oil 3/	9.68	0.008
Barrels	18.95	0.017
Maintenance 4/	4.49	0.004
Utilities		
Electricity	0.96	0.001
Total Operating Costs	$44.42	$0.039
Amortization 5/	17.97	0.016
Total	$62.39	$0.055

1/ One man-hour per shift.

2/ Four percent of the total construction cost per 360-day year (see Table 45).

3/ 88 gallons of oil per day.

4/ Five percent of the total construction cost per 360-day year (see Table 45).

5/ Twenty percent of the total construction cost per 360-day year (see Table 45).

TABLE 45. COST OF CALCINING AND PRODUCT PACKAGING FACILITY

A.	Cost of Installed Process Equipment 1/	$14,552
B.	Other Direct Costs	
	Process Piping (7% of A)	1,019
	Instrumentation (3% of A)	437
	Electrical Wiring 2/	175
	Building (5,600 cu ft) 3/	7,100
	Footings and Foundations (5% of A)	728
	Painting and Scaffolding (2% of A)	291
C.	Total Direct Costs	$24,302
D.	Engineering and Field Expense (10% of C)	2,430
E.	Contingency [10% of (C+D)]	2,673
F.	Contractor's Fee and Overhead [10% of (C+D+E)]	2,941
G.	Total Construction Cost	$32,346

1/ Includes materials, labor, and freight (See Table 46).
2/ Includes lighting, equipment, and instrumentation.
3/ Does not include lighting and sanitary facilities.

TABLE 46. INSTALLED PROCESS EQUIPMENT COSTS, CALCINING AND PRODUCT PACKAGING

Description	Installed Equipment Cost
Slurry Tank	$ 1,066
Pump	510
Skinner Roaster	10,913
Dust Collector	250
Exhaust Fan	325
Scales, Printing (0-1000 lbs)	1,488
Total	$14,552

TABLE 47. CRITERIA,

CALCINING AND PRODUCT PACKAGING

Filter cake (wet cake) as received . . .	60% water
Roaster calcined product	0% water
Product purity (excluding water)	85% U_3O_8
Product packaged	350 pounds per barrel

REFERENCES

1. H. M. McLeod, Jr., et al., Scope of the Raw Materials Cost Evaluation Studies, ORNL-1927, September 8, 1955. Unclassified.

2. K. B. Brown, et al., The Use of Amines as Extractants for Uranium from Acidic Sulfate Liquors: A Preliminary Report, ORNL-1734, May 27, 1954. Secret.

3. K. B. Brown, et al., Further Studies of Amines as Extractants for Uranium from Acid Sulfate Solutions, ORNL-1922, June 24, 1955. Confidential.

4. K. B. Brown, et al., Amine Extraction Processes for Recovery of Uranium from Sulfate Liquors, ORNL-1959, October, 1955. Unclassified.

5. H. M. McLeod, Jr., et al., Raw Materials Process Testing Program Semiannual Progress Report, July 1, 1954 to December 31, 1954, ORNL-1914, July 13, 1955. Secret.

6. H. M. McLeod, Jr., et al., Progress Report of Pilot Plant Section, Raw Materials Process Testing, January, 1955, ORNL-1970, September 28, 1955. Confidential.

7. K. B. Brown, et al., The Extraction and Recovery of Uranium (and Vanadium) from Acid Liquors with (Di(2-ethylhexyl)phosphoric Acid and Other Organophosphorous Acids, ORNL-1903, May 13, 1955. Confidential.

8. K. B. Brown, et al., Solvent Extraction of Uranium (and Vanadium) from Acid Liquors with Trialkylphosphine Oxides, ORNL-1964, August 26, 1955. Unclassified.

APPENDIX A

DEFINITION OF TERMS

Terminology used in this report is in some cases unique, and in other cases more or less trade terminology is used. In either case definitions for these terms are given below.

Amex Process--Solvent extraction of uranium using amine extractants followed by appropriate stripping and precipitation steps.

Calcining--Incineration of the wet product filter cake to remove water and form uranium oxide product.

Clarification--The operation of removing the sands and slimes from leach slurry to form clarified leach liquor.

Clarified Leach Liquor--The solution remaining after the removal of both the sands and slimes from the leach slurry.

Dapex Process--Solvent extraction of uranium using di-alkyl phosphoric acid extractants followed by appropriate stripping and precipitation steps.

Dow Process--Solvent extraction of uranium using monoalkyl phosphoric acid as the extractant followed by appropriate stripping and precipitation steps.

Drying--The removal of water from the wet product filter cake at relatively low temperatures.

Extraction--The removal of uranium from the aqueous phase of a leach slurry, slimes slurry, or clarified leach liquor by an organic phase.

Leach Slurry--The slurry resulting from sulfuric acid leaching of ores. It is assumed to contain 50% to 60% solids composed of both the sands and slimes fraction of the ore.

Organic Phase--A solution of extractant in a diluent which may be modified by other additives.

Precipitation--The conversion of the uranium in the loaded aqueous strip solution to a precipitate and the subsequent filtration and recovery of this precipitate.

R.I.P. Process--Extraction of uranium from slimes-slurries using ion exchange resins in moving baskets followed by appropriate stripping (eluting) and precipitation steps.

Sands-Slimes Separation--The operation of removing the sands from a leach slurry to form a slimes-slurry.

Slimes--A portion of the ore generally clay-like in structure and smaller than 100 mesh. This ore fraction (particularly in sandstone-type ores) usually contains most of the uranium.

Slimes-Slurry--The slurry remaining after removing the sands from the leach slurry. It is assumed to contain 5% to 10% solids composed only of slimes.

Slurry--This term is used synonymously with leach slurry.

Stripping--The removal of uranium from the loaded organic phase by an aqueous stripping agent.

APPENDIX B--PRICES OF OPERATING SUPPLIES AND UTILITIES AT GRAND JUNCTION, COLORADO

Amine, Rohm and Haas 9D-178, lb	$0.85
Ammonia, anhydrous, lb	0.0575
Barrels, steel, each	5.00
Capryl alcohol (95%), lb	0.2046
Di(2-ethylhexyl)phosphoric acid, lb	0.6146
Dow Separan 2610, lb	1.06
Fuel oil, No. 2, lb	0.11
Iron, powdered, lb	0.0655
Kerosene, gal	0.14
Sodium carbonate, lb	0.0225
Sodium chloride, lb	0.0075
Sulfuric acid (98%), lb	0.0150
Sulfuric acid (66° Be), lb	0.0143
Tributyl phosphate, lb	0.53
Electricity, kwh	0.011
Steam, 1000 lb	0.90