UNCLASSIFIED

CENTRAL RESEARCH LIBRARY
DOCUMENT COLLECTION

MARTIN MARIETTA ENERGY SYSTEMS LIBRARIES
3 4456 0350280 4

ORNL-2122
Metallurgy and Ceramics cy. 4

IMPACT BEHAVIOR OF THORIUM

J. A. Milko

CENTRAL RESEARCH LIBRARY
DOCUMENT COLLECTION

LIBRARY LOAN COPY

DO NOT TRANSFER TO ANOTHER PERSON

If you wish someone else to see this document, send in name with document and the library will arrange a loan.

OAK RIDGE NATIONAL LABORATORY
OPERATED BY
UNION CARBIDE NUCLEAR COMPANY
A Division of Union Carbide and Carbon Corporation
UCC
POST OFFICE BOX P · OAK RIDGE, TENNESSEE

UNCLASSIFIED

Printed in USA. Price 20 cents. Available from the

Office of Technical Services
U. S. Department of Commerce
Washington 25, D. C.

LEGAL NOTICE

This report was prepared as an account of Government sponsored work. Neither the United States, nor the Commission, nor any person acting on behalf of the Commission:

A. Makes any warranty or representation, express or implied, with respect to the accuracy, completeness, or usefulness of the information contained in this report, or that the use of any information, apparatus, method, or process disclosed in this report may not infringe privately owned rights; or

B. Assumes any liabilities with respect to the use of, or for damages resulting from the use of any information, apparatus, method, or process disclosed in this report.

As used in the above, "person acting on behalf of the Commission" includes any employee or contractor of the Commission to the extent that such employee or contractor prepares, handles or distributes, or provides access to, any information pursuant to his employment or contract with the Commission.

ORNL-2122
Metallurgy and Ceramics

Contract No. W-7405-eng-26

METALLURGY DIVISION

IMPACT BEHAVIOR OF THORIUM

J. A. Milko

DATE ISSUED

SEP 5 1956

OAK RIDGE NATIONAL LABORATORY
Operated by
UNION CARBIDE NUCLEAR COMPANY
A Division of Union Carbide and Carbon Corporation
Post Office Box P
Oak Ridge, Tennessee

INTERNAL DISTRIBUTION

1. C. E. Center
2. Biology Library
3. Health Physics Library
5. Central Research Library
6. Metallurgy Library
7. Reactor Experimental Engineering Library

8-27. Laboratory Records Department

28. Laboratory Records, ORNL R.C.
29. A. M. Weinberg
30. L. B. Emlet (K-25)
31. J. P. Murray (Y-12)
32. J. A. Swartout
33. E. H. Taylor
34. E. D. Shipley
35. M. L. Nelson
36. W. H. Jordan
37. C. P. Keim
38. J. H. Frye, Jr.
39. R. S. Livingston
40. R. R. Dickison
41. S. C. Lind
42. F. L. Culler
43. A. H. Snell
44. A. Hollaender
45. M. T. Kelley
46. K. Z. Morgan
47. J. A. Lane
48. T. A. Lincoln
49. A. S. Householder
50. C. S. Harrill
51. C. E. Winters
52. D. S. Billington
53. D. W. Cardwell
54. W. D. Manly
55. E. M. King
56. A. J. Miller
57. D. D. Cowen
58. R. A. Charpie
59. M. L. Picklesimer
60. M. J. Skinner
61. G. E. Boyd
62. C. J. McHargue
63. J. A. Milko
64. N. J. Grant (consultant)
65. E. Creutz (consultant)
66. T. S. Shevlin (consultant)
67. ORNL - Y-12 Technical Library, Document Reference Section

EXTERNAL DISTRIBUTION

68. R. F. Bacher, California Institute of Technology
69. Division of Research and Development, AEC, ORO

70-745. Given distribution as shown in TID-4500 under Metallurgy and Ceramics category (300 copies - OTS)

DISTRIBUTION PAGE TO BE REMOVED IF REPORT IS GIVEN PUBLIC DISTRIBUTION

MARTIN MARIETTA ENERGY SYSTEMS LIBRARIES
3 4456 0350280 4

TABLE OF CONTENTS

Page

ABSTRACT
INTRODUCTION 1
EXPERIMENTAL WORK 2
Impact Testing Machine Used 2
Figure 1, Photograph of Testing Machine..... 3
Type of Test Specimen and Its Dimensions..... 2
Figure 2, Sketch of Specimen..... 4
Procedure of Conducting the Impact Tests..... 5
Composition and Treatment of Test Materials 5
RESULTS 6
Impact Properties of Iodide Thorium 6
Figure 3, Effect of Temperature on the Impact Properties of Iodide Thorium..... 10
Impact Properties of Iodide Thorium-Carbon Alloys..... 6
Figure 4, Effect of Carbon Content on the Impact Properties of Iodide thorium 10
Table 1, Impact Properties of Iodide Thorium and Iodide Thorium-Carbon Alloys..... 7
Table 2, Impact Properties of Iodide Thorium and Iodide Thorium-Carbon Alloys..... 8
Impact Properties of Bomb-Reduced Thorium..... 9
Figure 5, Impact Properties of Bomb-Reduced Thorium..... 10
Table 3, Impact Properties of Bomb-Reduced Thorium as Affected by Test Conditions..... 11
Behavior of Iodide and Bomb-Reduced Thorium Under Impact 9
Figure 6, Comparison of Impact Properties of Iodide and Bomb-Reduced Thorium..... 10
Effect of Aging on the Impact Properties of Bomb-Reduced Thorium..... 9
Table 4, Effect of Aging on the Impact Properties of Bomb-Reduced Thorium..... 12
Effect of Hydrogen Absorption on Impact of Bomb-Reduced Thorium..... 13
Table 5 Effect of Hydrogen on the Impact Properties of Bomb-Reduced Thorium..... 14
CONCLUSIONS..... 15

ABSTRACT

Impact properties were determined on high-purity thorium, bomb-reduced thorium, and pure thorium-carbon alloys. Pure thorium retains its toughness at subzero temperatures similarly as the other face-centered cubic metals, copper, nickel, aluminum, and lead. An addition of carbon to pure thorium results in the presence of a transition temperature in the metal.

Bomb-reduced thorium exhibits a ductile to brittle transition temperature. This transition temperature can be shifted slightly by the impact testing conditions. Apparently, the transition temperature of bomb-reduced thorium results from the presence of impurities in the metal. No indication could be obtained that the aging treatments used, embrittled bomb-reduced thorium in impact. Trends were obtained which suggest that hydrogen may embrittle bomb-reduced thorium at low temperatures.

INTRODUCTION

When an evaluation is made of the behavior of metals and alloys with temperature, usually two broad trends may be observed. One of the perceptible trends is that of a decrease in toughness with a decrease in temperature, for a certain group of metals and alloys. Another group of metals and also certain alloys exhibit virtually no decrease in toughness, but rather show a definite improvement at the lower temperatures.

This latter group consists of metals such as aluminum, copper, nickel, lead, and austenitic stainless steel. Apart from their many distinct differences, these materials have a common characteristic. These materials possess the face-centered cubic structure. It is this face-centered cubic structure that is associated with the retention of toughness at the lower temperatures, particularly as evaluated in the impact test.[1,2] An exception to this observation is the copper antimony face-centered cubic alloy.[3]

Thorium belongs to this group of metals, since its low temperature structure is face-centered cubic. The impact properties of thorium were determined previously.[4] A plot of the impact properties versus temperature disclosed that thorium suffered a loss in toughness in the temperature range of 0 to 180°C. Such a less could not be ascribed with any certainty to the presence of impurities in the thorium. Neither was it possible to state that thorium, a face-centered cubic metal, was an exception to the past observations of retentions of toughness in face-centered cubic metals with decreasing temperature.

The above considerations pointed out the need for a more complete evaluation of the impact properties of thorium. Such an evaluation, it was thought, should not only include data on the high-purity metal, but also data on bomb-reduced thorium, containing known impurities, when tested under similar conditions. In an attempt to associate a particular impurity with the ductile to brittle behavior of thorium, alloys of carbon with pure thorium were prepared and tested. (From previous work, carbon was observed to be an effective alloying addition to thorium.) A preliminary exploration was also made of the effect of hydrogen and aging treatment on the impact properties of bomb-reduced thorium.

(1) P. L. Teed, The Properties of Metallic Materials at Low Temperatures, Chapman and Hall, London, 1950.

(2) Behavior of Metals at Low Temperatures, American Society for Metals, Cleveland, 1953.

(3) The Embrittlement of Copper--Antimony Alloys at Low Temperature, D. McLean, J. Inst. of Metals, V 81, part 3, November 1952, p. 121.

(4) Interim Report on Metallurgy of Thorium and Thorium Alloys, D. E. Hamby, ORNL-1090, December 7, 1951.

EXPERIMENTAL WORK

Impact Testing Machine Used

A small impact testing machine of the Izod type was selected for the impact tests on thorium. This choice was influenced by the availability of a well functioning machine which utilized subsize modified Izod impact test bars. Its salient features were such as to provide a variety of test temperatures, on a limited quantity of costly pure thorium metal.

A view of the impact machine is presented in the photograph of Figure 1. The test specimen is held firmly in a vise, which is actuated by a hydraulic cylinder, that becomes disengaged by a predetermined clamping load. The positioning of the V-notch of the test specimen in relation to the vise and striking pendulum is actuated hydraulically. The proper setting of the V-notch is made by visual observation. A solenoid operated trigger releases the pendulum for impact. A brief but complete description of an earlier model was published earlier.(5)

The temperature of the test specimen was obtained by the application of current to resistors imbedded in the jaws of the vise, for all temperatures above room temperature to approximately 320°C. Temperatures below room temperature were obtained by admitting a mixture of gaseous and liquid nitrogen from a nozzle through valves properly controlled, over the test specimen and jaws. Temperature measurement was made from a copper-constantan thermocouple which was attached to one jaw of the vise, very near the test specimen. Attachment of the thermocouple to the jaw was usually made by spot welding.

Type of Test Specimen and Its Dimensions

It will be recalled that a Standard Izod test specimen is usually a square test piece of 0.394" on a side with a 45° angle V-notch of 0.079" depth and a 0.010" radius at the root of the notch. Such a notch is machined on only one face of the square test piece. An early modification of this type of Izod test specimen was the round, circumferentially notched specimen.(6) As was indicated previously, such a full-scale Izod test specimen was prohibitive in the present investigation, because of the relative scarcity and cost of high-purity thorium. Therefore, the Standard Izod round, circumferentially notched test specimen was modified.

This modification consisted in a change from the large round dimension to a small cylindrical test piece. A 45° angle V-notch was machined circumferentially at 1" intervals along the 10-3/4" length of the test specimen. The multiple-notched 10-3/4" long test piece, had advantages insofar as it utilized a minimum length of material for a notch, and the long length could be fed easily into the jaws with a properly designed hydraulic lift system. Dimensions and specific details of the cylindrical test specimen are shown in the sketch of Figure 2.

(5) Remotely--Operated Impact Tester, W. Pate, E. Hutto and E. Marguerat, Nucleonics V 10, No. 6, 1952, p. 60.

(6) ASTM Standards, Part 1, 1955, p. 1631.

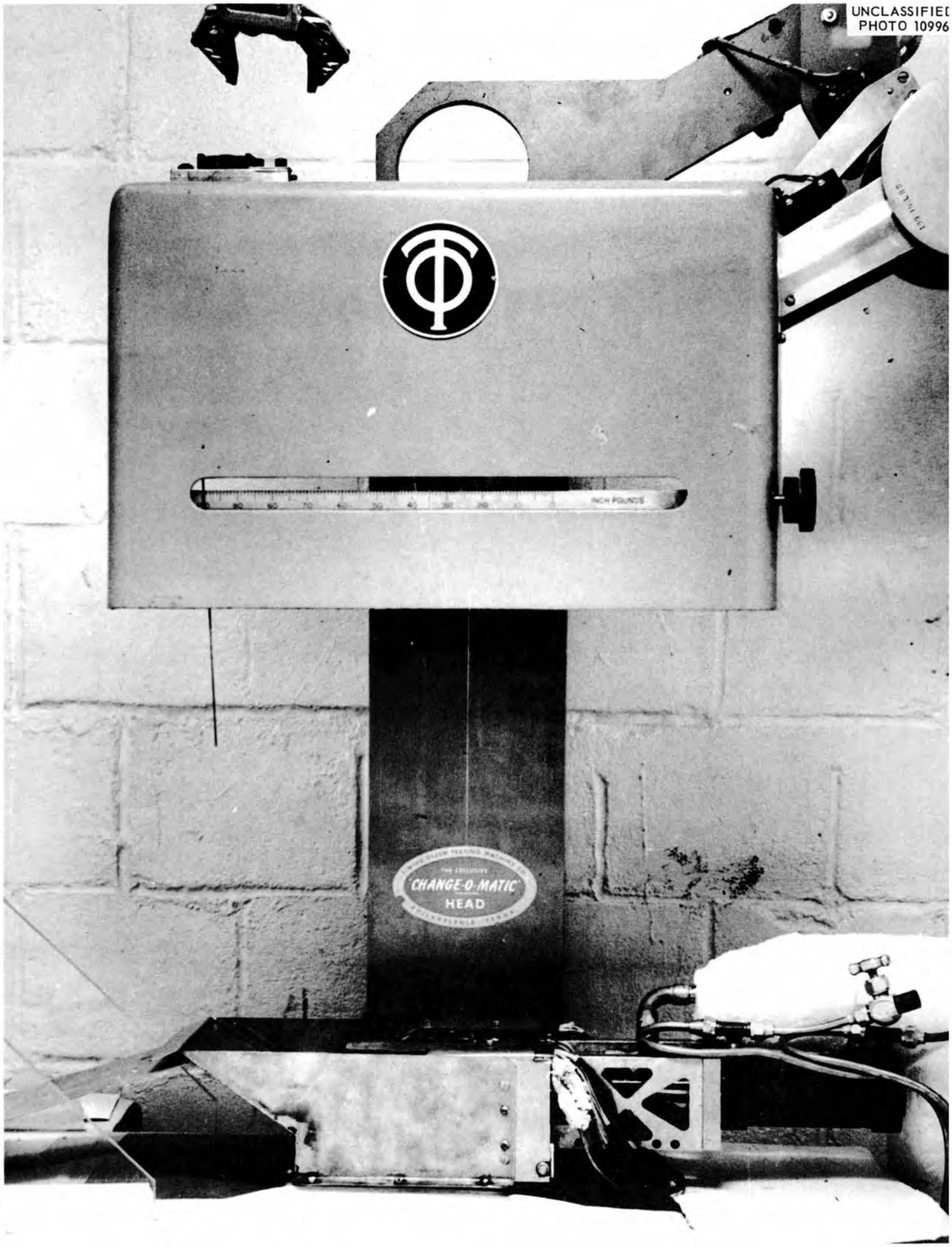

Fig. 1. Modified Impact Machine Used in Testing Subsize Izod Specimens.

UNCLASSIFIED
ORNL-LR-DWG 14796

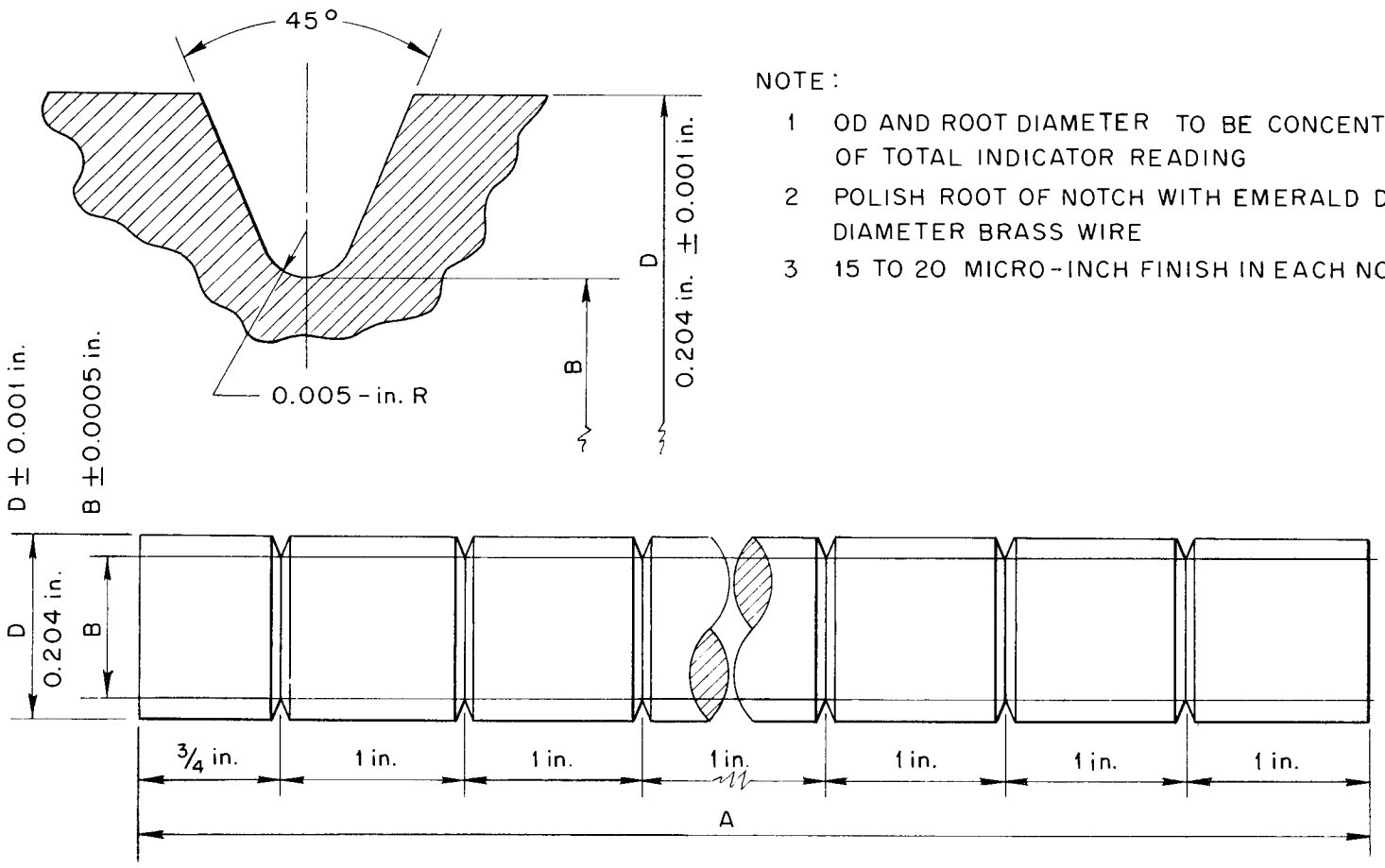

NOTE:

1. OD AND ROOT DIAMETER TO BE CONCENTRIC WITHIN 0.002 in. OF TOTAL INDICATOR READING
2. POLISH ROOT OF NOTCH WITH EMERALD DUST ON 0.010-in. DIAMETER BRASS WIRE
3. 15 TO 20 MICRO-INCH FINISH IN EACH NOTCH

Fig. 2. Dimensions and Details of Sub-Size Izod Impact Specimen.

Procedure of Conducting the Impact Tests

The 10-3/4" long cylindrical test specimen was inserted into the jaws of the vise. After the correct height position was obtained by the hydraulic lift mechanism, the jaws were clamped on the specimen by hydraulic means. When the selected temperature was obtained, the solenoid actuated trigger released the pendulum for the impact.

It should be mentioned at this time, that the pendulum of the testing machine may be modified with interchangeable weights to obtain a striking energy of 25, 50, 100 or 200 inch pounds. The selection of the weight of the pendulum depended not only on the root diameter of the test piece, but also on its ductile to brittle behavior under impact. In general, it was desirable to relate the energy required for fracture rather than to the expendable energy required for partial fracture combined with that of deformation of the unfractured portion.

Composition and Treatment of Test Materials

Two distinct grades of thorium were used. One of these was the highest purity available thorium, obtained from the decomposition of the thorium tetra-iodide in the Van Arkel-de Boer process. Nominal content of impurities that are expected to be present are as follows: C, 0.02 to 0.03; N, O, Si, Be, Al, each considerably less than 0.01 w/o. The other grade was bomb-reduced thorium whose nominal impurity content was as follows: C, 0.03 to 0.05; N, 0.014 to 0.016; Be, 0.013 to 0.02; Ca, Al, Si, Fe, each less than 0.01 w/o.

Both grades were prepared into an appropriate cast form by arc melting in a purified argon atmosphere. The thorium-carbon alloys were remelted at least three times to obtain satisfactory homogeneity. All of the arc castings were cold swaged from an original diameter of about 0.5" to rods of 0.217" diameter. After machining the iodide thorium, the iodide thorium-carbon alloys were vacuum annealed at 650°C for 1/2 hour, whereas the bomb-reduced thorium specimens were annealed for 1/2 hour at 750°C. It was found that these two types of thorium recrystallize at these temperatures.(7) The grain size of these two types of thorium is expected to be as observed earlier.(7)

(7) Recrystallization of Thorium, ORNL-1467, F. H. Eckert and E. J. Boyle, February 18, 1953.

Impact Properties of Iodide Thorium

The curves presented in the plot of Figure 3 illustrate the impact behavior of the relatively pure thorium with temperature. The toughness of the pure metal seems to improve at all temperatures below that of about +50°C. All of the fractures throughout the temperature range investigated were incomplete. The fractures had the characteristic fibrous appearance. Incomplete fractures suggest that a fraction of the impact energy value may be related to the energy absorbed in plastic deformation of a portion of the metal within the vicinity of the notch.

It may be concluded that the relatively pure thorium behaves as a ductile material in the temperature range of -196 to 200°C. No indication could be obtained that the face-centered cubic high-purity thorium undergoes a transition from ductile to brittle behavior within the above temperature range. These observations support previous findings that face-centered cubic materials retain their ductility even at subzero temperatures.

Impact Properties of Iodide Thorium-Carbon Alloys

Alloys having additions of carbon to iodide thorium were investigated for their impact properties, because it was found earlier that this element is a very potent hardener and strengthener of thorium. The impact properties that were obtained on six thorium-carbon alloys are presented in the plot of Figure 4. These same data are also presented in Table 1, along with the intended and analyzed carbon contents of the six alloys.

It is apparent both from Figure 4 and Table 1 that all six thorium-carbon alloys undergo a transition from a ductile to a brittle behavior below about 80°C. Depending on the carbon content, incomplete fractures were obtained at a temperature as low as -50°C to as high as +80°C. Usually a complete fracture was observed to possess a crystalline appearance. An incomplete fracture possessed not only the crystalline but a fibrous appearance. It is pointed out, at this time, that the addition of a small quantity of carbon to the iodide thorium (about 0.02 w/o) shifts the material from a ductile to brittle behavior at the low temperature of -50°C. The perceptible decrease in impact in the temperature range of 100° to 200°C for alloys of 0.05 to 0.15 w/o intended carbon content may be the result of precipitation or aging phenomena. This decrease may also be the result of the characteristic observed loss of strength at elevated temperature.

Impact data are presented in Table 2, on another group of iodide thorium-carbon alloys, investigated earlier. Specimens of this group of alloys had a 0.150" root diameter instead of 0.135", and were tested with a 50 inch pound weight of the pendulum. As may be observed from the data, this combination was ineffective to produce fractures at the higher temperatures. The specimen fractured partially with the remainder undergoing bending. For that reason, a larger weight was used at temperatures above +40°C. Because of a change of testing conditions, the data do not lend themselves to easy plotting. However, in spite of the change, the data appear to be valid, because they do indicate that carbon additions seem to be responsible for the presence of transition temperatures in thorium.

Table 1

Impact Properties of Iodide Thorium and Iodide Thorium-Carbon Alloys
(Root Diameter of 0.135 inches and 200 In. Lb. Wt. of Pendulum)

Composition % C		Impact, Inch Pounds, at Indicated Temperature, °C											
Intended	Analyzed	-196	-100	-50	-20	0	+20	+40	+60	+80	+100	+200	Remarks
*	0.02	65(a)	51(a)	52(a)	-	50(a)	49(b)	44(b)	45(b)	47(b)	46(b)	34(b)	Incomplete fracture at all temperatures.
0.05	0.03	25(b)	35(a)	51(a)	-	65(a)	64(a)	63(b)	60(b)	59(b)	66(b)	45(b)	Complete fracture to -50°C, incomplete beyond this temperature.
0.08	0.06	25(b)	29(b)	35(a)	-	57(b)	68(b)	70(b)	73(b)	77(b)	74(b)	55(b)	Complete fracture to 0°C, incomplete beyond this temperature.
0.10	0.08	17(b)	24(b)	32(b)	42(c)	40(b)	56(b)	72(b)	71(b)	76(b)	76(b)	62(b)	Complete fracture to +20°C, incomplete beyond this temperature.
0.15	0.14	8(b)	14(b)	24(b)	26(c)	30(b)	46(b)	57(b)	64(b)	73(b)	78(b)	67(b)	Complete fracture to +20°C, incomplete beyond this temperature.
0.18	0.15	6(b)	8(b)	12(b)	22(c)	26(b)	31(b)	47(b)	70(b)	75(b)	78(b)	76(b)	Complete fracture to +60°C, incomplete beyond this temperature.
0.22	0.17	2(b)	4(b)	7(b)	10(c)	17(b)	28(b)	29(b)	37(b)	64(b)	80(b)	82(b)	Complete fracture to +80°C, incomplete fracture beyond this temperature.

* No carbon added intentionally.
(a) Average of 3 tests.
(b) Average of 5 tests.
(c) Single test.

Table 2.

Impact Properties of Iodide Thorium and Iodide Thorium-Carbon Alloys
(Root Diameter of 0.150 inches and 50 In. Lb. Wt. of Pendulum)

Composition % C		Impact, Inch Pounds, at Indicated Temperature, °C										Remarks
Intended	Analyzed	-196	-100	-50	0	+20	+40	+60	+80	+100	+200	
*		41	35	28	29	28	32	29(a)	25(b)	23(c)	21(d)	Incomplete fracture at all temperatures.
0.05		25	40	49	49	49	84(e)	81(e)	74(e)	65(e)	39(e)	Complete fracture to +20°C; beyond this temperature, all incomplete fractures.
0.09		11	24	33	40	50	68(e)	83(e)	92(e)	74(e)	53(e)	Complete fracture to +40°C; beyond this temperature, all incomplete fractures.
0.13		7	14	26	46	47	54(e)	64(e)	89(e)	85(e)	60(e)	Complete fracture to +40°C; beyond this temperature, all incomplete fractures.
0.16		8	12	21	39	37	49	50	49	50	48	Complete fracture to +40°C; beyond this temperature, all incomplete fractures.
0.21		1	3	5	15	17	29	42	48	49	49	Complete fracture to +40°C, beyond this temperature, all incomplete fractures.

(a) Test made at 71°C.
(b) Test made at 88°C.
(c) Test made at 104°C.
(d) Test made at 203°C.
(e) Value obtained with 100 In. Lb. pendulum.

Impact Properties of Bomb-Reduced Thorium

A fairly complete investigation was made of the impact properties of bomb-reduced thorium, since there was an ample supply on hand. Four combinations of dimensions and weights of the pendulum were used to establish the real presence or absence of the transition temperature of thorium, containing impurities. Data that were obtained are presented in the curves of Figure 5 and in Table 3.

From Figure 5, it is evident that bomb-reduced thorium exhibits a transition temperature under the testing conditions used. Certain testing conditions apparently are more conducive in isolating the transition than others. For instance, although an incomplete temperature range was covered, the combinations of 0.164" root diameter and the 200 inch pound impact loading indicates the rather steep transition temperature range between 0 and 25°C. On the other hand, the combination of 0.135" root diameter and 50 inch pound impact loading has merely shifted the transition curve. Under these testing conditions, the transition was shifted to between 50 and 100°C, and the steepness of the transition reduced considerably.

The data of Figure 5 appear to be in good agreement with those obtained earlier on full scale Charpy impact test specimens.[3] It follows then that impurities tend to bring about a transition in bomb-reduced thorium.

Behavior of Iodide and Bomb-Reduced Thorium Under Impact

The two curves of Figure 6 illustrate the two types of behavior of the pure and bomb-reduced thorium when tested under identical conditions. It is definite that the pure thorium exhibits comparatively better toughness at the lower temperatures than the bomb-reduced material. Above about 80°C, the bomb-reduced thorium possesses better toughness than the pure material. In composition, these two types of thorium are dissimilar insofar as the impurity content (C, N, O, Be, Si, Fe, Al) of the bomb-reduced material is definitely higher.

Effect of Aging on the Impact Properties of Bomb-Reduced Thorium

As was stated earlier in the text, indications were obtained that precipitation or aging phenomena was responsible for a decrease in impact strength at 200°C. Also previous tests disclosed that the yield point in thorium is either present or absent, depending on the carbon content. These two previous observations prompted an investigation of the impact behavior of thorium as a result of aging. The annealed, machined impact specimens were aged at 200° and 300°C for 25 hours and tested.

The impact properties of unaged and aged bomb-reduced thorium are presented in Table 4. The selected aging treatments did not appear to influence the impact properties as compared to the unaged condition. Perhaps a proper choice of aging time and temperature was not made. For it is well known that embrittling effects of alloys, brought about by aging phenomena, can usually be evaluated satisfactorily by impact testing.

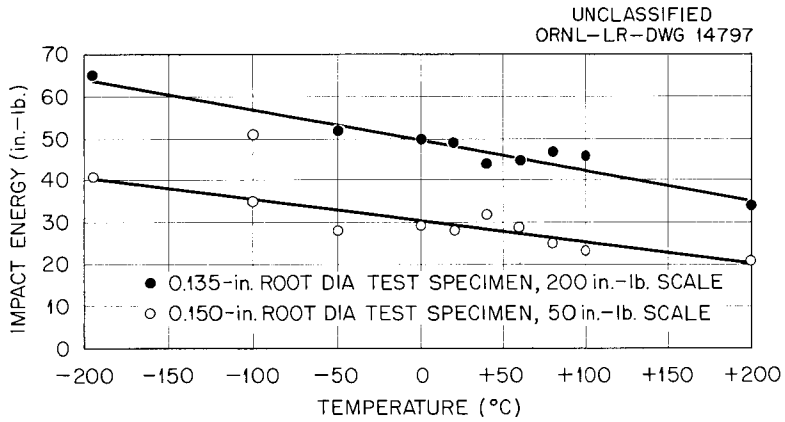

Fig. 3. Effect of Temperature on the Impact Properties of Iodide Thorium.

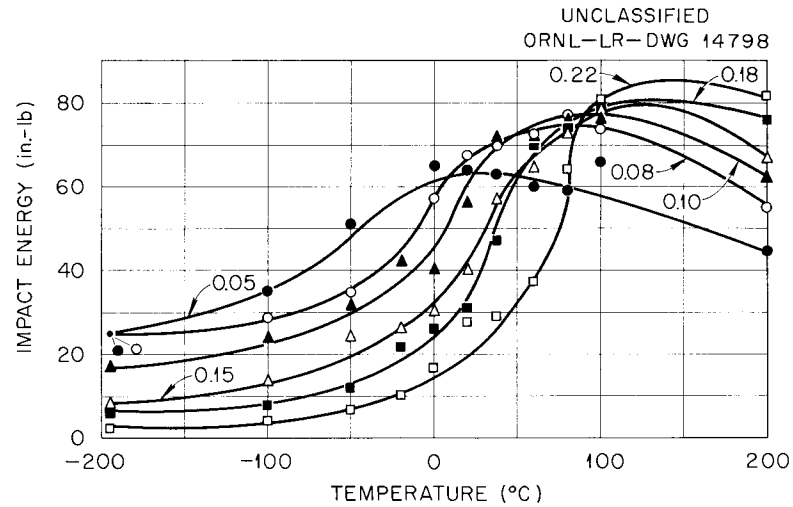

Fig. 4. Effect of Carbon Content on the Impact Properties of Iodide Thorium.

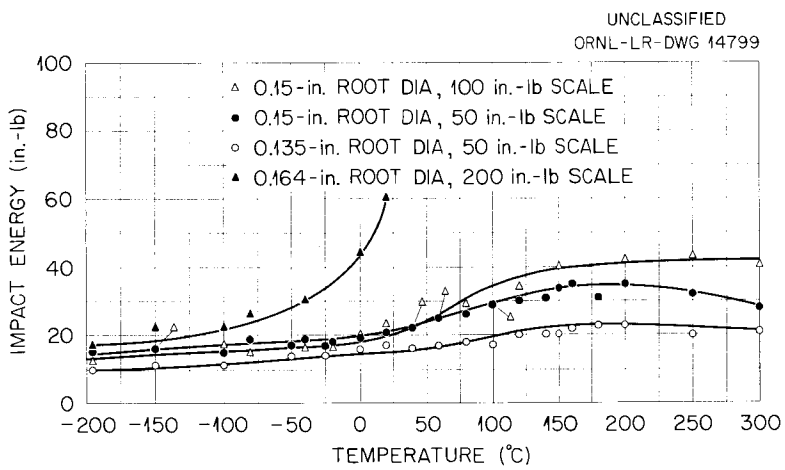

Fig. 5. Impact Properties of Bomb-Reduced Thorium.

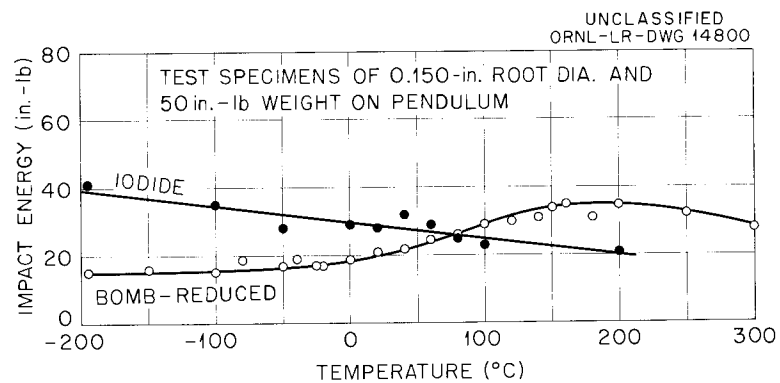

Fig. 6. Comparison of Impact Properties of Iodide and Bomb-Reduced Thorium.

Table 3

Impact Properties of Bomb-Reduced Thorium as Affected by Test Conditions

Sample	Scale of Test Inch Pounds	Root Diam. of Test Bar	Impact, Inch Pounds, at Indicated Temperature, °C																								
			-196	-150	-100	-80	-50	-40	-25	-20	0	20	40	60	80	100	120	140	150	160	180	200	250	290	300	310	320
A691	100	0.150	12 (b)	16 (b)	17 (b)	15 (b)		16 (b)		16 (b)	20 (b)	23 (a)	22 (a)	25 (a)	29 (a)	29 (a)	34 (a)		40 (a)			42 (d)	43 (b)		40 (c)	44 (c)	40 (c)
A691	50	0.150	15 (f)	16 (f)	15 (c)	19 (c)	17 (c)	19 (c)	17 (c)	18 (c)	19 (f)	21 (f)	22 (f)	25 (f)	26 (f)	29 (f)	30 (c)	31 (c)	34 (c)	35 (c)	31 (c)	35 (c)	32 (c)		28 (c)		
A688	50	0.135	10 (c)	11 (c)	11 (c)		14 (c)		14 (c)		16 (c)	17 (c)	16 (c)	17 (c)	18 (c)	17 (c)	20 (c)	20 (c)	20 (c)	22 (c)	23 (c)	23 (c)	20 (c)	21 (c)	21 (c)	20 (d)	20 (c)
A691	200	0.164	17 (e)	22 (e) (g)	22 (e) (h)	26 (e) (i)		30 (e) (g)			44 (l)	60 (l) (k)															

(a) Average of 2 tests.
(b) " " 3 "
(c) " " 4 "
(d) " " 6 "
(e) " " 7 "
(f) " " 8 "
(g) Tested at 126°C.
(h) " " 98°C.
(i) " " 68°C.
(j) " " 37.5°C.
(k) " " 26.5°C.
(l) Single value.

Table 4

Effect of Aging on the Impact Properties of Bomb-Reduced Thorium

Sample	Impact, Inch Pounds, at Indicated Temperature, °C																					Remarks
	-196	-150	-100	-50	-25	0	20	40	60	80	100	120	140	160	180	200	250	290	300	310	320	
A688 Unaged	10	11	11	14	14	16	17	16	17	18	17	20	20	22	23	23	20	21	21(a)	20	20	Complete fractures to 80°C, beyond this temperature, all fractures incomplete. Average of 4 tests.
A688 Aged 25 hrs. at 200°C	9	15	14	14	14	15	15	16	17	17	19			19(b)		23	24		20			Complete fractures to 80°C, beyond this temperature, all fractures incomplete. Average of 2 tests.
A688 Aged 25 hrs. at 300°C	9	14	13	15	15	16	15	19	19	20	18			19(b)		23	22		20			Complete fractures to 80°C, beyond this temperature, all fractures incomplete. Average of 2 tests.

(a) Average of 6 tests.
(b) Tested at 150°C.

Effect of Hydrogen Absorption on Impact of Bomb-reduced Thorium

Speculation concerning the cause of the presence of the transition in thorium centered about the possibility of hydrogen absorption. A partial formation of hydride was expected, which was thought to be effective in embrittling the thorium. To obtain a preliminary likelihood of the effect of hydrogen, several annealed test specimens were placed into the available modified Sievert's apparatus. The specimens were exposed to the hydrogen for 24 hours at 300°C. A change on the measuring device indicated hydrogen absorption.

In Table 5, impact properties are listed for the hydrogen treated and untreated, bomb-reduced thorium. The results are inconclusive. Indications are that hydrogen tends to embrittle thorium as evaluated by the impact test, particularly at temperatures below 60°C. A more comprehensive investigation must be made to evaluate the effect of hydrogen on thorium.

Table 5

Effect of Hydrogen on the Impact Properties of Bomb-Reduced Thorium

Sample	Scale of Test Inch Pounds	Root Diam. of Test Bar	Impact, Inch Pounds, at Indicated Temperature, °C																							
			-196	-150	-100	-50	-31	-29	-26	-25	-22	-20	0	20	40	60	70	80	100	120	140	150	160	180	200	243	279
Untreated *	50	0.150	14	15	15	17				17			18	20	20	23		24	30	30	31		35	31			
Hydrogen Treated **							18	14	18		18	12			18		12		20			32			35	25	23
Untreated ***	200	0.164	17	22	22	28							44	60													
Hydrogen Treated ***	200	0.164	13										26	40		38											

* All values average of 4 tests - complete fractures to +40°C - incomplete fractures beyond this temperature.
** All values average of 2 tests - complete fractures to +150°C - incomplete fractures beyond this temperature.
*** Single value - all incomplete fractures.

CONCLUSIONS

Relatively pure thorium, obtained from the iodide reduction process, behaves as a ductile material even at subzero temperatures. This material does not seem to exhibit a transition temperature. In its behavior, it is similar to the other face-centered cubic metals, copper, nickel, aluminum, and lead, insofar as they likewise do not exhibit a transition when tested in impact. The presence of carbon, even as small an amount as 0.05 w/o, appears to be instrumental in developing a transition in pure thorium.

Bomb-reduced thorium, containing impurities such as C, N, O, Al, Fe, Si, Be, and others, exhibits a transition when tested in impact. Similar behavior was observed in the subsize Izod impact tests, as in the full size Charpy impact tests. In both tests, bomb-reduced thorium exhibited a transition from ductile to brittle behavior in about the same temperature range.

Aging treatments at 200°C and 300°C of bomb-reduced thorium do not seem to indicate any embrittling effects of this material when tested in impact. Indications are that bomb-reduced thorium may become embrittled by hydrogen, as evaluated by the impact test.