[redacted]

CENTRAL RESEARCH LIBRARY
DOCUMENT COLLECTION

AEC RESEARCH AND DEVELOPMENT REPORT

ORNL-2168 cy. 118-A
C-84 - Reactors-Special
Features of Aircraft Reactors

MARTIN MARIETTA ENERGY SYSTEMS LIBRARIES
3 4456 0350332 2

COMPATIBILITY OF PUMP LUBRICANTS WITH ALKALI METALS AND MOLTEN FLUORIDE SALTS

G. Goldberg
A. S. Meyer, Jr.
J. C. White

CENTRAL RESEARCH LIBRARY
DOCUMENT COLLECTION
LIBRARY LOAN COPY
DO NOT TRANSFER TO ANOTHER PERSON
If you wish someone else to see this document, send in name with document and the library will arrange a loan.

OAK RIDGE NATIONAL LABORATORY
OPERATED BY
UNION CARBIDE NUCLEAR COMPANY
A Division of Union Carbide and Carbon Corporation
UCC
POST OFFICE BOX X • OAK RIDGE, TENNESSEE

[redacted]

[redacted]

LEGAL NOTICE

This report was prepared as an account of Government sponsored work. Neither the United States, nor the Commission, nor any person acting on behalf of the Commission:

A. Makes any warranty or representation, express or implied, with respect to the accuracy, completeness, or usefulness of the information contained in this report, or that the use of any information, apparatus, method, or process disclosed in this report may not infringe privately owned rights; or

B. Assumes any liabilities with respect to the use of, or for damages resulting from the use of any information, apparatus, method, or process disclosed in this report.

As used in the above, "person acting on behalf of the Commission" includes any employee or contractor of the Commission to the extent that such employee or contractor prepares, handles or distributes, or provides access to, any information pursuant to his employment or contract with the Commission.

[redacted]

[redacted]

ORNL- 2168

This document consists of 16 pages.
Copy 118 of 231 copies. Series A.

Contract No. W-7405-eng-26

ANALYTICAL CHEMISTRY DIVISION

M. T. Kelley, Director
C. D. Susano, Associate Director

COMPATIBILITY OF PUMP LUBRICANTS WITH ALKALI METALS AND MOLTEN FLUORIDE SALTS

G. Goldberg, A. S. Meyer, Jr., J. C. White

DATE ISSUED

DEC 28 1956

DECLASSIFIED

CLASSIFICATION CHANGED TO:
BY AUTHORITY OF: AEC - 9-18-57
BY: Tom Gries 11-14-57

[redacted]

OAK RIDGE NATIONAL LABORATORY
Operated by
UNION CARBIDE NUCLEAR COMPANY
A Division of Union Carbide and Carbon Corporation
Post Office Box P
Oak Ridge, Tennessee

[redacted]

[redacted]

MARTIN MARIETTA ENERGY SYSTEMS LIBRARIES
3 4456 0350332 2

ORNL-2168
C-84 - Reactors-Special
Features of Aircraft Reactors

INTERNAL DISTRIBUTION

1. R. G. Affel
2. C. J. Barton
3. [illegible] Bender
4. D. S. Billington
5. F. [illegible] Blankenship
6. E. [illegible] Blizard
7. C. [illegible] Borkowski
8. W. [illegible] Boudreau
9. G. [illegible] Boyd
10. M. A. Bredig
11. W. E. Browning
12. F. R. Bruce
13. A. D. Callihan
14. D. W. Cardwell
15. C. E. Center (K-25)
16. R. A. Charpie
17. C. E. Clifford
18. J. H. Cobb
19. W. B. Cottrell
20. D. D. Cowen
21. S. J. Cromer
22. R. S. Cuse
23. F. L. Culler
24. J. H. Decker
25. L. M. Doll
26. D. A. Douglas
27. E. R. Dytner
28. W. K. Eister
29. L. B. Emlet (K-25)
30. D. E. Ferguson
31. A. P. Fraas
32. J. H. Frye, Jr.
33. W. T. Furgerson
34. W. R. Grimes
35. E. E. Hoffman
36. H. W. Hoffman
37. A. Hollaender
38. A. S. Householder
39. J. T. Howe
40. W. H. Jordan
41. G. W. Keilholtz
42. C. P. Keim
43. M. T. Kelley
44. F. Kertesz
45. E. M. King
46. J. A. Lane
47. G. Goldberg
48. R. B. Lindauer
49. R. S. Livingston
50. [illegible] N. Lyon
51. [illegible] C. Maienschein
52. [illegible] D. Manly
53. [illegible] R. Mann
54. [illegible] A. Mann
55. W. [illegible] B. McDonald
56. F. [illegible] R. McQuilkin
57. R. [illegible] V. Meghreblian
58. R. [illegible] P. Milford
59. A. [illegible] J. Miller
60. R. [illegible] Moore
61. J. [illegible] Morgan
62. K. [illegible] Morgan
63. E. [illegible] Murphy
64. J. [illegible] Murray (Y-12)
65. M. L. Nelson
66. G. J. Nessle
67. R. B. Oliver
68. L. G. Overholser
69. P. Patriarca
70. R. W. Peelle
71. A. M. Perry
72. J. C. Pigg
73. H. F. Poppendiek
74. A. E. Richt
75. M. T. Robinson
76. H. W. Savage
77. A. W. Savolainen
78. R. D. Schultheiss
79. E. D. Shipley
80. A. Simon
81. O. Sisman
82. J. Sites
83. M. J. Skinner
84. G. [illegible] Smith
85. A. [illegible] Snell
86. G. [illegible] Susano
87. J. A. Swartout
88. E. H. Taylor
89. R. E. Thoma
90. D. B. Trauger
91. E. R. Van Artsdalen
92. G. M. Watson
93. A. M. Weinberg
94. A. S. Meyer, Jr.

95. [redacted] P. Young
96. [redacted] F. Vaughan
97. [redacted] Peak
98. T. [redacted] Gilbert, Jr.
99. W. [redacted]napp
100. J. C. [redacted]te
101. G. D. W[redacted]an
102. E. P. Wig[redacted] (consultant)
103. J. C. Wilso[redacted]
104. C. E. Winters
[redacted] H. Eyring (consu[redacted])
10[redacted] T. Seaborg (consultant)
107. [redacted]H. Muller (consultant)
108. N. [redacted] Furman (consultant)
109-110. ORNL [redacted]12 Technical Library, Docume[redacted]eference Section
111-115. Laborato[redacted]ecords Department
116. Laboratory [redacted]cords, ORNL R.C.
117-118. Central Research Library

EXTERNAL DISTRIBUTION

119. AF Plant Representative, Baltimore
120. AF Plant Representative, Burbank
121. AF Plant Representative, Marietta
122-124. AF Plant Representative, Santa Monica
125-126. [redacted]F Plant Representative, Seattle
127. [redacted]F Plant Representative, Wood-Ridge
128. [redacted]r Materiel Area
129. A[redacted] Research and Development Command (RDGN)
130. A[redacted] Technical Intelligence Center
131. Al[redacted]on Division
132. Alb[redacted]erque Operations Office
133-135. ANP [redacted]oject Office, Fort Worth
136. Argon[redacted] National Laboratory
137. Armed [redacted]rces Special Weapons Project, Sandia
138. Armed F[redacted]es Special Weapons Project, Washington
139. Assistan[redacted]ecretary of the Air Force, R&D
140-145. Atomic En[redacted]y Commission, Washington
146. Battelle M[redacted]rial Institute
147-148. Bettis Plan[redacted] (WAPD)
149. Bureau of Ae[redacted]autics
150. Bureau of Aer[redacted]utics (Code 24)
151. Bureau of Aero[redacted]tics General Representative
152. Chicago Operati[redacted] Office
153. Chicago Patent G[redacted]p
154. Chief of Naval Re[redacted]rch
155. Convair-General Dy[redacted]ics Corporation
156. Engineer Research a[redacted] Development Laboratories
157-160. General Electric Com[redacted]y (ANPD)
161. Hartford Area Office
162. Headquarters, Air Forc[redacted]pecial Weapons Center
163. Idaho Operations Office
164. Knolls Atomic Power Labo[redacted]ory
165. Lockheed Aircraft Corporat[redacted]n (R. G. Rowe)
166. Lockland Area Office
167. Los Alamos Scientific Labora[redacted]ry
168. National Advisory Committee f[redacted] Aeronautics, Cleveland

16. National Advisory Committee for Aeronautics, Washington
170. Naval Air Development and Material Center
171. Naval Research Laboratory
172. New York Operations Office
173. North American Aviation, Inc. (Aerophysics Division)
174. North American Aviation, Inc. (Canoga Park)
175. Nuclear Development Corporation of America
176. Office of the Chief of Naval Operations (OP-361)
177. Patent Branch, Washington
178-181. Pratt & Whitney Aircraft Division (Fox Project)
182. Sandia Corporation
183. School of Aviation Medicine
184. Sylvania Electric Products, Inc.
185. USAF Project Rand
186. University of California Radiation Laboratory, Livermore
187-204. Wright Air Development Center (WCOSI-3)
205. Technical Research Group, New York
206. Division of Research and Development, AEC, ORO
207-231. Technical Information Service Extension, Oak Ridge

[redacted]

COMPATIBILITY OF PUMP LUBRICANTS WITH ALKALI METALS AND MOLTEN FLUORIDE SALTS

G. Goldberg, A. S. Meyer, Jr., J. C. White

ABSTRACT

This report includes a description of an apparatus and a detailed procedure for testing the compatibility of pump lubricants with alkali metals and molten fluoride salts. Results are given for the reaction between certain pump lubricants at 200° F and molten sodium metal and molten fluoride salts at 1100° F.

[redacted]

[redacted]

COMPATIBILITY OF PUMP LUBRICANTS WITH ALKALI METALS AND MOLTEN FLUORIDE SALTS

G. Goldberg, A. S. Meyer, Jr., J. C. White

This report includes a description of an apparatus for the addition of molten alkali metals and fluoride salts to pump lubricants. The molten metal, or salt, can be heated to temperatures as high as 1400° F; the lubricant can be heated to 400° F. Little decrease occurs in the temperature of the alkali metal, or the fluoride salt, on addition to the lubricant, since the space traversed before the additive comes in contact with the liquid is less than six inches. Additions may be made in an inert atmosphere when necessary, since provision is made to evacuate the apparatus completely. The liquid under test can be changed in a matter of minutes without cooling the molten metal or fluoride salt. Once the apparatus is assembled the flange-plate is removed only to replace the metal or salt in the melt pot.

Apparatus

The apparatus is shown schematically in Figures 1 through 5. Figures 1 and 5 show the apparatus completely assembled with the flange-plate assembly connected to the reaction vessel. The vacuum seal between the plate and the vessel is effected by means of a neoprene gasket. A neoprene gasket is also used to provide a vacuum connection between the cup and the reaction vessel. Standard, glass pipe, flange fittings are used for both connections.

The melt pot and the pot furnace are supported within the reaction vessel on the platform shown in Figure 4. The steel platform support-rods are welded to the underside of the flange plate. The alignment of the melt pot is determined when the overflow tube is inserted into the notched section

[redacted]

of the platform; thus a free movement of the plunger is assured. See Figure 3 for details.

Figure 2 shows the relative positions of the various fittings that make up the flange-plate assembly. The spark plug connectors afford a means of connecting the pot furnace to a Variac controller through a vacuum-tight seal. Bellows-sealed needle valves are used throughout the assembly. Swagelok fittings are welded to the flange-plate.

Since oxygen must be excluded from the reaction vessel when the melt pot contains alkali metals, the Wilson seal[1] is ideally suited for providing an opening into the reaction vessel through which the overflow plunger can be actuated. A series of gaskets within the seal provide a vacuum-tight contact with the drive shaft connected to the plunger. The gear drive can be any type of assembly that will control, to fractions of an inch, the lowering of the plunger into the melt pot. The water-cooled copper coil is used mainly to cool the Wilson seal.

To protect the operator from any unforeseen ruptures of the apparatus, a plexiglass safety shield is used. This shield is a 30-inch section of 8-inch diameter plexiglass pipe. The flange plate rests on the top of the pipe. The base of the pipe is notched to permit the passage of the heating mantle extension. To protect the glass reaction vessel from excessive heat, air at 20 to 30 psi pressure is permitted to flow through the notch. This cold air passes around and up the outside of the reaction vessel. The upper surface of the pipe is also notched to provide an outlet for the heated air.

Procedure

To assemble the apparatus, first pass the drive shaft of the overflow plunger down through the Wilson seal; then connect the shaft to the plunger. Withdraw the shaft until the plunger rests against the flange plate. Position the melt pot in the pot furnace and slip the pot and furnace into place on the support platform. (The melt pot thermocouple is automatically positioned since it is never removed after it has been locked in place.) Rotate the shaft to align the plunger so it can be lowered to the bottom of the pot; then connect the gear track to the plunger drive shaft. Connect the pot furnace leads to the spark plugs to complete the assembly of the flange-plate components.

When loading the melt pot with a fused fluoride salt, it is preferable to use the pulverized form of the salt. Fill the pot almost to the top of the overflow tube through the space between the plunger and the wall of the pot. The pot can be filled in the same manner with coarse pieces of the fused salt, but the working volume of the melt will be considerably less than the volume of the pulverized salt melt.

When loading the melt pot with alkali metals, certain precautions must be taken due to the rapid oxidation of the alkali metals when exposed to air. Where feasible, charge the melt pot under an inert atmosphere in a dry box where the connection of the flange plate to the reaction vessel can be made also. If this operation is not possible, arrange a helium, or argon, gas delivery line so that a stream of the gas is directed into the melt pot during the filling operation. The most convenient way to fill the melt pot

with liquid alkali metal is by means of a valved transfer line from a pot, pressurized with an inert atmosphere, in which the liquid metal is stored. When the melt pot is charged, flush the reaction vessel, to which the oil cup has been connected, with a stream of inert gas, and rapidly connect the flange-plate assembly to the reaction vessel.

When the apparatus has been assembled, connect the Variac leads to the spark plugs, and the vacuum and helium lines to the helium inlet and vacuum valves. Adjust the regulator of the helium cylinder to 1 to 2 psi; then open the helium inlet valve. Disconnect the cup and fill it with 100 ml of the fluid to be tested. Reconnect the cup to the reaction vessel; then close the helium inlet valve. Open the valve that is connected to the vacuum line and evacuate the apparatus to less than 100 microns pressure. Close the vacuum line valve; open the helium inlet valve; then partially open the helium outlet valve to maintain a slow flow of helium through the apparatus. Adjust the Variac to raise the temperature of the material in the melt pot to the desired temperature. Raise the temperature of the fluid to the desired temperature by placing a heating mantle in contact with the cup. Begin the flow of water through the copper cooling coil while the melt pot is being heated. When the desired temperatures are reached, slowly lower the plunger into the melt pot. The plunger will displace the melt in the pot and cause the melt to pass through the overflow tube and drop into the lubricant. Follow the reaction between the molten material and the fluid under test visually and by any temperature changes that are recorded by the thermocouple immersed in the fluid.

When the cup has cooled sufficiently so that it may be handled, the cup can be removed and be replaced by a clean cup containing another sample. The testing procedure can then be repeated until the melt pot is emptied.

Test Results

Five lubricants at a temperature of 200° F were tested for their compatibility with molten sodium and a molten fluoride salt at a temperature of 1100° F. These five lubricants were Dowtherm-A, Cellulube-150, Spin-60, Crest-34, and OS-45. The only reaction that was observed to take place was a rather vigorous reaction between the Cellulube-150 and the molten sodium. No reaction was evident between the Cellulube-150 and the fluoride salt. No visible reactions occurred between each of the other four lubricants and either the sodium or the fluoride salt.

References

1. G. Goldberg, A. S. Meyer, Jr., J. C. White, "The Sampling of Alkali Metal Systems with the Modified MSA Sampler," ORNL-2147, p.2, August 21, 1956.

UNCLASSIFIED
ORNL-LR-DWG. 17078

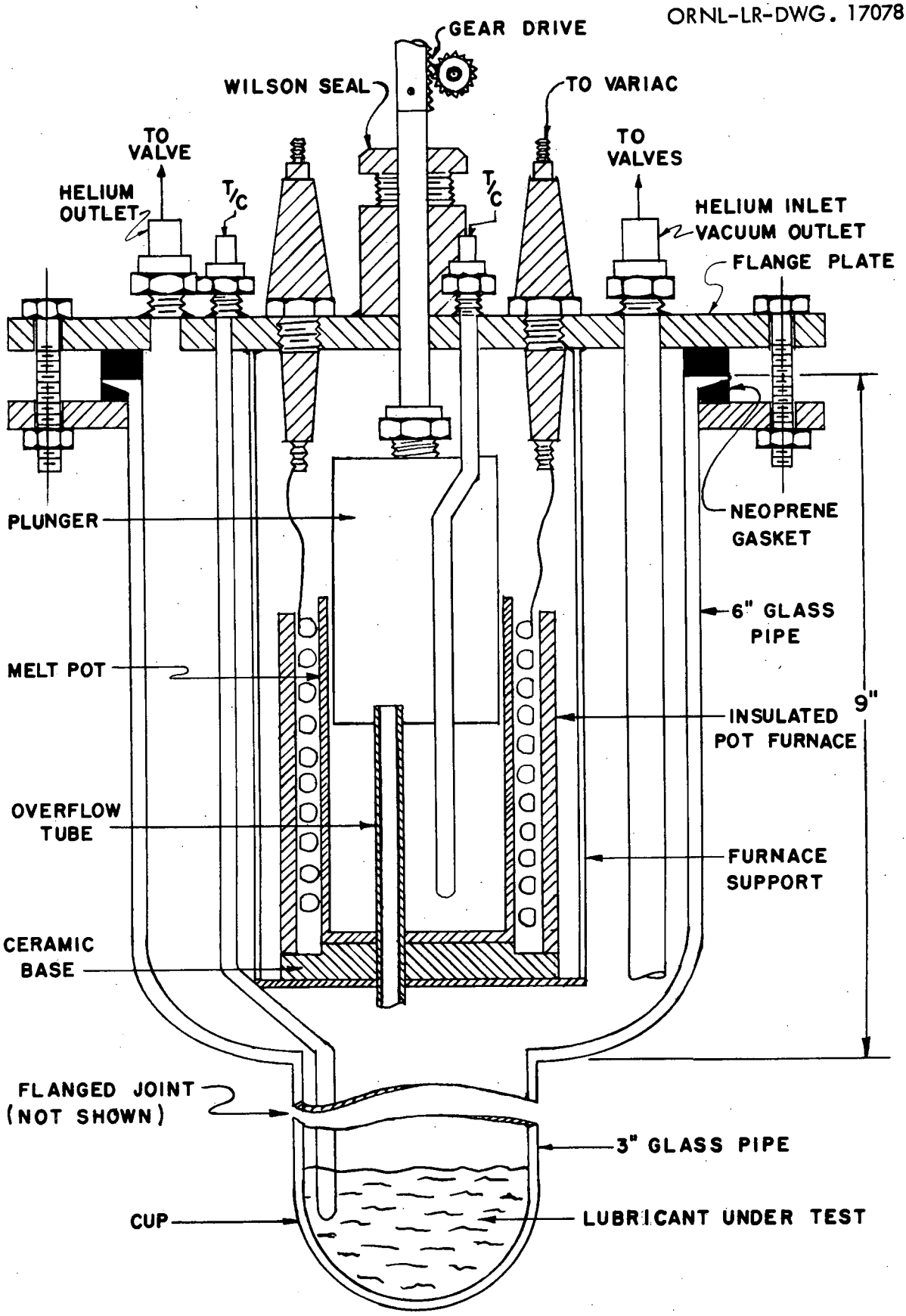

FIGURE 1

APPARATUS FOR TESTING COMPATIBILITY OF LUBRICATING FLUIDS WITH MOLTEN ALKALI METALS & FLUORIDE SALTS

UNCLASSIFIED
ORNL-LR-DWG. 17079

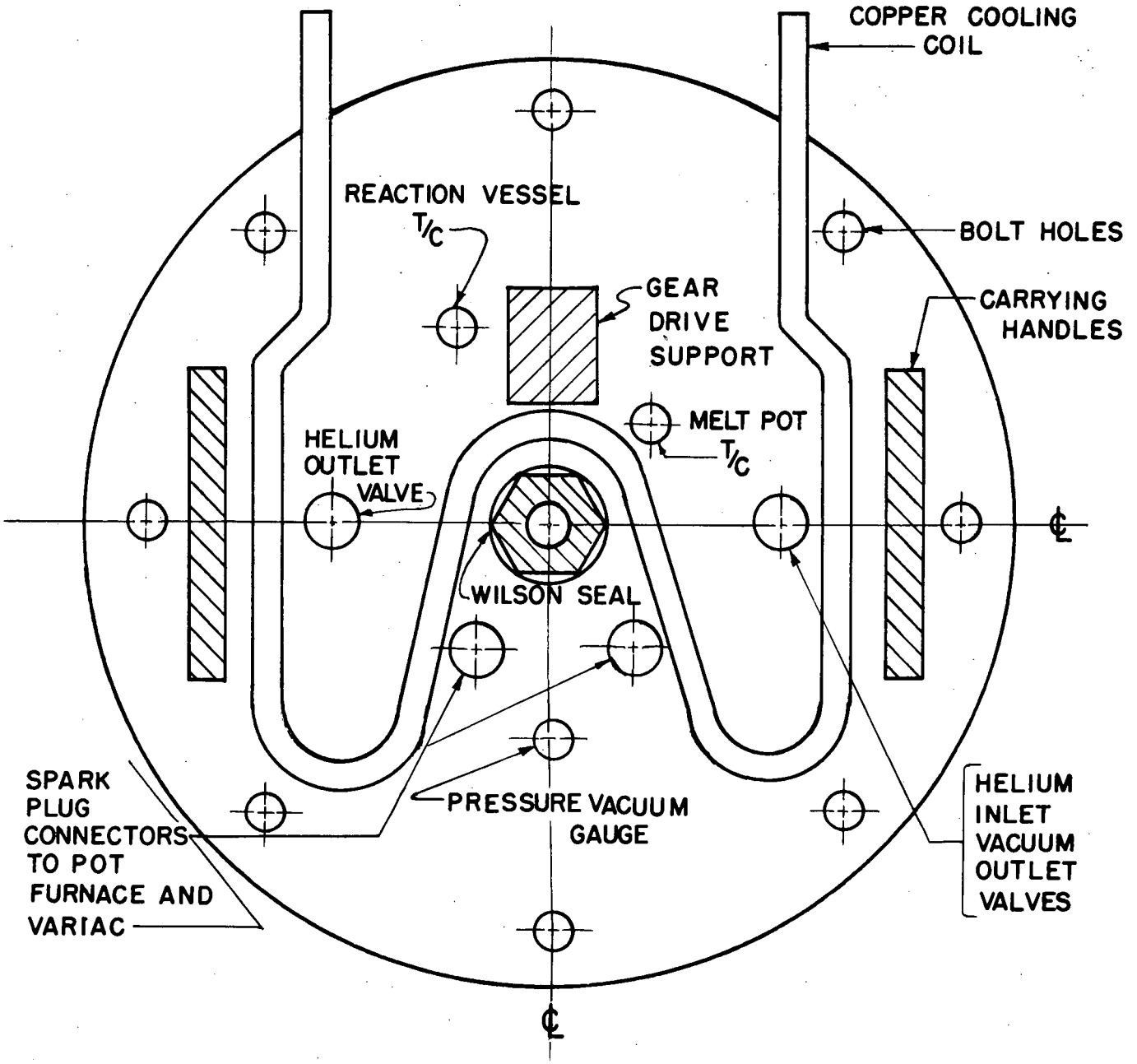

FIGURE 2

FLANGE PLATE ASSEMBLY FOR COMPATIBILITY TESTS

UNCLASSIFIED
ORNL-LR-DWG. 17080

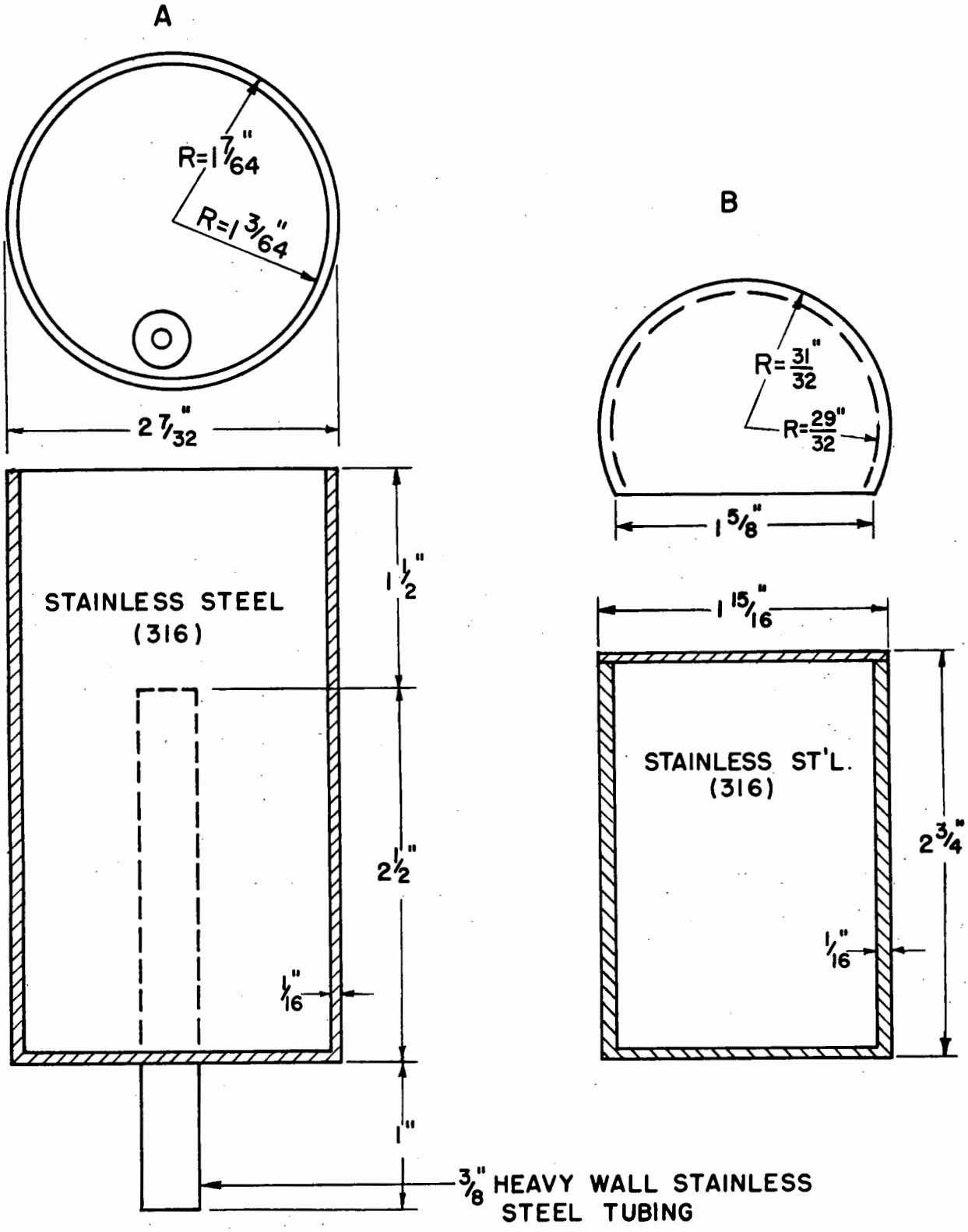

FIGURE 3

SAMPLE MELT POT AND OVERFLOW PLUNGER

UNCLASSIFIED
ORNL-LR-DWG. 17081

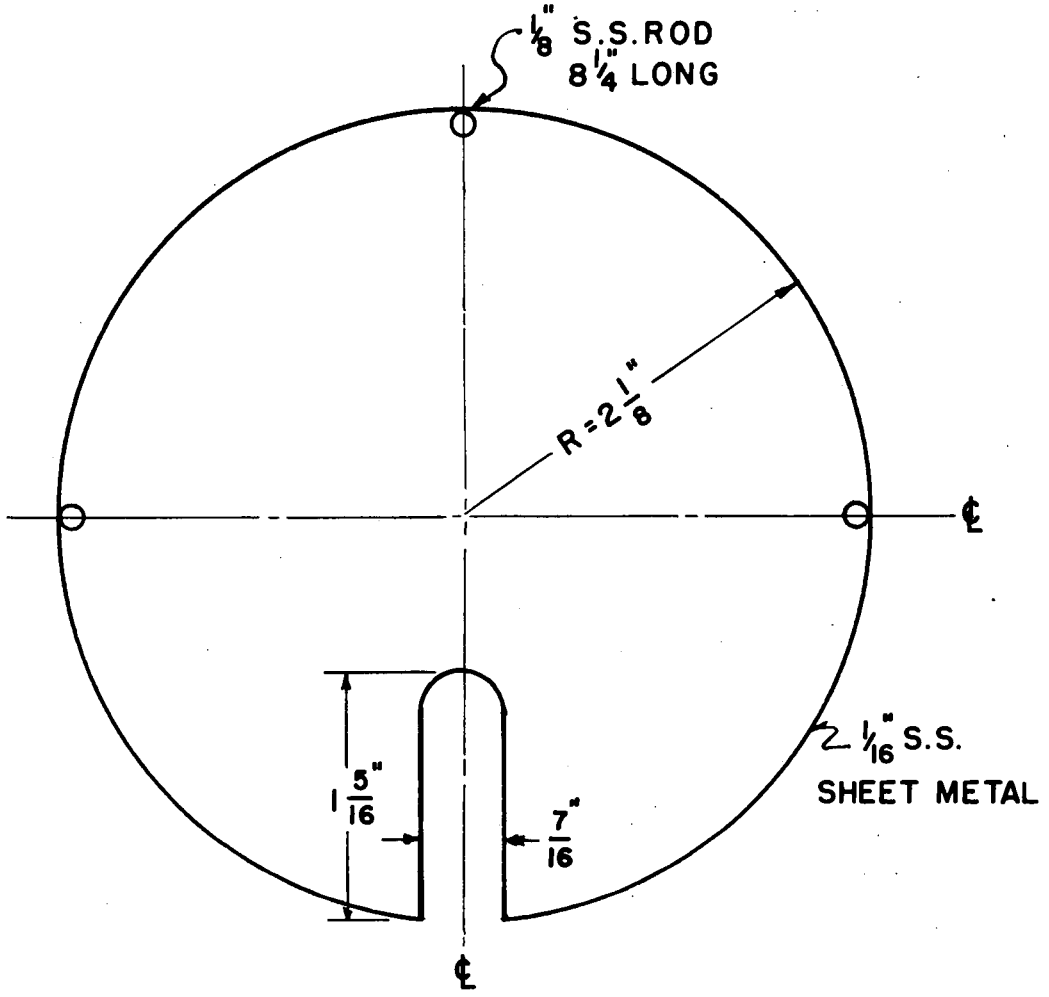

FIGURE 4
SUPPORT PLATFORM FOR SAMPLE MELT POT

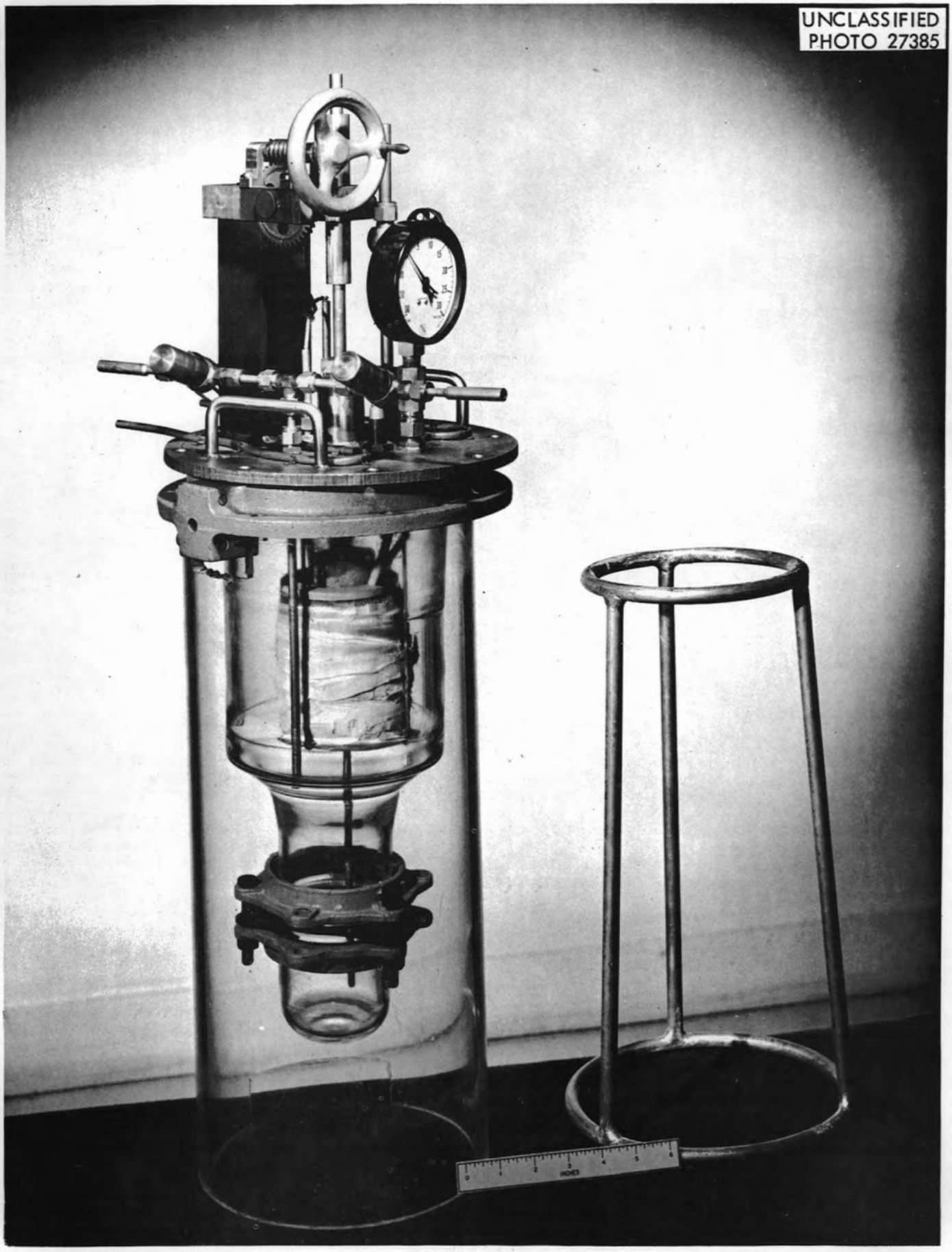

Figure 5. Apparatus for Testing Compatibility of Lubricating Fluids with Molten Alkali Metals and Fluoride Salts.