UNCLASSIFIED

CENTRAL RESEARCH LIBRARY
DOCUMENT COLLECTION

MARTIN MARIETTA ENERGY SYSTEMS LIBRARIES
3 4456 0361027 9

ORNL-2138
Chemistry

4

CHEMICAL AND ISOTOPIC STUDIES OF THE CLOSED-CYCLE CARBONATE SYSTEM FOR N^{15} ENRICHMENT

A. A. Palko
L. L. Brown
G. M. Begun
E. F. Joseph

CENTRAL RESEARCH LIBRARY
DOCUMENT COLLECTION

LIBRARY LOAN COPY

DO NOT TRANSFER TO ANOTHER PERSON

If you wish someone else to see this document, send in name with document and the library will arrange a loan.

OAK RIDGE NATIONAL LABORATORY
OPERATED BY
UNION CARBIDE NUCLEAR COMPANY
A Division of Union Carbide and Carbon Corporation
UCC
POST OFFICE BOX P · OAK RIDGE, TENNESSEE

UNCLASSIFIED

Printed in USA. Price 25 cents. Available from the

Office of Technical Services
U. S. Department of Commerce
Washington 25, D. C.

LEGAL NOTICE

This report was prepared as an account of Government sponsored work. Neither the United States, nor the Commission, nor any person acting on behalf of the Commission:

A. Makes any warranty or representation, express or implied, with respect to the accuracy, completeness, or usefulness of the information contained in this report, or that the use of any information, apparatus, method, or process disclosed in this report may not infringe privately owned rights; or

B. Assumes any liabilities with respect to the use of, or for damages resulting from the use of any information, apparatus, method, or process disclosed in this report.

As used in the above, "person acting on behalf of the Commission" includes any employee or contractor of the Commission to the extent that such employee or contractor prepares, handles or distributes, or provides access to, any information pursuant to his employment or contract with the Commission.

UNCLASSIFIED

ORNL-2138

cy. 4

Contract No. W-7405-eng-26

CHEMISTRY DIVISION

CHEMICAL AND ISOTOPIC STUDIES OF THE CLOSED-CYCLE CARBONATE SYSTEM FOR N^{15} ENRICHMENT

A. A. Palko
L. L. Brown
G. M. Begun
E. F. Joseph

DATE ISSUED

OCT 24 1956

OAK RIDGE NATIONAL LABORATORY
Operated by
UNION CARBIDE NUCLEAR COMPANY
A Division of Union Carbide and Carbon Corporation
Post Office Box P
Oak Ridge, Tennessee

UNCLASSIFIED

MARTIN MARIETTA ENERGY SYSTEMS LIBRARIES

3 4456 0361027 9

ORNL-2138
Chemistry
TID-4500 (12th ed.)

INTERNAL DISTRIBUTION

1. C. E. Center
2. Biology Library
3. Health Physics Library
4–5. Central Research Library
6. Reactor Experimental Engineering Library
7–26. Laboratory Records Department
27. Laboratory Records, ORNL R.C.
28. A. M. Weinberg
29. L. B. Emlet (K-25)
30. J. P. Murray (Y-12)
31. J. A. Swartout
32. E. H. Taylor
33. E. D. Shipley
34. W. H. Jordan
35. M. L. Nelson
36. S. C. Lind
37. F. L. Culler
38. A. Hollaender
39. A. H. Snell
40. M. T. Kelley
41. J. A. Lane
42. K. Z. Morgan
43. J. H. Frye, Jr.
44. C. P. Keim
45. R. S. Livingston
46. T. A. Lincoln
47. A. S. Householder
48. C. S. Harrill
49. C. E. Winters
50. D. W. Cardwell
51. E. M. King
52. A. J. Miller
53. D. D. Cowen
54. M. J. Skinner
55. S. J. Cromer
56. G. E. Boyd
57. P. M. Reyling
58. G. C. Williams
59. R. R. Dickison
60. A. A. Palko
61. L. L. Brown
62. E. F. Joseph
63–67. G. M. Begun
68. C. E. Larson (consultant)
69. P. H. Emmett (consultant)
70. H. Eyring (consultant)
71. V. Schomaker (consultant)
72. G. T. Seaborg (consultant)
73. ORNL – Y-12 Technical Library, Document Reference Section

EXTERNAL DISTRIBUTION

74. R. F. Bacher, California Institute of Technology
75. Division of Research and Development, AEC, ORO
76–660. Given distribution as shown in TID-4500 under Chemistry category (200 copies – OTS)

DISTRIBUTION PAGE TO BE REMOVED IF REPORT IS GIVEN PUBLIC DISTRIBUTION

CONTENTS

Abstract 1

Introduction 1

Exchange Between Ammonia and Carbamate Ion 4

Temperature Dependence of the Effective Isotopic Separation Factor 5

Calculation of the Isotopic Separation Factor Between Carbamate Ion and Gaseous Ammonia 7

Batch Calcium Hydroxide Slurry Experiments 8

Column Studies of the Isotope Exchange System 9

Column Studies of the Calcium Hydroxide Reflux 13

Bibliography 19

CHEMICAL AND ISOTOPIC STUDIES OF THE CLOSED-CYCLE CARBONATE SYSTEM FOR N^{15} ENRICHMENT

A. A. Palko G. M. Begun
L. L. Brown E. F. Joseph

ABSTRACT

Of the many possible methods of concentrating nitrogen isotopes, chemical exchange has been found to be one of the most attractive means for large-scale production of highly enriched N^{15}. In the closed-cycle ammonia–ammonium carbonate system, the method under study, ammonium carbonate solution in the aqueous phase exchanges with gaseous ammonia to give isotopic fractionation. Ammonium carbonate solution from the bottom of the exchange column is neutralized with calcium hydroxide to form calcium carbonate and ammonia. The ammonia formed is passed up the exchange column and the calcium carbonate is calcined to drive off carbon dioxide. The carbon dioxide is recombined with water and ammonia to form ammonium carbonate solution at the top of the exchange column. Calcium hydroxide is re-formed by treating the calcium oxide with water. In such a closed-cycle system, only heat is consumed to accomplish the reflux processes. Reflux chemicals are recycled from one end of the system to the other.

The isotopic exchange reaction between gaseous ammonia and ammonium carbonate solution saturated with dissolved ammonia has been studied. Rapid exchange was found between carbamate ion and the other nitrogen species present. The effective separation factor at atmospheric pressure determined from single-stage equilibrations was found to be 1.015 at 15.6°C, 1.019 at 25.8°C, 1.021 at 35.9°C, and 1.022 at 44.3°C. Calculations from the data gave the following values for the separation factar between gaseous ammonia and carbamate ion: 1.023 at 15.6°C, 1.021 at 25.8°C, 1.021 at 35.9°C, and 1.019 at 44.3°C. In both exchange reactions, N^{15} concentrates in the aqueous phase. Column studies were made and found to be in agreement with these data. Batch experiments and column studies of the use of calcium hydroxide slurry for the reflux reaction with ammonium carbonate solution showed that the difficulties encountered could be overcome and that the ammonia could be satisfactorily stripped from the waste solution. Operation at atmospheric pressure, good separation factor, and recycle of reflux chemicals make this system an attractive one for the economical production of N^{15}.

INTRODUCTION

From a nuclear standpoint, the concentration of the nitrogen isotopes should be quite worth while. Nitrogen-15, with an abundance of 0.37 at. %, has a cross section for the absorption of thermal neutrons of 8×10^{-5} barn as compared with N^{14} which has a cross section of 1.78 barns. For possible use in nuclear reactors, it would be desirable to concentrate N^{15} to at least 95 at. %. Some of the methods that have been used to concentrate nitrogen isotopes are listed in Table 1. The separation factor is defined as the quotient of N^{15}/N^{14} ratios taken before and after a single stage in the operation. Of the methods listed, only gaseous and thermal diffusion and chemical exchange have been used to appreciably concentrate N^{15}.

For many light elements, a chemical exchange system offers the best possibility for an economic method of isotope separation, and the interest was centered on this method. The equilibrium separation factors, calculated by Urey (*1*) and Spindel (*2*) with the use of spectroscopic data and partition function ratios, for some chemical exchange systems are shown in Table 2. As arranged, N^{15} would concentrate in the species at the left of the table.

The chemical exchange system for the enrichment of N^{15}, employing ammonia gas and aqueous ammonium ion, was first proposed by Urey and Aten (*20*) in 1936, and, despite the numerous studies of this system by other workers (*23–36*), very few modifications have been suggested. In most cases, a saturated solution of ammonium nitrate from an infinite reservoir was fed to the

TABLE 1. METHODS OF NITROGEN ISOTOPE ENRICHMENT

Method	Separation Factor	References*
Gaseous diffusion (N_2)	1.018 (calcd)	(*3–5*)
Thermal diffusion (N_2)	1.009 (T_r = 434°K)	(*6–10*)
Distillation of liquid N_2	1.0047 (760 mm)	(*11–13*)
Distillation of liquid NH_3	1.0024 (760 mm)	(*14–15*)
Electrolysis of aqueous NH_4^+	1.008 (30°C)	(*16*)
NO vs NO_2	1.02–1.04 (calcd at 25°C)	(*17–19*)
HCN vs CN^- (aqueous)	1.003 (25°C)	(*20–22*)
NH_3 vs NH_3 (aqueous)	1.005 (25°C)	(*23–24*)
NH_3 vs NH_4^+ (aqueous)	1.034 (25°C)	(*20, 23–36*)
Thermal diffusion plus chemical exchange (NO + NO_2)		(*37–41*)

*See "Bibliography," this report.

TABLE 2. CALCULATED EQUILIBRIUM EXCHANGE CONSTANTS AT 25°C (*1, 2*)

	$\frac{N^{15}O_3^-}{N^{14}O_3^-}$	$\frac{N^{15}O_2}{N^{14}O_2}$	$\frac{N^{15}H_4^+}{N^{14}H_4^+}$	$\left(\frac{N_2^{15}}{N_2^{14}}\right)^{1/2}$	$\frac{N^{15}H_3}{N^{14}H_3}$	$\frac{N^{15}O}{N^{14}O}$	$\frac{HCN^{15}}{HCN^{14}}$	$\frac{(CN^{15})^-}{(CN^{14})^-}$
Q_2/Q_1	1.169	1.109	1.1059	1.0814	1.0688	1.0659	1.0655	1.0641
$N^{15}O_3^-/N^{14}O_3^-$	1.000	1.054	1.057	1.081	1.094	1.097	1.097	1.099
$N^{15}O_2/N^{14}O_2$		1.000	1.003	1.026	1.038	1.040	1.041	1.035
$N^{15}H_4^+/N^{14}H_4^+$			1.000	1.023	1.035	1.038	1.038	1.039
$(N_2^{15}/N_2^{14})^{1/2}$				1.000	1.012	1.015	1.015	1.016
$N^{15}H_3/N^{14}H_3$					1.000	1.003	1.003	1.004
$N^{15}O/N^{14}O$						1.000	1.000	1.002
HCN^{15}/HCN^{14}							1.000	1.001

top of an exchange column and passed countercurrent to a stream of ammonia gas. Isotopic exchange took place between the ammonia gas and the ammonium nitrate solution, with the result that the N^{15} was concentrated at the lower end of the column. In order to establish an isotopic gradient, reflux had to take place at the bottom of the column. This was accomplished by adding sodium hydroxide solution to convert ammonium nitrate to ammonia gas, which was returned to the exchange column. At the large reflux ratios (of the order of 12,000 to 1) required to produce highly enriched N^{15}, large amounts of chemicals are consumed by this process.

For the most efficient operation, the ammonia from the top of the column should be neutralized with nitric acid, and the ammonium nitrate formed should be fed to the column to obtain reflux at this end also. In this case, feed ammonia or ammonium nitrate would enter the column part way down the column.

Table 3 illustrates the problems involved in producing concentrated N^{15} with such a chemical reflux system and shows a few approximate calculations, which were made by using the formulas of Shacter and Garrett (*42*). The effective single-stage separation factor is represented by α, the number of stages by N, and the reflux ratio by V/D. The values of 1.5 N (min) and 1.4 (V/D) (min) have been arbitrarily chosen as reasonable values for a plant actually producing N^{15}. For example, with a value of 1.02 for α and the assumption that all aqueous N is NH_4^+ ion, some 647 enriching stages would be required to produce 95% N^{15}, and a reflux ratio of almost 18,000:1 would be necessary. This means that for every gram atom of 95% N^{15} produced it would be necessary to convert 18,000 moles of ammonium nitrate to ammonia, which would require 18,000 moles of sodium hydroxide, and that, if reflux at the other end were used, to convert 18,000 moles of ammonia to ammonium nitrate with nitric acid.

TABLE 3. NUMBER OF STAGES AND REFLUX RATIOS (SQUARE CASCADE – ENRICHING SECTION)

α^a	Per Cent of N^{15} (product)	1.5 N^b (min)	1.4 $(V/D)^c$ (min)
1.08	60.0	117	2,832
	95.0	167	4,493
	99.9	243	4,725
1.05	60.0	185	4,530
	95.0	270	7,187
	99.9	384	7,560
1.02	60.0	455	11,326
	95.0	647	17,969
	99.9	947	18,900
1.005	60.0	1802	45,304
	95.0	2564	71,876
	99.9	3753	75,600

[a]Effective single-stage separation factor.

[b]Number of stages.

[c]Reflux ratio.

A loss of 0.006% of the ammonia during the conversion would constitute the product rate, and the production of 95% N^{15} would be zero. In actual operation, with a tapered cascade, reflux requirements would be somewhat less stringent, perhaps by a factor of 10 or more, but the consumption of chemicals would remain the same. This illustrates the two problems which are involved: the consumption of large amounts of chemicals by chemical reflux at high reflux ratios and the necessity for highly quantitative reflux of the product stream. In an operation involving these problems the cost of reflux chemicals becomes one of the major factors in product cost.

One method of reducing the cost of reflux chemicals is the "closed reflux" scheme, in which the chemicals produced at each end are used to reflux the system at the other end. Figure 1 shows a schematic representation of such a system, which was proposed by Urey (*43*) for the NH_4^+ ion–ammonia exchange. Ammonium carbonate is used in place of ammonium nitrate in the aqueous phase. At the bottom of the exchange column, calcium hydroxide is added to drive off the gaseous ammonia and convert the carbonate to calcium carbonate. The calcium carbonate formed is calcined to drive off carbon dioxide, which is recombined at the top of the column with water and the ammonia from the exchange column to form ammonium carbonate solution and accomplish the other reflux. Only heat is consumed, and the feed and waste streams are gaseous ammonia.

The substitution of ammonium carbonate for ammonium nitrate, however, is not simply a substitution of carbonate ion for nitrate ion, because aqueous ammonium carbonate solution contains a mixture of bicarbonate, carbonate, and carbamate ions. Formation of carbamate is often slow, and

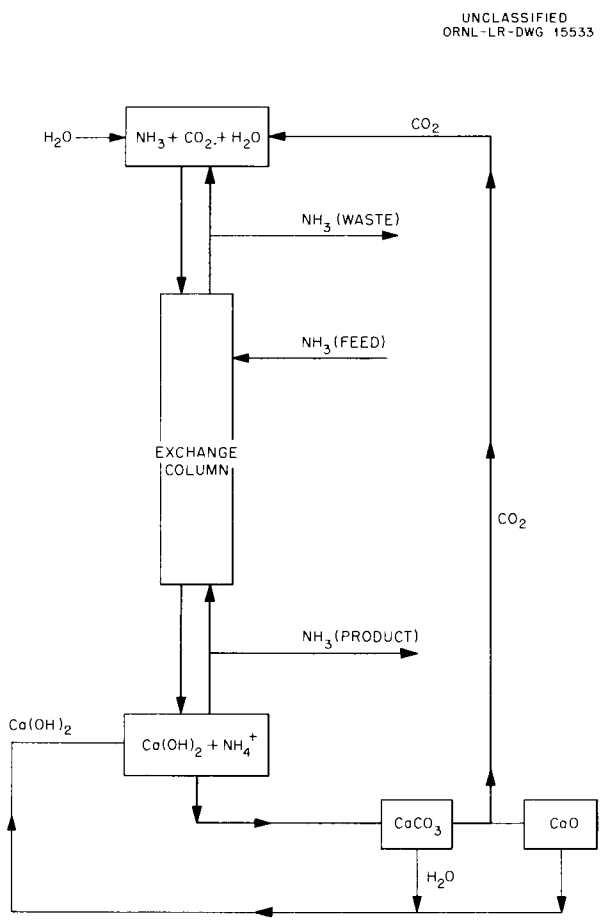

Fig. 1. Ammonia–Ammonium Carbonate Closed-Cycle System.

it seemed possible that carbamate ion would not exchange nitrogen quickly enough with the other aqueous species or gaseous ammonia for countercurrent operation to be feasible. If carbamate ion exchanged slowly with the other nitrogen-containing species, N^{14} from the waste end of the exchange column would be carried to the product end of the system, and the isotopic gradient would be destroyed.

In order to evaluate the possibilities of large-scale production of N^{15} by this system, the experimental work discussed was undertaken.

EXCHANGE BETWEEN AMMONIA AND CARBAMATE ION

Chemical analysis of the liquid phase used in the carbonate system shows a high concentration of ammonium carbamate. Approximately one third of the total nitrogen present is in the form of carbamate ion. Mellor (*44*) indicates that the formation of carbamate from carbonate takes some days to reach equilibrium. This suggests the possibility that nitrogen contained in the carbamate ion might not exchange rapidly with other nitrogen species in the system. If the nitrogen contained in the carbamate ion did not exchange with other nitrogen species or if it exchanged very slowly, serious limitations would probably be imposed upon the degree of isotopic enrichment obtainable in the carbonate system, because ammonia, in the product refluxer, is formed from the carbamate ion as well as from all the other nitrogen species in solution. If the carbamate nitrogen did not exchange in the exchange column, it would not be enriched in N^{15} and would dilute the product with large quantities of N^{14}. The experiments to be described were performed to determine the rate of exchange of the carbamate ion nitrogen with ammonia gas.

The phase diagram of the CO_2, NH_3, H_2O system (*45–47*) indicates that solutions approximately 20 *M* in total nitrogen (dissolved ammonia, ammonium ion, and carbamate ion) should be possible at 25°C. The solutions used in experiments at ORNL were prepared by simultaneously saturating water with gaseous ammonia and commercial ammonium carbonate (a mixture of ammonium bicarbonate and ammonium carbamate). This method was found to produce solutions whose total carbon content was close to the phase diagram compositions shown by Jänecke (*46*) although consistently somewhat lower in total nitrogen content.

In the exchange experiments, a weighed amount of NH_3 gas enriched with N^{15} was equilibrated with a weighed amount of carbonate solution saturated with ammonia. The reaction vessel was a 1-liter, round-bottom flask equipped with a capillary stopcock for gas sampling, a self-sealing rubber diaphragm for admitting the liquid phase from a hypodermic needle, and a 10-cm-long nipple which served as a cold trap during the introduction of the ammonia gas. At the beginning of the experiment the flask was evacuated and weighed. Ammonia gas prepared from ammonium nitrate enriched in N^{15} and dried over CaO was admitted, and the flask was reweighed. Aqueous ammonium carbonate solution aged for three weeks to ensure chemical equilibrium was injected hypodermically through the rubber diaphragm. The weight of

solution added was found by weighing the syringe before and after addition of the liquid. The flask was shaken vigorously by hand, and samples of the gas phase were taken in evacuated bulbs at intervals. These and other isotopic samples were analyzed on a Consolidated Model 21-330 mass spectrometer, which was originally designed for water analysis but which was converted to measure mass 28/29 ratios directly. Samples for analysis were neutralized with HCl and converted to N_2 gas by the use of alkaline sodium hypobromite.

Tables 4 and 5 give the conditions and the results of the two exchange experiments which were performed. In the first experiment isotopic equilibrium was obtained in less than 3 min. However, the N^{15} inventory for the system differed considerably from the calculated value. Since no experimental explanation for this discrepancy was apparent, a second experiment was made, in which special attention was given to the purifying of the labeled ammonia used in the reaction. In addition to the other precautions the flask was pumped down to constant weight, with the ammonia frozen. Also, ammonia containing less N^{15} was used, since some difficulties had been encountered in obtaining reproducible assays on highly enriched N^{15} samples. The results of the second experiment were similar to those of the first: isotopic equilibrium was attained in less than 3 min, but the equilibrium composition was lower in N^{15} than that calculated.

It was concluded that the carbamate ion had completely exchanged nitrogen with gaseous ammonia under the conditions of the experiment in less than 3 min. The only explanation for the discrepancy between the final values calculated and those determined is that there were errors in the material balances. However, the constancy of the percentage of N^{15} with time shows that no further exchange was taking place.

If exchange occurs in 3 min, the presence of carbamate ion is not expected to impose limitations upon the degree of isotopic enrichment obtainable in the carbonate system.

TABLE 4. CHEMICAL DATA FOR CALCULATING ISOTOPIC EQUILIBRIUM VALUES IN AMMONIA–CARBAMATE ION EXCHANGE

	Run 1	Run 2
Gas phase NH_3, g	0.283	0.232
Liquid phase		
Solution, ml	4.54	4.21
Total NH_3, *M*	20.70	19.40
Total CO_2, *M*	6.30	6.15
NH_2COO^-, *M*	5.82	5.79

TABLE 5. ISOTOPIC ANALYSES OF GAS PHASE FROM AMMONIA–CARBAMATE ION EXCHANGE

Sample Exchange Time (min)	N^{15} (%)	
	Run 1	Run 2
Assay		
0	32.60	3.17
3	3.04	0.694
20	3.12	0.695
45	3.07	0.673
Calculated		
Complete exchange	5.13	0.770
Carbamate nonexchange	6.63	0.908

TEMPERATURE DEPENDENCE OF THE EFFECTIVE ISOTOPIC SEPARATION FACTOR

In a simple isotope reaction the separation factor decreases with increasing temperature. However, in the carbonate system several temperature-dependent equilibria contribute to the separation factor, and it is not possible to predict accurately the best operating temperature for the exchange reaction. To determine the optimum operating temperature, a series of single-stage batch experiments were performed in which the separation factor was measured as a function of temperature.

These runs were made in a 1-liter round-bottom reaction flask fitted with a stirrer and with outlets for sampling the liquid and gaseous phases. The reaction flask was submerged almost entirely beneath the surface of a constant-temperature bath. Care was taken to protect the sample outlets from the bath water.

The liquid phase used in these experiments was prepared by saturating water with both ammonium carbonate and ammonia. This saturated solution was held at constant temperature for a minimum

of five days before use to ensure chemical equilibrium between all possible molecular species. Anhydrous tank ammonia was used in these runs. Both gas and liquid phases were of normal N^{15} content.

To make a determination, ammonia was blown through the flask for several minutes to replace all the air. About 60 ml of ammonium carbonate solution was added, and the stirrer was inserted to seal the system. Stirring was started and was continued for 2 to 2.5 hr. Then the flask was removed from the bath, and the phases were quickly separated. A portion of the liquid sample was neutralized with HCl and converted to N_2 for isotopic analysis. The remainder of the liquid was used immediately for chemical analysis. Samples of the gas phase were absorbed in aqueous HCl and later prepared for isotopic analysis. Runs were not made at temperatures above 44.3°C because of the thermal instability of the carbonate solution. Total NH_3, total CO_2 and NH_2COO^- were determined directly. To determine NH_2COO^-, an immediate cold precipitation of carbonate with $Ba(OH)_2$ was made (*48*). The precipitate was removed by centrifugation, and the solution was warmed for 1 hr in a steam bath to convert carbamate to carbonate. The $BaCO_3$ formed was then filtered off and titrated. The NH_4^+ concentration was calculated from the anionic concentration of the solution on the assumption that there was complete ionization. The dissolved NH_3 was calculated by deducting the NH_4^+ and NH_2COO^- concentrations from the total NH_3 of the solution. Results of these analyses are shown in Table 6.

The isotopic samples were stored as aqueous NH_4Cl solutions until all runs were completed. All samples were then converted to N_2 and were submitted in a group to facilitate analysis under comparable instrument conditions. Values of α resulting from these measurements are given in Table 7 and in Fig. 2. From the figure it may be seen that the effective separation factor increases with increasing temperature, reaching a maximum in the neighborhood of 45°C. However, the rate of change of α between room temperature and 45°C is so small that any temperature in this range would serve reasonably well. Thus, considerations other than the magnitude of the separation factor should determine the choice of operating temperature for the exchange reaction in this range.

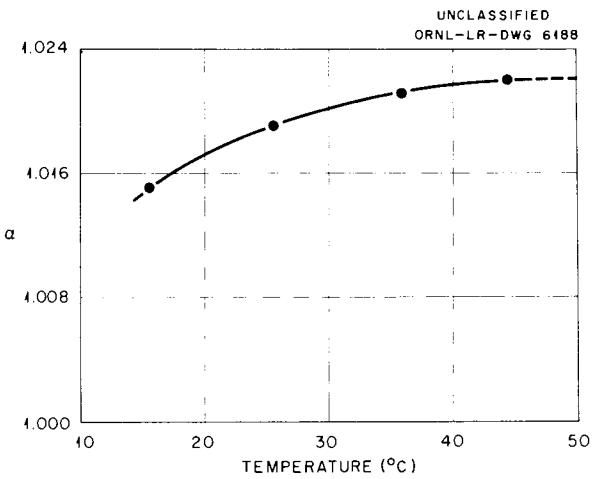

Fig. 2. Temperature Dependence of α for the Carbonate System.

TABLE 6. CHEMICAL COMPOSITION OF LIQUID PHASES FROM SINGLE-STAGE BATCH RUNS (CARBONATE SYSTEM)

Temperature of runs, °C	15.6	25.8	35.9	44.3
Total NH_3, *M*	19.35	20.05	20.1	18.10
Total CO_2, *M*	3.94	6.20	7.50	8.03
NH_2COO^-, *M*	3.71	5.82	6.68	6.81
NH_4^+, *M**	4.12	6.51	8.02	8.64
NH_3 dissolved, *M**	11.52	7.72	5.40	2.65
pH	10.8	10.9	10.5	
Barometric pressure, mm Hg	747	742	738	751

*Calculated values.

TABLE 7. SINGLE-STAGE BATCH DETERMINATIONS OF α^* IN THE CARBONATE SYSTEM

	$\frac{(N^{15}/N^{14})_{liquid}}{(N^{15}/N^{14})_{gas}}$			
	At 15.6°C	At 25.8°C	At 35.9°C	At 44.3°C
	1.0124	1.0180	1.0213	1.0179
	1.0160	1.0184	1.0222	1.0238
	1.0158	1.0185	1.0227	1.0232
	1.0159	1.0185	1.0191	1.0223
		1.0212		
$\alpha^*_{(95\%\ C.I.)}$	1.015 ± 0.003	1.019 ± 0.002	1.021 ± 0.003	1.022 ± 0.004

$$^*\alpha = \frac{(N^{15}/N^{14})_{liquid}}{(N^{15}/N^{14})_{gas}} .$$

CALCULATION OF THE ISOTOPIC SEPARATION FACTOR BETWEEN CARBAMATE ION AND GASEOUS AMMONIA

After the effective single-stage separation factors for the system were measured and the chemical data were obtained, it was possible to calculate the separation factor between ammonia gas and carbamate ion at the various temperatures involved.

The three reactions responsible for the isotopic concentrations are

$$(1)\quad N^{14}H_4^+\,(soln) + N^{15}H_3\,(g) = N^{15}H_4^+\,(soln) + N^{14}H_3\,(g)$$

$$(2)\quad N^{14}H_3\,(soln) + N^{15}H_3\,(g) = N^{15}H_3\,(soln) + N^{14}H_3\,(g)$$

$$(3)\quad N^{14}H_2COO^-\,(soln) + N^{15}H_3\,(g) = N^{15}H_2COO^-\,(soln) + N^{14}H_3\,(g)$$

If K_1, K_2, and K_3 are the equilibrium constants for the isotopic exchange reactions, it can be shown that at low N^{15} concentrations the effective separation factor α for the system is related to K_1, K_2, and K_3 by the equation

$$(4)\quad (\alpha - 1) = M_1 (K_1 - 1) + M_2 (K_2 - 1) + M_3 (K_3 - 1) ,$$

where M_1 is the mole fraction of NH_4^+ with respect to the total dissolved nitrogen-containing species, and M_2 and M_3 are the similar mole fraction of dissolved NH_3 and carbamate ion, respectively. Kirshenbaum and co-workers (*24*) determined values for K_1 and K_2 at 25°C, and Nakane (*35*) calculated the values at various temperatures. If these data are substituted in Eq. 4, K_3 can be calculated at the various temperatures. Results of this calculation are given in Table 8, along with the values of K_1 and K_2 used.

The values for K_3 are seen to decrease with increasing temperature as expected. The increase in the over-all separation factor of the system is seen to be due largely to the decreasing mole fraction of dissolved ammonia as the temperature

TABLE 8. CALCULATED VALUES FOR THE SEPARATION FACTOR BETWEEN GASEOUS AMMONIA AND CARBAMATE ION

T (°C)	M_1	K_1*	M_2	K_2*	M_3	K_3
15.6	0.213	1.036	0.595	1.005	0.192	1.023
25.8	0.325	1.034	0.385	1.005	0.290	1.021
35.9	0.399	1.032	0.269	1.005	0.332	1.021
44.3	0.477	1.030	0.147	1.004	0.376	1.019

*Calculated by Nakane (*35*).

increases. This is somewhat compensated for, however, by the decreasing values of K_1, K_2, and K_3, so that the total separation is close to a maximum at 44.3°C and would be expected to decrease at higher temperatures.

BATCH CALCIUM HYDROXIDE SLURRY EXPERIMENTS

In order to determine optimum concentrations of calcium hydroxide to be used in a lime slurry and to determine whether the final traces of ammonia could be removed from such a slurry by boiling, several batch experiments were performed. Each experiment consisted essentially in placing a specific amount of a known calcium hydroxide slurry along with a known amount of ammonium carbonate feed solution and water into a 2-liter round-bottom flask and boiling the resultant slurry, without reflux, to expel ammonia. Volumes were kept constant by the addition of water as the boiling proceeded. Stirrers kept the slurry suspended and prevented bumping. Samples were taken periodically and were analyzed for total ammonia by the Kjeldahl method. The results are shown in Table 9.

These studies indicate that a 1 *M* $Ca(OH)_2$ slurry is the most efficient for reflux purposes. The last traces of ammonia are difficult to expel, and, based on the data obtained, effluents containing on the order of 10 ppm of residual ammonia might be expected in a batch-type operation; however, in a continuous-flow countercurrent process, removal of the final traces of ammonia should present less difficulty.

TABLE 9. CALCIUM HYDROXIDE SLURRY REFLUX OF AMMONIUM CARBONATE SOLUTION

Run No.	Calcium Hydroxide Slurry Concentration (moles/liter)	Total Ammonia, $NH_3 + NH_4^+ + NH_2COO^-$ (moles/liter)	Ratio of OH to NH_3	Residual Ammonia After Heating Interval (moles/liter)				
				15 min	30 min	90 min	180 min	270 min
1[a]	0.5	2.27	1:1	1.76	1.42	0.16	0.007	0.002
2[a]	1.0	2.27	2:1	0.81	0.22	0.0024	0.002	0.002
3[a]	2.0	2.27	4:1	1.10	0.51	0.005	0.002	0.0013
				10 min	20 min	30 min	60 min	270 min
4[b]	0.5	1.95	1:1	1.17	0.68	0.43	0.037	0.0028
5[b]	1.0	1.95	2:1	0.83	0.31	0.125	0.053	0.0019
6[b]	2.0	1.95	4:1	0.90	0.38	0.172	0.0037	0.0014
					30 min	60 min	120 min	210 min
7[c]	1	1	2:1		0.29	0.009	0.0023	0.0015
8[c]	3	3	2:1		1.39	0.080	0.0060	0.0048
9[c]	6	6	2:1		Too thick to boil			
				360 min	420 min	750 min	810 min	
11[d]	4	1	8:1	159[e]	120[e]	24.0[e]	16.0[e]	
12[d]	4	1	8:1	100[e]	119[e]	8.5[e]	11.5[e]	
13[d]	4	1	8:1	90[e]	84[e]	9.6[e]	14.1[e]	

[a]1200 cc of slurry plus 200 cc of solution 13.6 *M* in total available NH_3, mixed cold.
[b]1200 cc of slurry plus 200 cc of solution 12.0 *M* in total available NH_3, mixed hot.
[c]1000 cc of H_2O plus *N* moles of $Ca(OH)_2$ and *N* moles of available NH_3, mixed cold.
[d]1000 cc of H_2O plus 4 moles $Ca(OH)_2$ plus 1 mole of available NH_3, mixed cold.
[e]As ppm.

COLUMN STUDIES OF THE ISOTOPE EXCHANGE SYSTEM

In order to provide actual operational data about the carbonate system, column studies were undertaken. Figure 3 shows a schematic diagram of the apparatus used for studying the system under countercurrent conditions. The 2.1-cm-ID exchange column had a 10.5-ft exchange section packed with $\frac{1}{8}$-in. glass helices and was jacketed for temperature control. The reflux column used to strip the ammonia from the solution after addition of $Ca(OH)_2$ or NaOH was of 2-in.-ID glass, 15 ft high, and with a 14-ft section packed with ceramic saddles. It was wrapped with sections of heating tape so that the temperature of the column could be controlled. In operation, a feed solution of ammonium carbonate, saturated with gaseous ammonia and commercial ammonium carbonate at the desired temperature, was pumped to the top of the exchange column. The ammonium carbonate solution passed down the exchange column, exchanging with ammonia gas, passing up the column at atmospheric pressure. From the bottom of the exchange column the carbonate solution was pumped to a feed point 4 ft from the top of the reflux column. Calcium hydroxide slurry or NaOH solution was preheated and fed into the top of the reflux column. A reboiler at the bottom of the reflux column removed the last traces of ammonia from the solution. The ammonia formed passed into the bottom of the exchange column.

A study of the phase diagram for the $NH_3 \cdot CO_2 - H_2O$ system (*45–47*) indicated that solutions approximately 20 *M* in total ammonia should be possible at 25°C. A method of feed preparation was used whereby a solution was saturated simultaneously with ammonia and commercial ammonium carbonate (a mixture of ammonium bicarbonate and ammonium carbamate) in a constant-temperature bath at 25.5°C. Analysis of this feed solution showed that it contained approximately 19 *M* total ammonia and 6 *M* total carbonate. Although solution of commerical ammonium carbonate is endothermic, solution of ammonia in the carbonate solution is highly exothermic, and considerable cooling is necessary during feed preparation. Once the feed solution had been prepared, a slow stream of ammonia was passed continuously through the solution to keep it saturated with ammonia. An excess of solid salt was maintained in the vessel at all times. Several exchange runs have shown that with feed prepared by this method the solution passing into the top of the exchange column is essentially at the same concentration in total ammonia and total carbonate as that coming from the bottom of the exchange column. Chemical equilibrium time for the column was less than 30 min. The simultaneous-saturation method enables a feed solution to be obtained which has a high concentration of total ammonia ($NH_4^+ + NH_2COO^- +$ dissolved NH_3) and which is saturated with ammonia gas.

Initial runs were made with calcium hydroxide slurry as a refluxing agent. Considerable difficulty was experienced in these runs because of intermittent plugging of the reflux column with deposits of calcium carbonate. Data for some of these runs are given in Table 10.

Since it was desirable to evaluate fully the use of a calcium hydroxide slurry as a reflux agent, several types of packing were tried in the reflux column in the hope of finding one which could be used successfully with the calcium hydroxide slurry in a packed column. One-half-inch ceramic saddles had proved to be impractical because calcium hydroxide precipitated directly on the saddles and formed deposits which soon plugged the column. It was thought that perhaps a smooth type of packing would be better, and so $\frac{1}{2}$-in. glass marbles were tried. However, since spherical packing reduces free space to a minimum, the marbles were less desirable than the saddles. In all three runs which were tried, the reflux column plugged with calcium carbonate after less than 3 hr.

Further work (see "Column Studies of the Calcium Hydroxide Reflux") showed that these difficulties could be overcome by the use of a precontact loop in which the $Ca(OH)_2$ slurry was allowed to react with the ammonium carbonate solution before their entry to the reflux column. In order to proceed with the exchange and enrichment studies in the column without redesign of the equipment, NaOH solution was used for reflux in the rest of the runs.

As α (single-stage separation factor) and N (the number of stages in the exchange column) were both unknown, a number of runs were made to evaluate both unknowns simultaneously by a graphical method. This was done by making a number of runs with the same temperatures, pressures, flow rates, and feed concentrations but

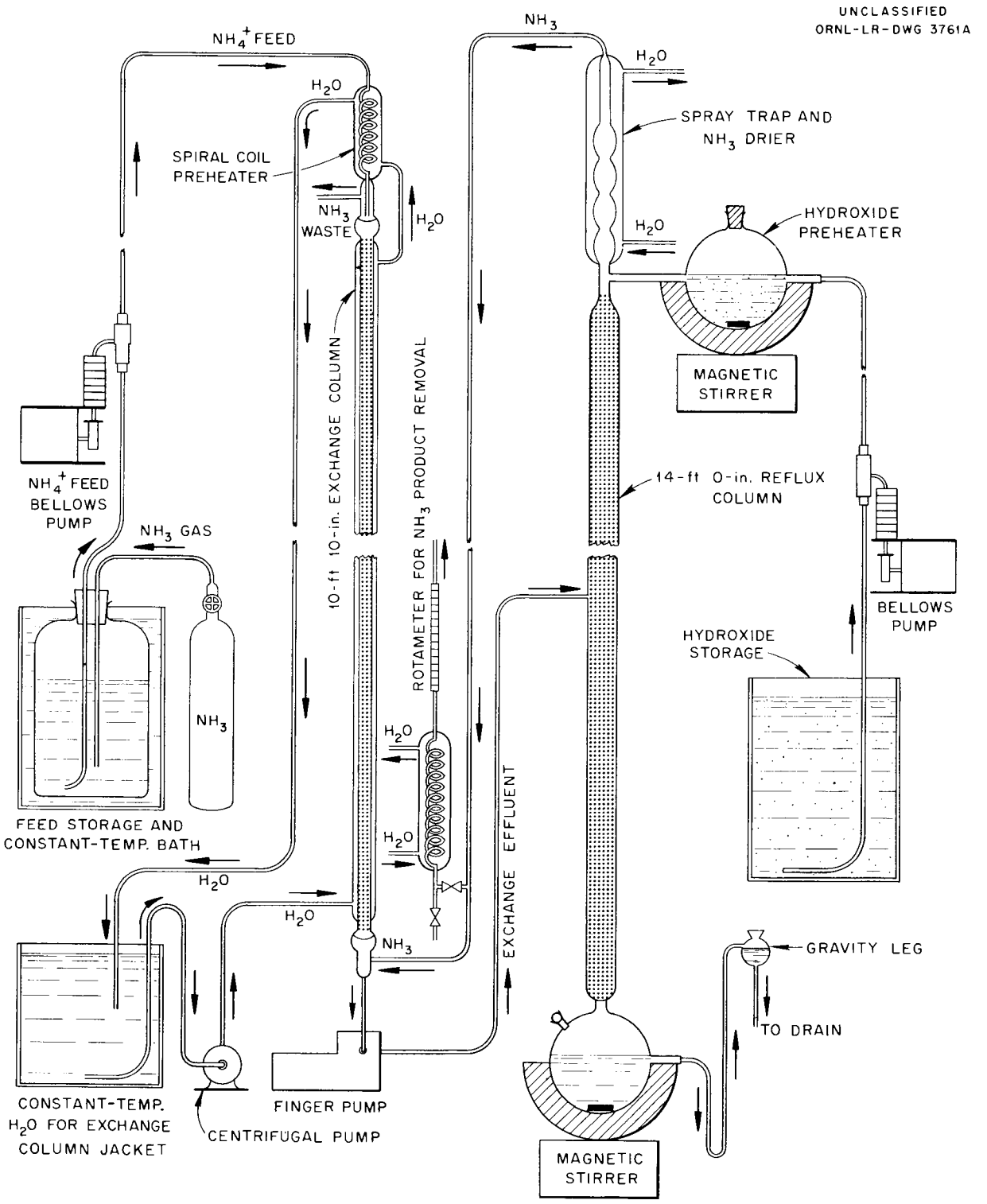

Fig. 3. Apparatus for the Study of the Ammonia vs Ammonium Carbonate Exchange System.

with different constant-product removal rates. Isotopic samples were taken and assayed, and curves of concentration vs time were plotted for each run. From isotopic equilibrium concentrations and the ratio of product removal to interstage flow (D/V), N can be calculated for any assumed α by using the formulas of Shacter and Garrett (*42*). These values of N were plotted against the corresponding values of α; each run gave a different curve. The intersection of the curves gave values of N and α simultaneously. If the runs had been perfect and if all conditions had been identical, with the exception of the rate of withdrawal, then the curves would have intersected at a single point. However, since equipment fluctuations and inaccuracies in analysis imposed limitations, the curves intersect in a triangle, the centroid of which is considered to be a measure of N and α.

Runs 1 through 8 were made to determine N and α. The data and results for all runs but No. 4 are summarized in Table 11 and for runs 3, 5, 6, 7, and 8 in Fig. 4. Figure 4 shows the isotopic

TABLE 10. PRELIMINARY EXCHANGE RUNS FOR THE SYSTEM AMMONIA vs AMMONIUM CARBONATE WITH CALCIUM HYDROXIDE REFLUX[a]

Run No.	Temperature (°C)	Feed Concentration (moles/liter)[b]	Feed Rate (cc/hr)	Calcium Hydroxide in Reflux Solution (moles/liter)	Reflux Rate (liters/hr)	Duration of Run (hr)
A[c]	30.5	6.0	1000	1.0	6.0	3.5
B[d]	32.5	6.0	500	1.0	5.0	5.0
C[e]	31	6.0	500	1.0	5.0	6.0

[a]All runs at atmospheric pressure.
[b]Moles of total ammonia = $NH_3 + NH_4^+ + NH_2COO^-$.
[c]Run discontinued because of formation of precipitate in the exchange column.
[d]Run discontinued because of formation of precipitate in the reflux column.
[e]Air drawn through the exchange column at the rate of 100 liters/hr; intermittent flooding of the reflux column took place.

TABLE 11. EXCHANGE RUNS WITH THE AMMONIA vs AMMONIUM CARBONATE SYSTEM[a]

Run No.	Total Time (hr)	Exchange Feed		Reflux Feed		Reflux Loss (meq/hr)	Product Removal (meq/hr)	Interstage Flow (meq/hr)	Total Product Removal[c]	Total[d] Separation
		moles/liter[b]	cc/hr	moles/liter	cc/hr					
1	5¾	17.5	320	4.0	4200	14.4	5.0	5600	0.346	
2	7½	17.5	320	4.0	4200	19.3	5.0	5600	0.428	1.60
3	7	19.0	360	4.0	4600	21.5	1565	6840	23.0	1.045
5	6¾	19.0	320	4.1	4000	22.9	490.2	6080	8.44	1.156
6	6½	19.0	322	6.0	3400	19.6	553.5	6118	9.37	1.142
7	15	19.0	322	6.0	3300	67.7	5.0	6118	1.19	1.314
8	16	18.0	315	2.6	3680	0.779	2.5	5670	0.05	1.420

[a]All runs at 30°C and atmospheric pressure.
[b]Total $NH_3 + NH_4^+ + NH_2COO^-$.
[c]Per cent of interstage flow.
[d]From curve extrapolated to equilibrium.

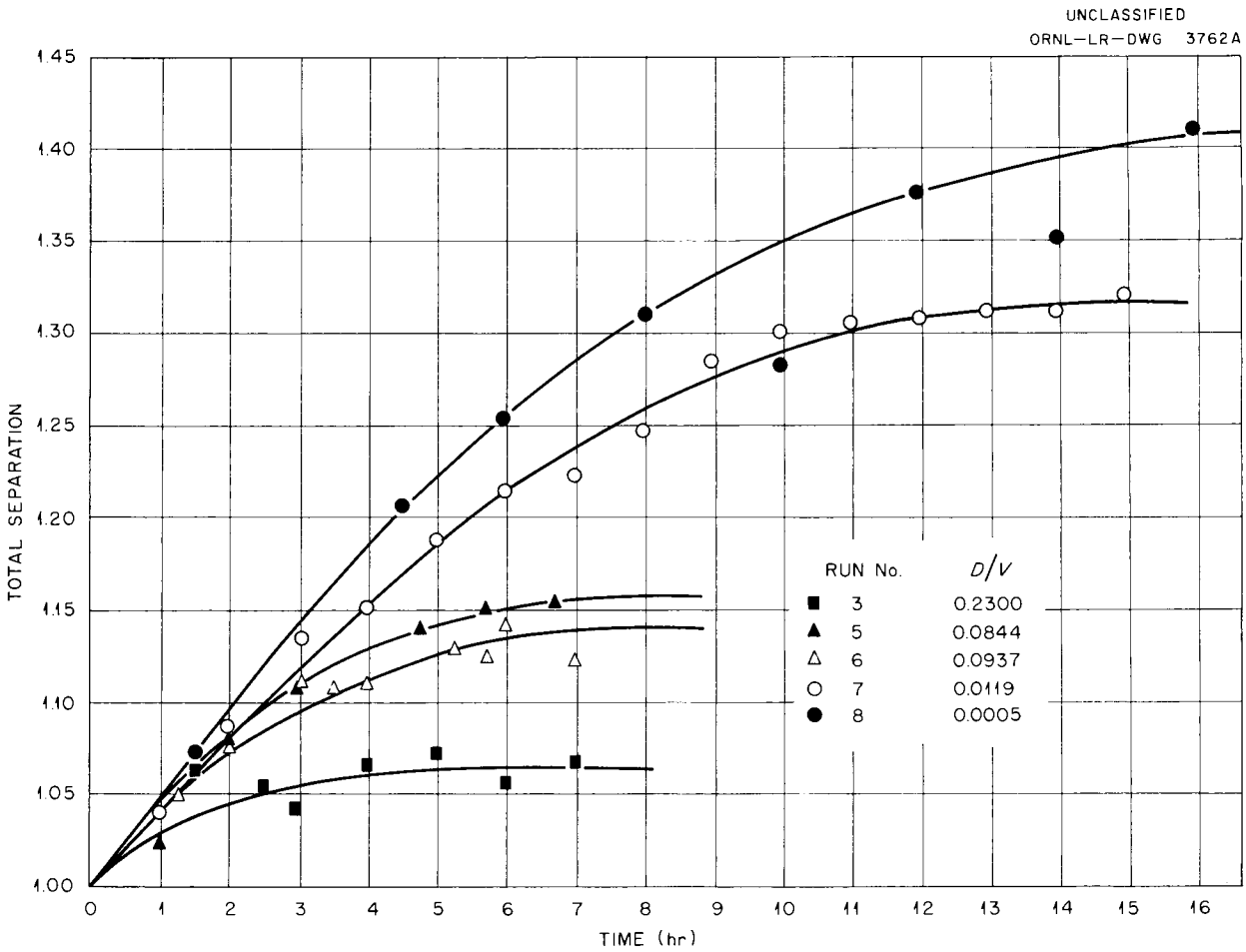

Fig. 4. Total Separation vs Time for Various D/V Ratios in the Ammonia–Ammonium Carbonate System.

analyses obtained from samples taken at intervals from the N^{15} end of the column. Total separation is defined as the N^{15}/N^{14} ratio of the sample divided by the N^{15}/N^{14} ratio of the feed solution; D/V is the ratio of the rate of product N withdrawal to the rate of flow of total N down the exchange column and represents the inverse of the reflux ratio. The flow rates, temperature, pressure, and feed concentration in the exchange column were kept essentially constant. Product removal was accomplished by bleeding a flow of ammonia gas from the bottom of the exchange column. The rate of removal was kept constant by monitoring the gas flow with a rotameter. Runs were made in which the product withdrawal varied from 0.01% to about 23% of the total interstage flow.

Table 12 is a summary of the equilibrium data used to calculate N for assumed α values for runs 3, 5, 6, and 7, which were judged to be the best and most comparable ones. These values of N and α are plotted in Fig. 5. From the intersection of the curves, the value for the effective α is approximately 1.015, and the number of stages in the column under the stated conditions is approximately 23. This yields a stage height of 5.5 in. in the exchange column. Considering the many variables in such a determination of the separation factor, the agreement with the single stage data is satisfactory.

During the course of this work there was some concern as to whether NH_2COO^-, the carbamate ion, would exchange rapidly with ammonia gas.

TABLE 12. VALUES USED IN CALCULATION OF N vs α

Run No.	Mole Fraction of N^{15} in Feed	Total[a] Separation	Mole Fraction of N^{15} in Product	D/V[b]	$\alpha - 1$	Number of Stages[c]
3	0.003700	1.062	0.003929	0.230	0.0143	265
					0.0144	17.9
					0.0145	15.5
					0.0150	11.3
					0.0160	8.3
					0.0180	6.1
					0.0220	3.9
5	0.003700	1.156	0.004275	0.844	0.0140	29.2
					0.0150	21.8
					0.0160	18.0
					0.0180	13.3
					0.0220	9.6
6	0.003700	1.142	0.004216	0.0937	0.0140	25.8
					0.0145	22.0
					0.0150	19.5
					0.0155	17.6
					0.0160	16.2
7	0.003700	1.314	0.004856	0.0119	0.0140	22.6
					0.0150	20.8
					0.0180	17.0
					0.0220	13.7

[a] $\frac{(N^{15}/N^{14})_{product}}{(N^{15}/N^{14})_{feed}}$. [b] $\frac{\text{Product withdrawal}}{\text{Interstage flow}}$ [c] Calculated from the assumed $\alpha - 1$.

If carbamate ion were to exchange very slowly, then normal nitrogen would be added at the product end of the system.

A new exchange column was designed and built for this run so that isotopic samples could be taken throughout the length of the column. The column consisted of four sections, each 2½ ft long and 28 mm ID (slightly larger than the former column). Ball joints were used throughout. Between each section was located a sample port, which consisted of a 2-mm stopcock followed by a 12/5 ball joint for attaching the sampling tube. The column is shown in Fig. 6. The total height of the column was 10 ft 10 in., and the packing was ⅛-in. glass helices. Flow rates for run 8 were comparable with runs 1 through 7. The ratio of NaOH to NH_4^+ was reduced in order to improve the reflux efficiency. Total product loss in the reflux was 0.05% of the interstage flow. Samples were taken simultaneously at various heights in the exchange column after 14 hr and again after 16 hr. The results of isotopic analysis of these samples are shown in Table 13 and plotted in Fig. 7.

At equilibrium, a plot of the logarithm of the total separation vs column length would be expected to give a straight line. The slight bend in the curves at the lower corner shows that the system had not quite reached the equilibrium condition. However, the linearity of the remaining portion of the curves substantiates the exchange data and shows that the N content of the solution must be at isotopic equilibrium. If this were not so, a bowing-over of the curve at the upper end would be expected.

COLUMN STUDIES OF THE CALCIUM HYDROXIDE REFLUX

Reflux of the product stream in the proposed carbonate system is accomplished by distilling

ammonia gas from the aqueous phase of the system after calcium hydroxide has been added to it. This reaction must be very efficient; it is desirable that the aqueous effluent stream from the refluxer contain very little ammonia.

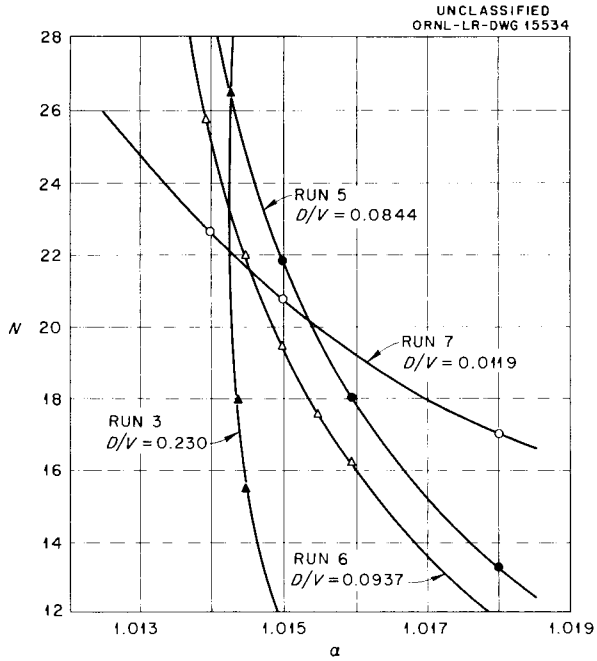

Fig. 5. Values of N vs α Obtained from Column Exchange Runs.

TABLE 13. ISOTOPIC ANALYSES FROM COLUMN-GRADIENT RUN (No. 8)

Time (hr)	Inches of Column*	Total Separation**
14	0	1.0000
	30	1.0446
	62	1.1432
	94	1.2600
	124	1.3630
16	0	1.0000
	30	1.0527
	62	1.1611
	94	1.2817
	124	1.4194

*From feed point.

** $\dfrac{(N^{15}/N^{14})_{sample}}{(N^{15}/N^{14})_{sample\ at\ 0\ in.}}$

Attempts to study this critical reaction in conventional laboratory equipment were unsuccessful because of the deposition of solids on the walls and packing of the reflux column. For this reason, special equipment was designed for determining whether the ammonia content of the effluent calcium carbonate stream could be reduced to the desired level and whether the lime slurry reflux column could be made to operate for extended periods of

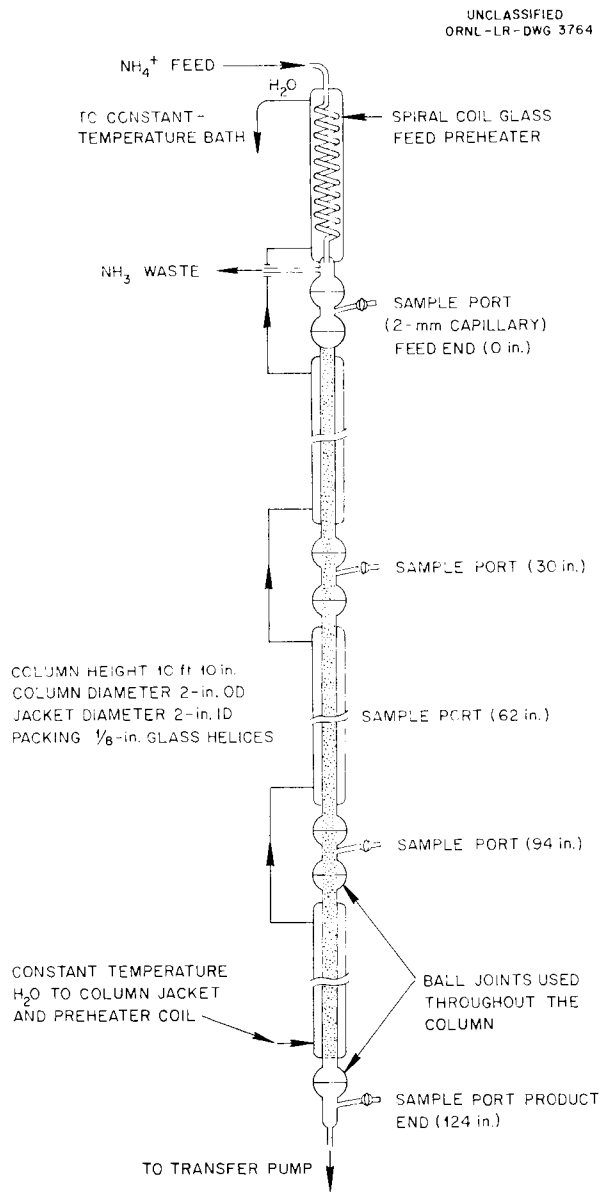

Fig. 6. Exchange Column for Isotopic Gradient Study.

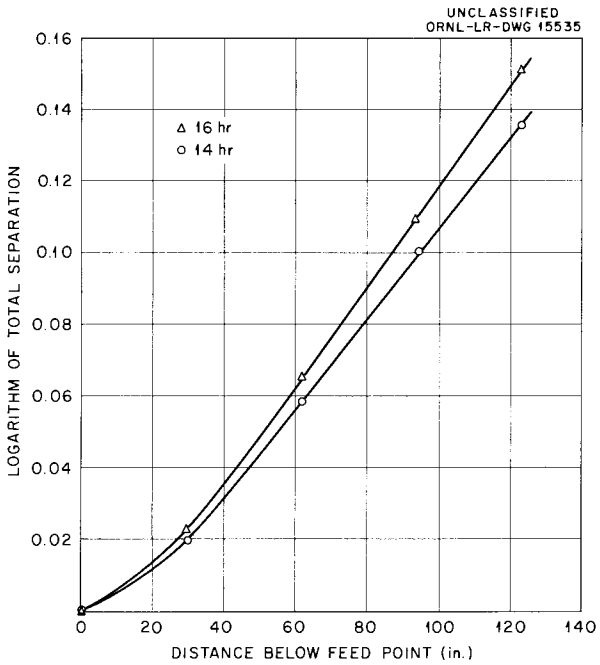

Fig. 7. Isotopic Gradient in the Exchange Column.

time without objectionable solid deposits occurring.

The equipment as finally assembled (Figs. 8 and 9) consisted of a 4-in.-ID glass column 20 ft high with an 18-ft section packed with ½-in. porcelain Intalox saddles. Thermocouple connections and sample point connections were placed at 2-ft intervals along the column and in all process lines entering and leaving the column. The feed point of the column was located in the top section, since the use of a precontact loop was found to make a CO_2 stripping section unnecessary. Steam was fed from a steam chest directly to the base of the column, and the waste stream of $CaCO_3$ and water passed directly to the sewer. The water-cooled condenser and gas scrubber was 6-in.-ID glass pipe 24 in. long. It contained 34 ft of ⅜-in. stainless steel tubing as the cooling coil. Stainless steel Demister material packed into the condenser acted as a scrubber for the condensed moisture in the gas. The ammonia absorption tank and the feed makeup tank had a 20-gal capacity; each was jacketed, baffled, and provided with agitation. Addition of ammonium carbonate solution to the reflux column was controlled by a Pulsafeeder pump with a capacity of 2.9 gph. Two 70-gal agitated tanks were used in making up the calcium hydroxide slurry. The slurry was fed at a controlled rate by a finger pump.

It was found that, to avoid plugging of the column with $CaCO_3$, it was necessary to precontact the ammonium carbonate solution with hot lime slurry in a loop. This precontact loop was constructed largely of 2-in.-ID glass pipe. Circulation and agitation within the contactor was provided by a 1-hp centrifugal pump with a capacity of 20 gpm. Total volume holdup of the contact loop was 10.5 liters. Two thermocouples and a pressure gage provided data on the operation of the unit. Heating tapes on one section of the loop and on the feed lines to the column ensured that the proper temperature would be reached before the slurry was introduced into the packed column.

Initial runs were of short duration – to check the equipment and to find the best operating conditions. After the runs were completed, the column was washed with water. No calcium carbonate was found precipitated on the packing or on the walls of the column. The reaction appeared to go to completion in the contact loop, since no carbon dioxide was detectable in the condenser of the column. It was found that slurries of calcium hydroxide of about 1 *M* had better flow characteristics than did the 2 *M* slurries and that, unlike the latter, they did not jell in the contact loop or in the column.

After the best conditions for operating the equipment had been determined, attention was turned to the problem of stripping ammonia from the solution in the contact loop. Preliminary runs were made by using concentrated aqueous ammonium hydroxide solution, which was metered into the feed point of the packed column. A heat exchanger in the feed line raised the temperature of the solution to its boiling point. As the ammonium hydroxide entered the packed column, it decomposed into ammonia and water. Steam entering the bottom section of the column stripped the remaining traces of ammonia from the water going down the column. The stripped water solution was sampled and the remainder discarded. The overhead vapors from the column were cooled, and the condensed liquid was returned to the column as reflux. The noncondensed vapor (ammonia gas) was absorbed in water and re-used as feed solution. Figure 10 shows the concentration gradient in the column during a typical run. About 18 stages were necessary to reduce the ammonia content of

the effluent stream from the column to approximately 1 mg of NH_3 per liter. After this successful performance on ammonium hydroxide solutions, runs were made to determine the minimum number of stages necessary to reduce the ammonia content of the calcium carbonate slurry to an acceptably low value.

The feed solution for these runs was prepared by absorbing the required amount of CO_2 in a solution of concentrated ammonium hydroxide.

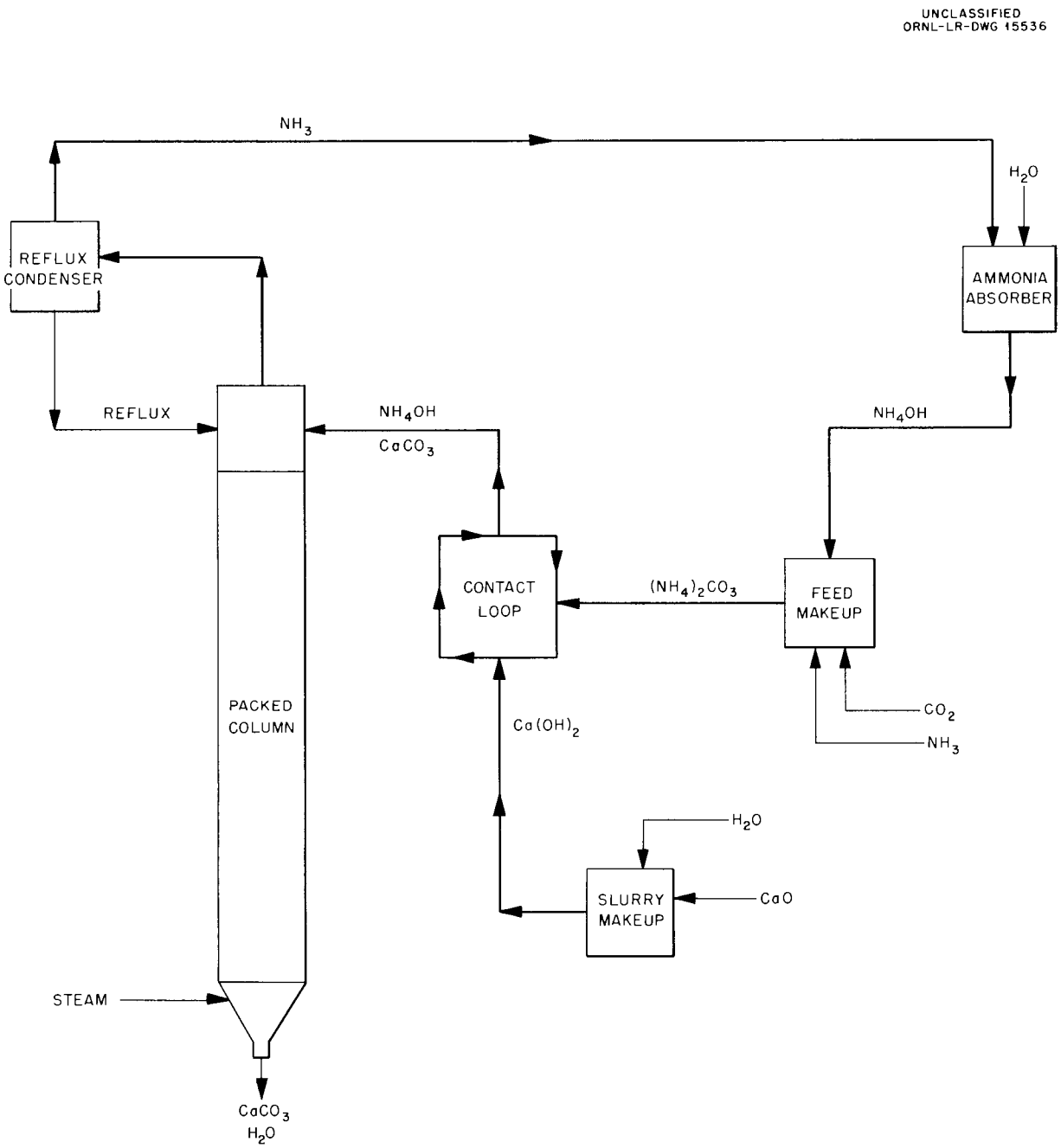

Fig. 8. Schematic Process Flow Diagram of Pilot Plant.

After the addition of the CO_2 was completed, the resulting solution was maintained at 30°C and saturated with ammonia gas. The solution was 17 to 19 *M* in total nitrogen and 4 to 6 *M* in total carbon dioxide.

In operation, the calcium hydroxide slurry and the ammonium carbonate solution were metered into the contact loop, heat was applied, and the reaction was allowed to go to completion. Residence time in the loop was approximately 30 min.

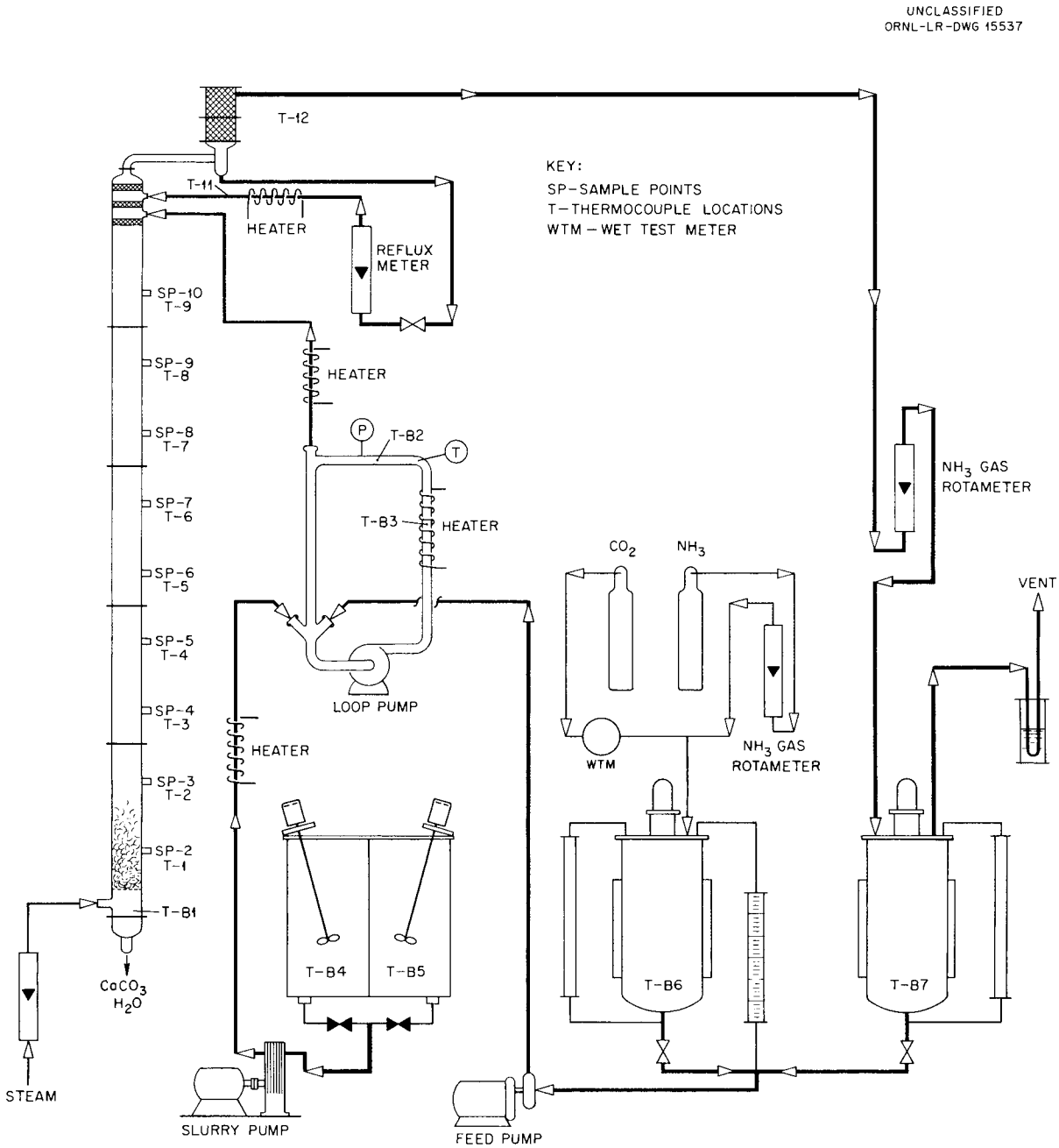

Fig. 9. Equipment Flow Diagram of Pilot Plant.

The material from the contact loop flowed through a heat exchanger, where the temperature was raised to 80°C, and was then allowed to flash into the packed column, releasing the ammonia. Steam was metered into the bottom of the stripping column. The slurry leaving the column was discharged, after being sampled, to the sewer.

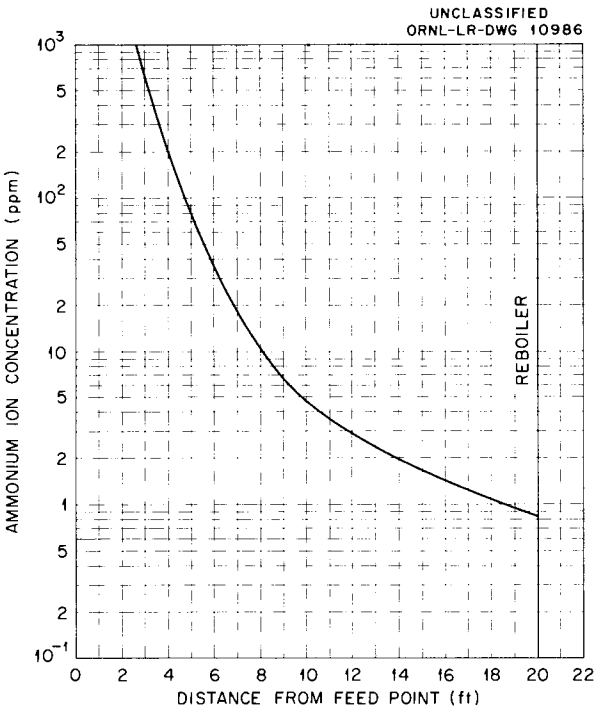

Fig. 10. Ammonium-Ion Distribution in a Packed-Column Distillation of Ammonia from Ammonium Hydroxide.

A comparison of the results of the runs is given in Table 14. It was found that in the three runs the ammonia concentration of the total slurry effluent from the column ranged between 10 and 45 mg of NH_3 per liter. The composition of the bottoms sample from the column for the runs is given in Table 15.

These semi-pilot-scale experiments have demonstrated quite well that the buildup of solids in the packing of the refluxer column can be reduced to a satisfactory level by reacting the ammonium carbonate and calcium hydroxide streams prior to their introduction into the refluxer. Adequate ammonia removal has been demonstrated. Under present operating conditions, the ammonia remaining in the slurry after distillation varies from 10 to 45 mg/liter. These trace quantities seem

TABLE 15. COLUMN EFFLUENT SAMPLES

Total ammonia, ppm	10–45
Ammonia in supernatant liquid, ppm	2–4
Calcium hydroxide, *M*	0.05–0.07
Calcium carbonate, *M*	0.36–0.60
Metal-ion contaminants, ppm	
Cobalt	1
Copper	0.21
Chromium	0.02

TABLE 14. SUMMARY AND COMPARISON OF RUNS WITH CALCIUM CARBONATE–CALCIUM HYDROXIDE SLURRY

	Run 11	Run 12	Run 13
Effective length, stripping section, in.	216	216	318.0
Concentration of feed, *M*			
NH_3	18.1	18.1	17.5
CO_2	4.67	5.10	5.4
$Ca(OH)_2$	0.95	1.15	1.1
NaOH		0.01	
Concentration of NH_3 in column effluent, ppm	11.6	22.0	42.4
Number of stages necessary to obtain a loss equal to 1 ppm NH_3	15.2	18.8	
Column length necessary to obtain a loss equal to 1 ppm NH_3, ft	24.8	24.6	

to be occluded in the calcium carbonate. The amount of occluded ammonia varies with the pressure or concentration of ammonia in the precontact loop. Metal ions which form insoluble complexes with ammonia are not present in the effluent from the column in sufficient quantities to appreciably increase the losses of ammonia in the effluent slurry.

BIBLIOGRAPHY

1. H. C. Urey, *J. Chem. Soc.* **1947**, 572.
2. W. Spindel, *J. Chem. Phys.* **22**, 1271–2 (1954).
3. D. E. Wooldridge and F. A. Jenkins, *Phys. Rev.* **49**, 704 (1936).
4. H. Krüger, *Naturwissenschaften* **26**, 445 (1938).
5. H. Krüger, *Z. Physik* **111**, 467–74 (1939).
6. R. Fleishchmann, *Z. Physik* **41**, 14–18 (1940).
7. K. Clusius and E. W. Becker, *Z. Naturforsch.* **2a**, 154–9 (1947).
8. A. K. Mann, *Phys. Rev.* **73**, 412–13 (1948).
9. K. Clusius, *Helv. Chim. Acta* **33**, 2134–52 (1950).
10. A. N. Davenport and E. R. S. Winter, *Trans. Faraday Soc.* **47**, 1160–9 (1951).
11. A. Krauss, German Pat. 632,071 (July 2, 1936).
12. I. Kirshenbaum, *J. Chem. Phys.* **9**, 660 (1941).
13. I. Kirshenbaum and H. C. Urey, *J. Chem. Phys.* **10**, 706–17 (1942).
14. H. G. Thode, *J. Am. Chem. Soc.* **62**, 581–3 (1940).
15. M. H. Wahl, J. F. Huffman, and J. A. Hipple, Jr., *J. Chem. Phys.* **3**, 434–5 (1935).
16. D. A. Hutchison, *Phys. Rev.* **75**, 1303 (1949).
17. W. Spindel, E. H. MacLaren, R. H. Johns, R. P. Lanni, G. W. Reynolds, and O. E. Lanford, *Concentration of Nitrogen-15 by Chemical Exchange Between* NO_2 *and NO*, AECU-2656.
18. A. Christodulu, R. P. Lanni, A. O. Long, and W. Spindel, *Semi-Annual Progress Report, June 15, 1953 to January 30, 1954*, New York State Teachers College (March 1, 1954).
19. E. Leifer, *J. Chem. Phys.* **8**, 301–3 (1940).
20. H. C. Urey and A. H. W. Aten, Jr., *Phys. Rev.* **50**, 575 (1936).
21. I. Roberts, H. G. Thode, and H. C. Urey, *J. Chem. Phys.* **7**, 137–8 (1939).
22. C. A. Hutchison, D. W. Stewart, and H. C. Urey, *J. Chem. Phys.* **8**, 532–7 (1940).
23. H. C. Urey, J. R. Huffman, H. G. Thode, and M. Fox, *J. Chem. Phys.* **5**, 856 (1937).
24. I. Kirshenbaum, J. S. Smith, T. Crowell, J. Graff, and R. McKee, *J. Chem. Phys.* **15**, 440 (1947).
25. H. C. Urey, M. Fox, J. R. Huffman, and H. G. Thode, *J. Am. Chem. Soc.* **59**, 1407 (1937).
26. H. G. Thode and H. C. Urey, *J. Chem. Phys.* **7**, 34 (1939).
27. K. Clusius, E. Becker, and H. Lauckner, *Chem. Zentr.* **113**(II), 1089 (1942).
28. K. Clusius and E. Becker, *Z. physik. Chem.* **193**, 64 (1943).
29. E. W. Becker and H. Baumgärtel, *Z. Naturforsch.* **1**, 514 (1946).
30. E. W. Becker and H. Baumgärtel, *Angew. Chem.* **A59**, 88 (1947).

31. A. Sugimoto, *Kagaku* **19**, 245–52 (1949).

32. A. Sugimoto, R. Nakane, R. Shibata, T. Watanabe, S. Motonaga, and S. Isomura, *Repts. Sci. Research Inst. (Japan)* **26**, 1 (1950).

33. A. Sugimoto, R. Nakane, T. Watanabe, T. Matsuo, S. Isomura, and M. Morishita, *Repts. Sci. Research Inst. (Japan)* **27**, 19 (1951).

34. A. Sugimoto, R. Nakane, and T. Watanabe, *Bull. Chem. Soc. Japan* **24**, 153 (1951).

35. R. Nakane, *Repts. Sci. Research Inst. (Japan)* **28**, 276 and 413 (1952).

36. A. Sugimoto, R. Nakane, T. Watanabe, S. Isomura, and K. Morishita, *Repts. Sci. Research Inst. (Japan)* **29**, 81 (1953).

37. W. P. Senett, R. W. Pierce, and T. I. Taylor, *Annual Progress Report; Separation of Isotopes by Chemical Diffusion Columns*, NYO-623 (July 25, 1950).

38. W. P. Senett, R. W. Pierce, F. Gollob, and T. I. Taylor, *Annual Progress Report; Separation of Isotopes by Chemical Diffusion Columns*, NYO-624 (Aug. 20, 1951).

39. W. P. Senett, R. W. Pierce, F. Gollob, and T. I. Taylor, *Annual Progress Report; Separation of Isotopes by Chemical Diffusion Columns*, NYO-625 (July 15, 1952).

40. W. P. Senett, F. Gollob, I. Stacy, G. Panson, R. W. Pierce, I. Chasalow, H. H. Kramer, F. Gould, and T. I. Taylor, *Annual Progress Report; Separation of Isotopes*, NYO-6239 (July 1, 1953).

41. T. I. Taylor and W. Spindel, *J. Chem. Phys.* **16**, 635 (1948).

42. J. Shacter and G. A. Garrett, *Analogies Between Gaseous Diffusion and Fractional Distillation*, AECD-1940, p 21 (May 7, 1948).

43. H. C. Urey, private communication, Dec. 12, 1951.

44. J. W. Mellor, *A Comprehensive Treatise on Inorganic and Theoretical Chemistry*, **II**, 792, Longmans, Green, London, 1922.

45. E. Terres and H. Weiser, *Z. Elektrochem.* **27**, 177 (1921).

46. E. Jänecke, *Z. Elektrochem.* **35**, 716 (1929).

47. A. Guyer and T. Piechowicz, *Helv. Chim. Acta* **27**, 858 (1944).

48. G. H. Burrows and G. N. Lewis, *J. Am. Chem. Soc.* **34**, 993 (1912).