UNCLASSIFIED

MARTIN MARIETTA ENERGY SYSTEMS LIBRARIES
3 4456 0361028 8

CENTRAL RESEARCH LIBRARY
DOCUMENT COLLECTION

ORNL-2139
Progress
cy. 5

ELECTRONUCLEAR RESEARCH DIVISION

SEMIANNUAL PROGRESS REPORT

FOR PERIOD ENDING MARCH 20, 1956

CENTRAL RESEARCH LIBRARY
DOCUMENT COLLECTION

LIBRARY LOAN COPY

DO NOT TRANSFER TO ANOTHER PERSON

If you wish someone else to see this document, send in name with document and the library will arrange a loan.

OAK RIDGE NATIONAL LABORATORY
OPERATED BY
UNION CARBIDE NUCLEAR COMPANY
A Division of Union Carbide and Carbon Corporation
UCC
POST OFFICE BOX P · OAK RIDGE, TENNESSEE

UNCLASSIFIED

LEGAL NOTICE

This report was prepared as an account of Government sponsored work. Neither the United States, nor the Commission, nor any person acting on behalf of the Commission:

A. Makes any warranty or representation, express or implied, with respect to the accuracy, completeness, or usefulness of the information contained in this report, or that the use of any information, apparatus, method, or process disclosed in this report may not infringe privately owned rights; or

B. Assumes any liabilities with respect to the use of, or for damages resulting from the use of any information, apparatus, method, or process disclosed in this report.

As used in the above, "person acting on behalf of the Commission" includes any employee or contractor of the Commission to the extent that such employee or contractor prepares, handles or distributes, or provides access to, any information pursuant to his employment or contract with the Commission.

UNCLASSIFIED

ORNL-2139

ay. 5

Contract No. W-7405-eng-26

ELECTRONUCLEAR RESEARCH DIVISION

SEMIANNUAL PROGRESS REPORT

for

Period Ending March 20, 1956

Robert S. Livingston, Director

Edited by
F. T. Howard

DATE ISSUED

SEP 13 1956

OAK RIDGE NATIONAL LABORATORY
Operated by
UNION CARBIDE NUCLEAR COMPANY
A Division of Union Carbide and Carbon Corporation
Post Office Box P
Oak Ridge, Tennessee

MARTIN MARIETTA ENERGY SYSTEMS LIBRARIES

3 4456 0361028 8

UNCLASSIFIED

ORNL-2139
Progress

INTERNAL DISTRIBUTION

1. C. E. Center
2. Biology Library
3. Health Physics Library
4-6. Central Research Library
7. Reactor Experimental Engineering Library
8-11. Laboratory Records Department
12. Laboratory Records, ORNL R.C.
13. A. M. Weinberg
14. L. B. Emlet (K-25)
15. J. P. Murray (Y-12)
16. J. A. Swartout
17. E. H. Taylor
18. E. D. Shipley
19. S. C. Lind
20. M. L. Nelson
21. W. H. Jordan
22. R. R. Dickison
23. C. P. Keim
24. R. S. Livingston
25. F. L. Culler
26. E. J. Murphy
27. A. H. Snell
28. A. Hollaender
29. M. T. Kelley
30. G. E. Boyd
31. K. Z. Morgan
32. T. A. Lincoln
33. A. S. Householder
34. C. S. Harrill
35. C. E. Winters
36. D. W. Cardwell
37. E. M. King
38. D. D. Cowen
39. P. M. Reyling
40. G. C. Williams
41. R. J. Jones
42. A. L. Boch
43. B. L. Cohen
44. F. T. Howard
45. J. S. Luce
46. J. A. Martin
47. A. M. Perry
48. A. Zucker
49. R. W. Johnson
50. J. A. Lane
51. M. J. Skinner
52. S. J. Cromer
53. R. A. Charpie
54. M. R. Donaldson
55. ORNL – Y-12 Technical Library, Document Reference Section

EXTERNAL DISTRIBUTION

56. R. F. Bacher, California Institute of Technology
57. Division of Research and Development, AEC, ORO
58-460. Given distribution as shown in TID-4500 under Physics category

DISTRIBUTION PAGE TO BE REMOVED IF REPORT IS GIVEN PUBLIC DISTRIBUTION

CONTENTS

PREVIOUS PROGRESS REPORTS vii

PAPERS PRESENTED DURING THE PERIOD vii

ARTICLES PUBLISHED viii

ARTICLES SUBMITTED FOR PUBLICATION viii

ABSTRACT 1

THE 63-INCH CYCLOTRON 1

- Activation Experiments 1
- Light-Particle Spectrometry 3
- 63-Inch Analyzing Magnet 3
- 63-Inch Cyclotron Operation 4

THE 86-INCH CYCLOTRON 4

- Installation of Beam-Deflector System 4
- Nuclear Physics Research 5
- Low-Intensity Isotope Separator 5
- Cyclotron Operation 6

ELECTRONUCLEAR MACHINES 6

- Bev Accelerator Study 6
- The 48-Inch Heavy-Particle Cyclotron 10

SPECIAL SEPARATIONS 11

- Calutron Performance 11
- Plutonium Recovery and Chemical Processing 12
- New Feed Materials 12
- Isotope Shipments 13

OPERATIONS SUMMARY 14

ORGANIZATION CHART 15

PREVIOUS PROGRESS REPORTS

Progress reports have been issued by the Electronuclear Research Division for the periods ending on the dates listed below:

Y-495	September 30, 1949
Y-548	December 31, 1949
Y-584	March 31, 1950
Y-637	June 30, 1950
Y-676	September 30, 1950
Y-722	December 31, 1950
Y-767	March 31, 1951
Y-795	June 30, 1951
ORNL-1173	September 30, 1951, Part I
ORNL-1235	September 30, 1951, Part II
ORNL-1269	December 31, 1951, Part I
ORNL-1270	December 31, 1951, Part II
ORNL-1315	March 31, 1952, Part II
ORNL-1339	March 31, 1952, Part I
ORNL-1345	June 30, 1952, Part I
ORNL-1346	June 30, 1952, Part II
ORNL-1383	September 30, 1952
ORNL-1531	March 20, 1953
ORNL-1663	September 20, 1953
ORNL-1670	March 20, 1954
ORNL-1795	September 20, 1954
ORNL-1884	March 20, 1955
ORNL-2030	September 20, 1955

PAPERS PRESENTED DURING THE PERIOD

R. S. Livingston, *Trends in the Design of Cyclotrons After 25 Years*, Nuclear Engineering and Science Congress, Cleveland, Ohio, December 12–16, 1955.

B. L. Cohen, A. F. Cohen, and H. G. Blosser, *Energy Distribution of Mass-97 Fragments from Thermal Neutron Fission of* U^{235}, American Physical Society, New York City, January 30–February 3, 1956.

C. D. Goodman and J. L. Need, *Energy Distribution of Light Particles from Nitrogen-Induced Nuclear Reactions*, American Physical Society, New York City, January 30–February 3, 1956.

H. L. Reynolds, D. W. Scott, and A. Zucker, *Nuclear Reactions Produced by Nitrogen on Boron and Oxygen*, American Physical Society, New York City, January 30–February 3, 1956.

A. Zucker, W. H. Webb, and H. L. Reynolds, *Nitrogen-Induced Nuclear Reactions in Aluminum*, American Physical Society, New York City, January 30–February 3, 1956.

R. E. Worsham and R. S. Livingston, *A Fixed-Frequency Electron Cyclotron with Azimuthally Varying Magnetic Fields. I. General Description*, American Physical Society, New York City, January 30–February 3, 1956.

H. M. Moseley and R. E. Worsham, *A Fixed-Frequency Electron Cyclotron with Azimuthally Varying Magnetic Fields. II. Magnet Design*, American Physical Society, New York City, January 30–February 3, 1956.

ARTICLES PUBLISHED

H. G. Blosser, C. D. Goodman, T. H. Handley, and M. L. Rudolph, "14-Mev (n,α) Cross-Section Measurements," *Phys. Rev.* **100,** 429–430 (1955).

H. G. Blosser and T. H. Handley, "Survey of (p,n) Reactions at 12 Mev," *Phys. Rev.* **100,** 1340 (1955).

B. L. Cohen, "(p,γ) Cross Sections," *Phys. Rev.* **100,** 206 (1955).

F. L. Green, "Proton Beam Study in a Fixed-Frequency Cyclotron," *IRE Transactions, PGNS,* **NS-3,** 8 (1956).

H. L. Reynolds and A. Zucker, "Cyclotron Ion Source for the Production of N^{3+}," *Rev. Sci. Instr.* **26,** 894 (1955).

H. L. Reynolds and A. Zucker, "Nuclear Reactions Produced by Nitrogen on Nitrogen," *Phys. Rev.* **101,** 166 (1956).

ARTICLES SUBMITTED FOR PUBLICATION

B. L. Cohen, "Proton-Induced Reactions in Na^{23}, Al^{27}, and Si^{29}," to *The Physical Review.*

M. R. Donaldson, "An Approximate Method for Obtaining the VSW on Cyclotron Dees," to *Institute of Radio Engineers Transactions, Professional Group on Nuclear Science.*

R. S. Livingston, "Trends in the Design of Cyclotrons After 25 Years," to *Industrial and Engineering Chemistry.*

G. H. McCormick, H. G. Blosser, B. L. Cohen, and E. Newman, "(p,He^3) and (p,t) Cross-Section Measurements," to *Journal of Nuclear and Inorganic Chemistry.*

J. A. Martin and F. L. Green, "Cyclotron Target for the Irradiation of Chemical Compounds," to *Nuclear Science and Engineering.*

H. L. Reynolds, D. W. Scott, and A. Zucker, "Nuclear Reactions Produced by Nitrogen on Boron and Oxygen," to *The Physical Review.*

W. H. Webb, H. L. Reynolds, and A. Zucker, "Nitrogen-Induced Nuclear Reactions in Aluminum," to *The Physical Review.*

ELECTRONUCLEAR RESEARCH DIVISION SEMIANNUAL PROGRESS REPORT

ABSTRACT

The ORNL 63-Inch Cyclotron was operated routinely; 26-Mev N^{3+} ions were used in a study of nitrogen-induced reactions on Na^{23}, and the light-particle spectrometer was used in an investigation of the energy distribution of alpha particles induced by nitrogen on several light elements.

The beam-deflector system of the 86-in. cyclotron was placed in operation; the proton beam is now either used at high current for bombarding internal isotope-production targets or deflected to basic research targets up to 32 ft from the cyclotron. The resonant system of the 48-in. heavy-particle cyclotron was test-operated; until a new magnet is built, it will be used ta accelerate protons to $\sim$5 Mev.

Studies are continuing on the development of plans for a fixed-frequency cyclotron with an azimuthally varying magnetic field to operate in the 1-bev energy range; a Cyclotron Analogue is being constructed for the study of associated resonance problems.

Additional quantities of plutonium isotopes were enriched and placed in inventory; additional high-level feed was obtained for future processing.

THE 63-INCH CYCLOTRON

The ORNL 63-Inch Cyclotron has been in scheduled operation most of the time for the past six months. The machine produces an external beam of $\sim$2 μa of 26-Mev N^{3+} particles. In activation experiments sodium was bombarded to yield P^{32} and Si^{31}. A light-particle spectrometer was used for measuring the energy distribution of protons and alpha particles produced by the nitrogen bombardment of various light elements. An analyzing magnet is being built for the study of stable product nuclei from nitrogen-induced reactions.

ACTIVATION EXPERIMENTS

Sodium bromide targets were bombarded with nitrogen ions in a study of the two reactions $Na^{23}(N^{14},\alpha p)P^{32}$ and $Na^{23}(N^{14},\alpha 2p)Si^{31}$. Reaction yields were determined by absolute beta counting. No chemical separation was necessary for the P^{32} identification; after several days, the short-lived activities decayed and the 14-day P^{32}, being the only radioactive nuclide left, was readily identified by its half life. Chemical separation was needed before the activity of the 2.6-hr Si^{31} could be counted. The incident energy was varied from 14 to 26 Mev by thin nickel absorbers placed in the beam. The thick target yields obtained were differentiated to obtain the excitation functions shown in Fig. 1.

The cross sections obtained at 26-Mev laboratory energy were compared with the predictions of the statistical theory of nuclear reactions. The observed P^{32} and Si^{31} may be formed by decay of the compound nucleus A^{37} by several routes, for example, $A^{37} \longrightarrow Cl^{36} + p$; $Cl^{36} \longrightarrow P^{32} + \alpha$; and $P^{32} \longrightarrow Si^{31} + p$. The probability of the first step relative to other modes of decay of A^{37} is given by $F_p/\Sigma F$ in the statistical evaporation theory of Blatt and Weisskopf.[1] Two sets of F functions were calculated by use of different values for a in the level density

$$w = \text{const}\, e^{2\sqrt{aE_r}} .$$

The values were a = 0.65, obtained by interpolation of the values given by Blatt and Weisskopf, and a = 3.63, suggested by experiments analyzed by Lang and LeCouteur.[2]

---

[1] J. M. Blatt and V. F. Weisskopf, *Theoretical Nuclear Physics*, p 365, Wiley, New York, 1952.

[2] J. M. B. Lang and K. J. LeCouteur, *Proc. Phys. Soc. (London)* **A67**, 586 (1954).

The population of the Cl^{36} states formed was determined from the calculated proton energy distribution

$$N(E)dE = \text{const}\ E\ \sigma_c(E)w(E_r)dE \ .$$

For convenience in the numerical work the protons were grouped into adjacent bands 5 Mev wide. The ratio $F_\alpha/\Sigma F$ for the corresponding bands of Cl^{36} levels was then calculated for the average energy of each band, and the population of the P^{32} states (grouped this time into 2-Mev bands) was determined by the energy distribution of the alpha particles. Multiplication of the populations of these P^{32} groups of levels by the appropriate value of $F_p/\Sigma F$ then gave the number of Si^{31} nuclei formed. It was found that the Si^{31} is most likely to be formed in states of low excitation that cannot decay by further emission of particles; thus it was necessary to examine the relative populations of the Si^{31} states. An analogous calculation was made for the other principal decay routes $(pp\alpha)$ and (αpp), and all the results were added.

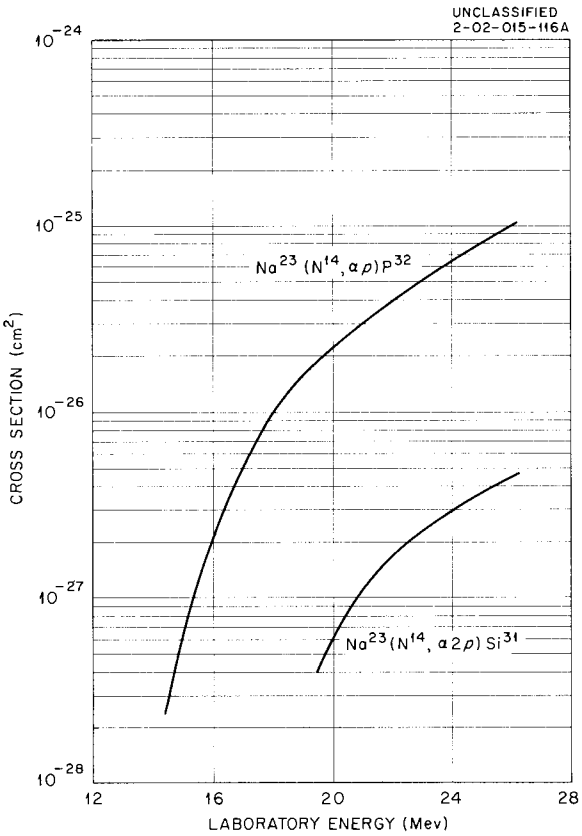

Fig. 1. Excitation Functions for Nitrogen-Induced Reactions on Na^{23}.

For comparison with the magnitude of the experimental cross sections, $\sigma_{A^{37}}$ must be known. This is calculable if the penetrabilities are known, but the existing tables do not cover the full range of parameters needed. A semiclassical approximation,

$$\sigma_c = \pi(R + \lambda\!\!\!^{-})^2 \left[1 - \frac{R}{(R + \lambda\!\!\!^{-})\ E/B}\right] ,$$

is valid if the incident kinetic energy, E, is somewhat larger than the coulomb barrier energy, B; it gives $\sigma_{A^{37}}$ = 439 mb at 26 Mev, where r_0 = 1.50 × 10^{-13} cm for the nuclear radii. If r_0 = 1.66 × 10^{-13} cm, as indicated by the elastic scattering of nitrogen by nitrogen, $\sigma_{A^{37}}$ becomes 820 mb. Since E/B = 1.15 here, the approximation probably underestimates $\sigma_{A^{37}}$.

The results of the calculations, together with the experimental results, are given in Table 1. The ratio of $\sigma_{P^{32}}$ to $\sigma_{Si^{31}}$ is independent of $\sigma_{A^{37}}$ and probably provides a somewhat more meaningful comparison with experiment. The data favor the larger value of a.

TABLE 1. COMPARISON OF CALCULATED VALUES WITH EXPERIMENTAL RESULTS FOR CROSS SECTIONS OF P^{32} AND Si^{31}

	a	$\sigma_{P^{32}}/\sigma_{Si^{31}}$	$\sigma_{P^{32}}$ (mb) (r_0 = 1.50)	$\sigma_{P^{32}}$ (mb) (r_0 = 1.66)
Calculated values	0.65	312	84.2	157
	3.63	54	30.6	57
Experimental results		22 ± 5	97 ± 15	

LIGHT-PARTICLE SPECTROMETRY

The electronics for the particle selective spectrometer[3] were changed to permit easy selection of the particle type to be counted. In the new arrangement the E and dE/dx pulses are displayed on the horizontal and vertical axes of an oscilloscope, and the cathode-ray beam is unblanked when both pulses are at their peaks. The E pulse is also fed to a 20-channel pulse-height analyzer, which is gated by the output of a multiplier phototube viewing the cathode-ray tube. The face of the cathode-ray tube is masked to expose only the locus of the spots of light corresponding to the particle type to be counted.

With this arrangement the energy distributions of alpha particles at zero degrees from nitrogen bombardment of Li^6, Li^7, Be^9, and N^{14} and of protons from Li^6, Li^7, and Be^9 were measured. Preliminary data were obtained on the deuteron and triton energy distributions from the same target elements.

The energy distribution of reaction products from a compound nucleus provides information concerning the level density of the residual nucleus, as can be seen from the relation

$$N(E)dE = \text{const}\ E\ \sigma_c(E) w(E_r) dE \quad ,$$

where $N(E)dE$ is the number of particles emitted at channel energy between E and $E + dE$, $\sigma_c(E)$ is the capture cross section of a particle of energy E by the residual nucleus, and $w(E_r)$ is the level density of the residual nucleus whose excitation is E_r. The value of σ_c can be calculated. If it is assumed that the level density is given by

$$w(E_r) = \text{const}\ e^{2\sqrt{aE_r}} \quad ,$$

a semilogarithmic plot of $N(E)/E\ \sigma_c(E)$ vs $\sqrt{E_r}$ gives the value of the constant a. Figure 2 shows such a plot for the distribution of alpha particles from the reaction $Be^9(N^{14},\alpha)F^{19}$. From this plot $a = 1.0$, a value which agrees with the recent results from (αp) reactions.[4]

The compound nucleus concept was thus investigated by two different techniques: the excitation functions for evaporation-type reactions, and measurements of the energy distribution of the evaporated particles. It is hoped that further systematic study will reveal the usefulness of the statistical theory of nuclear reactions for highly excited light elements.

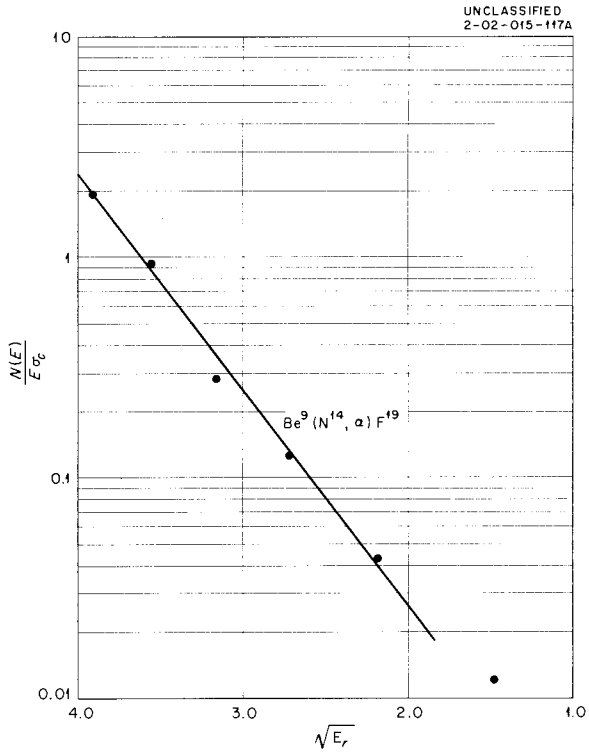

Fig. 2. Energy Distribution of Alpha Particles from the Reaction $Be^9(N^{14},\alpha)F^{19}$.

63-INCH ANALYZING MAGNET

A 90-deg double-focusing magnet is being built for analyzing the reaction products from nitrogen-induced reactions; it will be especially useful in identifying stable reaction products. The design of the magnet support was completed, and fabrication of this structure is expected to be finished in May. The magnet coils were completed and installed. Each coil consists of 256 turns of copper tubing with square cross section whose outside dimensions are approximately 0.250 × 0.250 in. The water passage, also of square cross section, is approximately 0.125 × 0.125 in. The assembled magnet is installed for test purposes at a temporary site. Initial tests, now in progress, indicate that the water cooling is adequate and that the efficiency of the magnet is 10 to 20% higher than

[3] *Electronuclear Research Semiann. Prog. Rep. Sept. 20, 1955*, ORNL-2030, p 11.

[4] R. M. Eisberg, G. Igo, and H. E. Wegner, *Phys. Rev.* 100, 1309 (1955).

was anticipated in the design. The magnet regulating system is installed and is being tested. It is planned that the focusing properties of the magnet will be checked by the "hot-wire" technique as soon as practical. The material (Everdur) for the vacuum tank was received, and fabrication is expected to be completed by May 1. Design of the auxiliary vacuum equipment is in progress.

63-INCH CYCLOTRON OPERATION

The cyclotron was kept in operation a reasonable amount of time but with some difficulty. The problems largely resulted from the limitation in time and costs under which the cyclotron was built. The machine is operated in a section of a Beta magnet; slight shifts in the magnetic field pattern, apparently due to small movements of the magnet components, require considerable readjustment to optimize the beam at the target position. Close spacings, required by the narrow magnetic-field gap, lead to high-voltage breakdowns in the vacuum chamber, which may in turn initiate flashovers across the insulators where the dee stems enter the vacuum chamber. When this results in damaged insulators and loss of vacuum, there is considerable delay for repairs. Conditions contributing to a glow discharge in the region of the ion source, and consequent puncture of the water-jacketed liner, were eliminated by redesigning the structures at the end of the ionization chamber. Modification of the r-f filter systems for the beam deflector resulted in marked improvement in stability of operation.

THE 86-INCH CYCLOTRON

The beam-deflector system of the 86-in. cyclotron is now installed and in operation. Characteristics of both the internal circulating beam and of the deflected beam at various positions were determined. The internal beam is not disturbed by the deflector and is still available for the production of radioisotopes. The deflected beam is used for nuclear experiments at either an intermediate target position or a remote target position 32 ft from the cyclotron.

INSTALLATION OF BEAM-DEFLECTOR SYSTEM

A 21.5-Mev deflected proton beam from the 86-in. cyclotron is now available for experiments in the intermediate target chamber inside the cyclotron shield wall or in a temporary reaction room outside the shield (Fig. 3). Since no radiation shield has yet been provided for the temporary reaction room, the external beam must be limited to a small fraction of a microampere.

After the new system was installed, the first beam was obtained with the magnetic channel removed so that the characteristics of the beam could be determined at the point where the beam passed from the electrostatic deflector into the magnetic channel. The characteristics of the circulating beam were found to be essentially the same as they were before the deflector system was installed. By proper adjustment of the current in the coils which control the position of the beam center of rotation, the deflected beam was made to enter the magnetic channel region in the desired position. The maximum beam current obtained in this entrance was 240 μa.

After the tests on the electrostatically deflected beam were completed, the magnetic channel was installed and a beam was obtained in the intermediate target chamber. A current of 107 μa was metered on a target 5 in. high. The total deflected beam was greater than the metered current; some of the beam passed over and under the target and was not metered. The beam was only 2 in. wide along the magnetic field.

A 1-μa portion of the beam passed through a $\frac{3}{16} \times \frac{1}{2}$ in. slit in the target and into a 12-ft pipe which had a beam pattern at the end of $\frac{3}{4} \times 2\frac{1}{2}$ in. There was no loss of beam between the slit and the collector.

The water-cooled tubes of the septum have operated in circulating beam currents up to 800 μa for 150 hr, and with high velocity water flowing at 250 psi for 1200 hr. During the initial startup period several tubes were found to be obstructed and were removed since it was not practical to replace them. During the repair work other tubes were damaged and removed; three tubes failed for

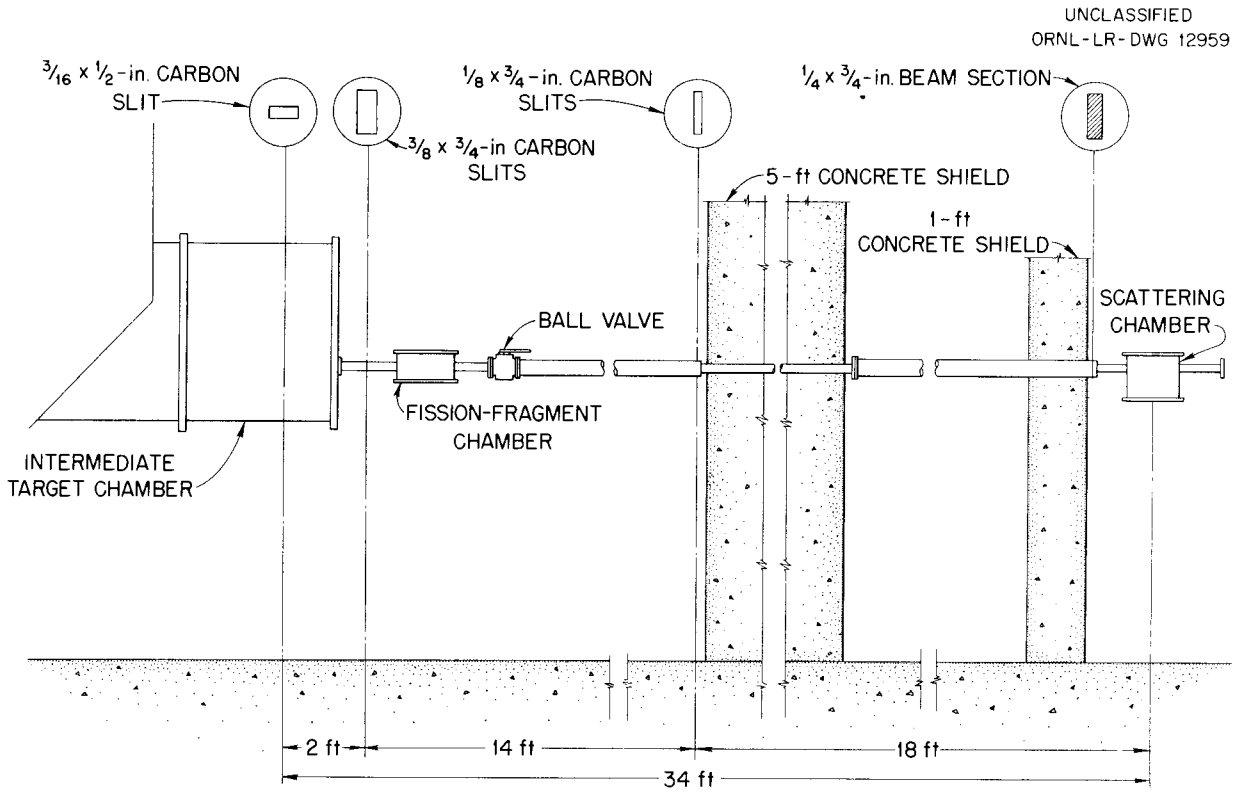

Fig. 3. Beam-Deflector System in 86-in. Cyclotron.

unexplained causes. Only about 60% of the original tubes remain, but the septum still operates satisfactorily.

The magnetic channel performs its functions of bringing the beam across the pole edge just as was predicted from measurements made with a current-carrying wire in tension. The magnetic shims for reducing the disturbance due to the channel proved to be adequate, and no further adjustments were made.

NUCLEAR PHYSICS RESEARCH

A high-resolution magnetic spectrograph was constructed and was installed outside the shield of the ORNL Graphite Reactor for measurements of $H\rho$ distributions of fission fragments of a given mass. The fragments originate in a thin strip of U^{235} near the center of the reactor, come through a 16-ft tube, are magnetically analyzed by a wedge magnet outside the reactor shield, and strike an aluminum foil placed in a focal plane. After exposure, the foil is removed and cut into strips, each corresponding to a given $H\rho$. The strips are radiochemically processed for a given product element, thus determining the fragment mass (Zr^{97} has been used in all work to date), and are counted under end-window Geiger counters. The over-all energy resolution of the spectrograph is 0.8%. With the system at high vacuum, a broad continuous $H\rho$ distribution is obtained with width corresponding to fragment charges 18 to 23. When the fine structure of this distribution was examined, to determine the energy distribution of fragments in a given charge state, only very small variations were observed. This indicates that the width of the energy distribution of mass-97 fragments is approximately 10 to 11% full width at half-maximum.

LOW-INTENSITY ISOTOPE SEPARATOR

A modified calutron-type instrument is being developed for use in the separation and identification of isotopes produced in targets irradiated in the ORNL cyclotrons and reactors. The instrument is designed to operate under feed-limited conditions for 1- to 4-hr periods at temperatures up to 1000°C. The aperture of the ionization chamber

of a Beta-type ion source is reduced to 50 × 1.5 mm. In test operation with several elements ion currents averaged 0.7 to 2 ma. The full width of the focal pattern at half-maximum appeared to be about 2 mm. The ion source efficiency was 2 to 5% with a feed rate of 1 mmole of the element per hour.

CYCLOTRON OPERATION

Operation of the 86-in. cyclotron has been limited to experimentation with the deflected-beam system. As of the end of this period, the beam has been successfully projected into the temporary reaction room, 32 ft from the machine.

ELECTRONUCLEAR MACHINES

BEV ACCELERATOR STUDY

The investigation of the feasibility of producing high-intensity beams of protons at an energy in the vicinity of 1 bev includes an engineering study of a large fixed-frequency cyclotron and a design for a Cyclotron Analogue (electron cyclotron) to be used in testing theoretical predictions and in evaluating engineering design problems.

Studies of accelerator theory indicate that it should be possible to accelerate protons to at least 1 bev in a fixed-frequency cyclotron in which azimuthal magnetic field variations provide focusing forces to overcome the defocusing forces of the radially increasing magnetic field which is necessary to compensate for the relativistic increase in the mass of the protons. The azimuthally varying field (AVF) system makes it possible to keep protons in phase and in focus even as their mass doubles.

The conceptual design of a fixed-frequency AVF cyclotron for 850-Mev protons was given in the preceding progress report.[1] This machine is being studied in an effort to arrive at practical solutions for the great number of engineering problems to be encountered in the design and construction of a large cyclotron of this type. This design study envisions an eight-sector magnet producing eight azimuthal cycles; the sectors are spiraled 72 deg. An artist's concept of the magnet is shown in Fig. 4. The major specifications of the machine are as follows:

Maximum orbit diameter	21 ft
Central flux density	7.9 kilogauss
Maximum flux density	20 kilogauss
Applied radio frequency	24.4 Mc/sec
Total weight of iron	1850 tons

The use of resonant cavities instead of conventional cyclotron dees is being considered for the accelerating system. The magnet is divided into four quadrants by two crossed S-shaped slots. The slots will contain the two resonant cavities, Fig. 5. These cavities will require no clearance for electrical insulation and will represent an important advance in technology, if proved feasible.

Cyclotron Analogue

The major attention has been given to the development of the design of an electron cyclotron to be operated as a Cyclotron Analogue which will be used as a computer for determining particle orbits, characteristics of resonances, deflection properties, threshold voltages, and other design problems. The Cyclotron Analogue will be a four-sector, nonspiraled electron cyclotron. It should produce approximately 220-kv electrons, equivalent relativistically to about 400-Mev protons. The design has been planned so that operation of the machine can be extended later to perhaps as many as eight or more sectors with the appropriate amounts of spiral.

The principal area of uncertainty as to the technical feasibility of a large AVF machine concerns the question of beam stability at the several resonances which occur between the ion orbit frequency and the betatron radial oscillation frequency, or "focusing frequency" as it is sometimes called. When, in a four-sector machine, this ratio is 3/2 (imperfection resonance) or 4/3 (nonlinear resonance), a coupling may occur and cause the amplitude of the radial oscillations to grow destructively. It is possible that many particles

[1] *Electronuclear Research Semiann. Prog. Rep. Sept. 20, 1955*, ORNL-2030, Fig. 8, p 13.

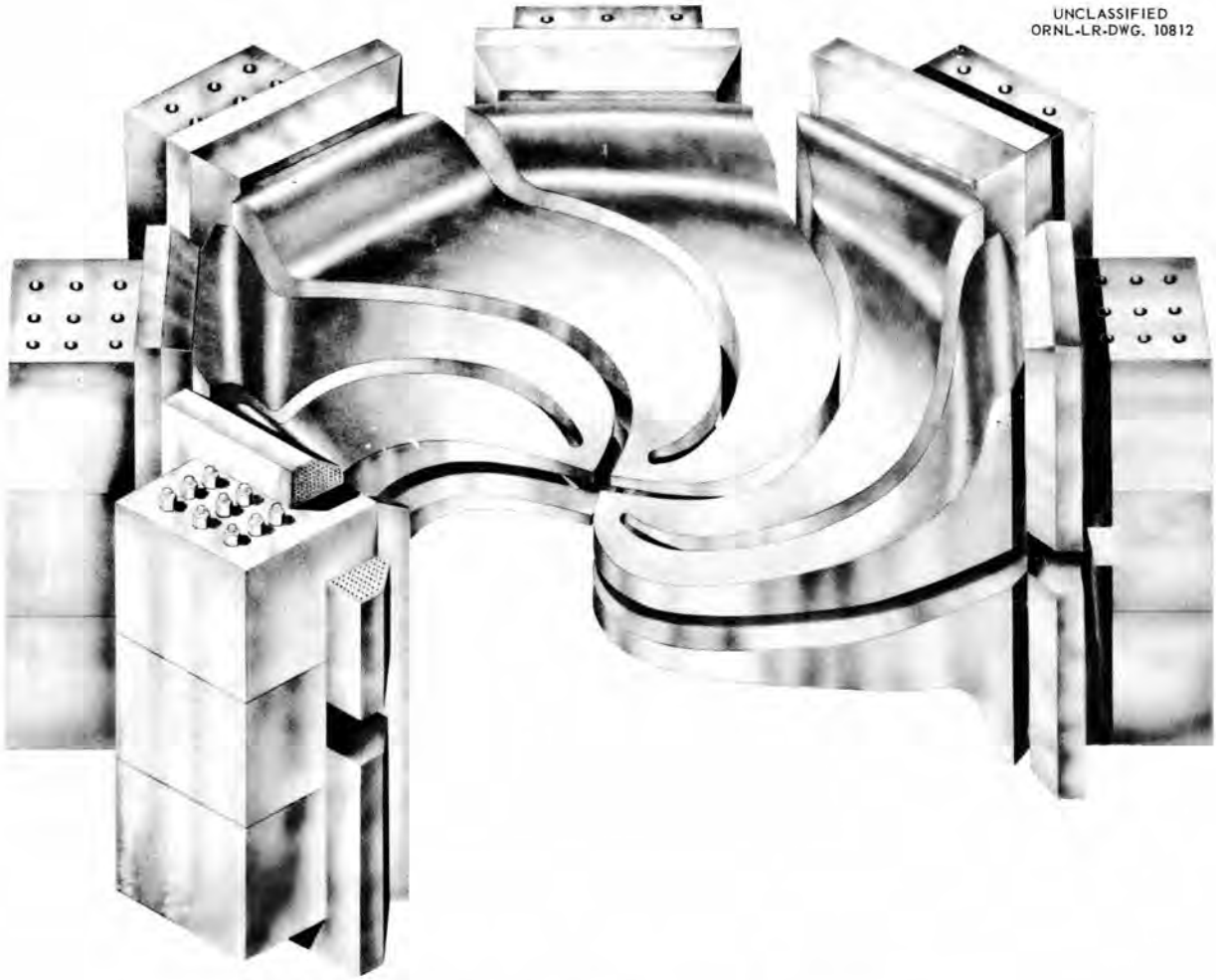

Fig. 4. Sketch of an Eight-Segment Spiraled Magnet.

passing through the machine will be lost in these regions. The imperfection resonance, which arises as a result of the third harmonic component of the field, can be reduced, by careful shimming, to arbitrarily small values; the loss of beam is somewhat a matter of the degree of accuracy which it is practical to achieve. The 4/3 resonance arises from nonlinear effects and cannot be affected by magnetic shimming. It is still important to determine accurately the ion transmission through this 4/3 region.

The prescribed magnetic field shape is shown in Fig. 6. The average field is 40 gauss at the center and increases with radius the appropriate amount necessary to compensate for the increase in electron mass, with 220-kv electrons at about 12 in. The choice of the central field is somewhat arbitrary but represents a compromise between the ease of measuring fields or minimizing stray fields and, on the other hand, keeping the apparatus large enough for convenience of experimentation.

The hill fields go up to about 120 gauss, the valley fields to −25 gauss. The half integral resonance occurs at 156 kv, or at a 9.7-in. average radius. The integral resonance occurs at 220 kv, or at a 10.0-in. average radius; this orbit swings out to about 12 in. at the hills. For threshold voltages of the order of 50 kv, in the equivalent proton machine for 400-Mev protons, an accuracy of ~0.05% is required in the *average* field. The azimuthal field amplitudes need, however, be accurate to only 0.5%. Because of this difference

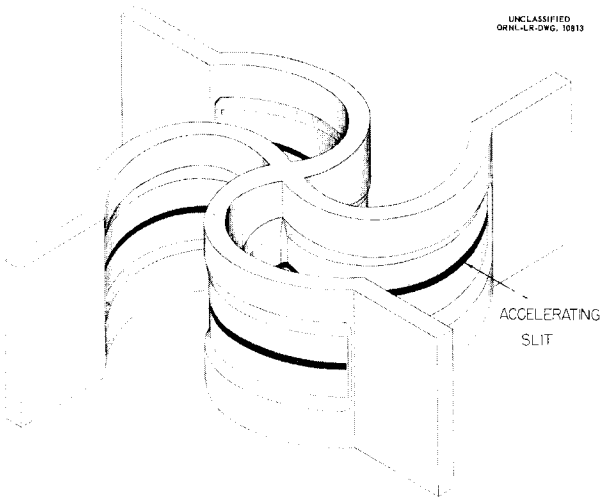

Fig. 5. Two-Cavity Resonant System.

it was decided to produce the two fields separately. Design features of the Analogue are specified below, and the general layout of the electron cyclotron is shown in Fig. 7.

Number of azimuthal cycles	4
Spiral of poles	None
Central magnetic field	40 gauss
Ion frequency	112 Mc/sec
Accelerating frequency	112 Mc/sec
Type of accelerating chamber	2-dee system
Maximum voltage gain/turn	1000 v
Energy at 2/1 resonance	220 kv
Mean radius of 2/1 resonance	11.3 in.
Energy of 3/2 resonance	162 kv
Mean radius of 3/2 resonance	10.3 in.
Energy of 4/3 resonance	118 kv
Mean radius of 4/3 resonance	9.2 in.
Pole face diameter	30 in.
Magnet iron gap	$3\frac{1}{4}$ in.

A section near the edge of the gap is shown in Fig. 8. In sequence are the copper dee wall, the insulators, the copper ground-plate liner, the sector coils for producing increased or decreased fields at the appropriate azimuthal angles, the water-cooled copper plate for cooling the sector coils, the circular trimming coils for correcting the

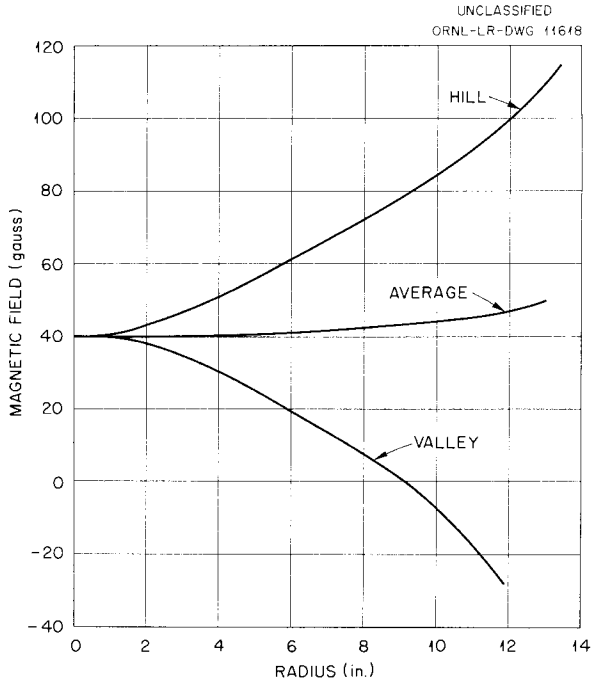

Fig. 6. Configuration of Magnetic Field for Cyclotron Analogue.

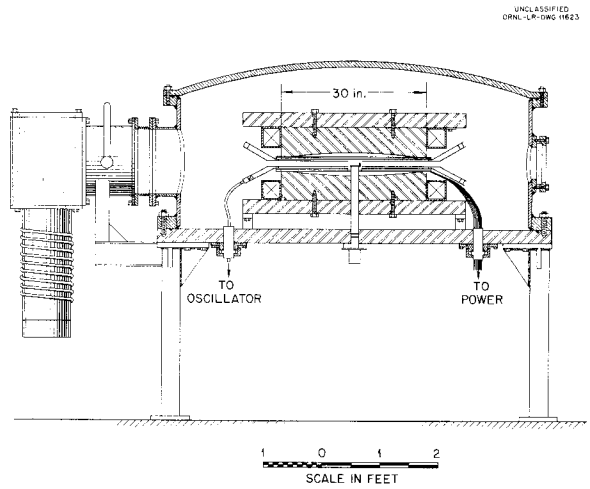

Fig. 7. Section Through Cyclotron Analogue.

average field, and the iron pole piece. The clear gap for experimental work is $1\frac{1}{4}$ in.; the magnet gap is $3\frac{1}{4}$ in.

A plan view of the coils of one sector, Fig. 9, shows a series of triangular coils overlaid by a smaller number of trapezoids. Placement of the

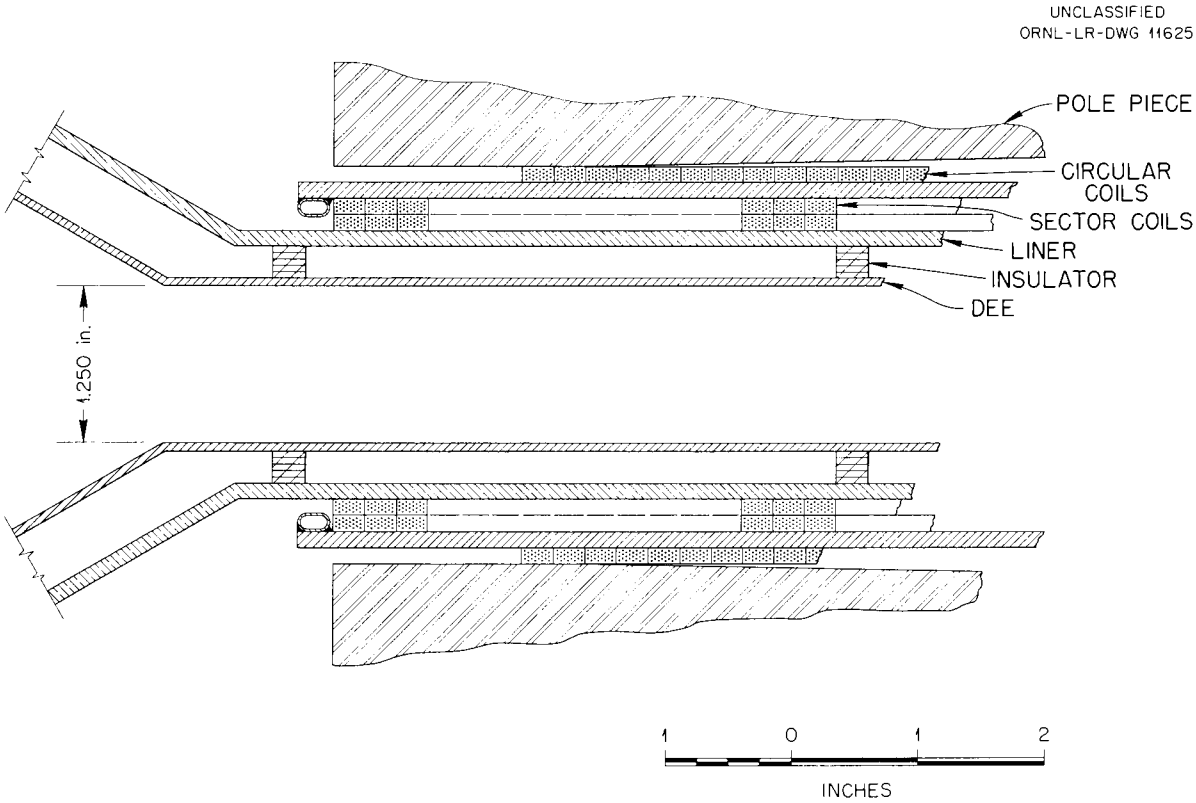

Fig. 8. Internal Details of Cyclotron Analogue.

coils is fixed by pins located in the corners of the triangles or trapezoids. Because of the smaller iron gap near the edge of the machine, the field tends to be too high there; consequently, a second layer of coils is required in order to obtain greater field variation near the center. The cost of a complete set of these coils, including the circular windings which provide correction for the average field, is quite nominal. The sector wound for tests is held together with a resin, Laminac. The resin in turn bonds the windings to a water-cooled copper sheet, which also supports the coil. Each set of 16 series windings will be controlled by a current-regulated power supply. Provision is made for controlling, independently, the current in any coil or group of coils.

The magnetic field will be measured with a flux-gate magnetometer to an accuracy of about 5 milligauss, or 0.05%. The magnetometer pickup will rotate along circles of various radii. Knowledge of the Fourier components of field produced by each coil will permit determination of currents required in each coil to set the field to prescribed values in the median plane.

A number of tests and preliminary design details for the Cyclotron Analogue have been worked out. Techniques were developed for the precision construction of the sector coils which produce the azimuthal variation in magnetic field. A sample coil was constructed and tested. Minor improvements in technique are being made to ensure exact duplication of the coils. A flux-gate magnetometer was constructed; testing and calibration await the delivery of the power supply. A Helmholtz coil was constructed for the calibration of the instrument. Because of the large quantity of plastic materials which must necessarily be inside the vacuum chamber, measurements are being made of the outgassing rates of a number of otherwise suitable materials. A resonant chamber was constructed, and measurements were made of the tuning range and voltage-standing wave along the

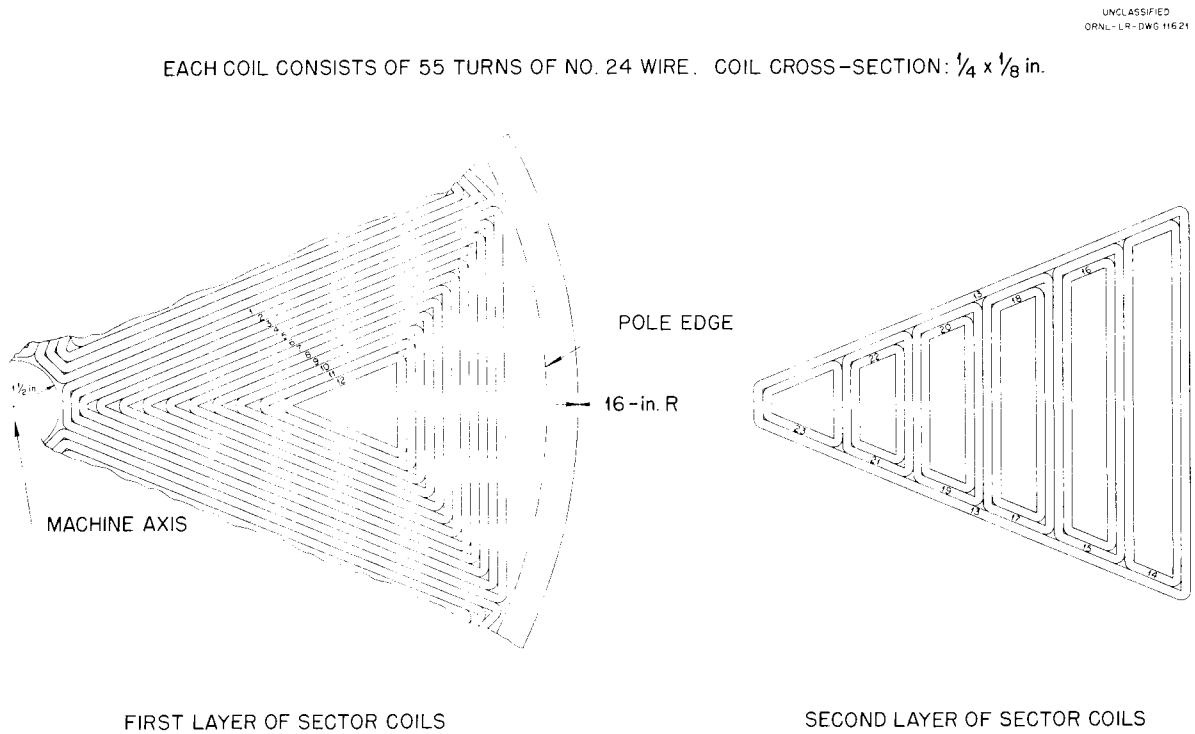

Fig. 9. Sector Coils for Cyclotron Analogue.

edge of the dees. Because of the loose coupling between the two dees, a master-oscillator–power-amplifier r-f system with separate drive to each dee is being considered rather than the oscillator planned originally.

THE 48-INCH HEAVY-PARTICLE CYCLOTRON

The 48-in. heavy-particle cyclotron will operate in a 20,000-oersted magnet and will accelerate carbon and nitrogen ions to approximately 80 Mev. Ions with higher energy may be obtained by utilizing the cyclotron "mode" principle of acceleration. The existing 44-in. cyclotron dees, dee stems, and housing, coupling circuits, vacuum pumping system, and 450-kw d-c input oscillator will be adapted for use in the 48-in. cyclotron system. Test operation of these components has begun.

The fabrication and assembly of the model for the new magnet were completed. Power for excitation of the model was obtained from a 1750-kw motor-generator set installed in Building 9204-3. Since the model requires an excitation power of the order of one-tenth the full load capacity of the power supply used, magnet-current-regulation difficulties were encountered. During the initial test period an accidental current overload resulted in distortion of the support plates for the magnet coil. The cause of the overload was traced to a faulty relay in the motor-generator system. The coil support plates were straightened and the magnet tests were resumed. Tapered pole tips were fabricated and installed during this second test period. Work is in progress toward resolving discrepancies in the data obtained from recent test runs. Evidence indicates that the instrument used to obtain the test data, Dyna-Labs Model D-79 Gaussmeter, exhibits excessive error at fields near 20,000 gauss. Other measuring methods are being used to verify the readings of the Model D-79 instrument, which has a stated accuracy of $\pm 2\frac{1}{2}\%$. Preliminary checks indicate that the D-79 reads within the stated accuracy at fields near 4,000 gauss but that it has an error of approximately 10% near 15,000 gauss.

An extensive study was made to determine the best site for the installation of the 48-in. cyclotron. To evaluate various locations properly, it was necessary to make preliminary engineering sketches

and cost evaluation studies; seven individual plans and locations at X-10 and Y-12 were investigated. It was concluded that the most practical plan in the long-range development of the Laboratory is to locate the 48-in. cyclotron in a new building at X-10.

Until the new magnet and building installations are ready, the 44-in. cyclotron will be operated in a Beta magnet, in Building 9204-3. The overall modification of the cyclotron to provide for high-current operation at proton energies of either 1.5 or 5 Mev is complete. Test operation of the machine was begun, and a small beam was obtained in December 1955. The power input to the oscillator was limited by an excessively high grid current. The maximum grid current for the F-134 tube is 1.8 amp. This maximum grid current was obtained with less than 1 kv on the plate of the tube. Improved conditions were obtained by decreasing the filament coupling to the top dee stem. This was necessarily accomplished in several empirical steps in which the filament coupling loop was shortened. During the process of adjusting the resonant system severe vacuum difficulties developed as a result of a combination of water leaks, outgassing of new components, and a residue of welding flux. The resonant system and vacuum system have both been improved; the work is being continued on a somewhat reduced schedule.

SPECIAL SEPARATIONS

The heavier isotopes of plutonium are separated from highly irradiated plutonium and made available on a Commission-wide basis. The uranium isotopes U^{234}, U^{235}, U^{236}, and U^{238} are separated as required, to maintain an inventory of highly purified materials. In addition to purified isotopes being made available for research purposes, the experience gained in handling special materials in the electromagnetic separation permits continuing evaluation of the process.

Primary emphasis is on the separation of Pu^{240} and Pu^{241} from plutonium derived from uranium fuel elements irradiated to 3000 to 3500 Mwd/ton. Receipt of additional material of this irradiation level alleviated the feed shortage which had existed for 18 months.

The separator development phase of the program centers about the development of a special unit for the separation of small quantities of rare feed materials. In addition to its application to second-stage separations and to the separation of the isotopes of rare non-naturally-occurring elements, the separator will be applicable to the separation of isotopes from targets bombarded in the cyclotrons.

CALUTRON PERFORMANCE

A seventh separation of plutonium isotopes (Table 2) was characterized by unusually high process efficiency. The ratio of well-focused Pu^+ ions to plutonium vaporized as $PuCl_3$ was 10%, an increase of 40% over the best of previous runs.

TABLE 2. RESULTS FOR PLUTONIUM ISOTOPE SEPARATION FROM SEVENTH CALUTRON RUN

	Isotopic Concentration (at. %)				Total Weight (g of Pu)
	Pu^{242}	Pu^{241}	Pu^{240}	Pu^{239}	
Feed vaporized	0.20	1.26	11.22	87.31	93.0
Pu^{240} product					
Batch P7-40-1	0.08	1.04	80.27	18.60	0.6578
Batch P7-40-2	0.04	0.94	74.89	24.14	0.0616
Pu^{241} product					
Batch P7-41-1	1.18	40.73	23.06	35.03	0.1687
Batch P7-41-2	1.00	28.46	36.32	34.22	0.0160

The enrichment factors were lower than those obtained previously, a result of unstable operation because of the wide temperature range over which the charge was vaporized. The plutonium chloride feed was produced by a new process, which is believed to have been responsible for the unusual performance. The feed for this run was derived from the unseparated plutonium vaporized in prior separations of 3000 Mwd/ton plutonium.

PLUTONIUM RECOVERY AND CHEMICAL PROCESSING

A new technique was used for the preparation of anhydrous plutonium chloride feed for the seventh run. A concentrated HCl solution of plutonium chloride was added dropwise to refluxing hexochloropropene. After the removal of water, the product was treated with phosgene at a temperature of 500 to 550°C for 12 hr. Chemical analysis of the chloride produced in this way showed a chlorine content in excess of that required for the compound $PuCl_3$. In the calutron, the operating temperature range of the charge was considerably broader than that experienced with previous charges. A small plutonium beam was obtained at a temperature of about 300°C, but toward the end of the run the required temperature increased to normal, 850 to 900°C; this indicates a mixed compound.

The program initiated to recover approximately 450 g of low g/ton plutonium used during 1952 for the initial separator tests and the production of high-purity Pu^{239} is approximately 30% complete. This plutonium, dispersed on several source units and a vacuum tank liner, has presented a continual storage problem, with the attendant hazard of large-scale contamination of the facilities.

Several hundred grams of plutonium-containing salvage material was processed in an attempt to complete a material balance on the 3000 Mwd/ton plutonium. This was successful to the extent that 80% of the material is in analyzed solutions or solids. It is assumed that the rest of the plutonium remains on the ion sources and vacuum tank liner; it is impracticable to quantitatively determine this plutonium holdup. Ignited solids that resisted various leaching solutions were processed by fusion with potassium pyrosulfate. The first 50% volume reduction by fusions recovers about 90% of the plutonium content; the efficiency of recovery decreases rapidly in successive treatments.

Requirements for depleted uranium metal (high-purity U^{238}) were met by the installation of special equipment to produce UF_4 without the possibility of gross crossover with normal or enhanced uranium. Several batches of UF_4 were produced, and a reduction to metal was made on the composite.

The progressive deterioration of the chlorination and precipitation glove boxes in the plutonium recycle laboratory required their replacement. The interiors of the two boxes were cleaned as completely as possible and coated with heavy grease. The replacement of the boxes was accomplished without incident of airborne alpha-particle activity.

Serious corrosion has been noted in portions of the liner wash facility. The aluminum pipe and spray nozzle heads used with nitric acid solution became unserviceable and were replaced with stainless steel components. The corrosion rate of the permanent equipment such as the liner wash tank, evaporator, and head tanks is being observed carefully since a failure in any of these facilities would allow a serious plutonium spill.

The main CWS filter serving the plutonium processing facilities plugged erratically. The fault, traced to the merging of two gas streams, one being highly acidic and the other having a high ammonia content, was corrected by control of the processing cycle.

NEW FEED MATERIALS

A 143-g batch of plutonium, derived from the central one-third of four highly irradiated uranium fuel elements, was received from the Chemical Technology Division. The plutonium contains 84.19% Pu^{239}, 13.72% Pu^{240}, 1.81% Pu^{241}, and 0.28% Pu^{242}.

Final arrangements were made for obtaining a plutonium-aluminum alloy fuel element containing approximately 200 g of plutonium with 18% Pu^{240} and over 2% Pu^{242}; it will be processed by the Chemical Technology Division.

The fabrication of plutonium fuel elements for irradiation in the MTR progressed at a satisfactory rate. The Los Alamos portion of the program is

approximately 50% complete. Rolling of the fuel plates and assembly of the elements by the Metallurgy Division are scheduled to begin early in the next period.

ISOTOPE SHIPMENTS

The distribution of electromagnetically enriched isotopes of heavy elements to various laboratories since September 1955 is shown in Table 3.

TABLE 3. DISTRIBUTION OF ISOTOPES

Isotope	Shipped To	Amount (mg)	Purity (%)
U^{234}	Los Alamos Scientific Laboratory	5	95.99
	Argonne National Laboratory	11	93.44
	Argonne National Laboratory	21	93.44
	K-25	20	93.44
	Los Alamos Scientific Laboratory	20	93.44
	K-25	20	51.70
	Knolls Atomic Power Laboratory	1,307	17.68
U^{235}	Los Alamos Scientific Loboratory	1,000	99.994
	Oak Ridge National Laboratory, X-10	1,000	99.994
	AEC-NYO	20	99.91
	Argonne Nationol Laboratory	200	99.91
	Argonne National Laboratory	2,945	99.91
	Columbia University	5	99.91
	Los Alamos Scientific Laboratory	10,041	99.76
U^{236}	Los Alamos Scientific Laboratory	18	94.90
	K-25	20	94.77
	Oak Ridge National Laboratory, X-10	3	94.77
	Knolls Atomic Power Laboratory	10,159	57.43
	K-25	20	57.43
U^{238}	Los Alamos Scientific Laboratory	44,944	99.9997
	Los Alamos Scientific Laboratory	30,000	99.9988
	Rensselaer Polytechnic Institute	1,000	99.9956
	Naval Research Laboratory	148,200	99.983
	Los Alamos Scientific Laboratory	19,980	99.983
	Brookhaven National Laboratory	242,400	99.981
	Knolls Atomic Power Laboratory	248,600	99.981
	Brookhaven Notional Laboratory	190,600	99.981
Pu^{240}	Atomic Energy Commission of Canada, Ltd.	252	87.17
Pu^{241}	Atomic Energy Commission of Canada, Ltd.	7	52.37
Th^{230}	Columbia University	3	90.02
	Oak Ridge Institute of Nuclear Studies	4	90.02

OPERATIONS SUMMARY

As shown, the experimental and production runs in Buildings 9204-3 and 9201-2 from September 20, 1955, to March 20, 1956, totaled 275. The distribution of shop time charged to each of the various projects is given in Table 4. The assignment of personnel to the several projects is indicated in the organization chart.

Project	Number of Runs
Special Separations	43
63-Inch Cyclotron	77
44- and 48-Inch Cyclotrons	38
Fundamental Electronuclear Research	117
Total	275

TABLE 4. TIME DISTRIBUTION – MECHANICAL SERVICE AND MACHINE SHOPS

Account Number and Project	Mechanical Service		Machine Shops			
			Carbon		Metal	
	Hours	Per Cent of Total Time	Hours	Per Cent of Total Time	Hours	Per Cent of Total Time
33 Special Separations	4,046.7	19.36	897.2	42.66	379.5	7.79
34 86-Inch Cyclotron Applied Physics	559.4	2.68	36.0	1.71	141.0	2.89
35 86-Inch Cyclotron Operations	4,629.7	22.15	74.0	3.52	595.3	12.21
37 Electronuclear Machines	684.5	3.28	60.0	2.85	370.0	7.59
39 86-Inch Cyclotron Nuclear Physics	168.0	0.80	40.0	1.90	396.0	8.12
40 63-Inch Cyclotron Physics	499.7	2.39			92.0	1.89
41 63-Inch Cyclotron Operations	833.0	3.98	389.5	18.52	142.0	2.91
43 Army Package Power Reactor	247.0	1.18			226.0	4.64
44 44-Inch Cyclotron	849.0	4.06	6.0	0.29	450.4	9.24
46 Fundamental Electronuclear Research	6,164.5	29.49	559.5	26.60	1716.1	35.20
48 48-Inch Cyclotron	1,032.7	4.94	41.0	1.95	350.7	7.19
1 Building Maintenance	1,189.5	5.69			16.0	0.33
Total	20,903.7	100.00	2103.2	100.00	4875.0	100.00

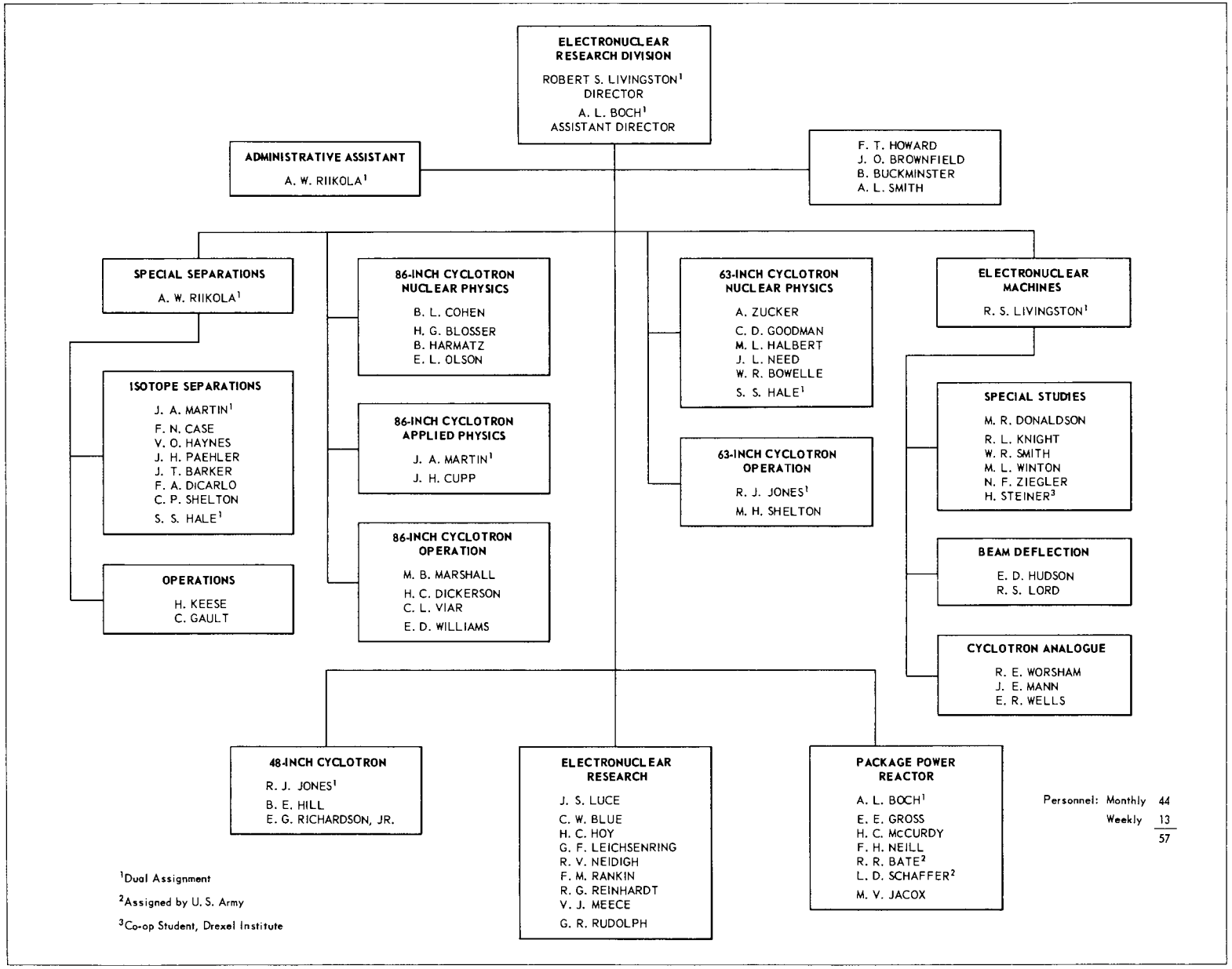
ELECTRONUCLEAR RESEARCH DIVISION
ROBERT S. LIVINGSTON[1]
DIRECTOR
A. L. BOCH[1]
ASSISTANT DIRECTOR
ADMINISTRATIVE ASSISTANT
A. W. RIIKOLA[1]
F. T. HOWARD
J. O. BROWNFIELD
B. BUCKMINSTER
A. L. SMITH
SPECIAL SEPARATIONS
A. W. RIIKOLA[1]
ISOTOPE SEPARATIONS
J. A. MARTIN[1]
F. N. CASE
V. O. HAYNES
J. H. PAEHLER
J. T. BARKER
F. A. DiCARLO
C. P. SHELTON
S. S. HALE[1]
OPERATIONS
H. KEESE
C. GAULT
86-INCH CYCLOTRON NUCLEAR PHYSICS
B. L. COHEN
H. G. BLOSSER
B. HARMATZ
E. L. OLSON
86-INCH CYCLOTRON APPLIED PHYSICS
J. A. MARTIN[1]
J. H. CUPP
86-INCH CYCLOTRON OPERATION
M. B. MARSHALL
H. C. DICKERSON
C. L. VIAR
E. D. WILLIAMS
63-INCH CYCLOTRON NUCLEAR PHYSICS
A. ZUCKER
C. D. GOODMAN
M. L. HALBERT
J. L. NEED
W. R. BOWELLE
S. S. HALE[1]
63-INCH CYCLOTRON OPERATION
R. J. JONES[1]
M. H. SHELTON
ELECTRONUCLEAR MACHINES
R. S. LIVINGSTON[1]
SPECIAL STUDIES
M. R. DONALDSON
R. L. KNIGHT
W. R. SMITH
M. L. WINTON
N. F. ZIEGLER
H. STEINER[3]
BEAM DEFLECTION
E. D. HUDSON
R. S. LORD
CYCLOTRON ANALOGUE
R. E. WORSHAM
J. E. MANN
E. R. WELLS
48-INCH CYCLOTRON
R. J. JONES[1]
B. E. HILL
E. G. RICHARDSON, JR.
ELECTRONUCLEAR RESEARCH
J. S. LUCE
C. W. BLUE
H. C. HOY
G. F. LEICHSENRING
R. V. NEIDIGH
F. M. RANKIN
R. G. REINHARDT
V. J. MEECE
G. R. RUDOLPH
PACKAGE POWER REACTOR
A. L. BOCH[1]
E. E. GROSS
H. C. McCURDY
F. H. NEILL
R. R. BATE[2]
L. D. SCHAFFER[2]
M. V. JACOX
Personnel: Monthly 44
Weekly 13
57
[1]Dual Assignment
[2]Assigned by U. S. Army
[3]Co-op Student, Drexel Institute