UNCLASSIFIED

MARTIN MARIETTA ENERGY SYSTEMS LIBRARIES
3 4456 0361034 0

CENTRAL RESEARCH LIBRARY
DOCUMENT COLLECTION

ORNL-2147
Instrumentation cy. 131

THE SAMPLING OF ALKALI METAL SYSTEMS WITH THE MODIFIED MSA SAMPLER

G. Goldberg
A. S. Meyer, Jr.
J. C. White

CENTRAL RESEARCH LIBRARY
DOCUMENT COLLECTION

LIBRARY LOAN COPY

DO NOT TRANSFER TO ANOTHER PERSON

If you wish someone else to see this document, send in name with document and the library will arrange a loan.

OAK RIDGE NATIONAL LABORATORY
OPERATED BY
UNION CARBIDE NUCLEAR COMPANY
A Division of Union Carbide and Carbon Corporation
UCC
POST OFFICE BOX P · OAK RIDGE, TENNESSEE

UNCLASSIFIED

LEGAL NOTICE

This report was prepared as an account of Government sponsored work. Neither the United States, nor the Commission, nor any person acting on behalf of the Commission:

A. Makes any warranty or representation, express or implied, with respect to the accuracy, completeness, or usefulness of the information contained in this report, or that the use of any information, apparatus, method, or process disclosed in this report may not infringe privately owned rights; or

B. Assumes any liabilities with respect to the use of, or for damages resulting from the use of any information, apparatus, method, or process disclosed in this report.

As used in the above, "person acting on behalf of the Commission" includes any employee or contractor of the Commission to the extent that such employee or contractor prepares, handles or distributes, or provides access to, any information pursuant to his employment or contract with the Commission.

UNCLASSIFIED

ORNL- 2147

Contract No. W-7405-eng-26

ANALYTICAL CHEMISTRY DIVISION

M. T. Kelley, Director
C. D. Susano, Associate Director

THE SAMPLING OF ALKALI METAL SYSTEMS WITH THE MODIFIED MSA SAMPLER

G. Goldberg, A. S. Meyer, Jr., J. C. White

DATE ISSUED

AUG 21 1956

OAK RIDGE NATIONAL LABORATORY
Operated by
UNION CARBIDE NUCLEAR COMPANY
A Division of Union Carbide and Carbon Corporation
Post Office Box P
Oak Ridge, Tennessee

UNCLASSIFIED

3 4456 0361034 0

INTERNAL DISTRIBUTION

1. R. G. Affel
2. C. R. Baldock
3. C. J. Barton
4. D. S. Billington
5. F. F. Blankenship
6. E. P. Blizard
7. C. J. Borkowski
8. G. E. Boyd
9. M. A. Bredig
10. F. R. Bruce
11. A. D. Callihan
12. D. W. Cardwell
13. J. V. Cathcart
14. C. E. Center (K-25)
15. R. A. Charpie
16. C. E. Clifford
17. J. H. Coobs
18. W. B. Cottrell
19. D. D. Cowen
20. S. J. Cromer
21. R. S. Crouse
22. F. L. Culler
23. J. H. DeVan
24. D. A. Douglas
25. E. R. Dytko
26. L. B. Emlet (K-25)
27. M. J. Feldman
28. D. E. Ferguson
29. A. P. Fraas
30. J. H. Frye, Jr.
31. W. T. Furgerson
32. H. C. Gray
33. W. R. Grimes
34. E. E. Hoffman
35. A. Hollaender
36. A. S. Householder
37. J. T. Howe
38. W. H. Jordan
39. G. W. Keilholtz
40. C. P. Keim
41. M. T. Kelley
42. F. Kertesz
43. E. M. King
44. J. A. Lane
45. R. B. Lindauer
46. R. S. Livingston
47. E. C. Lynn
48. R. N. Lyon
49. F. C. Maienschein
50. W. D. Manly
51. E. R. Mann
52. L. A. Mann
53. W. B. McDonald
54. F. R. McQuilkin
55. R. V. Meghreblian
56. R. P. Milford
57. A. J. Miller
58. R. E. Moore
59. K. Z. Morgan
60. J. P. Murray (Y-12)
61. G. J. Nessle
62. R. B. Oliver
63. L. G. Overholser
64. P. Patriarca
65. R. W. Peelle
66. A. M. Perry
67. J. C. Pigg
68. W. G. Piper
69. H. F. Poppendiek
70. H. W. Savage
71. A. W. Savolainen
72. R. D. Schultheiss
73. E. D. Shipley
74. A. Simon
75. O. Sisman
76. G. P. Smith
77. A. H. Snell
78. C. D. Susano
79. J. A. Swartout
80. E. H. Taylor
81. R. E. Thoma
82. D. B. Trauger
83. E. R. VanArtsdalen
84. M. L. Nelson
85. G. M. Watson
86. A. M. Weinberg
87. J. C. White
88. G. D. Whitman
89. E. P. Wigner (consultant)
90. J. C. Wilson
91. C. E. Winters
92. A. S. Meyer, Jr.
93. B. L. McDowell
94. J. P. Young

95. W. F. Vaughan
96. L. J. Brady
97. A. F. Roemer, Jr.
99. R. R. Dickison
100. G. Goldberg
101. R. D. Peak
102. T. W. Gilbert, Jr.
103. J. B. West
104. H. Eyring (consultant)
105. G. T. Seaborg (consultant)
106. R. H. Muller (consultant)
107. N. H. Furman (consultant)
108-109. ORNL - Y-12 Technical Library, Document Reference Section
110-129. Laboratory Records Department
130. Laboratory Records, ORNL R.C.
131-132. Central Research Library

EXTERNAL DISTRIBUTION

133. R. F. Bacher, California Institute of Technology
134. Division of Research and Development, AEC, ORO
135-522. Given distribution as shown in TID-4500 under Instrumentation category

DISTRIBUTION PAGE TO BE REMOVED IF REPORT IS GIVEN PUBLIC DISTRIBUTION

ABSTRACT

Two significant modifications have been made to the MSA alkali metal sampler: 1) the substitution of vacuum-tight, modified Wilson seal for the packing gland, and 2) the replacement of the gate valve with a vacuum-tight, Teflon-packed, Jamesbury valve. A complete description of the modified sampler and a stepwise procedure for its application to the sampling of dynamic or static systems of alkali metals are given.

THE SAMPLING OF ALKALI METAL SYSTEMS WITH THE MODIFIED MSA SAMPLER

G. Goldberg, A. S. Meyer, Jr., J. C. White

This report includes a description of a modified sampler for alkali metals similar to that developed by the Mine Safety Appliance Company,[3] and a detailed procedure of its operation. Since the sampling apparatus can be connected to either dynamic or static systems, it is possible to carry out direct sampling of alkali metals at operating temperatures. A sampler similar to the MSA type (see Figure 5, B) has been designed by E. E. Hoffman.[1]

Two significant modifications were made to the original MSA sampler, which is shown in Figure 5, A; (1) the substitution of a modified Wilson seal for the packing gland seal to ensure the complete removal of oxygen from the sampling apparatus; (2) the replacement of the Teflon-packed gate valve, which is attached to the sample port, with a Jamesbury valve.[2]

The use of the modified Wilson seal is particularly advantageous in that with this seal an oxygen-free system is achieved and maintained with a minimum of operating time. Since a packing gland seal is not vacuum-tight, the atmosphere in the MSA sampler had to be freed from oxygen by passing argon into the sampler through the 3-way stopcock, and then allowing the argon to flow out through the bucket support tubing. After a thorough purging, the support tubing is closed at the top with a pinch clamp on Tygon tubing. To complete the purging of the apparatus, the 15-mm stopcock and the sampling port valve are opened; then the 3-way stopcock is positioned to allow the argon which passes up from the loop to be sampled to flow out through the stopcock. NaK vapor, which also passes up into the apparatus, helps to

assure the complete removal of any oxygen that is still present. The bucket is lowered into the alkali metal; then the sample is taken.

Since it is necessary to purge the apparatus through the sampling port, the original sampler can be used only when a special chamber is incorporated in the alkali metal system. This chamber must be a part of the flowing system to assure a representative sampling. It must also be connected to a source of inert gas. In contrast, the modified sampler can be attached to any point at which a Jamesbury valve can be connected to provide access to the alkali metal.

The Wilson seal assembly, shown in Figure 1, is normally composed of 1) the body, 2) the clamp nut, 3) one pressure ring, and 4) three gaskets. The body is usually welded to the apparatus to which it is connected. The glass-to-metal seal modification was added to facilitate the connection of the Wilson seal to the glass sampler. This modification consists of 5) a threaded compression cap, 6) one pressure ring, and 7) two gaskets.

The Jamesbury valve is a reliable, compact, vacuum-tight, ball-type valve. The valve is completely opened, or closed, by a one-quarter turn of the handle. The valve is supplied complete with interchangeable packings made from Teflon, silicone rubber, or buna rubber. A Teflon-packed valve is used in the modified sampler. Although a gate valve is satisfactory when it is connected to pressurized systems, it is not nearly as reliable as the Jamesbury valve when used in evacuated systems.

Description of Apparatus

The apparatus is shown schematically in Figures 1 through 4. Figure 1 depicts the apparatus assembled for connection to the sampling port. In Figure 2 is shown the bucket receiver assembly to which the sampler is connected when a full sample bucket is to be sealed off in a glass receiver. The Pyrex glass receiver is also shown. The component parts of the modified Wilson seal are shown in Figure 3. A composite drawing of the Jamesbury valve and adapter for connecting the sampler to the sampling port is given in Figure 4.

The adapter is made by joining a standard tapered joint to a glass pipe joint. Standard glass pipe flanges and a Teflon gasket are used to connect the glass pipe to the metal valve. The valve must be vacuum-tight with an opening that is sufficiently large to pass the sample bucket. The valve can be kept cool, if necessary, by the addition of an air-cooling coil wrapped around the body of the valve.

High vacuum stopcock grease should be used to lubricate the stopcocks and the steel tubing to which the bucket is connected. The vacuum system should be capable of maintaining a pressure of less than 5 microns.

Procedure

To obtain a sample with the modified apparatus, a nickel bucket is placed in the sampler which is then connected to the sampling port. The sampler and the sampling port are freed of air by alternately evacuating and then purging the apparatus with dry, oxygen-free helium. The nickel sample bucket is lowered into the alkali metal through an opened valve which is connected to

the sample port; then the filled sample bucket is withdrawn from the system under an atmosphere of helium. It is then transferred to a Pyrex receiver where the bucket is sealed off under vacuum. There is apparently negligible contamination of the alkali metal during sampling since concentrations of oxygen as low as 20 ppm have been determined in samples of sodium that were taken by this sampler.

A. Assembly of Sampling Apparatus.

1. Clean and assemble the components of the modified Wilson seal as pictured in Figure 1.

2. Lubricate the stainless steel tubing with high vacuum grease; then insert the tubing into, and through, the Wilson seal.

3. Position the seal on the glass tubing connected to the stopcock; then tighten the compression cap.

4. Open the 25-mm stopcock and extend the tubing through the stopcock and beyond the tapered glass joint.

5. Pass one end of stainless steel piano wire through the tubing, around the handle of a sample bucket, and then back through the tubing.

6. Pull both ends of the wire so that the bucket handle is brought up against the steel tubing.

7. Cut the wire to leave approximately 4 inches of each end extending from the upper end of the tubing.

8. Slip a well-greased, 3-inch piece of rubber tubing over the wire and allow one inch of the rubber tubing to overlap the end of the stainless steel tubing.

9. Tighten a pinch clamp on the section of rubber tubing that extends over the wire so as to form a vacuum-tight seal at the top of the steel tubing.

10. Retract the steel tubing until the bucket is positioned above the stopcock.

11. Connect the sampler to the sampling port that is attached to the loop valve.

B. Transfer of Sample.

1. Adjust the pressure of the purified helium supply to 1 to 2 psi.

2. Start the vacuum pump.

3. With the 25-mm stopcock open, evacuate the sampler to less than 5 microns pressure; then fill the sampler with helium.

4. Repeat Step B-3 at least three times.

5. Open the sampling port valve slowly.

6. Lower the steel tubing until the bucket is below the surface of the alkali metal to be sampled.

7. Allow the bucket to fill; then raise the bucket slowly above the sampling port valve.

8. Close the valve.

9. Allow the bucket and its contents to cool for 3 to 5 minutes.

10. Raise the bucket above the 25-mm stopcock opening carefully.

11. Close the 25-mm stopcock.

12. Remove the sampler from the sampling port; then clamp the sampler to a rigid vertical support.

13. Assemble the two sections of the bucket receiver assembly; then connect the assembly to the sampler.

14. Adjust the pressure of the helium supply connected to the receiver assembly to 1 to 2 psi.

15. With the 25-mm stopcock closed, evacuate the receiver assembly to approximately 5 microns pressure; then fill the assembly with helium.

16. Repeat Step B-15 at least three times.

17. Open the 25-mm stopcock slowly.

18. Lower the sampling bucket to the bottom of the Pyrex bucket receiver.

19. Grasp one end of the steel wire that extends from the rubber tubing at the top of the steel tubing and pull the wire out from the sampler completely.

20. Raise the steel tubing above the 25-mm stopcock opening.

21. Close the stopcock.

22. Evacuate the bucket receiver assembly.

23. Seal off the Pyrex receiver one inch below the tapered joint by heating carefully with a glass blower's torch. (Heat this region of the receiver uniformly. The vacuum will cause the glass to collapse when the softening point of the Pyrex is reached.)

24. Allow helium to flow into the receiver assembly before any attempt is made to remove the tapered joint of the receiver tube from the assembly.

References

1. E. E. Hoffman, Oak Ridge National Laboratory, Private Communication, March 10, 1956.

2. Jamesbury Valve, Type D-22, carbon steel and stainless steel, Jamesbury Company, 62 Millbrook Street, Worchester, Massachusetts.

3. R. E. Lee, S. L. Walters, "Technique of Sampling and Analyzing Hot Flowing NaK Alloys," NP-1527, May 1, 1950, Mine Safety Appliance Company.

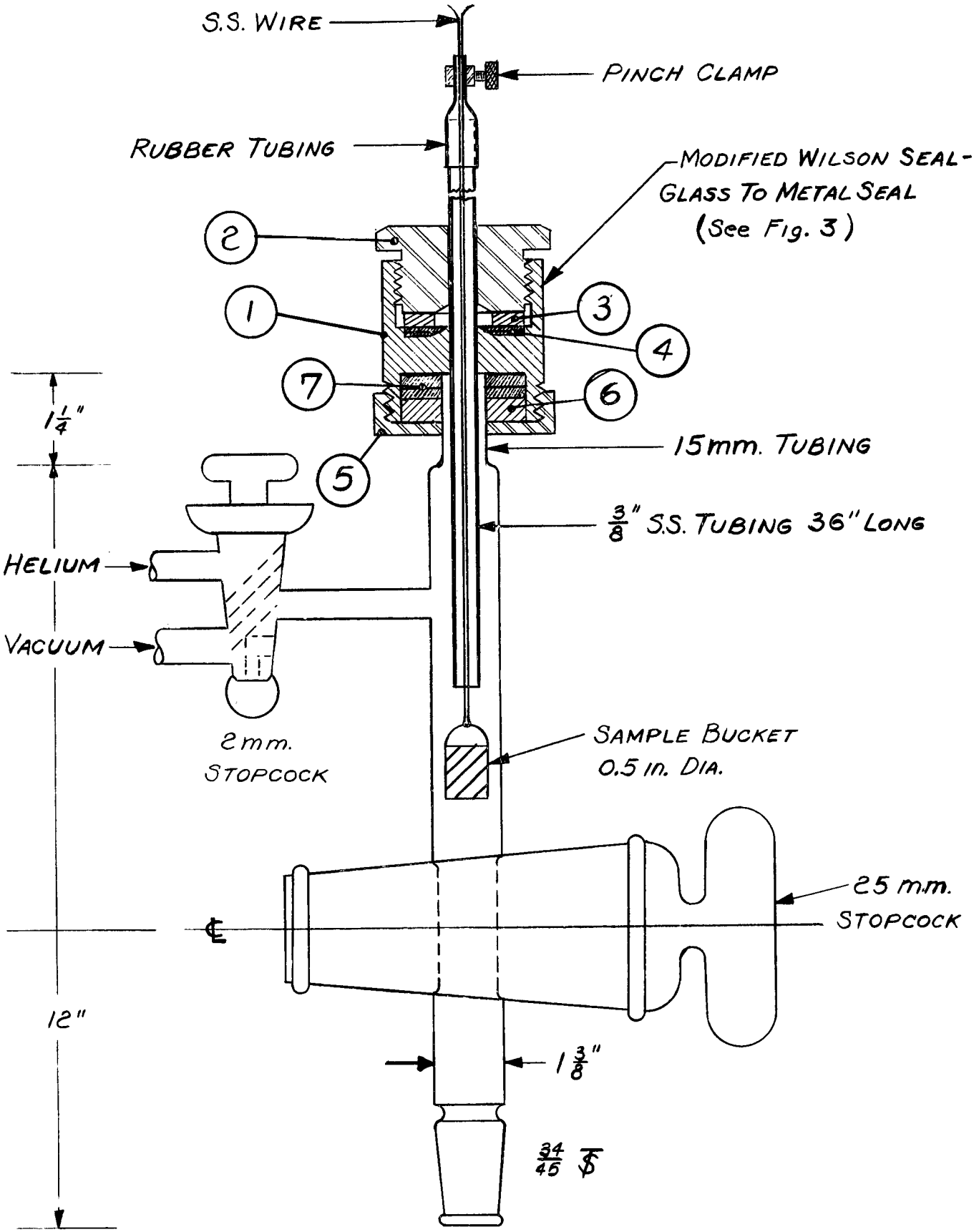

Figure 1. Apparatus for Sampling Molten Alkali Metals

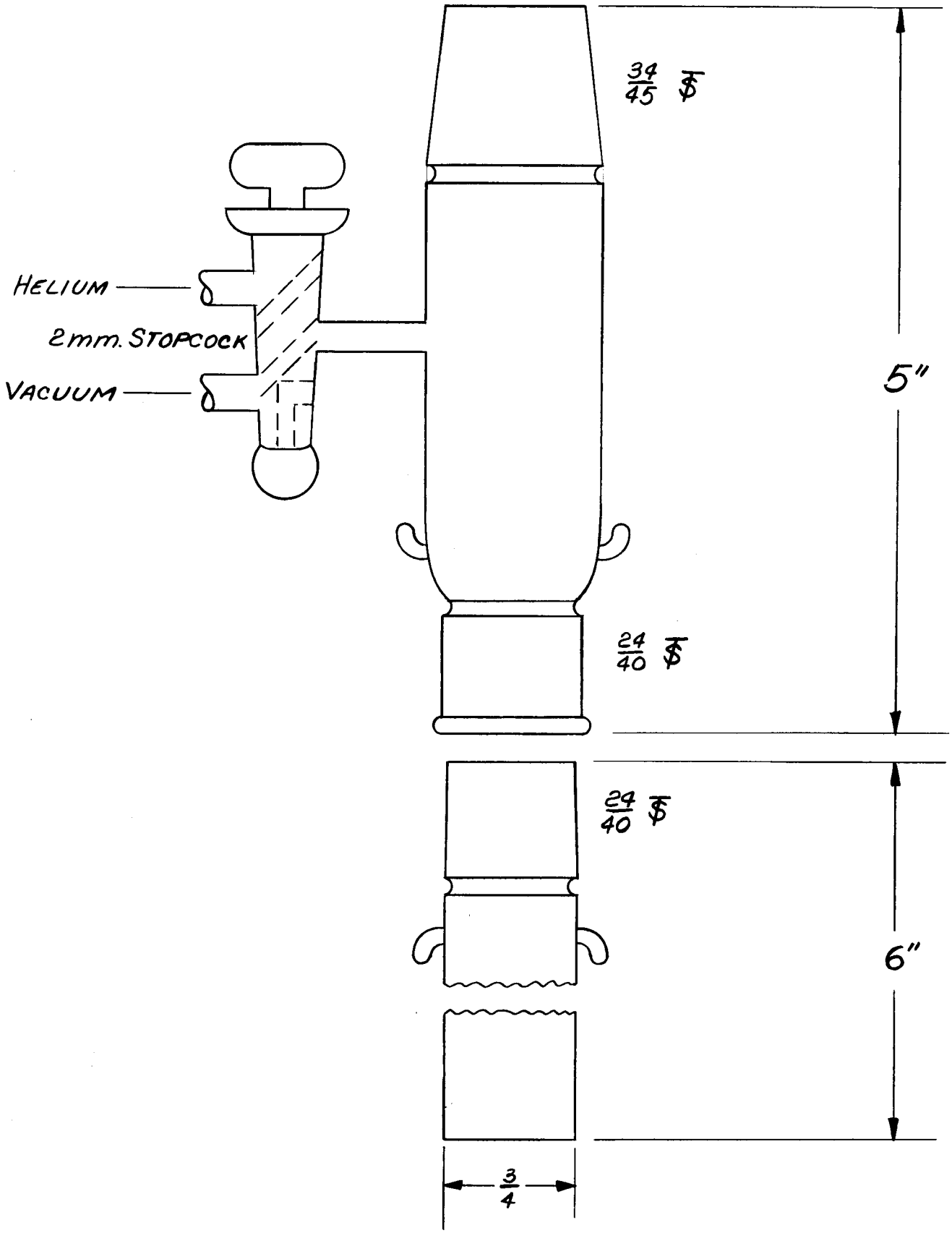

Figure 2. Bucket Receiver Assembly for Alkali Metal Sampler

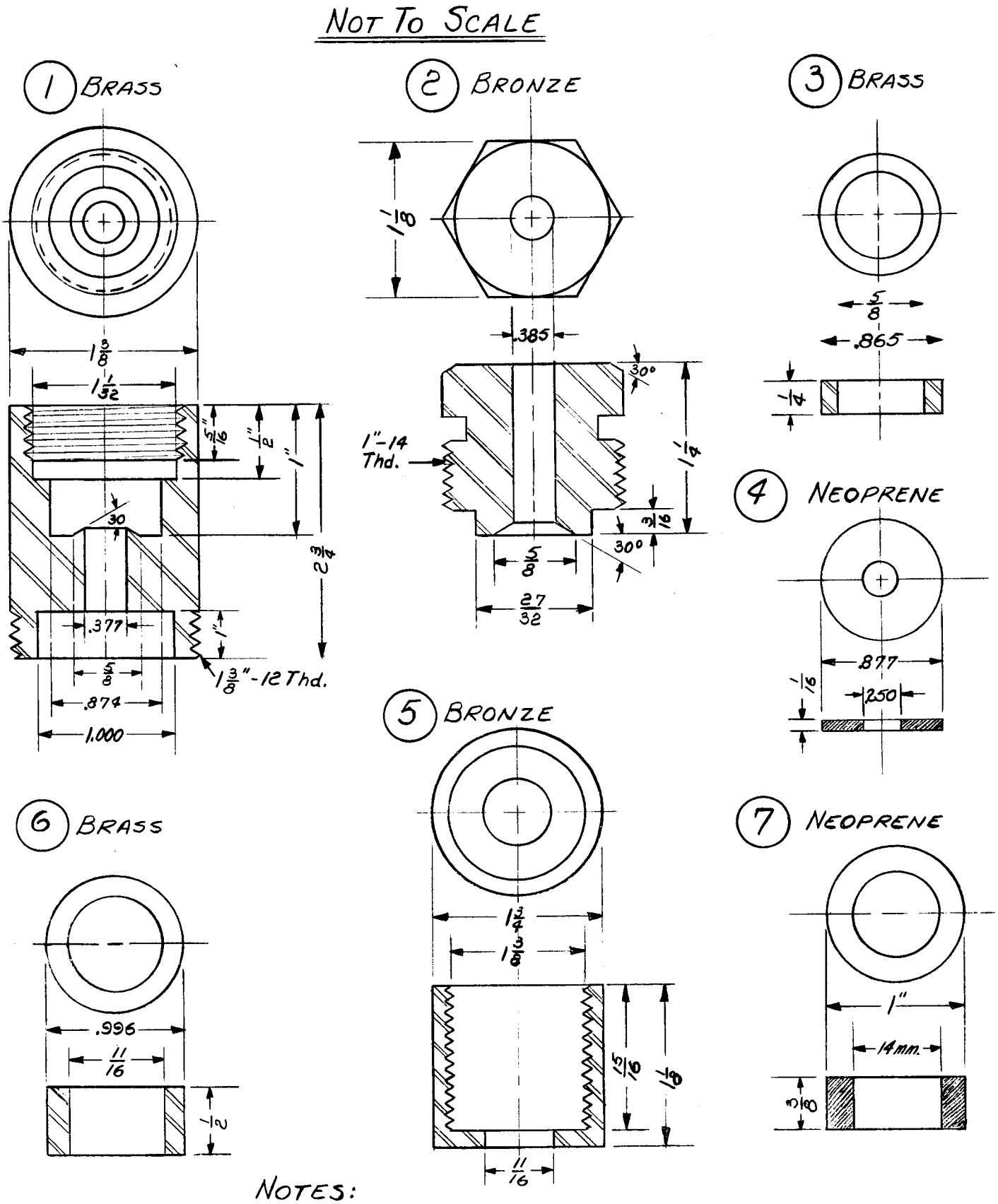

NOTES:

1. ALL DECIMAL DIMENSIONS TO BE ± 0.001 TOL.
2. EDGES MUST BE SHARP; ALL SURFACES POLISHED

Figure 3. Modified Wilson Seal - Glass to Metal Seal Assembly

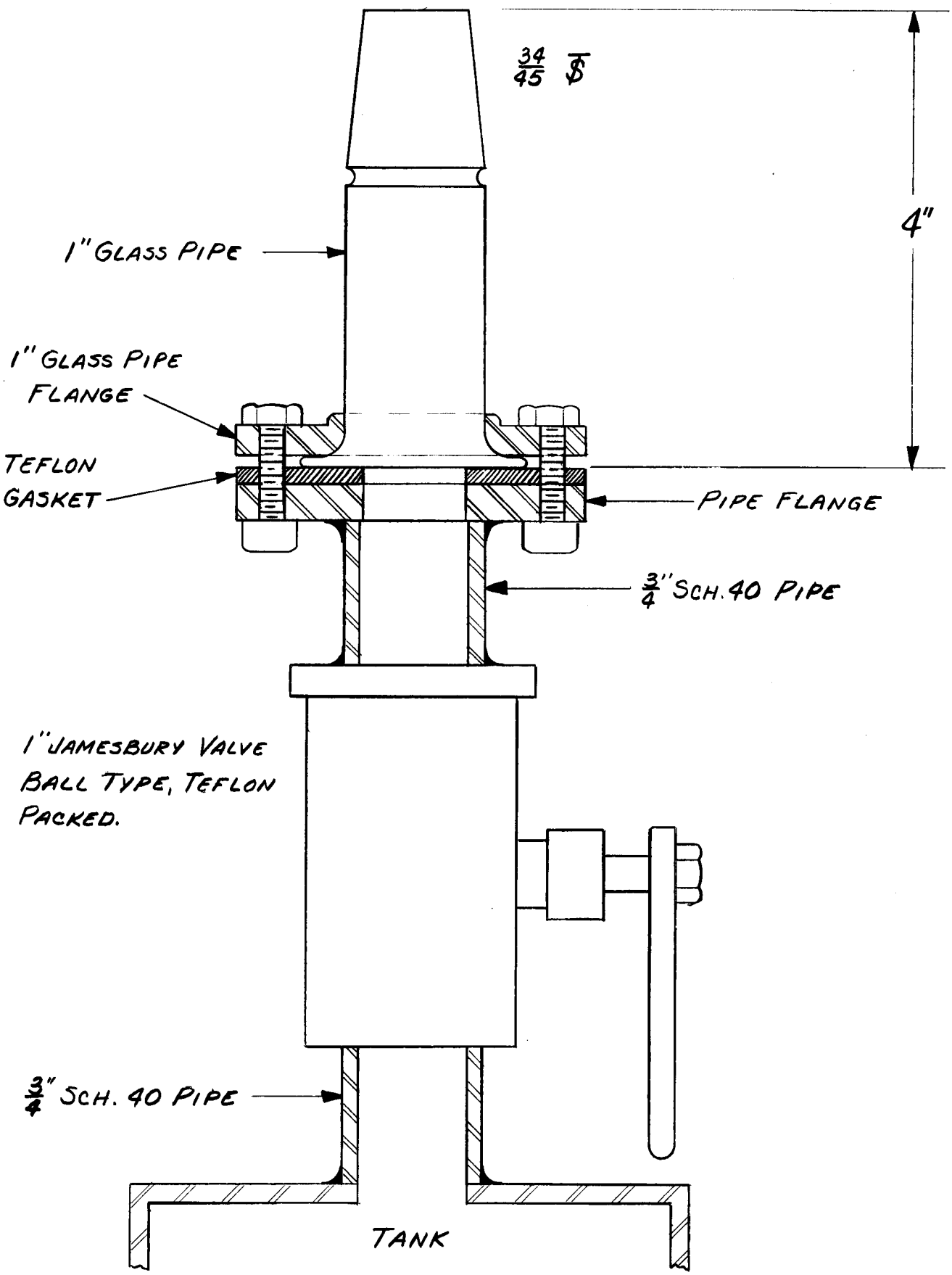

Figure 4. Loop Valve and Adapter for Alkali Metal Sampling Apparatus

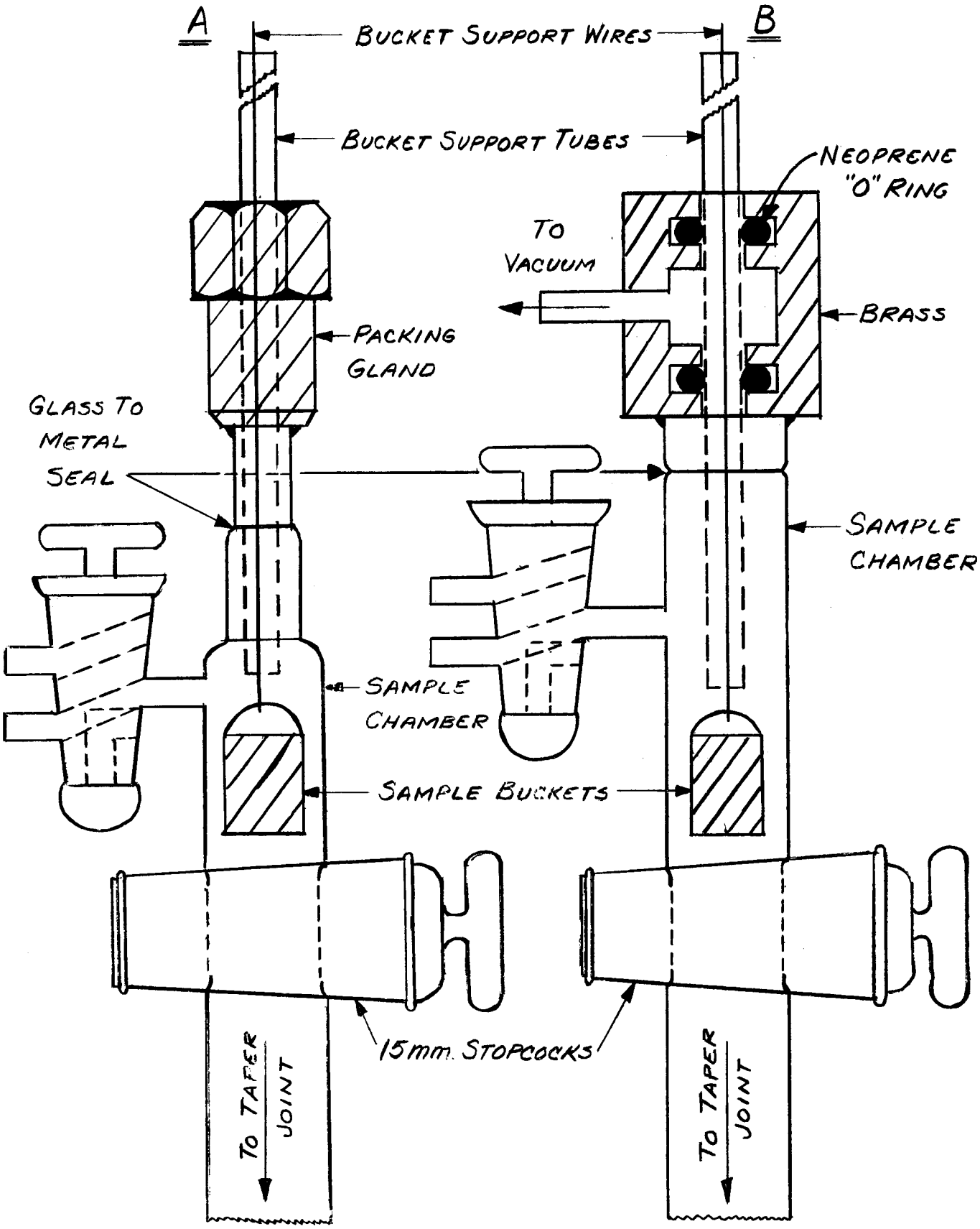

Figure 5. Earlier Models of Alkali Metal Samplers