jbm

X-816

[redacted]

ORNL
MASTER COPY

OAK RIDGE NATIONAL LABORATORY
Operated By
UNION CARBIDE NUCLEAR COMPANY

UCC

POST OFFICE BOX P
OAK RIDGE, TENNESSEE

ORNL
CENTRAL FILES NUMBER
56-2-87

COPY NO. 98

Per Letter Instructions Of
Lid-1147
E. L. Bonney
For: N. T. Bray, Supervisor
Laboratory Records Dept.
ORNL

DECLASSIFIED

DATE: February 16, 1956

SUBJECT: Predicted Behavior of Fission Products in the HRT

TO: Distribution

FROM: D. E. Ferguson, R. E. Leuze, R. A. McNees

1. HRP Director's Office Rm. 259, Bldg. 9204-1
2. G. M. Adamson
3. R. E. Aven
4. S. [redacted]
5. D. [redacted]
6. E. [redacted]
7. C. [redacted]wski
8. G. [redacted]
9. J. [redacted]
10. R. [redacted]
11. F. [redacted]
12. A. [redacted]
13. G. [redacted]
14. C. [redacted]
15. R. [redacted]
16. H. [redacted]
17. W. [redacted]
18. G. [redacted]
19. E. [redacted]
20. S. [redacted]
21. F. L. Culler
22. J. S. Culver
23. W. K. Eister
24. E. P. Epler
25. H. L. Falkenberry
26. D. E. Ferguson
27. W. J. Fretague
28. J. H. [redacted]
29. W. R. [redacted]
30. H. E. [redacted]
31. C. B. [redacted]
32. J. C. [redacted]
33. J. J. [redacted]
34. J. Hal[redacted]
35. D. C. [redacted]
36. P. N. [redacted]
37. J. W. [redacted]
38. C. J. [redacted]
39. H. K. [redacted]
40. G. H. [redacted]
41. J. R. [redacted]
42. W. H. [redacted]
43. S. K. [redacted]
44. P. R. [redacted]
45. M. T. Kelley
46. A. S. Kitzes
47. R. B. Korsmeyer
48. W. Koskela
49. K. A. Kraus
50. J. A. Lane
51. R. E. Leuze
52. W. H. Lewis
53. S. C. Lind
54. [redacted]ndauer
55. [redacted]ndin
56. [redacted]on
57. [redacted]rshall
58. [redacted]therne
59. [redacted]Bride
60. [redacted]Duffie
61. [redacted]Nees
62. [redacted]Wherter
63. [redacted]
64. [redacted]iller
65. [redacted]estor
66-68. [redacted]rmi
69. [redacted]arsly
70. [redacted]icklesimer
71. [redacted]harles
72. [redacted]osenthal
73. [redacted]oss
74. H. C. Savage
75. C. H. Secoy
76. E. M. Shank
77. E. D. Shipley
78. A. H. Snell
79. I. Spiewak
80. [redacted]ghton
81. [redacted]ano
82. [redacted]rtout
83. [redacted]or
84. [redacted]mas
85. [redacted]mas
86. [redacted]mason
87. [redacted]
88. [redacted]b
89-92. [redacted]er
93. [redacted]kle
94. [redacted]berg
95. [redacted]ton
96. [redacted]on
97. [redacted]ke
98. [redacted]ds-RC
99-100. [redacted]ds
101. CR Library
102. REED Library
103. ORNL Doc. Ref. Library - Y-12
104. H. F. Reichard, Vitro Corp.

[redacted]

[redacted]

[redacted]

1.0 INTRODUCTION

This report presents the results of a study made to predict the behavior of fission products in the HRT. Specifically, the amount of rare gases escaping to the atmosphere and accumulated in the carbon beds, the rate of accumulation of the daughters of Xe and Kr in the off-gas system, and the concentration of all non-gaseous fission products in the reactor fuel solution including iodine were estimated. In addition, the predicted accumulation of insoluble fission and corrosion products in various components of the fuel system are discussed. In most cases insufficient data are available to make firm estimates, and the results reported here should be considered very tentative until such data are available.

For purpose of obtaining the results reported here, the HRT was assumed to have been operating at a 10 MW level for an extended period of time, with the chemical plant operating two days per week and 2.75 gallons of fuel solution at reactor conditions let-down per week in the chemical plant.

2.0 SUMMARY

About 30 weight percent of the fission products will be removed from the HRT as rare gases by stripping with O_2, D_2 and steam. The decay of the radioactive isotopes of Xe and Kr in the off-gas system will leave 17 weight percent of the total fission products in the equipment through which the gases pass and the charcoal bed. Under design conditions of operation, the charcoal beds will retain Xe for a minimum of 180 days and Kr for 30 days. After this delay period only 5 curies per day of Kr^{85} and the stable isotopes of Xe and Kr escape to the

atmosphere. Iodine, we now believe, will exist primarily in the elemental form in the reactor and will be removed in the off-gas. If this occurs, iodine will reach a concentration of 1.3 ppm in the reactor fuel, 13 ppm in the condensate and .05 ppm in the dump tank after extended periods of 10 MW operation.

Another 56 weight percent of the fission products have sufficiently low solubilities in the reactor fuel solution that their removal from the reactor will be primarily as solids collected in the chemical plant. This is particularly true of those fission products such as the rare earths (the rare earths make up 28 weight percent of the fission products and have a solubility of 127 MWD in the HRT) which have a low solubility at elevated temperature, but redissolve on cooling the fuel solution. It is predicted that a significant fraction of those insolubles, primarily corrosion product iron, chromium and zirconium oxides, which do not redissolve at lower temperature, will collect in the reactor dump tanks by sedimentation. There is insufficient data to make an intelligent estimate of the fraction that will collect in the dump tanks, but it would be 88% if all the solids which enter the dump tank settle out. Based on our present knowledge there are no other places in the system that will continually accumulate significant quantities of insoluble fission products.

Less than 2% of the total fission products which show up in the fuel solution (85% of the Cs and 98% of the Rb will show up in the off-gas system) are known to have sufficient solubility in the fuel solution so that no precipitation will occur. Te, Tc, and Mo, contributing 12 weight percent of the fission products, are assumed to be soluble in the HRT; however, present data are not conclusive.

3.0 GASEOUS FISSION PRODUCTS

3.1 HRT Off-Gas System

The HRT will be operated with an internal catalyst concentration sufficient to recombine all but about 0.032 lb moles/min of D_2 and O_2. This amount of gas, which corresponds to the decomposition rate at 1 MW power, will be separated out in the gas separator and let down to the entrainment separator. The boil-up from the dump tanks sweeps this gas on to the low pressure catalytic recombiner where the D_2 and O_2 are combined. The steam is then condensed and any non-condensable gases are bled off to the charcoal beds through a cold trap.

The off-gas system is described schematically in Fig. 1. The gas from the reactor will reach the recombiner condenser in <10 seconds. Leaving the condenser this gas will pass through 6 ft of 1-in. pipe, the cold trap, 220 ft of 1/2-in. pipe, 160 ft of 3-in. pipe, and finally into the charcoal beds. The charcoal beds are made up of 40 ft of 1/2-in. pipe, 40 ft of 2-in. pipe, and 60 ft of 6-in. pipe packed with charcoal. There are four such adsorbers, three of which can be operated in parallel and one for the chemical plant. Gases which escape from the charcoal bed are diluted with air and are blown up the stack.

The following sections describe the behavior of fission products in the off-gas system.

3.2 Stripping of Xe and Kr from the Reactor

Van Winkle[2] and Aven[1] have derived equations for the rate of stripping Xe and Kr from the HRT. Using Aven's equation the rate at which all Xe and Kr isotopes will reach the recombiner condenser have been calculated (see Appendix A for details of method and results) along with the quantity of each isotope present in the soup. The

UNCLASSIFIED
ORNL-LR-Dwg #11884

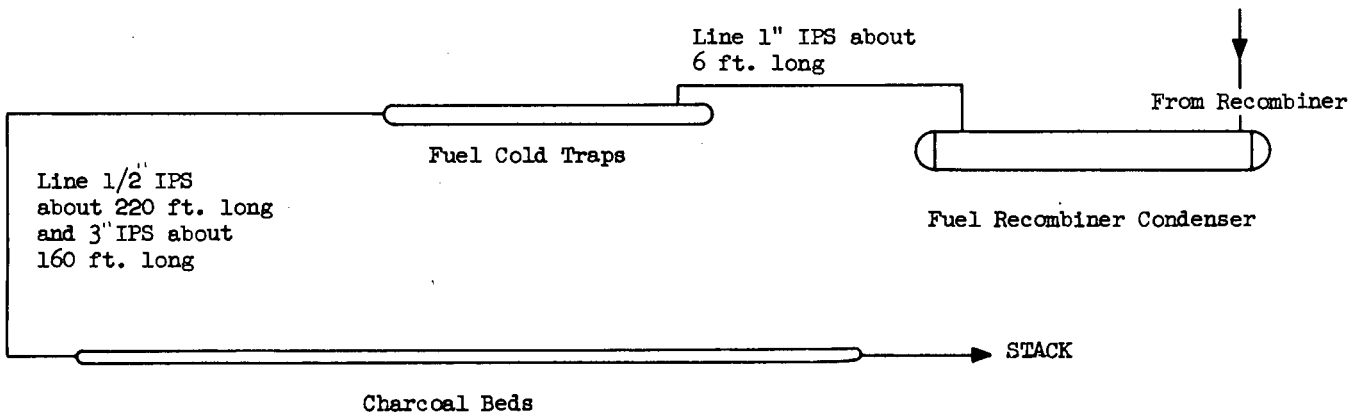

Fig. 1 Schematic Diagram of the HRT Off-Gas System

calculations are based on an extended period of operation at 10 MW and a radiolytic gas let-down rate of 0.032 lb moles/min (220 cc/sec of wet gas). This amount of decomposition gases will strip the Xe^{135} at a rate which will give a Xe^{135} poison of about 0.0024. However, the concentration of any Xe isotope in the reactor which has an iodine parent with a half-life longer than about 2 hr is reduced significantly by the stripping of iodine. In the case of Xe^{135} the reduction due to removal of I^{135} (6.7 hr) amounts to about 18% (see next section) and the predicted Xe^{135} poison level is .0020.

About 30 weight percent of the fission products will be removed as I_2, Xe and Kr by this stripping process. Table 1 gives the production rate of Xe and Kr, the rate of stripping from the reactor fuel solution, the rate at which the gases enter the charcoal beds and the expected rate of escape from the charcoal beds under two sets of conditions. The bulk of the radioactive isotopes decay in the recombiner condenser dead space and the lines to the charcoal bed. The charcoal beds represent a holdup of about 30 days for Kr and about 180 days for Xe when operated under design conditions (a total of 500 cc/min of O_2 through two beds in parallel), and at equilibrium only about 5 curies/day of Kr^{85} and the stable isotopes of Xe and Kr escape the beds. If the full gas flow, 500 ml/min of O_2, were put through one bed for an extended period of time with the reactor at 10 MW, Xe^{133} (5.27 d half-life) and Xe^{131m_2} (12 d half-life) probably would break through to the extent of 1.5 curies/day. Thus, one would conclude that the carbon beds have an adequate safety factor provided that for continuous operation at 10 MW the flow through any one bed be limited to the design value of 250 cc/min of gas.

3.3 Build-Up of Fission Products in Off-Gas System

The estimated rates of build-up of stable and long-lived daughters

Table 1

Distribution of Kr and Xe in HRT Off-Gas System

Basis: reactor at 10 MW, 500 cc/min of O_2 through off-gas system, equilibrium conditions assumed

Isotope	Yield	$T_{1/2}$	Atoms in Soup x 10^{-17}	Atoms/sec Entering Off-Gas System x 10^{-15}	Atoms/sec Entering Carbon Beds x 10^{-15}	Atoms/sec[a] Leaving Carbon Beds x 10^{-15}	Curies/day[a] In Stack Gas	Atoms/sec[b] Leaving Carbon Beds x 10^{-15}	Curies/day[b] In Stack Gas
Kr									
83 m	.0048	114 m	4.5	1.57	0.041	---	---	---	---
83	---	Stable	---	.045	1.57	1.57	---	1.61	---
84	.011	Stable	10.6	3.72	3.72	3.72	---	3.72	---
85 m	.015	4.36 h	14.3	5.01	1.02	---	---	---	---
85	.003	10.27 y	2.9	1.03	1.01	1.01	4.95	1.01	5.00
86	.021	Stable	20.3	7.10	7.10	7.10	---	7.10	---
87	.027	78 m	25.0	8.76	.042	---	---	---	---
88	.037	2.77 h	35.0	12.3	1.01	---	---	---	---
89	.046	3.18 m	21.8	7.64	---	---	---	---	---
90	.052	33 s	7.2	2.51	---	---	---	---	---
Total					15.5	13.4	4.95	13.4	5.00
Xe									
131 m_2	.0003	12 d	.263	0.09	0.09	4×10^{-6}	.005	5.5×10^{-4}	0.86
131	.029	Stable	26.1	9.1	9.2	9.3	---	9.3	---
132	.044	Stable	41.9	14.7	14.7	14.7	---	14.7	---
133 m	.0016	2.3 d	1.50	0.53	0.46	---	---	---	---
133	.065	5.27 d	61.0	21.4	20.2	1.8×10^{-9}	---	1.9×10^{-4}	0.67
134	.076	Stable	73.3	25.7	25.7	25.7	---	25.7	---
135	.062	9.13 h	46.6[c]	20.0	9.3	---	---	---	---
136	.032	Stable	30.9	10.8	10.8	10.8	---	10.8	---
137	.059	3.9 m	30.8	10.5	---	---	---	---	---
138	.055	17 m	44.5	15.5	3.7×10^{-10}	---	---	---	---
139	.047	41 s	7.8	2.3	---	---	---	---	---
140	.037	16 s	2.67	0.60	---	---	---	---	---
Total					90.45	60.5	.005	60.5	1.5

a. O_2 flow of 500 cc/min through two charcoal beds in parallel.
b. O_2 flow of 500 cc/min through one charcoal bed.
c. Corrected for the I^{135} removed from the reactor in the off-gas. Values for other isotopes of Xe in this table not corrected for this factor.

of Xe and Kr in the off-gas system are given in Table 2. This estimate is based on a 10 MW power level and 500 cc/min flow of oxygen through the core off-gas system. These fission products represent about 17 weight percent of the total fission products produced in the reactor.

3.4 Behavior of Iodine in the Reactor System

The distribution coefficient for I_2 between the gas and liquid phase in the reactor has been determined to be about 0.5 atoms per ml of gas/atoms per ml of soup. This will lead to a significant stripping of I_2 by the radiolytic gas. However, the distribution coefficient is much less for pure water and gas, of the order of .06* under the conditions that exist in the recombiner condenser. Under the flow conditions that exist in the HRT, 97% of the iodine that is stripped from the reactor fuel in the gas separation will be returned to the reactor in the condensate that is pumped to the back of the main circulating pump and the pressurizer. Based on present knowledge it was calculated (see Appendix B) that the equilibrium iodine concentration in the main circulating loop will be 1.3 ppm, (a total of 460 mg) in the condensate from the recombiner condenser, 13 ppm (a total of 500 mg) and only 0.05 ppm (a total of 5 mg) in the dump tank. The predicted distribution of iodine in the reactor is given in Table 3.

The above iodine concentrations are based on three iodine distribution coefficients: 0.5 at 300°C in the reactor[6], 0.12 at 100°C* in the dump tank and 0.06 at 65°C* at the exit from the recombiner condenser. By determining the distribution of iodine under actual reactor operating conditions it should be possible to calculate values for these distribution coefficients which can be reliably used in designing iodine removal equipment for the TBR.

---

* Calculated from data obtained from references 7 and 8.

Table 2

Build-up of Fission Products in Off-Gas System

Fission Product	Build-up Rate, mg/MWD	
	In Line	In Charcoal Bed
Rb	16.0	1.4
Sr	33.0	1.3
Cs	43.7	57.3
Ba	30.4	---
La	4.0	---
Ce	1.2	---
Total	128.3	60.0

Table 3

Equilibrium Amount of Iodine in HRT

Reactor power = 10 MW (see Appendix B)

Isotope	Yield	$T_{1/2}$	Atoms in Main Loop x 10^{-20}	Atoms in Condensate x 10^{-20}	Atoms in Dump Tank x 10^{-18}
127	.0022	Stable	0.54	0.73	0.78
129	.010	1.72×10^7 y	2.47	2.71	2.90
131	.029	8.05 d	6.70	7.36	7.87
132	.044	2.4 h	0.82	0.90	0.96
133	.065	20.8 h	6.80	7.46	8.00
134	.076	52.2 m	0.89	0.98	1.05
135	.059	6.68 h	2.67	2.94	3.16
Total atoms			20.89	22.08	24.72
Total mg			460	500	5

If the above distribution coefficients are qualitatively correct, removal of iodine from the recombiner condenser condensate appears to be an attractive method of lowering the iodine concentration in the reactor. For example in the HRT, if all the iodine is removed from this condensate, the iodine concentration in the reactor is lowered to 0.12 ppm, a total of 42 mg, (see Table 4 for isotopic breakdowns) and the Xe^{135} poison level to .00026.

Table 4

Effect of Removing Iodine from Condensate

Reactor power = 10 MW (see Appendix B)

Isotope	Atoms in Main Loop No Iodine Removal $\times 10^{20}$	Atoms in Main Loop With Iodine Removal $\times 10^{19}$
I		
127	0.54	0.19
129	2.47	0.76
131	6.70	2.20
132	0.82	2.82
133	6.80	4.83
134	0.89	3.86
135	2.67	4.21
Total atoms	20.89	18.87
Total mg	460	42
Xe		
135	4.66×10^{18}	6.0×10^{17}

3.5 Non-Gaseous Fission Products

For convenience the major non-gaseous fission products were divided

into three groups; those known to have a limited solubility in the HRT fuel solution, those believed to have a solubility large compared to their equilibrium concentration, and those with uncertain behavior. The fission products classified as insoluble account for about 56 weight percent of the total fission products and consist of the rare earths, alkaline earths, Zr and noble metals. The rare earths are estimated to have a solubility corresponding to 127 MWD in the HRT, see Table 5, and the other chemical groups considerably less.

The known soluble non-gaseous fission products Cs, Rb, and Se which show up in the reactor fuel (85% of the Cs and 98% of the Rb are produced in the off-gas system) account for less than 2 weight percent of the total. The predicted equilibrium concentration of these elements in the HRT fuel are given in Table 6.

The behavior of only three of the major fission products constituting about 12 weight percent of the total fission products is sufficiently in doubt at this time to prevent a clear cut prediction of their behavior. Tellurium has not yet been studied. Technetium in the +7 state will be soluble and in the +4 state will have a very limited solubility but the valence distribution under reactor conditions cannot be predicted at present. The behavior of molybdenum +6 in uranyl sulfate solutions at 285°C seems to be complex with evidence at present indicating some limiting solubility complicated by what is probably a phase change in the solid and possibly an equilibrium which is not rapidly reversible. Table 7 gives the production rate and predicted equilibrium concentration of these three elements based on the assumption that they are soluble in the fuel solution.

Table 5

Insoluble Major Fission Products

Chemical Group or Element	Rate of Production mg/kg D_2O/MWD	Solubility mg/kg D_2O	Solubility MWD
Rare earths	0.67	85	127
Alkaline earths	0.15	10	67
Zirconium	0.27	<1	<4
Ru, Rh, Pd	0.16	<5	<31

Table 6

Soluble Major Fission Products

Basis: 7.1 kg of D_2O (2.75 gal at 300°C) let-down in chemical plant per week

Chemical Element	Rate of Production mg/kg D_2O/MWD	Equilibrium Concentration mg/kg D_2O/MW
Cs	0.036	18
Rb	0.0006	0.30
Se	0.002	1.0

Table 7

Major Fission Products of Uncertain Behavior

Element	Rate of Production mg/kg D_2O/MWD	Equilibrium Concentration[a] mg/kg D_2O/MW
Te	0.041	20
Mo	0.18	90
Tc	0.06	30

a. The equilibrium concentration if these elements are soluble.

3.6 Accumulation of Solids in HRT Fuel System

There are at least two ways in which solids can accumulate in the HRT Fuel System equipment. Fission and corrosion products that exceed solubility are preferentially deposited on hot walls, and solids slurried in the soup may accumulate in crevices and stagnant portions of the fuel system.

Based on loop results, we would predict that a significant fraction of the solids that precipitate in the system will accumulate throughout the system, in crevices, in low velocity areas and in a general film on the walls of the equipment. Our best guess is that this will reach an equilibrium condition and that practically all of the solids formed in the reactor thereafter will show up in either the chemical plant or dump tanks.

Figure 2 presents a schematic flow of the fuel system in which solids will be present.

A. Hot Wall Deposition

1. Reactor Core Vessel

Only certain parts of the reactor core vessel will be at a significantly higher temperature than the circulating soup. There are no data available which will permit a careful evaluation of the build-up of solids on the core tank wall. However, based on the observation that there is no accumulation of corrosion products on Zircaloy-2 corrosion specimens in the high flux region of in-pile loops it is predicted that an insignificant build-up will occur on the HRT core tank.

2. Pressurizer

There should be no deposition of fission products on the heating surfaces of the pressurizer during normal operation, since only water is present.

ORNL-LR-Dwg #11885
UNCLASSIFIED

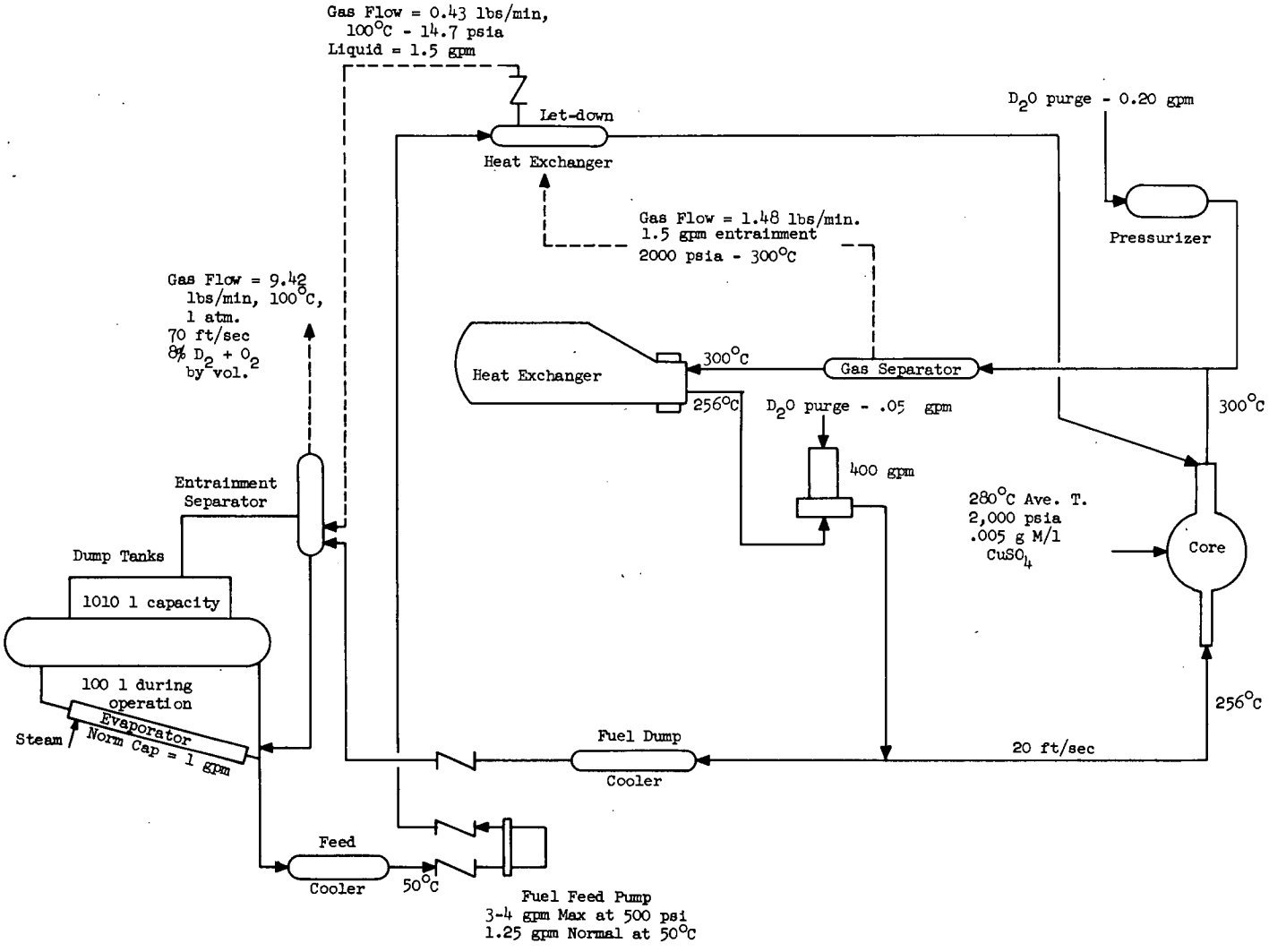

Fig. 2 Schematic Diagram of HRT Core System

3. Let-down Heat Exchanger

There is a possibility of fission product deposition from the return fuel feed stream as it is heated from 50°C to ~ 200°C. However, this does not seem likely with the chemical plant removing solids from the reactor, since the rare earth solubility at 200°C is greater than 5 times that at 280°C.

B. Loose Solids Accumulation

1. Dump Tanks

The dump tanks are the most likely place for solids to accumulate to a significant degree in the HRT. Based on the experience with ThO_2 slurries settling out in a mock-up of the HRT dump tanks, some fraction of the solids that do not redissolve at lower temperature will build up in the dump tanks by sedimentation. This accumulation will be restricted to materials such as iron, chromium and zirconium oxide and possibly barium and strontium sulfates. The rare earths, with the possible exception of part of the Ce will redissolve in the dump tanks and should be removed from the reactor primarily in the chemical plant.

The flow of fuel solution through the dump tanks is 7 times as great as through the chemical plant. If the dump tanks are as efficient as the hydroclone in removing solids, 88% of those materials which do not redissolve would accumulate there and only 12% show up in the hydroclone underflow. If possible, the tendency of solids to collect in the dump tanks with the chemical plant operating should be evaluated experimentally on the HRT.

2. Pressurizer

There is a possibility of a small build-up of fission product solids along the arm connecting the pressurizer to the main fuel loop. However, this will be restricted to the turbulent portion of the line.

With the new pressurizer design corrosion in the pressurizer should be minimized and no large accumulation of corrosion products is expected in the pressurizer.

3. System in General

Although there are no other major areas of stagnant liquid, solids can be expected to accumulate in tiny cracks and crevices where pipes and equipment are connected.

D. E. Ferguson
D. E. Ferguson

R. E. Leuze
R. E. Leuze

Robert A. McNees
R. A. McNees

DEF-REL-RAM/jr

APPENDIX A

Xe and Kr Stripping Calculations

By material balance, the production rate of a gaseous fission product must equal the total rate at which it is removed from the main circulating loop. Using the assumptions made by Aven[1] the following equation describes the behavior of a gaseous isotope in the HRT:

$$Y\alpha P = NV\left(\lambda + \frac{QH}{V}\right), \qquad (1)$$

where Y = fission yield of the isotope or precursor

$\alpha = 3.38 \times 10^{16}$ fissions/MW sec

P = HRT power, 10 MW

N = fission product concentration in main loop, atoms/ml

V = volume of main loop, 4.6×10^5 ml

λ = radioactive decay constant, sec^{-1}

Q = rate of gas let-down, 220 ml/sec at reactor conditions

H = ratio of fission product gas in gas phase to fission product gas in liquid phase, 7.33.[2]

The destruction of an isotope by neutron capture was not considered here since the only isotope, Xe^{135}, with an appreciable cross section was considered by the method described in Appendix B which takes into account the stripping of I^{135} as well as Xe^{135}.

Sample Calculations

Using as an example Kr^{88} for which Y = .037, $\lambda = 6.95 \times 10^{-5}$, the number of atoms in the main loop are:

$$NV = \frac{.037 \cdot 3.38 \times 10^{16} \cdot 10}{6.95 \times 10^{-5} + \frac{220 \cdot 7.33}{4.6 \times 10^5}} = 3.5 \times 10^{18} \text{ atoms.}$$

The rate of Kr^{88} stripping is then,

$$NV \frac{QH}{V} = 3.5 \times 10^{18} \cdot 3.5 \times 10^{-3} = 1.22 \times 10^{16} \text{ atoms/sec.}$$

It should be pointed out that some fraction of the Xe and Kr which enter the recombiner condenser leaves in the condensate. However, only the gases in the condensate pumped back to the reactor circulating pump and pressurizer affect the concentration in the reactor since the liquid returned to the dump tank is effectively stripped by the boil-up. The fraction of Xe let down to the low pressure system that returns to the main loop is 12% and Kr, 8%, based on the analysis given in Appendix B.

Decay of Radioactive Isotopes in the Line to Charcoal Beds

The residence time for gas flowing at 500 ml/min in the line between the recombiner condenser and the charcoal beds is as follows:

dead space in condenser[2]	4.24×10^3 sec
6' of 1" pipe	$.11 \times 10^3$ sec
cold trap[2]	1.95×10^3 sec
220' of 1/2" pipe	1.58×10^3 sec
160' of 3" pipe	28.0×10^3 sec
Total	3.6×10^4 sec

Using Kr^{88} as an example, 3.6×10^4 sec are equal to 3.61 half-lives and the 1.22×10^{16} atoms/sec entering the off-gas system are reduced to 1.01×10^{15} atoms/sec entering the carbon beds.

Delay of Fission Gases by Carbon Beds

Leland[3] has established the design specifications of the HRT charcoal beds to maintain the maximum charcoal temperature below 100°C and limit the activity of the exit gases to essentially 5 curies/day

of 10.27 y Kr^{85}. No attempt is made here to establish the validity of Leland's temperature calculations, but a simplified check of the hold-up time for Xe and Kr on the charcoal beds is given below. The conditions used are: reactor operating at 10 MW, 500 ml/min of O_2 flowing into the carbon beds containing the fission product gases from the reactor core. In the charcoal beds,

$$V = K\ p^n$$

where V = volume of gas adsorbed, ml/gram of charcoal

p = gas pressure, mm Hg

n and K = constants that depend upon temperature.

To obtain values of K and n for Xe and Kr under the conditions of the charcoal beds, Leland (ORNL-CF-55-9-12, page 33) extrapolated data compiled by J. M. Holmes. The following values taken from this extrapolation are used here in estimating the minimum hold-up time for Xe and Kr.

Temperature (°C)	Xe		Kr	
	K	n	K	n
35	0.63	0.85	0.13	1.0
50	0.45	0.87	0.087	1.0

Since the charcoal beds have such a large safety factor,[3] it is reasonable to assume that some large fraction of the charcoal is at a temperature not greatly in excess of the cooling water temperature, 30°C. A temperature of 35°C seems reasonable for 90% of the charcoal in the adsorber. (The 6-in. section with a design safety factor of 6[3] alone contains 91% of the total charcoal.)

At equilibrium the concentration of rare gases is constant throughout this hypothetical section of charcoal bed, which is taken to contain 3.3×10^5 ml or 1.06×10^5 grams of charcoal (80% voids-density of charcoal 0.4 g/ml). The equilibrium partial pressure of Kr was found

by taking the ratio of the Kr flow rate to the total flow of gas. The Kr flow rate from the carbon beds is 1.34×10^{16} atoms/sec (from Table 1) or

$$\frac{1.34 \times 10^{16} \times 22.4 \times 10^{3} \times 60}{6.06 \times 10^{23}} = .03 \text{ ml/min.}$$

The flow of Xe from the beds is 6.05×10^{16} atoms/sec (from Table 1) or

$$\frac{6.05 \times 10^{16} \times 22.4 \times 10^{3} \times 60}{6.06 \times 10^{23}} = 0.134 \text{ ml/min.}$$

The approximate partial pressures of the two gases are then:

$$\text{Kr, } \frac{760 \times .03}{500} = .045 \text{ mm Hg}$$

$$\text{Xe, } \frac{760 \times .134}{500} = .20 \text{ mm Hg.}$$

At 35°C the amount of Xe on the charcoal is:

$$V = .63\ (.20)^{.85} = 0.160 \text{ ml/gram of charcoal,}$$

and the amount of Kr

$$V = 0.13\ (.045)^{1.0} = .00585 \text{ ml/gram.}$$

The total volume of gases at standard conditions on the hypothetical charcoal bed is then:

$$\text{Xe, } 0.160 \cdot 1.06 \times 10^{5} = 1.7 \times 10^{4} \text{ ml}$$

$$\text{Kr, } 0.00585 \cdot 1.06 \times 10^{5} = 6.2 \times 10^{2} \text{ ml.}$$

Therefore, one charcoal bed represents a minimum residence time of 1.27×10^{5} min (88 days) for Xe and 2.07×10^{4} min (14.5 days) for Kr. Using two beds in parallel would double the amount of charcoal and the residence times would be about 180 and 30 days respectively for Xe and Kr.

To illustrate the effect of temperature on the retention time of Xe and Kr the above estimate was also made using an average temperature of 50°C. This reduced the residence time for Xe from about 15 days to 10 and for Kr from 90 days to 60. However, it is felt that in view of

the large safety factor designed into the beds this average temperature is overly pessimistic.

APPENDIX B

Stripping of Iodine and Rare Gases: Calculations

The approximate flows and conditions that will exist in the HRT system at 10 MW operation are given in Figure 3.[5] By assuming that the Xe, Kr and I_2 reach equilibrium between the vapor and liquid phases in the main loop, the entrainment separator, the dump tank, and the recombiner condenser the following material balance equations can be written.

Around the low pressure system,

$$(5.68 + 13.2\ H')N_1 = 4.74\ N_2 + (0.95 + 0.5\ H)N_3. \qquad (1)$$

Around the recombiner condenser,

$$7600\ H''N_4 = (4.00 + 0.5H)N_3. \qquad (2)$$

Around the dump tank,

$$3.06\ N_3 + 5.68\ N_4 = (4.74 + 6440\ H'')N_2 \qquad (3)$$

And, if removal of the gas by chemical processing is neglected, for a stable isotope

$$0.5\ HN_3 = p. \qquad (4)$$

The nomenclature used is as follows:

N_1 = concentration of gas in solution in main loop, atoms/l.

N_2 = concentration of gas in dump tank.

N_3 = concentration of gas in condensate.

N_4 = concentration of gas in liquid leaving the entrainment separator.

UNCLASSIFIED
ORNL-LR-Dwg #11886

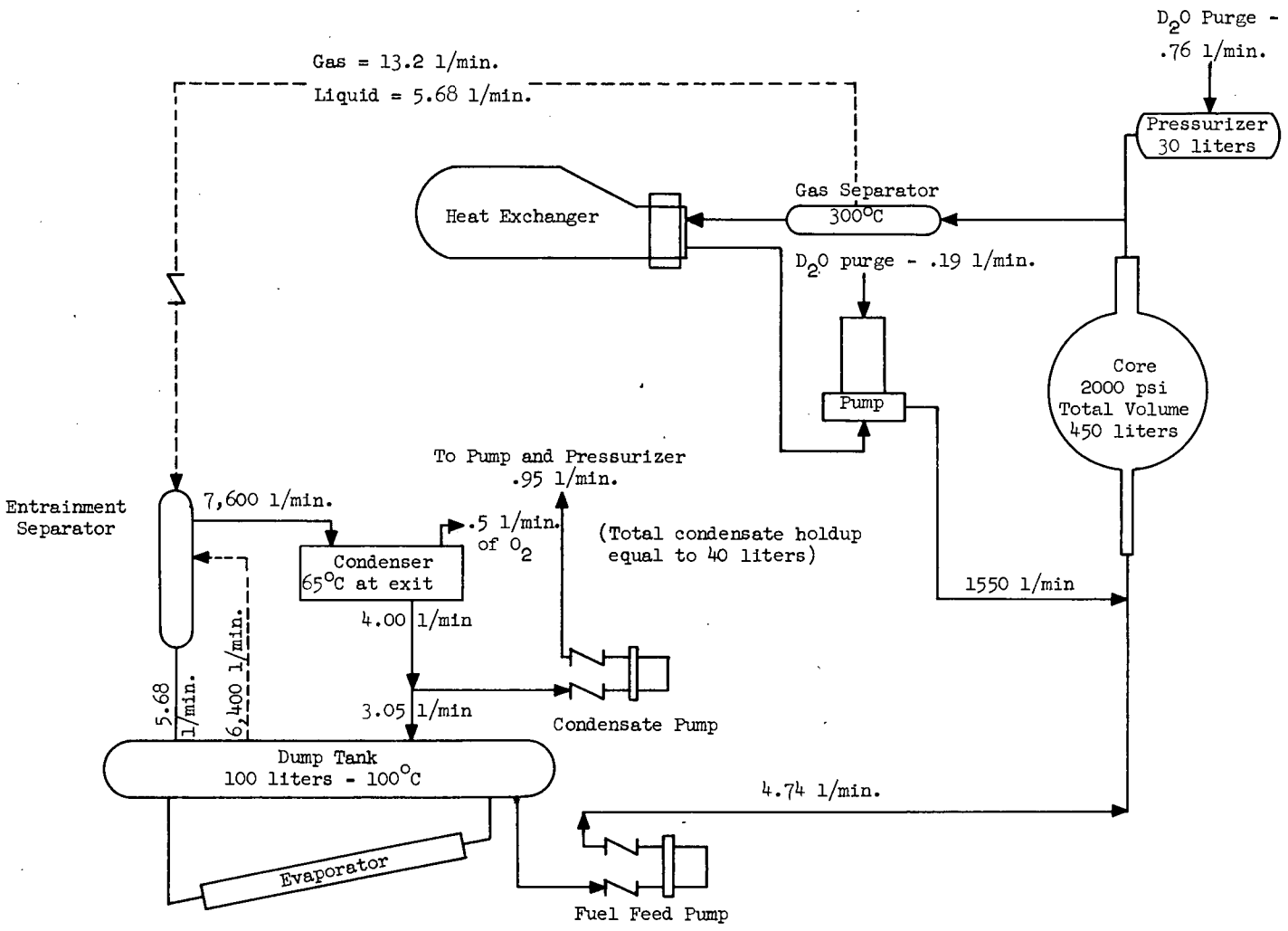

Fig. 3 Schematic Diagram of HRT Let-Down System

[redacted]

H = gas distribution coefficient at 65°C, $\frac{\text{atoms per ml vapor}}{\text{atoms per ml liquid}}$.

H' = gas distribution coefficient at 300°C.

H" = gas distribution coefficient at 100°C.

p = rate production, atoms per minute.

The distribution coefficients used are given in the following table.

Gas Distribution Coefficients[a]

Element	H (65°C)	H" (100°C)	H' (300°C)
Kr	25	24	7
Xe	18	14	7
I	0.11	0.06	0.5

a. The values for Kr and Xe at 300°C were taken from reference 3, the value for I_2 at 300°C from reference 6, the values for I_2 at 65° and 100°C were calculated from data found in references 7, 8, and 9 and the values for Kr and Xe at the lower temperatures were extrapolated from data found in references 10 and 11.

For the three gases the following concentration ratios were calculated from equations 1, 2, and 3.

Concentration Ratios

	N_4/N_3	N_3/N_2	N_3/N_1	N_1/N_2
I_2	.0048	232	12.3	18.9
Xe	8.03×10^{-5}	3.78×10^{4}	12.4	3.05×10^{3}
Kr	8.4×10^{-5}	5.25×10^{4}	7.6	6.9×10^{3}

and for a stable isotope the concentrations in terms of production are:

[redacted]

	Concentration - atoms/liter		
	N_1	N_2	N_3
I_2	2.68 p	0.142 p	33 p
Xe	0.012 p	3.76×10^{-6} p	0.0143 p
Kr	0.011 p	1.59×10^{-6} p	0.083 p

The rate at which the fission product gases are let-down is, from equation 1,

$$(5.68 + 13.2\ H')N_1,$$

and the rate at which a fission product gas is pumped back into the reactor by the condensate and fuel feed pump is $0.95\ N_3 + 4.74\ N_2$. Therefore, the fraction of a fission product gas that is returned to the reactor is

$$\frac{0.95\ N_3 + 4.74\ N_2}{(5.68 + 13.2\ H')N_1}.$$

The fraction is 97% for iodine, 12% for Xe and 7% for Kr. These values for Xe and Kr were ignored in the calculation presented in Appendix A. The effective removal rate for iodine can now be calculated as follows:

The number of atoms in the reactor system, NV, is given by,

$$\begin{aligned} NV &= 450\ N_1 + 100\ N_2 + 40\ N_3 \\ &= 2540\ p \end{aligned}$$

and since the effective removal constant 1/T may be defined

$$\frac{VN}{T} = p,$$

$$NV = 2540\ \frac{NV}{T},$$

$$T = 2540 \text{ min}$$

and $1/T = 3.9 \times 10^{-4}\ \text{min}^{-1} = 6.5 \times 10^{-6}\ \text{sec}^{-1}$.

The number of atoms of a given isotope of iodine in the reactor can now be calculated from the following equation:

$$YQP = NV\,(\lambda + 6.5 \times 10^{-6})$$

YQP = the production rate, atoms/sec.

NV = the total number of atoms present.

λ = radioactive decay constant, sec^{-1}.

Using I^{135} as an example,

$$YQP = 19.9 \times 10^{15} \text{ atoms/sec},$$

$$\lambda = 2.88 \times 10^{-5},$$

$$\text{and } NV = \frac{19.9 \times 10^{15}}{2.88 \times 10^{-5} + 6.5 \times 10^{-6}} = 5.63 \times 10^{20} \text{ atoms.}$$

This can now be distributed according to the calculated ratios of concentrations, into the major liquid streams in the reactor. The volume of the condensate in the reactor system was taken as 40 liters, 30 liters in the pressurizer and 10 liters in the lines and pump back to the high pressure system.

Using I^{135} as an example,

$$NV = 5.63 \times 10^{20} \text{ atoms} = N_1 \cdot 4.5 \times 10^5 + N_2 \cdot 10^5 + N_3 \cdot 4 \times 10^4$$

$$= (4.5 \times 10^5 + 10^5 \cdot .053 + 4 \times 10^4 \cdot 12.3)N_1$$

$$\text{and } N_1 = \frac{5.63 \times 10^{20}}{9.47 \times 10^5 \cdot 10^3} = 5.95 \times 10^{11} \text{ atoms/ml},$$

$$N_2 = .053 \cdot 5.95 \times 10^{11} = 3.16 \times 10^{10} \text{ atoms/ml},$$

$$N_3 = 12.3 \cdot 5.95 \times 10^{11} = 7.3 \times 10^{12} \text{ atoms/ml}.$$

The main loop then will contain 2.67×10^{20} atoms of I^{135}, the 40 liters of condensate will contain 2.94×10^{20} atoms, and the dump tank 3.16×10^{18} atoms.

To calculate the concentration of Xe^{135} in the main loop it is now necessary to make the assumption that Xe produced in the condensate finds its way rapidly into the main loop.

The condensate return system and pressurizer represent a 7 hr hold-up for Xe and a 1 hr hold-up for iodine. By assuming that the Xe produced from iodine decay in the condensate return immediately enters the main loop and by ignoring the Xe return from the recombiner condenser, the errors tend to cancel. With these assumptions the Xe^{135} concentration in the main loop can be expressed as:

$$Y_2 \alpha P + N_1 V \lambda_1 = N_2 V \left(\sigma_a \phi + \frac{QH}{V} + \lambda_2\right)$$

where

Y_2 = independent fission yield of Xe^{135}, 0.003,
and the subscript (1) designates I^{135} and (2) Xe^{135}.

Then

$$N_2 V = \frac{.003 \cdot 3.38 \times 10^{17} + 5.63 \times 10^{20} \cdot 2.88 \times 10^{-5}}{3 \times 10^{-18} \cdot 5.6 \times 10^{13} + \frac{220 \cdot 7}{4.5 \times 10^5} + 2.11 \times 10^{-5}}$$

$$= 4.66 \times 10^{18} \text{ atoms.}$$

For the case where no Xe or iodine is returned to the main loop from the low pressure system, the following three equations apply.

$$Y_1 \alpha P = N_1 V \lambda_1 + N_1 Q H_1 + N_1 F$$

$$Y_2 \alpha P + N_1 V \lambda_1 = N_2 V (\lambda_2 + \sigma_a(Xe)\phi) + N_2 Q H_2 + N_2 F$$

$$\beta = \frac{\Sigma_a(Xe)}{\Sigma_a(U)}$$

where F is the liquid let-down rate, ml/sec.

With the HRT operating at 10 MW, a liquid let-down rate of 1.5 gpm and a gas let-down rate of 220 ml/sec the following values of the constants apply:

$V = 4.5 \times 10^5$ ml

[redacted]

$\lambda_1 = 2.88 \times 10^{-5}\ sec^{-1}$

$H_1 = 0.5$ at $300^{\circ}C$

$\alpha = 3.38 \times 10^{16}$ fissions/sec/MW

$P = 10$ MW

$F = 94.7$ ml/sec (liquid let-down rate)

$\Sigma_a(U^{235}) = 0.01510\ cm^2/ml$ (12.7 g of U^{235}/l at $300^{\circ}C$)

$H_2 = 7.0$ at $300^{\circ}C$

$\lambda_2 = 2.1 \times 10^{-5}\ sec^{-1}$

$\phi = 5.94 \times 10^{13}$

and

$N_1 = 4.21 \times 10^{19}$

$N_2 = 6.0 \times 10^{17}$

$\beta = .00026.$

[redacted]

REFERENCES

1. Aven, R. E., "Control of Xenon Poisoning by Stripping with Gas," ORNL-CF-54-2-200.

2. Van Winkle, R., "Heating in HRT Cold Traps from Radioactive Fission Product Gases," ORNL-CF-55-7-141.

3. Leland, T. W., "Design of Charcoal Absorbers for the HRT," ORNL-CF-55-9-12.

4. Blomeke, J. O., "Nuclear Properties of U^{235} Fission Products," ORNL-1783, Oct. 21, 1955.

5. Briggs, R. B., private communication, Feb. 1956.

6. Reichard, H. F., "Homogeneous Reactor Fuel Reprocessing Quarterly Progress Report," KLX-10012, Nov. 15, 1955, p. 3.

7. Seidell, A., Ed. Solubilities of Inorganic and Metal Organic Compounds, Vol. 1, 3rd Edition, Van Nostrand, New York, 1940, p. 654.

8. International Critical Tables, Vol. III, McGraw-Hill, New York, 1926, p. 201.

9. "Homogeneous Reactor Project Quarterly Progress Report for Period Ending January 31, 1956," ORNL-2057 (in press).

10. Seidell, A., Ed. Solubilities of Inorganic and Metal Organic Compounds, Vol. 1, 3rd Edition, Van Nostrand, New York, 1940, p. 1569 and International Critical Tables, Vol. III, McGraw-Hill, New York, 1926, p. 257.

11. Seidell, A., Ed. Solubilities of Inorganic and Metal Organic Compounds, Vol. 1, 3rd Edition, Van Nostrand, New York, 1940, p. 886 and International Critical Tables, Vol. III, McGraw-Hill, New York, 1926, p. 256.