UNCLASSIFIED

CENTRAL RESEARCH LIBRARY
DOCUMENT COLLECTION

OAK RIDGE NATIONAL LABORATORY LIBRARY
3 4456 0023189 9

ORNL-2286
Reactors-General cy. 3
TID-4500 (13th ed.)

OPERATION OF THE ORNL GRAPHITE REACTOR AND OF THE LOW-INTENSITY TEST REACTOR AND PREOPERATION ACTIVITIES AT THE RESEARCH REACTOR

ANNUAL REPORT FOR 1956

H. E. Seagren
J. A. Cox

CENTRAL RESEARCH LIBRARY
DOCUMENT COLLECTION
LIBRARY LOAN COPY
DO NOT TRANSFER TO ANOTHER PERSO
If you wish someone else to see this document, send in name with document and the library will arrange a loan.

OAK RIDGE NATIONAL LABORATORY
OPERATED BY
UNION CARBIDE NUCLEAR COMPANY
A Division of Union Carbide and Carbon Corporation
UCC
POST OFFICE BOX X · OAK RIDGE, TENNESSEE

UNCLASSIFIED

LEGAL NOTICE

This report was prepared as an account of Government sponsored work. Neither the United States, nor the Commission, nor any person acting on behalf of the Commission:

A. Makes any warranty or representation, express or implied, with respect to the accuracy, completeness, or usefulness of the information contained in this report, or that the use of any information, apparatus, method, or process disclosed in this report may not infringe privately owned rights; or

B. Assumes any liabilities with respect to the use of, or for damages resulting from the use of any information, apparatus, method, or process disclosed in this report.

As used in the above, "person acting on behalf of the Commission" includes any employee or contractor of the Commission to the extent that such employee or contractor prepares, handles or distributes, or provides access to, any information pursuant to his employment or contract with the Commission.

UNCLASSIFIED

ORNL-2286
Reactors-General
TID-4500 (13 th ed.)

Contract No. W-7405-eng-26

OPERATIONS DIVISION

OPERATION OF THE ORNL GRAPHITE REACTOR AND OF THE LOW-INTENSITY TEST REACTOR AND PREOPERATION ACTIVITIES AT THE RESEARCH REACTOR

ANNUAL REPORT FOR 1956

H. E. Seagren and J. A. Cox

Compiled from reports by:
W. R. Casto
L. E. Stanford
W. H. Tabor
T. C. Weeks

DATE ISSUED

JUL 25 1957

OAK RIDGE NATIONAL LABORATORY
Operated by
UNION CARBIDE NUCLEAR COMPANY
A Division of Union Carbide and Carbon Corporation
Post Office Box X
Oak Ridge, Tennessee

OAK RIDGE NATIONAL LABORATORY LIBRARY

UNCLASSIFIED

3 4456 0023189 9

ORNL-2286
Reactors-General
TID-4500 (13th ed.)

INTERNAL DISTRIBUTION

1. C. E. Center
2. Biology Library
3–4. Central Research Library
5–6. Laboratory Records Department
7. Laboratory Records Department, ORNL R.C.
8. E. E. Beauchamp
9. D. S. Billington
10. E. P. Blizard
11. C. J. Borkowski
12. G. E. Boyd
13. R. B. Briggs
14. D. W. Cardwell
15. R. A. Charpie
16. D. D. Cowen
17. J. A. Cox
18. S. J. Cromer
19. F. L. Culler
20. L. B. Emlet, K-25
21. E. P. Epler
22. J. H. Frye
23. J. H. Gillette
24. R. W. Johnson
25. W. H. Jordan
26. C. P. Keim
27. M. T. Kelley
28. E. M. King
29. J. A. Lane
30. R. S. Livingston
31. K. Z. Morgan
32. E. J. Murphy
33. M. E. Ramsey
34. P. M. Reyling
35. A. F. Rupp
36. H. E. Seagren
37. E. D. Shipley
38. A. H. Snell
39. H. F. Stringfield
40. W. H Sullivan
41. J. A. Swartout
42. E. H. Taylor
43. M. L. Nelson
44. A. M. Weinberg
45. G. C. Williams
46. C. E. Winters
47. E. J. Witkowski
48. ORNL – Y-12 Technical Library, Document Reference Section

EXTERNAL DISTRIBUTION

49. Division of Research and Development, AEC, ORO
50–51. Technical Information Extension, Oak Ridge
52-507. Given distribution as shown in TID-4500 (13th ed.) under Reactors-General category

CONTENTS

ORNL GRAPHITE REACTOR 1
Summary 1
Downtime Analysis 1
Performance of Reactor Fuel 1
Reloading of Graphite Reactor 4
Control System 4
Cooling System 4
Filters 4
Canal 5
Irradiation Services 5
Facility Usage 5
LOW-INTENSITY TEST REACTOR (LITR) 9
Summary 9
Downtime Analysis 9
Fuel Usage in the LITR 9
Fuel Recovery 9
Experimental Usage of Facilities 9
New Facilities 12
Local Control System 12
Remote-Control System 13
Demineralizer System 13
Cooling Water 14
General Improvements 15
Future Plans 17
OAK RIDGE RESEARCH REACTOR 19
Summary 19
Additions 19
Nonproject Additions 20
Miscellaneous Equipment 20
Training of Personnel 21

OPERATION OF THE ORNL GRAPHITE REACTOR AND OF THE LOW-INTENSITY TEST REACTOR AND PREOPERATION ACTIVITIES AT THE RESEARCH REACTOR ANNUAL REPORT FOR 1956

ORNL GRAPHITE REACTOR

Summary

The ORNL Graphite Reactor continued its normal steady operation during 1956. The downtime, 10.4%, was slightly higher than in 1955.

The fuel in the bonded slugs gave increased indication of some improper crystalline structure with the detection and discharge of 41 ruptured slugs. The rate at which slugs have been discharged has given added importance to the study of replacement with enriched slugs. This study has been given low priority to date.

The automatic control system continued to operate satisfactorily, although considerable maintenance was necessary on many phases of the reactor control equipment. The reactor cooling system operated well, the only incident being the burning out of the autotransformer in one fan cubicle.

The general cleanup of the canal area continued, and the general radiation background has now been reduced to 20 to 30 mr/hr. The main source of radiation is the canal wall with its absorbed activity.

The assignment and use of the various reactor irradiation and research facilities are enumerated as part of the study of the current and future uses of the reactor.

Downtime Analysis

An analysis of the downtime for the ORNL Graphite Reactor is presented in Table 1.

Performance of Reactor Fuel

In CY-1956 the fuel slugs of the Graphite Reactor began rupturing at a much higher rate than in any previous year – 41 ruptures occurred, compared with 19 in CY-1955. The number and type of slugs that have ruptured since 1944 are given in Table 2.

The high rupture rate has seriously depleted the supply of spare fuel slugs. If the rate should continue to increase, the spare fuel supply might be exhausted within a year or less. Table 3 shows the current status of the fuel inventory.

Approximately 41,600 Al-Si bonded slugs are in the reactor, most of which were charged in 1952. Eighty-three slugs of this type have ruptured since they were charged into the reactor.

In the fabrication of the bonded slugs a heat treatment was used to transform the uranium from the alpha to the beta phase. Faulty equipment, discovered after part of the slugs had been charged into the reactor, resulted in a considerable number of these slugs being nontransformed. For the past several years measurements have been made on the growth of slugs which were discharged from the reactor. All data obtained indicate that the beta-transformed slugs grow in length very slowly. The average growth rate has been less than 0.010 in./year.

In the nontransformed slugs the average growth rate has been about 0.150 in./year. Some slugs have grown more than 1.0 in. in a period of four and one-half years. Of 368 slugs measured, 13% grew more than 0.60 in. Individually, the growth rate of partially transformed slugs was erratic. Six partially transformed slugs grew more than 1.0 in.

Of the 41 ruptures in 1956, 32 were from lots which were nontransformed or only partially transformed. Data from 1952–1956 on the partially transformed and nontransformed slug lots are compared with those on the transformed slug lots in Table 4. Data on bonded slug ruptures occurring in 1956 are given in Table 5.

A change in the inspection procedure for detecting ruptured slugs was put into effect during 1956. The fuel channels containing thermocouples

Table 1. Analysis of ORNL Graphite Reactor Downtime

	Number	Duration (hr)
Scheduled Shutdowns		
Regular	52	720.4
Special for research	26	36.8
Special for operations	40	116.9
Subtotal	118	874.1
Unscheduled Shutdowns		
Operations	4	1.1
Research	2	0.5
Instrument Department	3	0.7
Maintenance	2	0.4
Equipment failures		
Operations	17	8.8
Research	2	1.1
Others	21	22.9
Subtotal	51	35.5
Total	169	909.6

Table 2. Slug Ruptures Since 1944

Calendar Year	Number of Ruptured Slugs
Bonded	
1956	41
1955	19
1954	4
1953*	14
1952*	5
Unbonded	
1953*	4
1952*	8
1951	15
1950	13
1949	14
1948	14
1947	13
1946	6
1945	14
1944	4

*Most of the reactor was loaded with bonded slugs in 1952.

Table 3. Inventory of Fuel for Graphite Reactor

	Number of Slugs	
	12/31/56	12/31/55
In Reactor		
Bonded slugs	41,620	41,844
Donut bonded slugs	21	21
Experimental bonded slugs	0	15
In Vault		
Bonded slugs	6,169	8,322
Donut bonded slugs	35	35
In Canal		
Bonded slugs	1,793	681
Unbonded slugs	3	3

Table 4. Comparison of Nontransformed and Partially Transformed Slug Ruptures with Transformed Slug Ruptures

Nontransformed and Partially Transformed Slugs		Beta-Transformed Slugs	
Lot No.	Number of Ruptures	Lot No.	Number of Ruptures
109	1	122	1
110	9	124	1
113	8	127	2
114	9	128	1
115	5	129	3
116	2	130	3
117	1	132	2
118	3	135	1
119	1	136	1
120	1	6137	1
121	3	138	4
139	1	145	1
154	5	149	1
155	5	162	1
		168	2
		169	1
		6206	1
		6213	2
	54		29

Table 5. Graphite Reactor Bonded Slug Ruptures in CY-1956

Lot No.	Rupture No.	Row No.	Number from West End of Row	Date	Days in Reactor	Temperature (°C)	Beta Transformed (%)	Growth of Slugs Measured* (in.) Minimum	Growth of Slugs Measured* (in.) Maximum	Number of Slugs Measured	Remarks
110	149	1766	10	4/11	1471	230	0			10	Indicated by probe
128	150	1363	2	4/30	1477	195	100				Located by visual inspection
116	151	2172	15	5/7	1491	215	57				Located by visual inspection
154	152	2176	14	5/14	1463	177	75				Located by visual inspection
113	153	2066	12	6/25	1546	204	0				Located by visual inspection
121	154	1869	Unknown	7/2	398	224	87.5				Located after slug row discharged
162	155	1661	22	7/9	1484	210	100	0.008	0.534	21	Located by visual inspection
155	156	1264	10	7/9	1519	230	67.6	0.006	0.033	9	Located by visual inspection
114	157	1974	40	7/10	1555	195	25				Indicated by probe
113	158	1772	17	7/11	1562	185	0				Indicated by probe
168	159	0964	3	7/16	1505	160	No information				Located by visual inspection
120	160	1271	16	7/16	1554	215	75				Located by visual inspection
114	161	2074	29	7/26	1571	205	25				Indicated by probe
114	162	2271	26	8/2	1584	213	25	0.102	0.866	25	Indicated by probe
114	163	1471	23	8/3	1578	196	25	0.076	0.860	21 (2 over 1 in.)	Indicated by probe
113	164	1971	12	8/3	1585	230	0	0.003	1.127	11	Indicated by probe
132	165	1476	16	8/6	1568	176	100	0.004	0.265	54	Located by visual inspection
132	166	1476	32	8/6	1568	157	100	0.004	0.265	54	Located by visual inspection
118	167	2173	29	8/6	1582	210	87.8				Located by visual inspection
138	168	1775	13	8/6	1581	200	100				Located by visual inspection
122	169	1873	27	8/11	1589	215	100				Indicated by probe
121	170	2061	11	8/13	1564	224	87.5				Located by visual inspection
155	171	2163	20	8/13	1554	180	67.6				Located by visual inspection
155	172	1975	20	8/13	1582	170	67.6				Located by visual inspection
121	173	2075	17	9/10	1610	202	87.5	0.003	0.062	16	Located by visual inspection
117	174	1863	26	9/23	1631	201	27.3				Indicated by probe
138	175	1473	11	9/24	1610	212	100	0.003	0.018	10	Located by visual inspection
154	176	2077	33	10/11	1613	182	75	0.016	0.268	32	Indicated by probe
114	177	2272	28	10/13	1650	210	25	0.012	0.900	28	Indicated by probe
110	178	1871	12	10/15	1662	202	0	0.023	0.683	11	Located by visual inspection
110	179	1776	8	10/22	1665	209	0	0.078 (Rupture 0.370)	0.691	52	Located by visual inspection
114	180	2171	20	11/1	1675	224	25	0.035	0.877	20	Indicated by probe
155	181	1578	4	11/5	1638	196	67.6	0.009	0.038	4	Located by visual inspection
113	182	2067	12	11/20	1694	187	0	0.136	0.899	41	Located by visual inspection
118	183	2265	26	12/3	1701	198	87.7	0.014	0.265	26	Located by visual inspection
114	184	2071	20	12/6	1710	220	25	0.107	0.818	20	Indicated by probe
110	185	1571	26	12/12	1716	194	0	0.135	0.958	26	Indicated by probe
114	186	2073	9	12/12	1710	236	25	0.010	0.404	9	Indicated by probe
139	187	1776	16	12/22	1699	172	77.7	0.018	0.082	16	Indicated by probe
124	188	1563	15	12/26	1717	197	100	0.101	0.912	15	Visual inspection; unable to measure 4 slugs greater than 1 in. in growth
109	189	1972	22	12/31	1735	193	Unknown	0.010	0.482	51	Indicated by probe

*Only part of the discharged slugs were measured.

had previously been inspected for ruptured slugs each week with an air sampling device called a "scanner." These rows are now checked by plotting temperature curves. Ruptures in thermocouple channels can be detected by a change in the temperature curve with a higher degree of reliability than by the old scanning method.

Reloading of Graphite Reactor

A study was conducted on the reloading of the Graphite Reactor with enriched fuel. A fuel element was designed which appears to be satisfactory. The use of a water spray in the air cooling system seemed to offer a possibility of operation at 6 to 10 Mw. It was believed that loading the reactor with about 40 kg of U^{235} would result in a large increase in thermal neutron flux. The increase over the present loading was due mostly to removal of absorber. By increasing the power by a factor of 2, an increase in thermal flux by factors of about 7 to 10 appeared possible.

Personnel shortage prevented completion of the analysis necessary for estimation of the safety aspects and changes necessary in the reactor control system.

Some work is continuing on improving the new fuel element by increasing the heat transfer coefficient. It is hoped that more work on the control system modifications and analysis can be started soon.

Control System

The reactor controls gave considerable trouble. Inspection of the selenium rectifiers on the safety rods showed that they were delivering 300 ma instead of the maximum 950 ma. New rectifiers were installed on all three rods. A faulty clutch was replaced on the No. 7 safety rod hoist. The two top guide bearings were replaced on the No. 6 shim rod, and the rod track was shimmed $\frac{1}{8}$ in. The oil gear pump for the No. 5 shim rod required replacement of the insert and withdrawal coils on the solenoid valve.

The automatic control system has performed satisfactorily. The neutron ion chamber in hole 40 became defective and was changed in August. The PAT amplifier for the servo control system gave minor trouble when a tube failed or became oversensitive.

Minor trouble in the blockout system was traced to dirty contacts. A new dust cover was made and was placed over the relay panel.

Considerable trouble occurred in the old annunciator system. The system will be replaced. The Graphite Reactor has been operated for many years with galvanometers as the main startup instruments. It is now planned to install a fission chamber–count rate meter and an ion chamber with a period–log N meter for the startup instrument.

Cooling System

The two 900-hp motors and compressors have operated well during the year, although trouble did occur in the No. 2 fan cubicle. The autotransformer caught fire and burned; a short in the transformer is believed to have been responsible. On quarterly inspections of the cubicles, contact points were changed and set. The bearings on the motors and compressors were inspected and found to be in good condition.

The north and south mattress plates were changed in April and October, respectively.

Filters

During May the inlet filters and the No. 1 filters in No. 3 cell were changed. The filter pressure drop vs time curves are shown in Fig. 1. The last filter changes occurred as follows:

Cell No.	Date Changed	
	Glass Wool Filter	Paper Filter
1	5-8-50	5-25-51
2	4-9-53	5-25-51
3	5-14-56	5-10-54
4	8-16-54	7-6-54

A comparison of the filter house pressure drops with those of a year ago and with clean filters is given in Table 6.

Table 6. Pressure-Drop Data

	Pressure Drop (in. water gage)		
	Glass Wool	CWS No. 6	Total Across Filter House
12-31-56	2.3	2.1	5.6
12-31-55	2.3	1.6	5.3
Clean filters	1.1	1.3	3.3

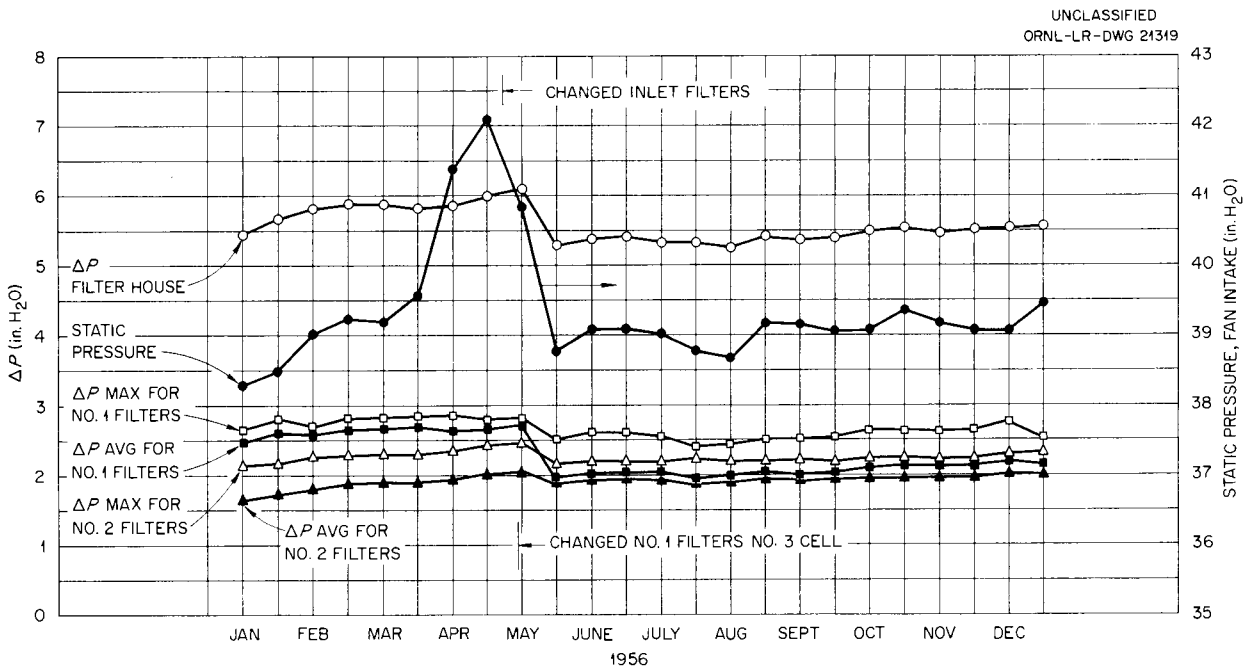

Fig. 1. Filter Pressure Drop vs Time Curves.

Canal

The general condition of the canal is the best it has been for several years. The radiation background is 20 to 30 mr/hr. This radiation comes primarily from the canal walls, which have absorbed considerable amounts of radioactivity from the water. A record number of ruptured slugs has been discharged to the canal this year, some almost completely oxidized. Considerable amounts of fission gases were found to be escaping from the canal water shortly after a rupture was discharged to the canal. This problem was solved by immediately canning the ruptured slug and venting the gas through the hot laboratory exhaust system.

The long-lived radioactivity in the canal water changed markedly as the cleanup program progressed. Examples of analyses are shown in Table 7. The gross activity increased over that of CY-1955 due to the large number of ruptured slugs.

It is planned to place lead shields along the canal walls and extending about 1½ ft under water to reduce the background. Listed below are some background readings taken with a paper shell ion chamber in the canal.

	Activity (mr/hr)	
	January 1956	December 1956
Average in walkway	35	20
Over water at walls	125	85

Irradiation Services

Table 8 gives data on the use of reactor facilities for irradiation purposes.

Facility Usage

With the current studies on enriching the reactor fuel and raising the flux and power levels, the following data are supplied to indicate the use of the Graphite Reactor facilities.

Holes 3, 16, and 21 were used for the production of P^{32} from sulfur and were occupied 100% of the time.

Holes 4, 18, and 61 were used to irradiate various odd-sized items such as automobile piston rings and antimony-beryllium sources and were in service 100% of the time.

Hole 10 was used for exposures of miscellaneous materials at a controlled temperature of 50°C and was employed 100% of the time.

Hole 11 was used by the Chemical Technology Division for conducting thorium slurry studies, 64% of the time.

Hole 12 was used by the Solid State Division as a cryostat for radiation damage studies at extremely low temperatures and was occupied 100% of the time.

Holes 13 and 14 were used by the Operations Division for making "unit irradiations" for the radioisotope program. The equipment was in use 100% of the time.

Hole 15, the south end, was used 45% of the time by the Solid State Division–GE for component testing; the north section was unassigned.

Table 7. Canal-Water Activity

	December 1955		December 1956	
	Activity		Activity	
	Counts/min/ml	Per Cent	Counts/min/ml	Per Cent
Gross gamma*	572	100	912	100
Cs^{137} gamma	83	15	139	15
Co^{60} gamma	450	79	185	20
Ba^{140}	0		15	2

*Reading obtained from a scintillation counter through a 1 g/cm^2 aluminum shield.

Table 8. Irradiation Services

Hole No.	Number of Samples		Type of Samples	Remarks
	Radioisotope Sales Dept.	Research		
3	75	0	4½ lb of sulfur each	P^{32} production
4	42	2	Service irradiations	
10	138	542	Short-term irradiations	
13	275	8	Short-term irradiations	
14	1740	122	Short-term irradiations	
16	58	0	4½ lb of sulfur each	P^{32} production
18	11	1	Service irradiations	
21	70	0	4½ lb of sulfur each	P^{32} production
22	107	447	Short-term irradiations	
A		0	$CaCO_3$ slugs	
61	12	0	Service irradiations	
East Animal Tunnel	0	3	Activation analysis	
West Animal Tunnel	0	35	Activation analysis	
1570	124	0	Bonded slugs	Iodine production
1668	120	0	Bonded slugs	Iodine production

Hole 17, the north portion, was assigned to the Physics Division, who installed a neutron collimator for investigation of fission-product energies and used the facility 100% of the time. The south end of this hole was not used.

Hole 19 was occupied, 100% of the time, by the Solid State Division for irradiation of plastics in a water-cooled tube to study radiation effects.

Hole 20, the north end, which contains a stringer of solid graphite equipped with thermocouples, was used by Reactor Operations to measure the graphite temperature.

In the south half the Solid State Division–GE conducted components tests and used the facility 55% of the time.

Hole 22 was used by the Operations Division for operating two pneumatic sample tubes and was occupied 100% of the time.

Hole 50, the north half, was used by the Solid State Division to study radiation effects on electrical insulating materials. The south side of this facility was occupied 100% of the time by a neutron collimator for neutron diffraction studies.

Hole 51, the north section, containing a water-cooled neutron converter, was used, 100% of the time, by the Solid State Division to study the effects of fast neutrons upon materials. The south half was allotted to the Physics Division for insertion of a collimator for a neutron spectrometer; the equipment occupied the facility 100% of the time.

Hole 52, the north end, was used by the Solid State Division for low-temperature studies of semiconductors, 100% of the time. In the south end the Physics Division conducted experiments to determine the effect of extremely low temperature upon the angular distribution of fission products emitted from thin layers of fissionable material; the experiments occupied the hole 90% of the time.

Hole 56, the north end, was used by the Physics Division for installation of a fast pneumatic rabbit facility. During the last year, the facility was used 82% of the time by the Applied Nuclear Physics Division in studies of the fission gamma-ray spectrum. The south portion, which contains a pile oscillator for determining thermal neutron cross sections, was reserved by the Solid State Division–GE and ORSORT 100% of the time.

Hole 57, the north end, was occupied 100% of the time by a collimator used for experiments and training by ORSORT. The south end was reserved by the Solid State Division but was not used.

Hole 58, which contains a neutron collimator, was used by the Chemistry Division in the study of crystal structure by neutron diffraction 100% of the time.

Holes 59 and 60 were used by the Solid State Division–GE 45% of the time, for making studies of radiation damage to components.

Animal Tunnels and Slant Thermal Tunnel were employed 50% of the time by various research groups for making radiation damage studies; numerous other irradiations were made, including a large group of seeds for mutation studies.

Thermal Column was used by the Applied Nuclear Physics Division in basic shielding investigations and was in service 91% of the time.

Core Hole was used by the Applied Nuclear Physics Division, 100% of the time, for shielding work.

Holes B and C were used by the Solid State Division for experiments to determine radiation effects upon the electrical properties of conductors and were in use 100% of the time.

Holes 1768, 1867, and 1968 have been charged with donut slugs and were used as fast neutron facilities by the Solid State Division for various exposures 60% of the time.

LOW-INTENSITY TEST REACTOR (LITR)

Summary

The LITR operated satisfactorily in CY-1956. No major troubles developed and the facility usage remained high. Four new research facilities and two radioisotope facilities were developed. Two additional research facilities are planned for the near future.

There were 301 shutdowns, 174 scheduled and 127 unscheduled. Of the 127 unscheduled shutdowns, 59 were caused by reactor control components and associated equipment failure, and 55 were caused by research equipment failure. Operations planned 55 scheduled shutdowns and research planned 119.

The highest number of equipment failures resulting in shutdowns was caused by the period amplifier, which has been repaired. Two other major causes of shutdowns, the log *N* amplifier and the magnet amplifiers, are under study.

The remote-control facility has been proved to be safe and adequate, and an application for permission to operate the LITR from this remote facility has been submitted to the AEC.

Foremost among the major improvements at the LITR during CY-1956 was the installation of the new grid assembly. The grid assembly greatly expanded the usefulness of the reactor core and made less difficult the exposure of the core during shutdowns.

No serious contamination or radiation of building or personnel occurred during the year.

Downtime Analysis

An analysis of the downtime at the LITR during 1956 is given in Table 9.

Fuel Usage in the LITR

In CY-1956, 14 fuel elements were added to the core and 12 were removed. Two special elements containing approximately one-half the usual number of fuel plates were added to the core, bringing the total number of fuel elements to 28. The special fuel elements were placed in core positions C-31 and C-41 (see Fig. 2) and were designed to serve as fast-neutron irradiation facilities.

Table 10 shows the initial weights of U^{235} in the fuel elements added and the depleted weights of the U^{235} in the fuel elements removed. The burnup, calculated at 1.26 g/Mwd, includes the fission loss and the conversion of U^{235} to U^{236}.

Fuel Recovery

Since operations were begun at the LITR in 1951, 96 fuel elements, including 27 Bulk Shielding Facility elements, have been shipped to Arco, Idaho, for recovery processing. Recovery data on 90 of these have been received and are as follows: of 11,439.53 g of SS material containing 10,257.68 g of U^{235} shipped, 11,316.10 g of SS material containing 10,122.9 g of U^{235} was recovered.

Experimental Usage of Facilities

The utility of the LITR was again demonstrated by the large number of scheduled shutdowns for research. During 1956, there were 119 scheduled shutdowns for the various research projects. Most of these shutdowns were for the purpose of taking data from experiments requiring that the reactor power be reduced to a low level for several hours. To obtain such data in a less flexible reactor would require the use of very complex experimental equipment.

During 1956, 84 engineering experiments and target exposures were conducted in the 22 research facilities in the LITR. In addition, approximately 1046 target exposures were made for research and for the radioisotope production program in the pneumatic tubes and core exposure facilities.

The major trouble encountered during the year was malfunction of instruments. Very little difficulty was experienced from radioactive gas leaks, radioactive dust, or direct radiation from experiments.

Table 9. Analysis of LITR Downtime

	Number	Duration (hr)
Scheduled Shutdowns		
Operations	55	789.9
Research	119	716.7
Subtotal	174	1506.6
Unscheduled Shutdowns		
Operations	2	0.4
Research	3	1.6
Others	8	4.7
Equipment failure		
Operations	59	45.5
Research	55	181.9
Subtotal	127	234.1
Total	301	1740.7

UNCLASSIFIED
ORNL-LR-DWG 21320

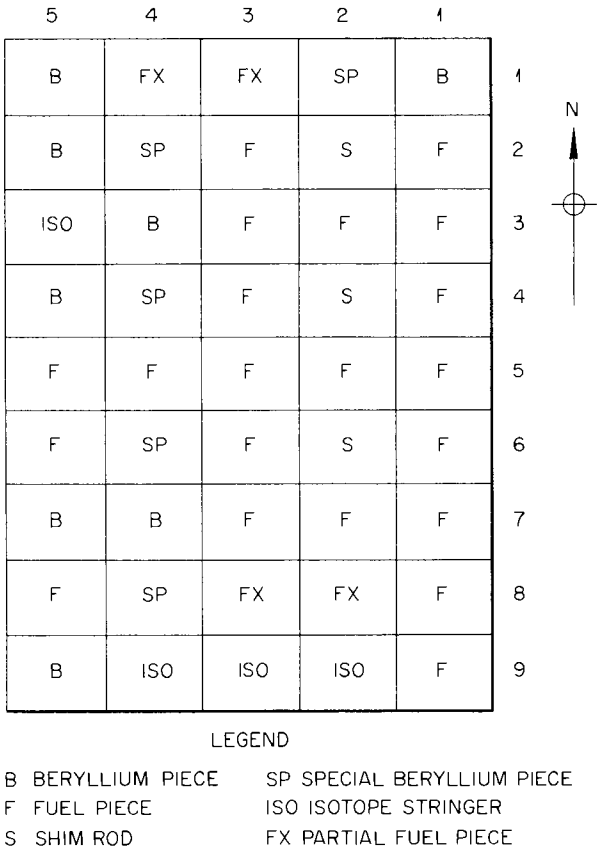

Fig. 2. LITR Fuel Loading Pattern, December 31, 1956.

A brief discussion of each experiment facility is given in the following sections, and a summary of the shutdowns is given in Table 11. In come cases the shutdowns coincide, so that the true downtime of the reactor is not indicated. The purpose is to indicate the shutdowns required by each facility; the trouble shutdowns do not coincide.

Table 10. Fuel Usage in the LITR in 1956

	Weight of U^{235} (g)		
	Original	Depleted	Burnup
Fuel Elements Removed			
Fuel Piece			
L-45	168.710	97.082	71.628
L-68	200.010	173.764	26.246
L-46	168.460	95.183	73.277
L-40-S	101.101	30.598	70.503
L-39	168.290	91.179	77.111
L-48	200.410	110.397	90.013
L-43	168.750	87.089	81.661
L-42	168.810	93.606	75.204
L-44	168.750	83.039	85.711
L-26-PSI	84.440	36.553	47.887
Total	1597.731	898.490	699.241
Average	159.773	89.849	69.924
Shim rod L-28-S	130.380	0	130.380
Shim rod L-23-S	131.580	86.546	45.034
Fuel Elements Added			
Fuel Piece			
L-66	200.010		
L-71-PSI	84.760		
L-67	200.010		
L-72	199.980		
L-73	199.980		
L-77-PSI	94.740		
L-78	94.740		
L-72-PSI	147.480		
L-74	199.980		
L-75	199.640		
L-76	199.130		
L-79	200.010		
Total	2020.460		
Average	168.371		
Shim rod L-63-S	131.310		
Shim rod L-69-S	132.140		

Table 11. Analysis of LITR Shutdowns

Facility	Number of Experiments	Days in Use	Per Cent of Time Used	Special Planned Shutdowns	Average Length of Planned Shutdowns (hr)	Trouble Shutdowns	Average Length of Trouble Shutdowns (hr)
HB-1	1	365	100	2	1.833		
HB-2	3	98	26.8	3	13.179	11	9.495
HB-3	11	215	58.9	1	18.000		
HB-4	2	126	34.5	5	44.940	5	0.653
HB-5	14	139	38.1	38	6.348	15	2.450
HB-6	5	203	55.6	34	5.105	5	0.503
C-42	11	167	45.8	11	1.109	4	0.429
C-44	15	186	51.0	17	1.171	9	1.000
C-46	4	238	65.2	2	3.083	5	2.847
C-48	10	326	89.3	2	0.409	1	0.283
V-1	0	0	0	0		0	
V-2	8	19	5.2	4	7.171	0	
C-28	*	250	68.5				

*Experimenter exposed sample intermittently.

Horizontal Beam Hole HB-1. – The HB-1 facility, which contains a chopper-type neutron velocity selector, was in use full time.

Horizontal Beam Hole HB-2. – Three HRP loop experiments and several flux monitors were irradiated in this facility.

Horizontal Beam Hole HB-3. – Experiments included stress corrosion, fuel corrosion, and tensile and impact specimens.

Horizontal Beam Hole HB-4. – Two HRP circulating-fuel-loop runs were made in this facility.

Horizontal Beam Hole HB-5. – Fourteen rocking-bomb HRP fuel-corrosion tests and several flux measurements were made during the year. The 15 trouble shutdowns were due primarily to instrument malfunctions and thermocouple failures.

Horizontal Beam Hole HB-6. – Five rocking-bomb HRP fuel-corrosion tests and one flux measurement were made.

Core Position C-42. – Eleven experiments were conducted in this facility by the General Electric Company. Most of them involved studies of high-temperature fuel elements. Others involved moderator materials, general radiation damage to materials, and one flux measurement.

Core Position C-44. – The Chemical Technology Division conducted 15 experiments in the C-44 facility, which consisted in pressurized capsule exposures of thorium slurries.

Core Position C-46. – Two miniature dynamic loop runs, a neutron beam-deflection experiment, and a series of flux measurements were made in this core position during the earlier part of the year. The position was later equipped with a wet tube, permitting the irradiation of materials requiring water cooling. A description of this installation is given elsewhere in this report.

Core Position C-48. – Tests in this facility involved studies of high-temperature fuel elements, shielding materials, and changes in such properties of material as mechanical stability, elasticity, and heat transfer.

Core Position C-28. – This fast-flux facility was used by the Solid State Division primarily for irradiation studies of crystals and has no instrument connections.

Slant Experiment Hole V-2. – The Health Physics Division performed eight low-temperature studies of semiconductors in this facility.

New Facilities

A partial fuel element, designed to permit the insertion of samples between fuel plates, was installed in core position C-31 to provide an irradiation facility for producing P^{32} from sulfur. It is expected that the production will be increased by a factor of approximately 200 over that from the Graphite Reactor because of the higher fast flux inside the fuel element.

Another partial fuel element was installed in core position C-41 for the Physics Division. This facility is for the irradiation of CaO to produce radioactive argon.

Two wet-tube irradiation facilities were installed in core positions C-46 and C-28. Both facilities are aluminum tubes approximately 30 ft long passing through packing glands in the reactor tank cover and terminating in the core. The tubes are perforated to permit the passage of reactor cooling water through them. The C-28 tubes terminate in partial fuel elements and are used by the Solid State Division to irradiate crystals. The C-46 tube terminates in a hollow beryllium core piece and is used by the Solid State Division primarily for radiation damage studies on organic materials.

A gamma irradiator was installed above the core on the south side of the reactor for the Chemical Technology Division. The irradiator consists of a 6-in.-ID aluminum tube approximately 18 ft in length whose top end passes through a packing gland in the south manhole cover and whose bottom end rests on the reactor core beryllium reflector. A cadmium thermal-neutron shield covers 1 ft of the bottom of the facility, and the tube is plugged at its top end with a removable solid Lucite cylinder. This facility will be employed in radiation damage studies.

Upon request of the Radioisotope Sales Department, a fast-flux, isotope-target-material irradiator was installed in position C-21. This facility is an aluminum container with the same external dimension as a fuel element and is partitioned so as to keep sample capsules separated.

Local Control System

The LITR underwent 59 shutdowns during 1956 as a result of reactor control equipment failure. The largest number of shutdowns was, by far, caused by trouble originating in the period channel, for the most part in the period amplifier and to a lesser extent in the log *N* amplifier. Many shutdowns were listed as resulting from causes of unknown origin; it is thought, however, that most of them originated in either the magnet amplifiers or in the period amplifiers. Listed in decreasing order of importance, other causes of shutdowns were as follows: log *N* amplifier failures; period–log *N* and safety recorder failures; miscellaneous causes such as limit switch, battery, safety amplifier, control, and plant power failures.

Period Channel. – Upon recommendation of the reactor control group, a composite amplifier was substituted in place of the period and period sigma amplifiers in the reactor safety circuit. This was done in an attempt to locate the origin of false period scrams which have been responsible for a large portion of the electronic scrams. As expected, the number of electronic scrams decreased markedly, indicating that the trouble had been originating in the period channel. Subsequent bench tests revealed intermittent malfunctioning of the voltage regulator tubes in the period amplifier. The trouble was corrected and the period amplifier and period sigma amplifier were returned to normal service. While the composite amplifier was in use, the reactor operated for a period of 93 consecutive days without an electronic scram.

Magnet Amplifiers. – There are indications that fluctuations in the magnet amplifier outputs have also been a troublesome source of reactor scrams. Since August 1956, hourly checks have been made on the outputs of the magnet amplifiers, and flucuations as great as 22 ma, or approximately 36% of the total output, have been observed. A program to study and attempt to correct this situation has been planned.

Sigma Amplifiers. – On May 8 the Instrument Department modified all LITR sigma amplifiers in order to avoid the possibility of an alarm failure in the event that a sigma preamplifier became disconnected from a sigma amplifier.

Shim Rod and Control Rod Limit Switches. – All regulating rod limit switches were replaced with new ones on July 24. Only one limit switch had been giving trouble, but the age of the remaining switches indicated that replacement would be desirable.

All three shim rod seat switches were replaced on June 27, and considerable difficulty was experienced because of the high radiation field in which the limit switches are located. All the permissible working time of 13 craftsmen was expended in the operation, which was carried on in a radioactive background in excess of 500 mr/hr.

Since these switches are incorporated in the reactor safety system, their replacement was of significant importance.

Amplidyne Generators. – Two servo system, amplidyne generators were replaced during 1956. One replacement was necessitated by a mechanical failure, and the other by an abnormal hunting noise resulting from internal trouble of unknown origin.

Remote-Control System

Since October 1955, the LITR has been operated, without incident, from the remote-control facility located in the control room of the Graphite Reactor. This remote-control panel is not used during startup operations or during periods when the Graphite Reactor is shut down. Also, an operator has been stationed in the LITR control room at all times while the LITR is operating to record data, observe remote operation, and take control of the reactor if necessary.

During the 15 months of operating the LITR as described above, there has been no incident to indicate that the operation of the LITR from the remote console without the on-site observer would not be completely safe.

In preparation for the anticipated operation of the LITR from the remote-control console, a system for checking the reliability of the remote instrumentation was initiated. Comparative readings are made of LITR instruments and their remote counterparts twice each shift. Discrepancies are noted and investigated. The results of this check indicate that the remote instrumentation is reliable and adequate.

In August of 1956 a request to control the LITR, except for startups, from the remote-control facility alone was submitted to the AEC.

Additional information on this system may be obtained from ORNL-2121.[1]

Since the original installation, the following facilities have been incorporated into the remote-control system:

1. An extension of the control desk telephone has been located at the remote-control console.
2. A microphone connected to the LITR public address system has also been located at the remote console.
3. A weathertight telephone set has been installed at the entrance to the top level, the only locked area, so that persons desiring permission to enter can call the remote operator.
4. A switch to actuate a mechanical opener on the top level door has been located on both the local control console and on the remote-control console.

Demineralizer System

Between July and November the bypass demineralizer system underwent extensive modification, the purpose of which was to increase the throughput flow rate and thereby increase the quality of the LITR cooling water.

By December 31, 2,775,000 gal of reactor cooling water had been bypassed through the improved demineralizer system. The resulting improvement in the reactor cooling water was immediately reflected in an increase of the specific resistance of the water and a decrease in the amount of each radioactive impurity. When the reactor vessel is opened during shutdown periods, the water is noticeably clearer; also, there has been a reduction in the radiation emitted from the surface of the water, reducing personnel exposure and contamination. The improvements in the new system have also tended to reduce personnel exposure through ease of operation and the increased amount of shielding. Table 12 presents an interesting comparison between the new and the old demineralizer system. Table 13 is a typical analysis for the reactor cooling water.

Prior to the modification, the system components were as follows: one mixed-bed column containing

Table 12. Comparative Effectiveness of the New and the Old Bypass Demineralizer Systems

	Average for Old System*	Average for New System
Specific resistance, ohm-cm	527,000	810,000
Gross activity, counts/min/ml	38,000	19,700
Na^{24}, d/min/ml	5.07×10^4	1.13×10^4
Np^{239}, d/min/ml	6.24×10^3	7.5×10^2
I^{131}, d/min/ml	210	<10
Radiation level 2 ft above open reactor tank, mr/hr	~50	~25

*Based on year prior to modification.

[1] J. A. Cox, L. C. Oakes, and W. H. Tabor, *Remote Control of the LITR*, ORNL-2121 (Aug. 1, 1956).

Table 13. Typical Analysis of Reactor Cooling Water

pH Analysis: 5.3

Constituent	Amount (ppm)
Al	<0.05
Be	<0.05
Ca	0.07
Cl	<1
CO_2	<0.05
Cu	<0.05
Fe	<0.05
H_2O_2	7
Mg	<0.05
Mn	<0.05
Ni	<0.05
NO_3	<0.05
Si	<0.05
SO_4	<1
Dissolved O_2	18
Total solids	2

18 ft^3 of IRA-410 anion resin and 12 ft^3 of IR-120 cation resin; two, alternately used, cation-bed columns, each containing approximately 2.5 ft^3 of IR-120 resin; one anion-bed column containing approximately 3 ft^3 of resin. The columns were operated in series, with the bypassed LITR cooling water passing through one of the cation-bed units first, the anion-bed unit second, and the mixed-bed unit last at the rate of approximately 15 gpm.

The purpose of the small cation and anion units was to protect the resin in the mixed-bed unit from radiation damage, which seems to result in loss of resin efficiency and capacity. The small cation and anion units were supplied with degraded resins from the demineralized water plant in Building 3004. When their effectiveness, based upon a decontamination factor of 20 for the cation resin and of 2 for the anion resin, decreased approximately 50%, the resins were regenerated. The resins were discarded when it became difficult to regenerate them as a result of particle cleavage or radiation degradation.

External radiation shielding for the cation and anion units consisted of 4 in. of lead around each cation unit and 8 in. of concrete in the form of stacked, solid blocks around the anion unit. The shielding was inadequate in both cases. The mixed-bed column, being unchanged in the demineralizer system modification, is inadequately shielded by 8 in. of solid concrete block, which also serves as a weather shed over the unit. The new system, put into service on November 7, incorporates the following: two 24-in.-dia columns 46 in. long, each containing 8 ft^3 of IR-120 cation resin; one 24 × 37 in. column containing 6 ft^3 of IRA-410 anion resin; one 18-in.-dia column 39 in. long containing 3.5 ft^3 of IRA-410 anion resin; and one mixed-bed column, the same as that used in the old system, containing 18 ft^3 of IRA-410 anion resin and 12 ft^3 of IR-120 cation resin.

The cation units are shielded by a double row of 8-in.-thick concrete blocks, and the anion units are shielded by a single row of 8-in.-thick concrete blocks on three sides and share a double row of 8-in. blocks with the cation units on the fourth side. As in the case of the mixed-bed column shielding, the shielding around the anion and cation units also serves as a weather shed. A conventional sheet metal roof covers the units.

In order to decrease the pressure drop across the system, all piping and valving is of 1½-in. size or greater. A booster pump on the demineralizer influent line enables the flow rate through the system to be maintained at approximately 45 gpm, an increase over the old system by a factor of approximately 3.

Before entering the reactor cooling water system, the demineralizer effluent passes through a solenoid valve which closes if the specific resistance drops below a minimum value of 200,000 ohms-cm. The valve is actuated by a resistance probe, which is also located in the effluent line. This device serves to guard against inadvertent contamination of the reactor cooling water with regenerating solutions and to shut off the bypass demineralizer system in the event of complete resin degeneration. Figure 3 illustrates the flow path of water through the demineralizer system.

Cooling Water

A study has been made by D. W. Moeller, Activation Analyses Group, Analytical Chemistry Division, of the radioactive nuclides present in the cooling water of the LITR. The following report was made subsequent to the installation of the more permanent system.

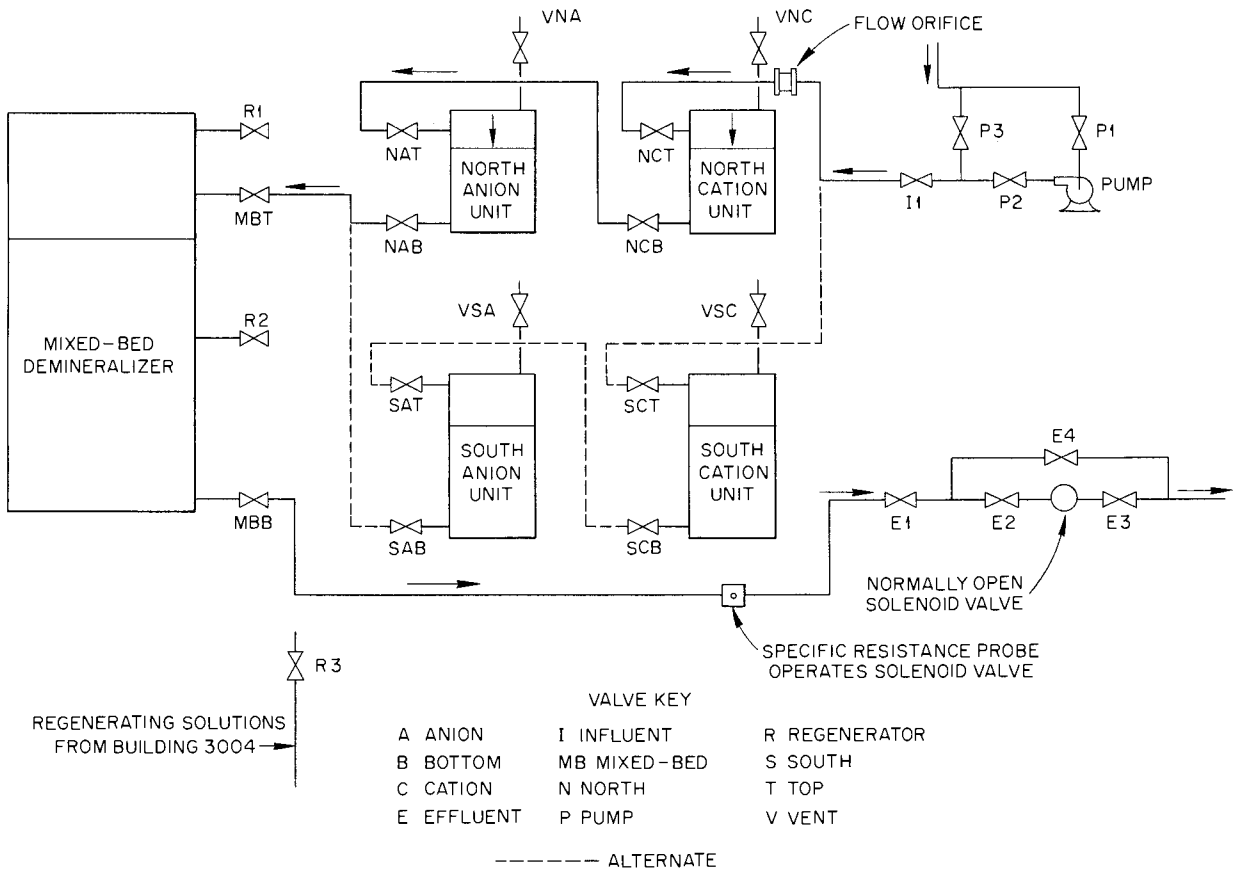

Fig. 3. Flowsheet for LITR Bypass Demineralizer.

Due to sampling and other losses, demineralized makeup water must be added to the system from time to time. Inasmuch as impurities in such water would possibly lead to the production of induced radioactive nuclides during the retention of the cooling water in the reactor, the purity of the makeup water was checked by neutron activation analysis. A summary of the induced radioactive nuclides found in the makeup water and of the radioactive nuclides found in the cooling water at various stages in the purification system is given in Table 14. Determination of the radioactive nuclides was based upon chemical separation, followed by decay and gamma spectral studies.

Sampling of the resin beds revealed that the predominant activity in the cation and mixed-bed units was in the top few inches of the columns. The anion bed contained a very large level of activity throughout the bed, which might explain why this bed was failing to remove the iodine activity from the water passing through it at the time of sampling.

A summary of the predominant radioactive nuclides present on each of the three resin beds is given in Table 15.

General Improvements

West Room Expansion. – To alleviate crowding of the instrumentation associated with the Chemical Technology and Reactor Experimental Engineering Division projects, the size of the west room of the LITR building was increased in floor area by 760 ft^2 at a cost of approximately $19,000. The new area will be used for instrumentation and air-conditioning equipment.

Midriff Enclosure. – The north area of the midriff has been enclosed by the Solid State Division to protect from the weather the equipment and

Table 14. Radioactive Nuclides* Present in Water at Various Stages of LITR Cooling System

Makeup Water**		Cation Exchanger Influent		Cation Exchanger Effluent		Anion Exchanger Effluent		Mixed-Bed Exchanger Effluent	
Nuclide	Half Life	Nuclide	Half Life	Nuclide	Half Life	Nuclide	Half Life	Nuclide	Half Life
Na^{24}	15.0 h	Na^{24}	15.0 h	$I^{131,135}$	8.05 d, 6.7 h	I^{131}	8.05 d	Cu^{64}	12.8 h
$Br^{80,82}$	4.6 h, 35.9 h	$I^{131,135}$	8.05 d, 6.7 h	Tc^{99m}	6.0 h	I^{133}	21 h	$Te^{132} + I^{132}$	77 h, 2.3 h
F^{18}	1.87 h	Cu^{64}	12.8 h	F^{18}	1.87 h	Cu^{64}	12.8 h	$Mo^{99} + Tc^{99m}$	67 h, 6.0 h
Mn^{56}	2.58 h	Np^{239}	2.33 d	Po^{233}	27.4 d	$Te^{132} + I^{132}$	77 h, 2.3 h	Ce^{141}	32 d
Cu^{64}	12.8 h	Mn^{56}	2.58 h	Sb^{122}	2.8 d	Ce^{143}	33 h	Ce^{143}	33 h
		$Sr^{91} + Y^{91m}$	9.7 h, 50 m	Mn^{56}	2.58 h	Ce^{141}	32 d	Cr^{51}	27 d
		$Mo^{99} + Tc^{99m}$	67 h, 6.0 h	Cr^{51}	27 d	$Mo^{99} + Tc^{99m}$	67 h, 6.0 h		
		Br^{82}	35.9 h			Cr^{51}	27 d		
		Pa^{233}	27.4 d						
		$Ba^{140} + La^{140}$	12.8 d, 40.2 h						
		Zn^{65}	245 d						

*Listed approximately in descending order of abundance at time of sampling. Only the more abundant nuclides are listed.

**As determined by neutron activation analysis.

Table 15. Nuclides* Present on Resins Used in LITR Cooling Water Purification System

Cation Resin	Anion Resin	Mixed-Bed Resin
Na^{24}	Tc^{99m}	I^{131}
Np^{239}	I^{133}	Ce^{141}
Zn^{65}	I^{131}	Zn^{65}
Co^{60} or Fe^{59}	Cr^{51}	

*Listed approximately in decreasing order of abundance.

personnel associated with the Miniature Dynamic Corrosion Loop Project. This completes the enclosure of the entire midriff area. The south section was enclosed a few years ago by the General Electric group.

Modified Upper Grid Assembly. – In November a modified upper grid assembly was installed which permits access to the fourth and fifth rows of the lattice with the grid in place. This increases the usefulness of the lattice for experimenters and also permits the experiments located in the fourth and fifth rows to be left in position whenever the grid is removed.

Control Room. – As part of a general cleanup program, the control room and control room annex were repainted and the floors were covered with tile.

Monitrons. – The monitron network throughout the LITR experiment locations was enlarged by the addition of four monitrons having boron chambers attached to long flexible leads. This feature increases the usefulness of the instruments considerably. The monitron system now includes six remote chambered monitrons and one standard monitron, all of which are connected to the control room and remote Tel-Alarm annunciators.

Hot Waste Holdup Tank. – A hot waste holdup tank has been installed between Building 3001 and Building 3005 and is currently used in connection with the experiments in facilities HB-2, HB-4, HB-5, and HB-6. The purpose of the tank is to permit the decay and the off-gassing to the reactor off-gas system of radioactive liquid wastes prior to their being discharged to the plant hot-waste-disposal system.

North Area Concrete Pad. – A new concrete walkway and a concrete pad were built to replace the gravel walkway on the north side of the control room annex to facilitate the removal of samples in heavy carriers.

Future Plans

Two new vertical facilities are being planned for the reactor. One, sponsored by Reactor Operations, is a 1-in.-ID aluminum tube, sample irradiation facility that passes through a packing gland in the south manhole cover and terminates in a beryllium core piece in position C-39. The other facility is a vertical experimental tube that enters the reactor vessel through a special fitting in the north wall of tank A and terminates in a special beryllium core piece in position C-43. This facility will be sponsored by the Chemical Technology Division.

Plans for the replacement of the No. 3 shim-rod drive mechanism are being considered. The design of the present No. 3 shim-rod drive mechanism, different from that of Nos. 1 and 2 shim-rod drives, is such that it makes maintenance and operation difficult. Also, a poorly designed packing gland in the No. 3 drive mechanism is responsible for significant losses of reactor cooling water.

The installation of a third safety channel, identical to the present No. 1 and No. 2 safety channels in the reactor control system, is being planned. Two other additions to the reactor control system are under consideration, a multipurpose monitoring recorder and a recorder to record the output of the magnet amplifiers. The Tel-Alarm annunciator system will undergo enlargement to accommodate an increased demand from experimenters.

OAK RIDGE RESEARCH REACTOR (ORR)

Summary

The construction phase of the ORR Project proceeded during CY-1956 under the direction of the ORR Project Group. The Reactor Operations Department continued to follow the design and construction phases as the future operator of the facility. This Department also undertook a series of design and requisitioning functions for facilities, instrumentation, and equipment beyond the original scope of the ORR Project.

Additions

The jobs done for the ORR Project by the Reactor Operations Department included the coordination of designs of the major additions to the ORR building, the design and requisitioning of additional facilities, the design and completion of the instrumentation monitoring systems, the design and requisitioning of miscellaneous equipment for use in and around the reactor, the mockup of the ORR mechanical controls, and the training of personnel.

Included in the major additions to the ORR building are the following: second-floor extension, hot cell, air-conditioning system, elevator, and basement hot laboratory.

Second-Floor Extension. – In the original design of the building, laboratory facilities were provided to accommodate only five laboratories, and, to date, requests for 13 laboratories have been received. Without this second-floor extension, which will provide an additional nine laboratories, the ORR would be unable to meet the demand. The two laboratories immediately north and south of the reactor are designed with removable-slab floors to permit future hot cell locations in these areas. The preliminary designs are complete and have been distributed for study.

Hot Cell. – Facilities will be required for handling highly radioactive materials, both radioactive isotope specimens and the dismantling of radioactive equipment. These operations can be performed effectively and efficiently in a hot cell, which is currently being designed and will be located over the west pool at the third-floor level. Its design includes accessibility from the pool, where radioactive samples will enter the cell, without personnel exposure. The facility, divided into two separate cells, will be equipped with lead-glass windows and manipulators.

Air-Conditioning System. – In view of past experience regarding demands for air conditioning on various research projects, and after checking with the various research personnel who are scheduling experiments in the ORR, it was quite apparent that a large number of small units would be needed. Based on an estimate by the ORNL Engineering Department, it was decided that air-conditioning the entire first, second, and third working levels with a central unit would be more economical and feasible than providing individual units. The design is under way and will make use of the present ventilating ducts on the first level, with new ducts to be installed on the second level and on the south third level. The unit will be housed in the room provided under the change house, which will be built on the northwest corner of Building 3042.

Elevator. – The various experiments that will be associated with the ORR will require assorted sizes and numbers of equipment. Since experiments and their associated equipment will be changing from time to time, a means of transporting from floor to floor is necessary. To accommodate this movement, a freight elevator, operated automatically and located in the southwest corner of the building, is being designed to serve all levels.

Hot Laboratory and Pneumatic Tube. – For extremely short-time exposures (10 min or less), a pneumatic tube facility is being designed. This tube, which will utilize one of the 3-in.-dia holes in the north experiment facility, will terminate in the hot laboratory, which will be constructed in the basement. This project (the pneumatic tube, a hot laboratory, and a counting room) will be used primarily by the Analytical Chemistry Division for study of short-lived radioisotopes. The design is in progress by the ORNL Engineering Department.

Nonproject Additions

Change House. – Original plans for the ORR building did not include provisions for a change house. Present facilities in the reactor area are inadequate. A recent survey indicates that such a facility is necessary to provide accommodations for about 120 persons who will be associated with the ORR, the LITR, the Graphite Reactor, and other facilities in this general area. Preliminary drawings have been issued for this addition, and construction drawings and specifications are now being completed.

Emergency Electric Power. – A continuous supply of electric power to the experimental facilities and the ORR control instrumentation is a necessity. To supplement the normal electrical service in time of power failure, an emergency power unit is required. At present, the Engineering Department is designing and writing the specifications for a 350-kw diesel power unit which will have adequate capacity to serve the ORR, LITR, and Graphite Reactor. Initially, it will serve only the ORR, with the tie-ins to the LITR and Graphite Reactor to be made at a later date.

Hydraulic Tube. – To meet the continuing requests for short-time service irradiations, a hydraulic tube is being designed. This facility will enter the reactor tank through a slanted hole to occupy a lattice position and will have its terminal point in the hot cell. Along its path, outside the hot cell, will be a pool station where samples can be removed when the hot cell is in use. This pool station will also serve as the loading zone. The heat production, resulting from the high flux, necessitates that samples irradiated for 15 min or longer be water-cooled. As a result, all samples exposed in this facility will be cooled by a continuous flow of water to remove excessive heat.

Anion Addition. – Experience gained from the operation of demineralizers on the LITR cooling water indicates that better results, longer runs, and longer resin life will result if the mixed-bed unit is preceded by an anion unit. This anion unit removes part of the radioactivity, and therefore the mixed bed is not exposed to high-level radioactivity. At the time of the original design of the ORR demineralizer, this important feature had not been evaluated. To take advantage of this experience, additional anion capacity has been designed, specifications have been written, and units have been ordered.

Helium Refrigerator Laboratory. – A laboratory to house helium refrigerator equipment will be located on the second level adjacent to the south side of the pool. A location close to the reactor is desired to minimize the cooling loss in the lines leading from the refrigerator to the experiment.

The design of the laboratory provides for easy dismantling. The roof is composed of removable panels and the floor consists of removable concrete slabs. When this experiment is terminated, this area can easily be utilized for other purposes.

Gamma Grid Irradiator. – The gamma grid irradiator, a rack of used fuel elements, will be used to irradiate samples in high fields of gamma rays. In order to measure the intensities of gamma rays in the irradiator, a monitor, consisting of a recorder, an electrometer, and an ionization chamber, was designed by the Instrument Department. The recorder and electrometer have been received, and the chamber is being fabricated.

Flow Integrator. – A flow integrator, which will monitor the throughput of the demineralizer system and permit the exhaustion date to be estimated, is being procured by the Instrument Department. In addition, it will provide information indicative of regeneration efficiency and the physical state of resins.

Scintillation Counter. – The radioactivities induced in the cooling waters will be monitored daily. For this purpose, a well-type scintillation counter has been purchased. Currently this instrument is being used to monitor activities in the LITR cooling water and 3001 canal water.

Miscellaneous Equipment

A variety of tools and equipment is necessary for the ORR. To cope with the many operations that will arise, design work has been completed and purchase orders have been issued for obtaining several items. The items which have been designed and are being fabricated are as follows.

Experiment Shield and Associated Equipment. – This shield will be used in inserting and/or removing experiments from the horizontal beam holes and the experiment facility 10-in. holes. The shield provides $7\frac{1}{2}$ in. of lead for shielding and when the 6-in. beam holes are being used, can be equipped with an additional sleeve to provide $8\frac{3}{8}$ in. of lead shielding. This shield will be mounted on a carriage and will be pulled or pushed by a gasoline-powered truck. The design has been

completed on the shield and carriage, and both are being fabricated. A Yale & Towne lift fork has already been received.

Storage Racks. – For continuous operation at the designed power level, frequent changes in the fuel and shim rods will have to be made. Storage racks for the fuel and shim rods are necessary. The design of these racks has been completed, purchase orders have been issued, and the units are being fabricated. The racks will be used to contain the depleted shim rods and the depleted fuel elements until they are either shipped to the fuel recovery plant or used in the gamma irradiator. Fuel elements which are temporarily removed from the core to rid the core of excess xenon may also be stored in these racks. Racks to accommodate light shim rods and 48 fuel elements are being purchased.

The gamma grid, a storage rack facility for special gamma irradiations, has been designed and is being fabricated. This unit, which will be used as an exposure facility, will utilize the fuel elements from the reactor to irradiate samples in a region of high-intensity gamma photons. After the fuel elements have decayed beyond usefulness, they will be removed to the regular storage rack or to the reactor or will be shipped to the fuel recovery plant.

Tools and Associated Equipment. – Various tools have been designed and are being purchased. These tools will be used to make various changes such as gaining access to the core area by removing the fuel access cover and other flanges; lifting the fuel element clamps to clear the core area; rearranging and/or removing fuel elements, reflector pieces, and shim rods.

To provide a working area above the reactor vessel at the top of the pool, a mobile working bridge has been designed and is being purchased. This bridge will be supported by casters and will travel the length of the pool on rails which will be mounted on the top of the pool sidewalls.

An underwater saw is being designed which will be used primarily for cutting fuel elements and shim rods in preparation for shipment to Arco for recovery. If the transfer carrier used for shipping LITR elements is to be used for the ORR, the size of the depleted fuel pieces must be reduced.

Two radioisotope target holders, which will be located in the lattice, have been designed and are being fabricated. These units will provide space for sixty $\frac{1}{2}$-in.-dia samples and eighty $\frac{3}{8}$-in.-dia samples. In the future additional facilities will probably be needed.

Models. – Two scale models of the ORR have been built for use in familiarizing personnel with the relation of the various components of the reactor. One of the models (scale, $1\frac{1}{2}$ in. equal to 1 ft) shows the detail arrangement of the reactor components inside the reactor vessel, while the other model (scale, $\frac{1}{2}$ in. equal to 1 ft) represents the complete pool with its relation to the various floor levels. These models will be used also for orientation of visitors.

Mechanical Control Assembly. – The mechanical controls for the ORR have been fabricated in the Research Shops. At the time of fabrication the drive mechanisms were assembled in the shop. However, since it was decided that actual operational tests prior to installation would be desirable, a program was initiated during November to disassemble the controls and reassemble them in Building 3001 with the lattice components added.

During disassembly, difficulty was encountered in removing two of the drive tubes, and scoring of the tubes resulted. After consultation with the ORR Project Group, it was decided to increase the diameter of the drive tube bearings. This work was performed at the Research Shops.

The reassembly of the drive mechanism is progressing as scheduled; however, delays were experienced in assembling the reactor components – the lower-bearing support plate, the grid plate and upper hold-down arms – because of modifications on the end boxes of the fuel and reflector units. Currently, the lattice components are being aligned.

Following the completion of the assembly, which will include the installation of the electrical connections and wiring arrangements, operational tests will be conducted.

Training of Personnel

Training of personnel for the operation of the ORR has continued. A technical group is being assembled which will handle problems encountered during the operation of the ORR and will perform reactor analysis functions.