FEB 2 7 1957

UNCLASSIFIED

CENTRAL RESEARCH LIBRARY
DOCUMENT COLLECTION

MARTIN MARIETTA ENERGY SYSTEMS LIBRARIES

3 4456 0350286 8

ORNL-2110
Engineering cy. 4

ANALYSIS AND DESIGN OF THE FROZEN SEAL

J. F. Bailey

LIBI

DO NOT

If you wi
send in
arrange a

OAK RIDGE NATIONAL LABORATORY
OPERATED BY
UNION CARBIDE NUCLEAR COMPANY
A Division of Union Carbide and Carbon Corporation
UCC
POST OFFICE BOX P · OAK RIDGE, TENNESSEE

UNCLASSIFIED

Printed in USA. Price 20 cents. Available from the

Office of Technical Services
U. S. Department of Commerce
Washington 25, D. C.

LEGAL NOTICE

This report was prepared as an account of Government sponsored work. Neither the United States, nor the Commission, nor any person acting on behalf of the Commission:

A. Makes any warranty or representation, express or implied, with respect to the accuracy, completeness, or usefulness of the information contained in this report, or that the use of any information, apparatus, method, or process disclosed in this report may not infringe privately owned rights; or

B. Assumes any liabilities with respect to the use of, or for damages resulting from the use of any information, apparatus, method, or process disclosed in this report.

As used in the above, "person acting on behalf of the Commission" includes any employee or contractor of the Commission to the extent that such employee or contractor prepares, handles or distributes, or provides access to, any information pursuant to his employment or contract with the Commission.

UNCLASSIFIED

ORNL-2110

Contract No. W-7405-eng-26

ANALYSIS AND DESIGN OF THE FROZEN SEAL

J. F. Bailey

DATE ISSUED

FEB 12 1957

OAK RIDGE NATIONAL LABORATORY
Operated by
UNION CARBIDE NUCLEAR COMPANY
A Division of Union Carbide and Carbon Corporation
Post Office Box P
Oak Ridge, Tennessee

UNCLASSIFIED

MARTIN MARIETTA ENERGY SYSTEMS LIBRARIES

3 4456 0350286 8

ORNL-2110
Engineering
TID-4500 (12th ed.)

INTERNAL DISTRIBUTION

1. C. E. Center
2. Biology Library
3. Health Physics Library
4-5. Central Research Library
6. Reactor Experimental Engineering Library
7-26. Laboratory Records Department
27. Laboratory Records, ORNL R. C.
28. A. M. Weinberg
29. L. B. Emlet (K-25)
30. J. P. Murray (Y-12)
31. J. A. Swartout
32. E. H. Taylor
33. E. D. Shipley
34. M. L. Nelson
35. S. C. Lind
36. F. L. Culler
37. G. E. Boyd
38. A. H. Snell
39. A. Hollaender
40. M. T. Kelley
41. K. Z. Morgan
42. J. H. Frye, Jr.
43. E. P. Blizard
44. C. P. Keim
45. R. S. Livingston
46. T. A. Lincoln
47. A. S. Householder
48. C. S. Harrill
49. C. E. Winters
50. D. W. Cardwell
51. E. M. King
52. A. J. Miller
53. D. D. Cowen
54. R. A. Charpie
55. J. A. Lane
56. S. J. Cromer
57. W. H. Jordan
58. J. P. Lane
59. J. F. Bailey
60. E. R. Dytko
61. A. P. Fraas
62. A. G. Grindell
63. J. J. Simon
64. W. L. Snapp
65. H. C. Young
66. W. G. Cobb
67. L. V. Wilson
68. P. M. Reyling
69. G. C. Williams
70. A. W. Savolainen
71. R. R. Dickison
72. M. J. Skinner
73-74. ORNL – Y-12 Technical Library, Document Reference Section

EXTERNAL DISTRIBUTION

75. Division or Research and Development, AEC, ORO
76-651. Given distribution as shown in TID-4500 (12th ed.) under Engineering category (200 copies – OTS)

CONTENTS

SUMMARY 1
INTRODUCTION 1
THEORETICAL ANALYSIS 1
Power Requirements 1
Leakage Rate 2
APPLICATION OF ANALYSIS 3
Power Considerations 4
Leakage Considerations 4
DESIGN CONSIDERATIONS 6
CLOSURE 9
NOMENCLATURE 9

ANALYSIS AND DESIGN OF THE FROZEN SEAL

J. F. Bailey[1]

SUMMARY

As a result of a theoretical analysis of an infinitely long frozen seal, an equation has been derived for relating the power required to drive the seal, the viscosity of the liquid being sealed, the shaft speed, and the dimensions of the seal.

The seal is expected to leak at a slow but steady rate. An equation is given for the volume leakage rate as a function of the viscosity of the liquid being sealed, the pressure difference across the seal, and the dimensions of the seal. Since it is possible that leakage from the seal may be prevented by surface tension effects, an equation is given for the maximum pressure difference without leakage as a function of surface tension and film thickness.

The theoretical analysis indicates that in order to keep power requirements and the leakage rates low the shaft diameter, shaft speed, pressure difference, seal length, and film thickness should be as small as practicable.

Because of the differences in physical properties some substances are easier to seal than others. For example, the analysis indicates that a frozen lead seal will be less difficult to operate than a frozen sodium seal.

With the theoretical analysis used as a basis, the procedure for designing a frozen seal is outlined. The various factors which enter into the design of a frozen seal are discussed. A frozen sodium seal for a pump is used as an example to show how to apply the theory for design purposes.

The small amount of experimental information available indicates that the frozen seal may be a satisfactory type of seal for certain applications. However, additional experimental information is needed for checking the validity of the theoretical analysis and for determining more completely the operating characteristics of this type of seal.

INTRODUCTION

A frozen seal is one in which the liquid, whose leakage is to be prevented, is frozen to form its own seal. In general appearance this seal is similar to a journal bearing. The shaft fits into a housing with a radial clearance of the same general magnitude as the radial clearance of a journal bearing. The housing or the shaft or both are cooled to a sufficiently low temperature that the liquid is frozen in the clearance.

Figure 1 shows schematically a short length of an infinitely long seal in which cooling takes place from the housing only. It is assumed that not all the material in the clear space is solid but that a thin liquid film exists between the shaft, which is turning, and the material which has frozen to the housing.

When the seal is in operation, power must be supplied through the shaft to shear the liquid film, and, if a steady state of equilibrium is to be maintained, the heat transfer rate out of this film must be equal to the power input. The total heat transferred from the seal will include any heat transferred in an axial direction through the shaft, the seal material, and the housing.

THEORETICAL ANALYSIS

Power Requirements

As will be evident later, the thickness of the liquid film is extremely small when compared with the radius of the shaft. Therefore it is assumed that the velocity gradient in the film is constant and that the shear stress may be expressed as

$$s = \mu \frac{2\pi RN}{t} , \tag{1}$$

where

s = shear stress, psi,
μ = absolute viscosity, lbf·min/in.[2] (see ref. 2),
R = shaft radius, in.,
N = shaft speed, rpm,
t = film thickness, in.

The power required to drive the seal is expressed as

$$\begin{aligned} P &= \tau(2\pi N) = s(2\pi RL)\, R\,(2\pi N) \\ &= 4\pi^2 s R^2 L N , \end{aligned} \tag{2}$$

where P = power, in.·lbf/min, τ = torque, lbf·in., and L = seal length, in. Combining Eqs. 1 and 2 gives

$$P = \frac{8\pi^3 \mu N^2 L R^3}{t} . \tag{3}$$

[1]Consultant, University of Tennessee.

[2]lbf = pound force.

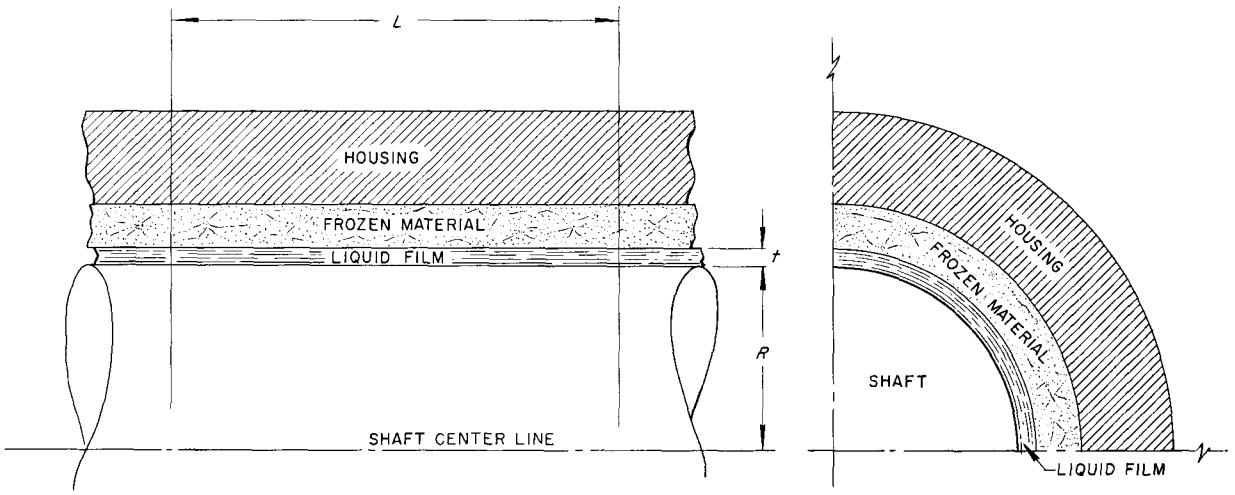

Fig. 1. A Short Length of an Infinitely Long Seal.

Equation 3 becomes

$$P = 1.41 \times 10^{-10}\, \mu N^2 D^3 \frac{L}{t}\,, \tag{4}$$

where P = power, w, μ = viscosity, centipoises, D = shaft diameter, in., and N, L, and t have the same units as above.

Leakage Rate

If the frozen seal exists as described above, then the liquid film adjacent to the shaft is a source of leakage. To obtain an expression for the leakage rate it is assumed that laminar flow occurs through the liquid film annulus. Figure 2*a* shows part of a cross section of a seal, and Fig. 2*b* is an axial section of the liquid annulus. A summation of the axial forces on the annular ring of fluid represented in Fig. 2*b* as being L long and $2r$ thick yields

$$(p_1 - p_2)\,(2\pi R)\,(2r) = 2s(2\pi R)\,L\,, \text{ since } r \ll R;$$

or

$$\Delta p = \frac{sL}{r}\,, \tag{5}$$

where p = pressure, psia, and r = radial distance from center line of liquid annulus, in. Since laminar flow is assumed,

$$s = -\mu \frac{du}{dr}\,,$$

where u = axial velocity of the fluid. Substituting this expression into Eq. 5 results in

$$\Delta p = -\frac{\mu L}{r}\frac{du}{dr}$$

or

$$du = -\frac{\Delta p}{\mu L}\, r\, dr\,.$$

Integrating the above expression and using the condition that $u = 0$ when $r = t/2$, the following expression for velocity is obtained:

$$u = \frac{\Delta p}{2L\mu}\left(\frac{t^2}{4} - r^2\right)\,. \tag{6}$$

The leakage rate may be found from

$$V = \int_{-t/2}^{t/2} u\,(2\pi R)\, dr\,. \tag{7}$$

Substituting for u from Eq. 6 and integrating results in

$$V = \frac{\pi R t^3 \Delta p}{6L\mu}\,, \tag{8}$$

where V = leakage rate, in.^{3}/min, and μ = viscosity, lbf·min/in.^{2}. Also

$$V = 2.55 \times 10^{12}\, \frac{\Delta p}{\mu}\, t^3 \frac{D}{L}\,, \tag{9}$$

where V = leakage rate, cc/day, and μ = viscosity, centipoises.

UNCLASSIFIED
ORNL-LR-DWG 14653

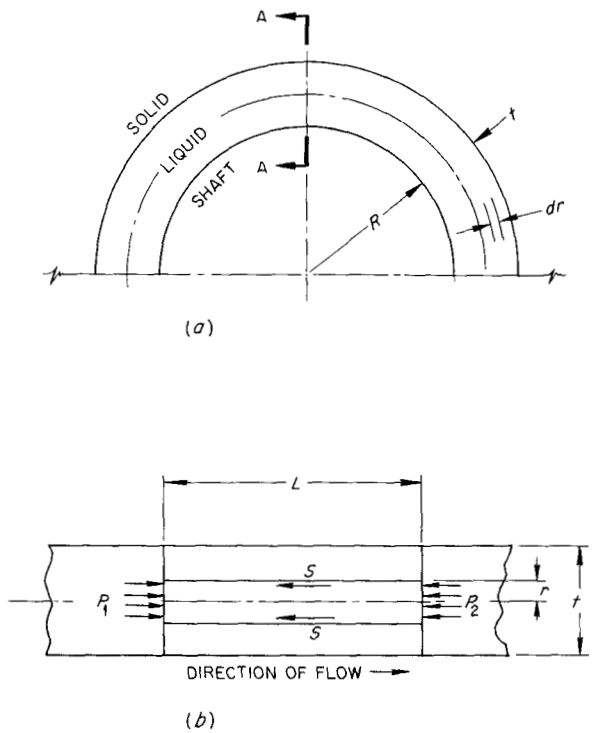

Fig. 2. Liquid Film Annulus. (*a*) Cross section of seal; (*b*) oxial section of liquid annulus.

UNCLASSIFIED
ORNL-LR-DWG 14654

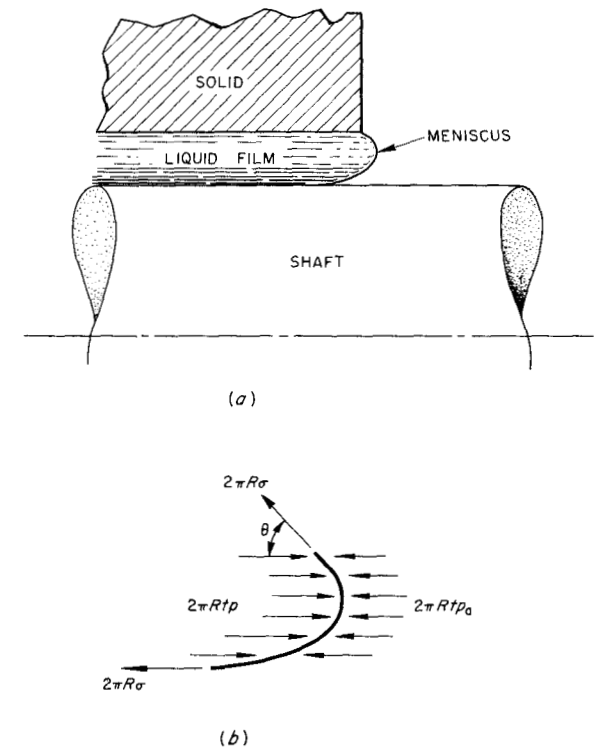

Fig. 3. Meniscus at Outer End of Seal. (*a*) Seal; (*b*) cross section of meniscus.

It is possible that because of surface tension there will be no leakage from the seal. (There will be leakage in the sense that evaporation will occur.) Figure 3*a* shows the outer end of a frozen seal in which the liquid film is held within the seal by surface tension. The shape of the meniscus and whether or not a stable meniscus is possible will depend on the value of the surface tension and on whether the liquid does or does not wet the solid surfaces. It appears that if the liquid wets the shaft a meniscus will not form and leakage will occur. On the other hand, if the liquid does not wet the shaft, a meniscus may form. Under the latter condition a cross section of the meniscus would probably appear as shown in Fig. 3*b*.

A summation of forces which act on the meniscus in an axial direction gives

$$2\pi Rtp = 2\pi Rtp_a + 2\pi R\sigma + 2\pi R\sigma \cos\theta$$

or

$$(10) \qquad p - p_a = \Delta p = (1 + \cos\theta)\frac{\sigma}{t},$$

where Δp = pressure difference across the seal, psi, σ = surface tension, lbf/in., and θ = an angle as shown in Fig. 3*b*. With θ = 45 deg, Eq. 10 becomes

$$(11) \qquad \Delta p = \frac{1.707\sigma}{t}.$$

Also

$$(12) \qquad \Delta p = 9.75 \times 10^{-6}\frac{\sigma}{t},$$

where σ = surface tension, dynes/cm.

APPLICATION OF ANALYSIS

Equation 4 may be written

$$(4a) \qquad \frac{P}{L} = 1.41 \times 10^{-10}\,\mu\frac{N^2D^3}{t}.$$

For sodium and lead, Eqs. 4, 9, and 12 become, respectively,

$$(4b) \qquad \frac{P}{L} = 0.99 \times 10^{-10}\frac{N^2D^3}{t},$$

$$(9a) \qquad V = 3.63 \times 10^{12}\, t^3 D \frac{\Delta p}{L} ,$$

$$(12a) \qquad \Delta p = \frac{20.15 \times 10^{-4}}{t} ,$$

$$(4c) \qquad \frac{P}{L} = 3.5 \times 10^{-10} \frac{N^2 D^3}{t} ,$$

$$(9b) \qquad V = 1.03 \times 10^{12}\, t^3 D \frac{\Delta p}{L} ,$$

$$(12b) \qquad \Delta p = \frac{43.3 \times 10^{-4}}{t} .$$

Power Considerations

Equation 4*b* relates the power requirements of a frozen sodium seal with shaft speed, shaft diameter, film thickness, and seal length. Since it is desirable to minimize the power required, the shaft speed and shaft diameter should be as small as practical. Figures 4 and 5 show graphically the effect of shaft speed and shaft size on the power required.

The curves in Figs. 4 and 5 also indicate that the lower speeds and smaller shaft sizes will give more sensitive seals. The sensitivity is reflected by the slope of the P/L vs t curves. At any particular film thickness, changes in film thickness per unit change in power occur to a greater extent with the smaller diameters and the slower speeds. In the operation of a frozen seal, fluctuations in cooling rate are inevitable and they result in changes in the film thickness. A decrease in cooling rate may produce a large enough increase in film thickness to start a leak or to increase the leakage to the extent that the seal will be destroyed. An increase in cooling rate may cause a reduction in film thickness sufficient to permit the rubbing of solid on solid and perhaps cause seizure. Therefore, from the standpoint of low power requirements, the shaft size and speed should be small; yet from the standpoint of a safe and stable seal these quantities should be large.

Inspection of Eq. 4*b* and Figs. 4 and 5 also indicate that the film thickness should be large in order to keep the power requirements low but that a small value of t is desirable for safety and stability. It is to be observed further that the seal length affects the power directly but is not involved in determining the sensitivity of the seal.

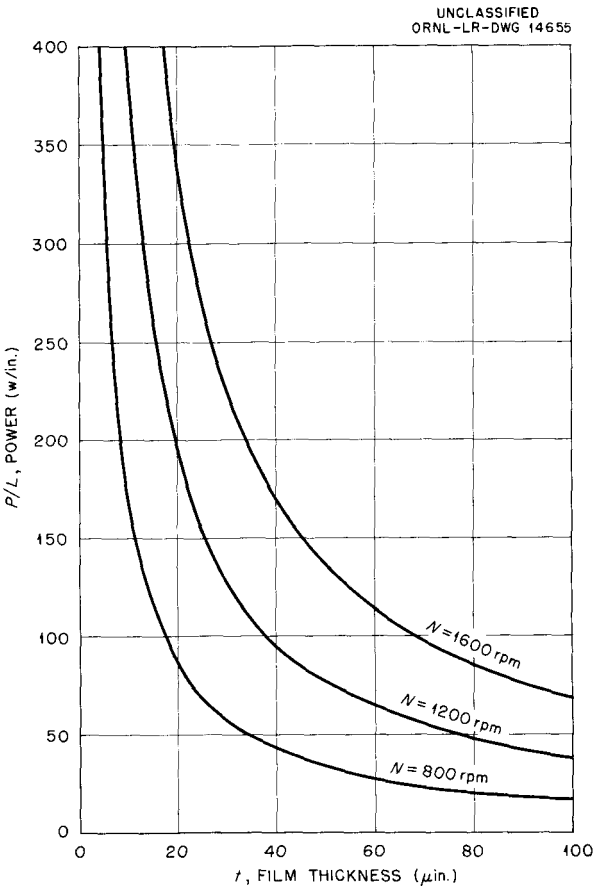

Fig. 4. Power vs Film Thickness for a Frozen Sodium Seal for D = 3 in., $P/L = 26.7 \times 10^{-10}\, N^2/t$, and N = 800, 1200, and 1600 rpm.

Based on the above analysis and from a power requirement standpoint only, the shaft speed and shaft size should be as small as the spplication will permit; the seal cooling rate should be as low as safety will permit; and the seal should be as short as is practical to build.

A comparison of the power requirements for lead and sodium is shown in Fig. 6. Because the viscosity of lead is greater at its melting point than the viscosity of sodium at its melting point, more power is needed to operate the frozen lead seal. However, a comparison of the slopes of the power curves indicates that the lead seal would be the easier to control.

Leakage Considerations

In analyzing the leakage from the seal, two possibilities were considered. In one case the leakage

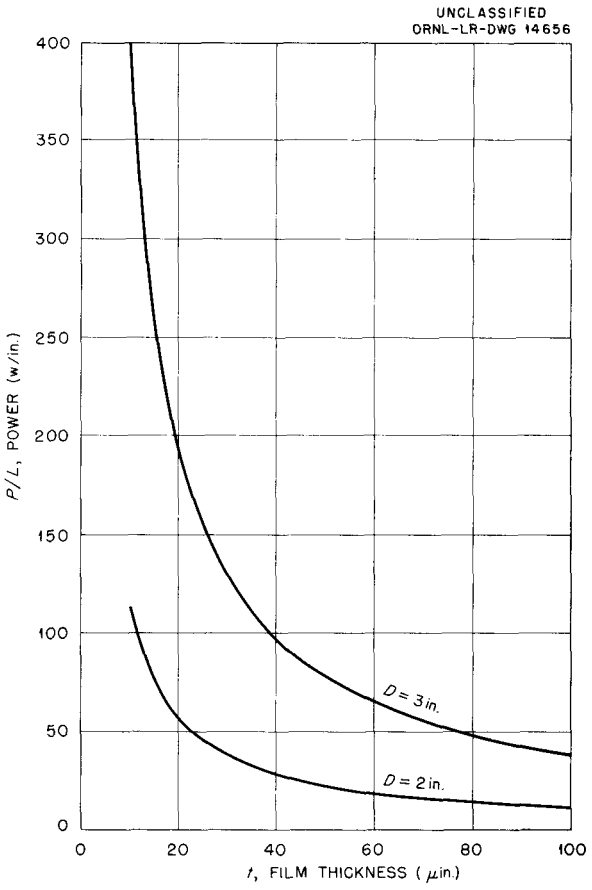

Fig. 5. Power vs Film Thickness for a Frozen Sodium Seal for N = 1200 rpm, $P/L = 1.43 \times 10^{-4}$ D^3/t, and D = 2 and 3 in.

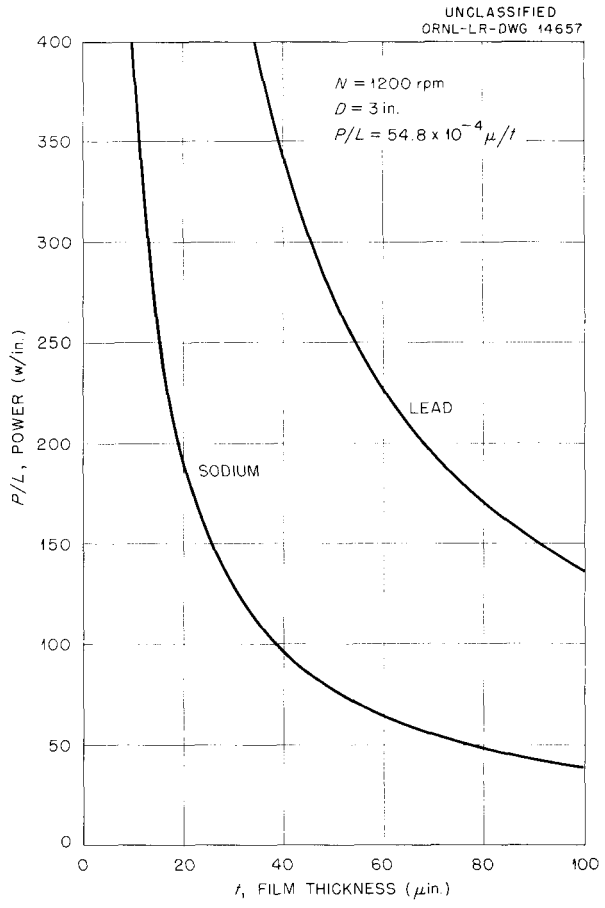

Fig. 6. Power vs Film Thickness for a Frozen Sodium Seal and for a Frozen Lead Seal.

rate was based on laminar flow through an annulus; in the other the surface tension was considered as being able to prevent leakage. The first of these seems to be the more logical and will be considered first.

Equation 9*a* expresses the leakage rate as a function of film thickness, shaft diameter, pressure difference, and seal length; and for a 3-in.-dia seal Fig. 7 shows graphically how the leakage rate varies with pressure difference per unit length and with film thickness. From Eq. 9*a* it may be observed that the film thickness, the pressure difference, and the D/L ratio should be small to prevent excessive leakage.

In the event that wetting of the shaft does not occur and a stable meniscus forms, Eq. 12 and Fig. 8 are applicable. They relate the pressure difference and the maximum value of film thickness which will prevent leakage.

Considering both the power requirement and the leakage rate, it is desirable to have the shaft diameter, the shaft speed, and the pressure difference as small as practical for the particular application.

The film thickness should be large to keep the power required small but should be small to prevent large leakage rates. Just the opposite is true for the seal length; the seal should be short for low power and long for small leakage. However, it is believed that both the film thickness and the seal length should also be made small.

Certain practical considerations limit the extent to which L and t may be reduced. As L is made smaller, the coolant passage in the seal housing must become smaller, and it would be unwise to restrict the coolant passage to the point where there is danger of clogging it. It is equally undesirable to reduce t to where there is danger of

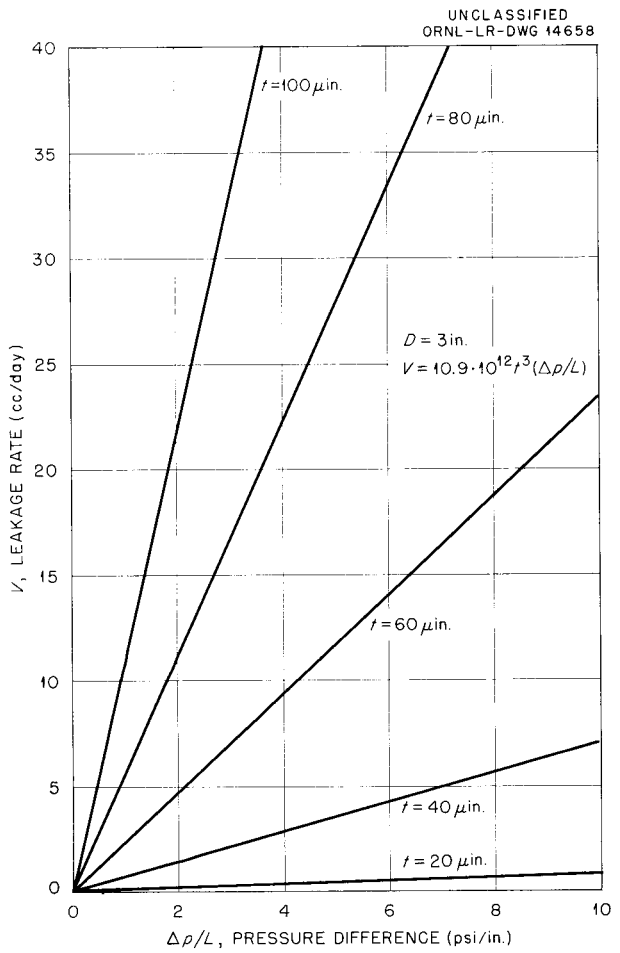

Fig. 7. Leakage Rate vs Pressure Difference for a Frozen Sodium Seal.

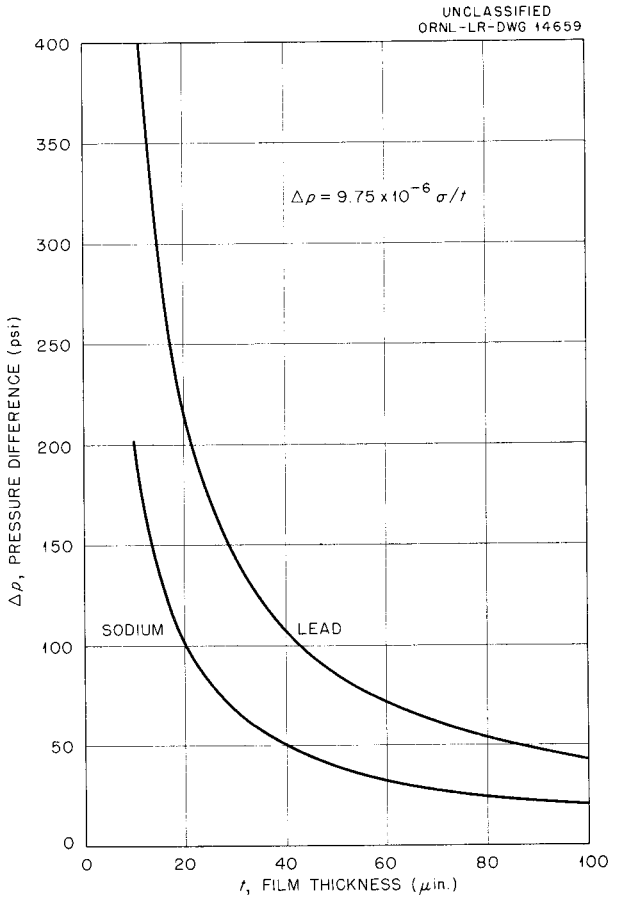

Fig. 8. Limiting Pressure Difference vs Film Thickness for a Frozen Sodium Seal and for a Frozen Lead Seal.

solid-to-solid rubbing in the seal. This limiting value of t will be established by the surface roughness of the shaft and of the frozen seal material.

Because of differences in physical properties (mainly the surface tension and viscosity) some substances appear to be easier to seal than others. Figures 8 and 9 compare the leakage characteristics of sodium and lead. For the case of no leakage Fig. 8 shows that for a given value of film thickness the lead seal will stand a greater pressure difference than the sodium seal. For the case in which leakage may occur Fig. 9 indicates that the sodium leakage rate will be greater than the lead leakage rate for the same value of $\Delta p/L$. Thus, regardless of which concept of the leakage problem is correct, the lead seal will be easier to operate than the sodium seal.

DESIGN CONSIDERATIONS

The choice of many of the factors which describe a frozen seal is determined by considerations other than the operation of the seal. The material to be sealed, the shaft speed, the shaft diameter, and the pressure difference will, in general, be fixed by the particular application. For example, if the seal were for a pump, the speed and pressure difference would be determined by the desired pump characteristics and the shaft size would be established from strength and rigidity considerations. Where some choice in the magnitude of these factors exists, seal considerations show that all should be as small as practical.

As an example, let it be assumed that for a frozen sodium seal

$$N = 1200 \text{ rpm} ,$$

$$D = 3 \text{ in.} ,$$

$$\Delta p = 2 \text{ psi} .$$

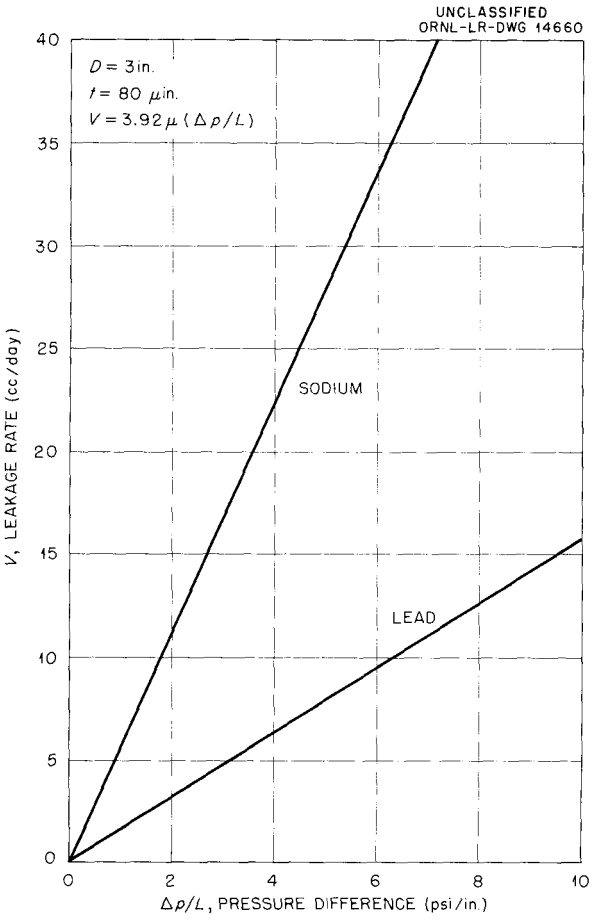

Fig. 9. Leakage Rate vs Pressure Difference for a Frozen Sodium Seal and for a Frozen Lead Seal.

For this seal Eqs. 4*b*, 9*a*, and 12*a* become

$$\frac{P}{L} = \frac{38.5 \times 10^{-4}}{t} , \tag{4d}$$

$$V = 2.18 \times 10^{13} \frac{t^3}{L} , \tag{9c}$$

$$\Delta p = \frac{20.15 \times 10^{-4}}{t} . \tag{12c}$$

Accepting the fact that leakage will occur, it is necessary to establish an acceptable limit for the leakage rate. For purposes of this example it is assumed that 20 cc/day is the maximum permissible rate. Then Eq. 9*c* becomes

$$L = 1.09 \times 10^{12} t^3 . \tag{13}$$

In selecting a value for t it is necessary to consider the surface roughness and the hardness of both the shaft and the frozen seal material. For a stainless steel shaft and with sodium or lead as the seal material, the minimum film thickness should be about 100 μin. This would require that the shaft have an rms surface roughness of at least 16 μin. It is assumed that the frozen surface would have a roughness of 16 μin. (equivalent to a good precision-cast surface). Since the high peaks run from three to five times the rms value, it appears that the film thickness should be between 96 μin. (2 × 16 × 3) and 160 μin. (2 × 16 × 5). Since both sodium and lead are soft compared with the steel shaft, it is believed that a value of 100 μin. should be used.

If sodium does not wet the shaft and leakage does not occur, Eq. 12*c* applies, and it shows that for a t of 100 μin. the seal will constrain a Δp of 20 psi. Since this value is greater than the 2 psi required, the seal will be sized on the basis of the controlled leakage of 20 cc/day.

For t = 100 μin. Eq. 13 indicates that L should be 1.09 in.; a length of 1 in. will be used. Using Eq. 13 to eliminate t from Eq. 4*d* gives

$$P = 39.6\, L^{2/3} = 39.6\, w .$$

The heat transfer from the seal must be the energy dissipated in the seal, which is 135 Btu/hr (39.6 × 3.413), plus the heat transferred to the seal from the shaft and housing.

The cooling system should be in two parts: a circuit for the seal itself and an auxiliary circuit. The purpose of the auxiliary circuit is to cool the seal material, the housing, and the shaft from the operating temperature to within a few degrees of the melting point of the seal material. The amount of auxiliary cooling required will depend in part on the temperature of the fluid in the pump. The rate of cooling required of the seal coolant circuit is only slightly greater than the rate at which energy is dissipated in the seal (135 Btu/hr).

One concept of the frozen seal is shown schematically in Fig. 10. The seal, which is on the right, has a length, L, and fits around the shaft with a radial clearance, c. The value of c should be large enough to permit assembly and to allow for differential expansion. But, it should be kept small so that the amount of frozen material required to form the seal will be kept to a minimum.

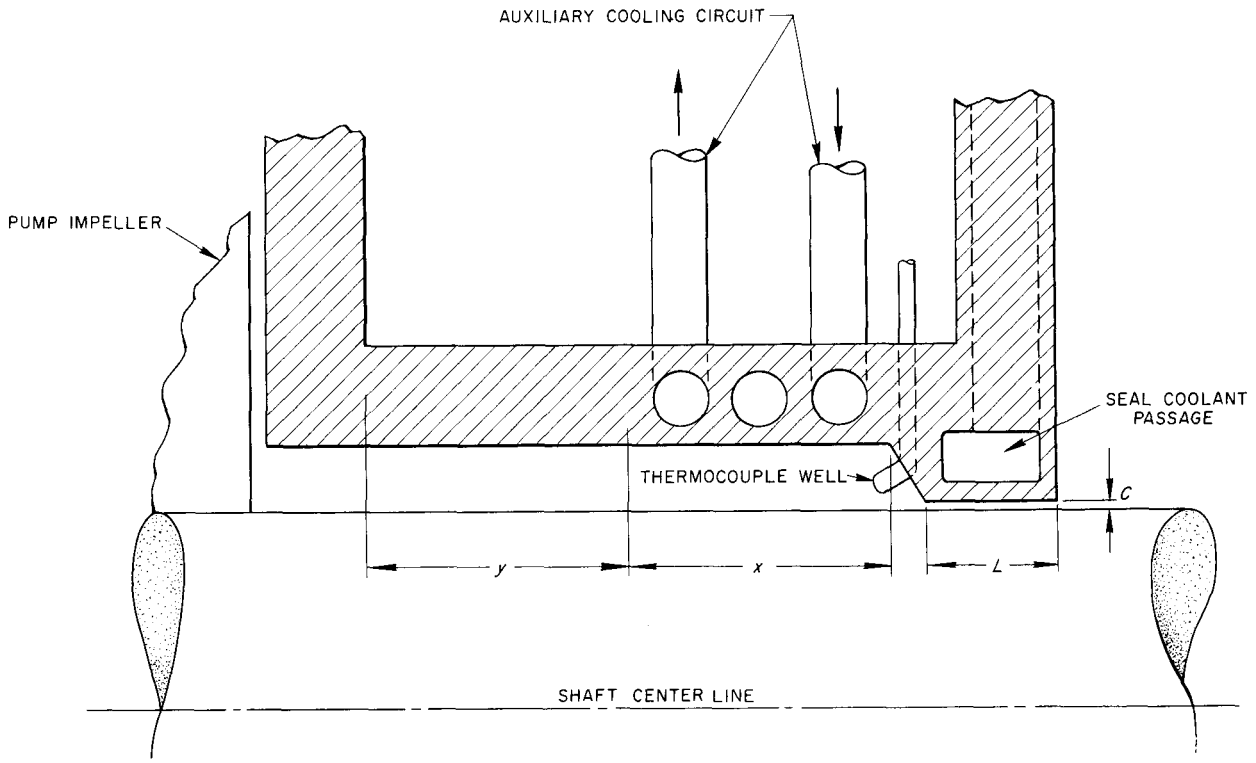

Fig. 10. Schematic Diagram of a Frozen Seal.

A reasonable value is about four times the radial clearance of a journal bearing having the same diameter, or

$$c = 0.002D + 0.004$$
$$= 0.006 + 0.004 = 0.01 \text{ in.}$$

The seal coolant (probably water) makes a single pass which is as near 360 deg of the housing circumference as practical. The auxiliary coolant (also probably water) is shown (in Fig. 10) making two helical passes around the housing. The flow rate and/or inlet temperature of the auxiliary coolant are controlled by the thermocouple located in the liquid seal material immediately ahead of the seal. The regulation should be such that at the thermocouple the seal material is cooled to within 10 to 20°F of the melting point. For the sodium seal this would be 218 to 228°F; 220°F is assumed.

The clearance between the shaft and that part of the housing which contains the auxiliary cooling circuit is relatively large in order to minimize the power required and to provide a reservoir of relatively cool seal material. The latter will make it easier to restore the seal to normal should an excessive leak occur.

It was mentioned that the auxiliary cooling rate is dependent upon the temperature of the fluid being pumped. It is also dependent on the value of the dimension y. If y is small, the cooling load will be high; the larger y is made, the smaller the cooling requirements will be. A practical limit as to how large y can be exists because the amount by which the pump impeller overhangs the bearing increases as y increases.

A reasonable balance between bearing overhang and cooling rate is obtained by making $x + y$ as large as bearing overhang considerations will permit and by making $x = y$. For the seal in Fig. 10 $x = y = 2$ in.; assuming an operating temperature of 1000°F, the auxiliary cooling rate is 9850 Btu/hr.

The results of the foregoing discussion are summarized below. The following were assumed:

Application	seal for a pump
Material pumped	sodium
Shaft speed	1200 rpm
Shaft diameter	3 in.
Pressure difference across seal	2 psi
Maximum allowable leakage rate	20 cc/day
Temperature of sodium in pump	1000°F
Temperature immediately preceding seal	220°F

The following were determined by analysis:

Film thickness desired	100 μin.
Seal length	1 in.
Power to drive seal	40 w
Radial clearance	0.01 in.
Length of uncooled approach section	2 in.
Length of cool approach section	2 in.
Heat transfer from seal	135 Btu/hr
Auxiliary cooling heat transfer	9850 Btu/hr

CLOSURE

The theory presented has not been verified experimentally. However, there are meager bits of experimental information[3] which indicate that there is a tendency for the seal to behave as the theory predicts. Experience has shown that a frozen seal may leak slowly and steadily or that it may operate for many hours without leaking and then suddenly leak at a high rate for a short time. It is of interest to note that the amount of leakage occurring during these short-duration, high-flow-rate periods is about the same as the amount that would be expected to leak out slowly and steadily during the same total time; the total time is the period of no leakage plus the period of high leakage rate.

As might be expected, the greatest operational difficulties arise during the startup period. If insufficient cooling is provided, the seal will not be established; on the other hand, if too much cooling is provided, the shaft will freeze tight.

During the operation of the seal there is a tendency to over-cool, which increases the power required to drive the seal. This is not serious when the frozen seal material is soft, such as sodium or lead. However, if the frozen seal material is hard, it will cut into the shaft and destroy the shaft and the seal. For materials of this type it would be better to freeze from both the hub and the shaft so that any attrition taking place would occur between two layers of the seal material.

There are indications that a frozen type of seal is suitable for certain applications; however, some difficulty has been encountered in operating and maintaining this type of seal. In order to determine the practicability of the frozen seal and in order to verify or disprove the theory outlined above, an experimental investigation is needed. This investigation should be conducted specifically for obtaining information about the frozen seal and not as a part of another experimental project. It is particularly important that the nature of the leakage be determined. It should be determined whether a stable meniscus can be formed so that leakage can be eliminated or whether leakage will occur at a controlled rate.

NOMENCLATURE

c = radial clearance
D = shaft diameter
N = shaft speed
P = power
p = pressure
Δp = pressure difference
R = shaft radius
r = radial distance
s = shear stress
t = film thickness
u = axial velocity of fluid
V = volume leakage rate
x = a length
y = a length
θ = an angle
μ = absolute viscosity
σ = surface tension
τ = torque
L = seal length

[3] J. W. Mausteller (ed.), *Progress Report 22 for April and May 1954*, Mine Safety Appliance Company, NP-5221.