[redacted]

CRL
CENTRAL RESEARCH LIBRARY
DOCUMENT COLLECTION

# AEC RESEARCH AND DEVELOPMENT REPORT

ORNL-2335 cy. 4
Chemistry–Separation Processes for Plutonium and Uranium

MARTIN MARIETTA ENERGY SYSTEMS LIBRARIES
3 4456 0350507 1

Classification Cancelled
Or Changed To
By Authority Of TID 7513 Date 12/1/71
By G. Gallegos

## ORNL METAL RECOVERY PLANT ACTIVITIES DURING FY 1956

J. M. Chandler
W. H. Lewis

CENTRAL RESEARCH LIBRARY
DOCUMENT COLLECTION
LIBRARY LOAN COPY
DO NOT TRANSFER TO ANOTHER PERSON
If you wish someone else to see this document, send in name with document and the library will arrange a loan.

This document contains Confidential Restricted Data relating to Civilian Applications of Atomic Energy.

OAK RIDGE NATIONAL LABORATORY
OPERATED BY
UNION CARBIDE NUCLEAR COMPANY
A Division of Union Carbide and Carbon Corporation
UCC
POST OFFICE BOX X · OAK RIDGE, TENNESSEE

[redacted]

Printed in USA. Charge 40 cents. Available from the U. S. Atomic Energy Commission, Technical Information Extension, P. O. Box 1001, Oak Ridge, Tennessee. Please direct to the same address inquires covering the procurement of other classified AEC reports.

**LEGAL NOTICE**

This report was prepared as an account of Government sponsored work. Neither the United States, nor the Commission, nor any person acting on behalf of the Commission:

A. Makes any warranty or representation, express or implied, with respect to the accuracy, completeness, or usefulness of the information contained in this report, or that the use of any information, apparatus, method, or process disclosed in this report may not infringe privately owned rights; or

B. Assumes any liabilities with respect to the use of, or for damages resulting from the use of any information, apparatus, method, or process disclosed in this report.

As used in the above, "person acting on behalf of the Commission" includes any employee or contractor of the Commission to the extent that such employee or contractor prepares, handles or distributes, or provides access to, any information pursuant to his employment or contract with the Commission.

[redacted]

ORNL-2335

Copy No. 4

CHEMICAL TECHNOLOGY DIVISION

Contract No. W-7405-Eng-26

# ORNL METAL RECOVERY PLANT ACTIVITIES DURING FY 1956

by

J. M. Chandler
W. H. Lewis

Work Performed by:

G. D. Davis
C. D. Hylton
J. F. Lockmiller
J. L. Matherne
D. E. Spangler
D. H. Summers
W. R. Whitson

Date Issued: AUG 13 1957

OAK RIDGE NATIONAL LABORATORY
Operated by
UNION CARBIDE NUCLEAR COMPANY
A Division of Union Carbide and Carbon Corporation
Post Office Box X
Oak Ridge, Tennessee

[redacted]

[redacted]

MARTIN MARIETTA ENERGY SYSTEMS LIBRARIES

3 4456 0350507 1

## INTERNAL DISTRIBUTION

1. C. E. Center
2. Biology Library
3. Health Physics Library
4-5. Central Research Library
6. Reactor Experimental Engineering Library
7-11. Laboratory Records Department
12. Laboratory Records, ORNL R.C.
13. A. M. Weinberg
14. L. B. Emlet (K-25)
15. J. P. Murray (Y-12)
16. J. A. Swartout
17. E. H. Taylor
18. E. D. Shipley
19-20. F. L. Culler
21. M. L. Nelson
22. W. H. Jordan
23. C. P. Keim
24. J. H. Frye, Jr.
25. S. C. Lind
26. A. H. Snell
27. A. Hollaender
28. K. Z. Morgan
29. M. T. Kelley
30. T. A. Lincoln
31. R. S. Livingston
32. A. S. Householder
33. C. S. Harrill
34. C. E. Winters
35. D. W. Cardwell
36. D. Phillips
37. W. K. Eister
38. F. R. Bruce
39. D. E. Ferguson
40. R. B. Lindauer
41. H. E. Goeller
42. R. A. Charpie
43. J. A. Lane
44. M. J. Skinner
45. R. E. Blanco
46. G. E. Boyd
47. W. E. Unger
48. R. R. Dickison
49. A. T. Gresky
50. E. D. Arnold
51. C. E. Guthrie
52. J. W. Ullmann
53. K. B. Brown
54. K. O. Johnsson
55. H. M. McLeod
56. C. W. Hancher
57. J. C. Bresee
58. W. W. Weinrich (consultant)
59. M. D. Peterson (consultant)
60. D. L. Katz (consultant)
61. G. T. Seaborg (consultant)
62. M. Benedict (consultant)
63. C. E. Larson (consultant)
64. L. Squires (consultant)
65. J. H. Rushton (consultant)
66. W. H. Lewis
67. R. E. Brooksbank
68. J. L. Matherne
69. ORNL - Y-12 Technical Library, Document Reference Section

## EXTERNAL DISTRIBUTION

70. Division of Research and Development, AEC, ORO
71-254. Given distribution as shown in M-3679 (19th ed.) under Chemistry-Separation Processes for Plutonium and Uranium

[redacted]

[redacted]



CONTENTS


| | | Page |
|---|---|---|
| 1.0 | Abstract | 1 |
| 2.0 | Introduction | 2 |
| 3.0 | Process Outline | 3 |
| 4.0 | Building Description | 4 |
| 5.0 | Program Results During Fiscal Year 1956 | 6 |
| 5.1 | ORNL Program | 6 |
| 5.1.1 | Process Description and Results | 6 |
| 5.1.2 | Decontamination Factor and Product Purity | 11 |
| 5.2 | Special Plutonium Separation Programs | 14 |
| 5.2.1 | Feed Preparation | 14 |
| 5.2.2 | Solvent Extraction | 15 |
| 5.2.3 | Plutonium Product | 16 |
| 5.2.4 | Uranium Product | 16 |
| 5.3 | Brookhaven National Laboratory Reactor Fuel Processing (BNL) | 16 |
| 5.3.1 | Process Description | 16 |
| 5.3.2 | Plutonium Product Purity | 21 |
| 5.4 | Chalk River Tank Car Program | 23 |
| 5.4.1 | Feed Preparation | 23 |
| 5.4.2 | Solvent Extraction | 24 |
| 5.4.3 | Uranium Product | 26 |
| 5.4.4 | Neptunium Recovery | 27 |
| 5.5 | Argonne National Laboratory Reactor Fuel Processing | 28 |
| 5.5.1 | Feed Preparation | 28 |
| 5.5.2 | Solvent Extraction | 29 |
| 5.5.3 | Plutonium Product | 31 |
| 5.5.4 | Uranium Product | 31 |
| 5.5.5 | Uranium Product from ANL CP-2 Fuel Processing | 32 |
| 6.0 | Operational Cost and Man-Power Requirements | 33 |
| 7.0 | Appendix | 35 |
| 7.1 | Equipment Flowsheet | 35 |
| 7.2 | Chemical Flowsheet | 35 |
| 7.3 | Column Data | 35 |
| 7.4 | Methods of Counting and Calculating Activities | 40 |
| 7.4.1 | Counting Methods | 40 |
| 7.4.2 | Method of Calculation | 40 |


[redacted]

[redacted]

## 1.0 ABSTRACT

During the period July 1, 1955 to July 1, 1956 the Metal Recovery Plant was engaged in seven programs in which four distinct types of irradiated reactor fuels were processed by solvent extraction to recover 115 tons of uranium, 9.8 kg of plutonium, and 30 g of $Np^{237}$. The overall recovery of uranium and plutonium was 99.0 and 98.6 per cent, respectively. Fuels were processed from the ORNL Graphite, BNL, Argonne CP-2 and CP-3, and the Canadian NRX reactors. Approximately 19.7 tons of uranium and 30 g of $Np^{237}$ was recovered from 2.0 M uranyl nitrate solution received from the AECL. Simultaneously with the radiochemical separation which produced purified products, chemical and equipment flowsheets were demonstrated for continuous processing of aluminum-clad uranium slugs, uranium dioxide shapes, and plutonium-aluminum alloy slugs. Aluminum-clad irradiated natural uranium slugs and uranium dioxide shapes were dissolved continuously in nitric acid to produce feed for solvent extraction. Plutonium-aluminum alloy slugs were dissolved in batches with 6 M $HNO_3$ containing 0.05 M $Hg(NO_3)_2$ as catalyst. Feed gross $\beta$ activity levels ranged from $10^4$ to $10^9$ c/m/ml and gross $\gamma$ from $10^4$ to $5.6 \times 10^9$ c/m/ml. Two-cycle gross $\beta$ decontamination factors ranged from $10^3$ to $5 \times 10^4$ and gross $\gamma$ from $1 \times 10^3$ to $8 \times 10^5$.

The basic chemical flowsheet for solvent extraction was a Purex type, in which the salting agent was nitric acid and the solvent was 30 per cent tributyl phosphate in a kerosene diluent. For a given feed type the chemical flowsheet was established which gave the desired separation and decontamination of uranium and plutonium. The neptunium recovery flowsheet was a modified Purex type which used low uranium saturation in the solvent for neptunium extraction and a low acid concentration for neptunium stripping. The neptunium-uranium partitioning was by solvent extraction, and the neptunium-plutonium partitioning was effected by both solvent extraction and ion exchange.

The spent solvent was continuously regenerated for reuse by washing with sodium carbonate and dilute nitric acid in pulsed column equipment.

A waste acid recovery flowsheet was demonstrated which recovered 70 per cent of the recoverable acid, recycling to the dissolver all the uranium and plutonium present in the second cycle acid raffinate streams.

[redacted]

Two lots of highly irradiated plutonium containing 14 and 30 per cent $Pu^{240}$, respectively, were processed for the Y-12 Special Separations Group. One lot was recovered from NRX-irradiated natural uranium slugs and the other from NRX-irradiated plutonium-aluminum alloy slugs.

The uranyl nitrate product solutions containing an average of 410 g of uranium per liter and 0.5 M nitric acid were shipped to Y-12 for conversion to $UO_3$. The plutonium nitrate product solutions containing an average of 35 g of plutonium per liter, were shipped to Rocky Flats.

The plant was operated at an annual cost of $693,000. This cost includes charges for labor, materials, and overhead by all groups supporting the operation of the plant.

## 2.0 INTRODUCTION

The ORNL Metal Recovery Plant is a versatile solvent extraction radiochemical separations plant which has been in operation since April, 1952. It has been operated to produce purified uranium and plutonium products simultaneously with the development and demonstration of solvent extraction techniques and engineering applications for processing various types of irradiated reactor fuels and fuel cycle wastes.

This report covers the ORNL Metal Recovery Plant activities for the fiscal year July 1, 1955 to July 1, 1956.

## 3.0 PROCESS OUTLINE

A schematic drawing of the equipment flowsheet is given in Fig. 7-1. This flowsheet shows the continuous dissolving equipment; two cycles of solvent extraction equipment with continuous between-cycle feed adjustment for both the plutonium and uranium second cycles; the continuous resin column isolation equipment for plutonium; the continuous evaporation of uranium product solutions; and the equipment for continuous recovery of waste acid and spent solvent. For a given type of irradiated fuel, the equipment flowsheet was altered to include any portion of the above flowsheet, depending on the fuel type and radiation history.

All irradiated feed materials were converted to a nitrate solution for processing through the solvent extraction equipment. Pulsed column contactors with perforated plates were used to contact the organic and aqueous phases and thus effect the radiochemical separations. The organic solvent contained 30 vol per cent tributyl phosphate and 70 vol per cent Amsco, a kerosene-type diluent. The aqueous-phase composition was dictated by the chemical flowsheet being used. However, the basic chemical flowsheet was of the Purex type[1] in which nitric acid was used as the salting agent and trivalent plutonium was separated from uranium. The uranyl nitrate product solution was concentrated by evaporation and the plutonium nitrate product was concentrated by cation exchange. Spent solvent was continuously washed with carbonate solution in a pulsed column and recycled to the extraction columns for reuse.

---

[1] ORNL-1519.

## 4.0 BUILDING DESCRIPTION

The Metal Recovery Plant processing cells are housed in a simply constructed frame building 91 ft long, 60 ft wide, and 24 ft high. Figure 4-1 is floor plan of the plant. The six 8- by 8- by 21-ft high cells contain the solvent extraction columns and associated equipment, and the 24- by 18- by 22-ft high cell contains two 2400-gal feed tanks and a 2400-gal plant waste tank. The large cell and one of the smaller cells have 2-ft-thick concrete walls for shielding, and the remaining five small cells have 8-in.-thick concrete walls surrounding them.

The roof is made of a thin layer of metal supporting a 2-in.-thick pad of insulation which is coated with tar and gravel.

The nonradioactive chemical makeup area, the uranium product withdrawal and packaging area, offices, wash rooms, and control room occupy about 75 per cent of the building floor area and are located adjacent to the processing cells. Radioactive solutions are sampled at stations on a sample balcony, which is separated from the main operating area by the processing cells. A 6- by 40- by 10-ft deep water filled storage canal and a covered 10- by 10- by 10-ft deep dissolver pit are located outside and adjacent to the main building structure.

ORNL-LR-DWG: 7412
UNCLASSIFIED

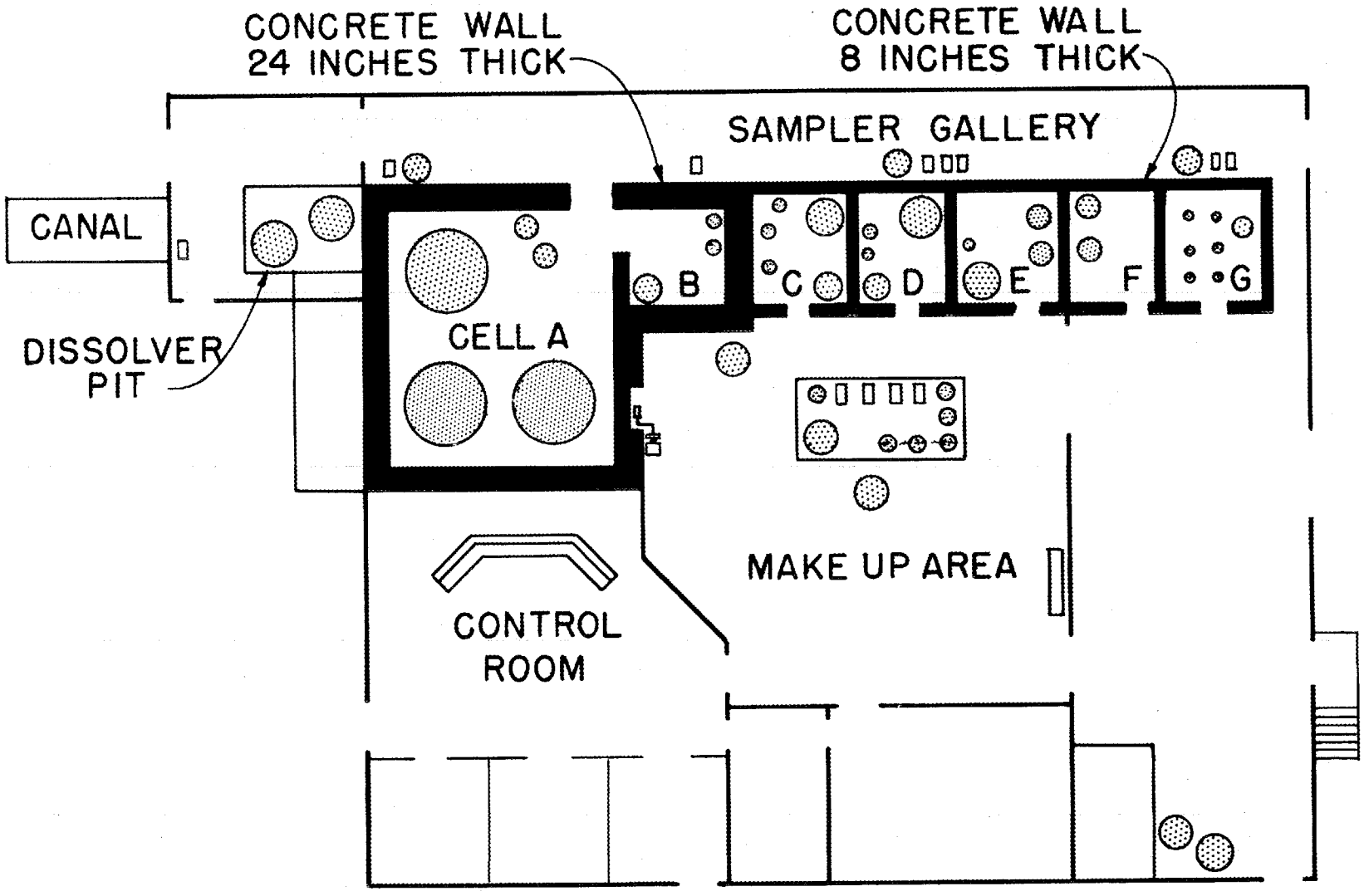


FIG. 4-1. METAL RECOVERY PLANT, PLAN

# 5.0 PROGRAM RESULTS DURING FISCAL YEAR 1956

## 5.1 ORNL Program

The recovery of 60.25 tons of uranium and 6.6 kg of plutonium from irradiated slugs discharged from the ORNL Graphite Reactor in mid 1952 was begun in July, 1955 and ended in December, 1955. The irradiation level of the uranium slugs ranged from 0 - 300 Mwd per ton and averaged 125 Mwd/ton. Uranium and plutonium losses for the program were 0.9 and 1.1 per cent, respectively. The plant on-stream efficiency was 96 per cent and the uranium throughput averaged 904 lb per operating day.

The following chemical and equipment flowsheet innovations were evaluated during the program:

1. Continuous nitric acid dissolution of the aluminum-jacketed slugs.
2. Dissolution of slugs in acid waste, containing ions of sodium, iron, and sulfate, from the uranium and plutonium second-cycle extraction columns.
3. The use of specific gravity measurements for automatic adjustment of nitric acid concentrations in scrub streams (IAS and IDS) and plutonium second-cycle feed adjustment (IIAF).
4. Airlift pumping of waste acid and evaporator concentrate.

### 5.1.1 Process Description and Results

A modified Purex process chemical flowsheet (Figs. 7-2 through 5) was used to process the ORNL Graphite Reactor irradiated fuel elements. This process consisted of the following steps:

1. Continuous dissolution of fuel elements in recycle waste nitric acid (8.5 M $HNO_3$) containing 0.005 M $Hg(NO_3)_2$ to obtain a uranyl nitrate solution.
2. Decontamination and separation of uranium and plutonium by a three-cycle solvent-extraction process.
3. Isolation of the plutonium by an ion-exchange process.
4. Continuous solvent recovery.
5. Continuous recovery of nitric acid from extraction-column aqueous raffinate wastes.

Fuel Dissolution and Feed Preparation. The ORNL Graphite Reactor fuel elements, 1-in.-dia. cylinders, 4 in. long, contained 1166 g of uranium clad with 27 g of aluminum. Sixteen fuel elements per hour were injected into the dissolver from the storage canal by an air-operated ram. The slugs were fed to the 500-gal dissolver, containing 250 gal of solution (approximately 2.0 M $HNO_3$, 1.4 M U, 0.28 M Al, 0.2 M Na, 0.08 M Fe, 0.005 M Hg) and about 1100 lb of uranium metal heel. Recycle waste acid (containing 8.5 M $HNO_3$, 0.005 M $Hg(NO_3)_2$, and ions of iron, sodium, and sulfate), flowed to the dissolver as demanded by a liquid level controller. Dissolver solution was pumped continuously from the dissolver to feed surge tanks.

Approximately 4.5 moles of nitric acid was required per mole of uranium dissolved. Uranium dissolution rates varied from 220 to 1400 lb/day, averaging 900 lb/day. The capacity of the dissolver off-gas system limited the dissolution rate to 1400 lb/day.

The average composition of the solution pumped from the dissolver is presented in Table 5-1. Compositions of individual batches of feed are given in Table 5-2. In most cases no adjustment of feed was required prior to solvent extraction.

Table 5-1. Average Composition of Feed Solution

| Constituent | Conc., M | Fission Products | Activity, c/m/ml[a] |
|---|---|---|---|
| U | 1.345 | Gross β | $1.4 \times 10^8$ |
| $HNO_3$ | 1.87 | Gross γ | $1.1 \times 10^8$ |
| Al | 0.25 | Pu α | $5.5 \times 10^6$ |
| Fe | 0.08 | Ru γ | $2.9 \times 10^6$ |
| Na | 0.20 | Zr-Nb γ | $6.6 \times 10^4$ |
| Hg | 0.005 | TRE β | $6.0 \times 10^7$ |
| | | Cs γ | $8.9 \times 10^7$ |

[a]For 200-250 Mwd/ton feed. See Sec. 7.4 for counting methods.

Table 5-2. Average Compositions of Feeds According to Irradiation Levels

| Irradiation Level, Mwd/ton | U, g/liter | $HNO_3$ M | Activity, c/m/ml | | | | | |
|---|---|---|---|---|---|---|---|---|
| | | | Gr β | Gr γ | Ru γ | Zr-Nb γ | TRE β | Cs γ |
| 0-50 | 339.5 | 1.77 | $1.2x10^7$ | $7.2x10^6$ | $2.4x10^5$ | $4.8x10^6$ | $1.5x10^6$ | $6.4x10^6$ |
| 50-100 | 329.5 | 1.53 | $7.3x10^7$ | $4.2x10^7$ | $2.6x10^6$ | $1.7x10^7$ | $3.1x10^7$ | $1.4x10^7$ |
| 100-150 | 309.0 | 2.33 | $7.6x10^7$ | $5.2x10^7$ | $2.2x10^6$ | $1.7x10^7$ | $2.7x10^7$ | $4.3x10^7$ |
| 150-200 | 322.5 | 2.28 | $1.1x10^8$ | $8.1x10^7$ | $2.0x10^6$ | $3.6x10^7$ | $5.5x10^7$ | $6.4x10^7$ |
| 200-250 | 329.5 | 1.40 | $1.4x10^8$ | $1.1x10^8$ | $2.9x10^6$ | --- | $6.0x10^7$ | $8.9x10^7$ |

First Solvent-Extraction Cycle. The uranyl nitrate solution from the dissolver was fed to the extraction column (IA) of the first cycle at an average rate of 15.1 gal/hr. In this column, where the scrub/feed/extractant ratio was 1/1.5/6 and the total velocity was 365 gal/hr/$ft^2$, the uranium and plutonium were extracted quantitatively (U loss 0.005%, Pu loss 0.04%) by the solvent, and the bulk of the fission products was discharged as waste in the raffinate stream. The uranium-plutonium-bearing solvent stream flowed to the mid-section of the partitioning column (IB) where the uranium-plutonium separation was made.

In the partitioning column the plutonium was reduced to the trivalent state and stripped from the solvent by an aqueous solution of ferrous ammonium sulfate (0.04 M) and sulfamic acid (0.08 M), after which the aqueous plutonium solution was scrubbed free of uranium with solvent in the lower section of the partitioning column. The volume ratios of strip/feed/scrub were 1/6.1/1.5, and the total volumetric velocity in the partitioning column was 355 gal/hr/$ft^2$. Uranium loss to the aqueous plutonium stream (IBP) averaged $<$ 0.001 per cent and plutonium loss to the organic stream averaged 0.6 per cent.

The organic uranium effluent from the partitioning column cascaded to the strip column (IC), where the uranium was stripped from the solvent by demineralized water. The aqueous/organic ratio was 1.3/1 and the total velocity in the strip column (IC) was 354 gal/hr/$ft^2$. Uranium loss to the stripped organic stream (ICW) averaged $<$ 0.01 per cent.

Second Uranium Solvent-Extraction Cycle. The first-cycle aqueous uranium strip solution, containing approximately 40 g of uranium per liter, was continuously jetted to a phase separator, which fed the continuous between-cycle uranium evaporator. A 10-fold volume reduction was made in the evaporator, and the product stream was adjusted with concentrated nitric acid to obtain a second-uranium-cycle extraction-column feed (IDF) containing 340 g of uranium per liter and 2 M in $HNO_3$.

In the second-uranium-cycle extraction column (ID), the uranium was extracted into the solvent, using 3 M $HNO_3$, 0.04 M ferrous ammonium sulfate, 0.08 M sulfamic acid as scrub. The aqueous raffinate from this column, containing residual plutonium and fission products, flowed to an evaporator for acid recovery which will be discussed later. The second-uranium-cycle extraction column (ID) was operated with an average scrub/feed/solvent flow volume ratio of 1/1.5/5.5 and an average velocity of 389 gal/hr/ft$^2$. The average uranium loss in the aqueous raffinate was 0.005 per cent.

The uranium-bearing organic stream from the second-uranium-cycle extraction column was stripped of uranium in the stripping column (IE) by demineralized water, using an average aqueous/organic ratio of 1.3/1 and a total velocity of 377 gal/hr/ft$^2$. The average loss of uranium to the stripped solvent was 0.07 per cent.

The resulting aqueous solution from the strip column, containing 45 g of uranium per liter, was continuously pumped to a phase separator, which fed a bubble-cap-column evaporator for steam stripping of residual organic and for concentrating the uranium. The concentrated product was packaged in 55-gal stainless steel drums for shipment to Y-12 for conversion to $UO_3$.

Fission product activities and chemical composition of the uranium product solutions are discussed in section 5.1.2.

Second Plutonium Solvent-Extraction Cycle. Chemical adjustment of the plutonium-bearing stream (IBP) from the partitioning column (IB) of the first cycle was accomplished by adding concentrated nitric acid to increase the $HNO_3$ from approximately 1.5 to 6.0 M and by adding 2 M $NaNO_2$ to a concentration of 0.05 M, thereby oxidizing the plutonium from the trivalent to the tetravalent state. The adjusted stream (IIAF) was then pumped to the second-plutonium-cycle extraction column (IIA), where the plutonium was extracted into the solvent and scrubbed

with 0.5 M $HNO_3$. The scrub/feed/solvent volumetric ratio in the IIA column was 1/7.5/2 and the total volumetric velocity was 279 gal/hr/ft$^2$. The plutonium loss to the aqueous raffinate was 0.04 per cent.

The plutonium-bearing solvent from the IIA column cascaded to the second plutonium stripping column (IIB) where the plutonium was stripped by 0.05 M hydroxylamine sulfate solution. The strip solution also served to reduce the plutonium to the trivalent state for subsequent isolation (see below).

The strip/organic volume ratio used in the IIB column averaged 1.5/1 and the total velocity was 340 gal/hr/ft$^2$. The average plutonium loss in the organic raffinate was 0.045 per cent.

Plutonium Isolation. Isolation of the plutonium contained in the aqueous stream from the second plutonium strip column (IIB) was accomplished by sorption of plutonium on Dowex-50 resin, using one of three resin columns operated in parallel. After 500 to 600 g of plutonium was sorbed on a single resin column, the plutonium-bearing stream was diverted to an alternate column and the loaded column was processed. The plutonium-depleted effluent from the resin column was discarded as waste. The plutonium loss in the resin column was 0.02 per cent.

A three-step process was used to remove the plutonium from the resin:

1. Uranium sorbed on the resin was first removed from the plutonium stream by downflow elution with 10-14 resin column volumes (40-60 liters) of solution containing 0.25 M $H_2SO_4$ and 0.05 M hydroxylamine.

2. Approximately 80 to 90 per cent of the plutonium on the resin was then removed by upflow elution with 3 volumes (10 to 12 liters) of solution containing 5.7 M $HNO_3$ and 0.3 M sulfamic acid.

3. The column was then reconditioned for reuse by pumping up through it 30 liters of solution containing 0.1 M $HNO_3$ and 0.1 M sulfamic acid.

Activity levels and chemical compositions of the plutonium product are presented in Sec. 5.1.2.

Solvent Recovery. All spent solvent streams flowed to a single solvent recovery system (Fig. 7-5) for continuous regeneration prior to reuse. The spent solvent was first contacted with 0.2 M $Na_2CO_3$ in a pulse column, using an aqueous/organic volume ratio of 1/10 and a total velocity of 394 gal/hr/ft$^2$. From the carbonate wash column the solvent flowed to a static spray column, where it was contacted with 0.05 M $HNO_3$ using an aqueous/organic volume ratio of 1/20 and a total velocity of 860 gal/hr/ft$^2$. The regenerated solvent then flowed to a surge tank for reuse.

Acid Recovery. The aqueous raffinate streams from the three extraction columns (IA, ID, and IIA) were processed in the acid recovery system to recover nitric acid for reuse in the dissolver acid feed and in the IA column scrub.

The acid recovery system consisted of two pot evaporators, one each for the wastes from the first and second cycles, and a bubble-cap fractionation column.

The raffinate from the first-cycle extraction column (IAW stream) (2.3 M $HNO_3$) was concentrated by a factor of 3, and the concentrate (approximately 6 M $HNO_3$), containing all the waste salts of iron, sodium, and aluminum, was transferred to a holdup tank for monitoring and discharge to waste storage. The acidic vapors from this evaporator flowed to the acid fractionator.

The raffinate streams from the extraction columns of the second uranium and plutonium cycles, containing 72 per cent of the recoverable acid, were combined and concentrated to 8.5 M $HNO_3$. The concentrate was airlifted to a storage tank for reuse in the slug dissolver. Acid vapors from the second cycle acid evaporator flowed to the bubble-cap fractionator for concentration, along with the vapors from the first cycle evaporator, to 8.5 M $HNO_3$. The fractionator concentrate, containing no metallic ions, was pumped to a surge tank which supplied nitric acid to the first-cycle extraction-column scrub (IAS). Fractionator bottoms in excess of the IAS requirement overflowed to the recovered acid storage tank for reuse in the dissolver.

The principal advantage of this acid recovery system is the ability to automatically return to the process via the dissolver any uranium or plutonium lost to the second-cycle waste streams. The presence of iron, sodium, and sulfate ions in the recovered acid from the second-cycle waste did not cause excessive foaming in the dissolver. Satisfactory uranium and plutonium losses (each less than 0.1 per cent) and one-cycle gross $\gamma$ decontamination factors ($7.3 \times 10^3$) were obtained; however, no comparison was made with the decontamination obtainable when fresh acid was used in the dissolver.

### 5.1.2 Decontamination Factors and Product Purity

Uranium Decontamination. Two-cycle uranium decontamination factors (Table 5-3) ranged from $2 \times 10^3$ to $5 \times 10^4$ for gross $\beta$ and from $3 \times 10^3$ to $8 \times 10^5$ for gross $\gamma$ activity, and increased with increasing activity in the feed solution while product levels remained essentially constant.

Table 5-3. Two-Cycle Uranium Decontamination Factors

| Product No. | Decontamination Factors | | | | | |
|---|---|---|---|---|---|---|
| | Gr β | Gr γ | Ru γ | TRE β | Zr-Nb γ | Cs γ |
| S-1 | $2.2 \times 10^3$ | $3.4 \times 10^3$ | $4.7 \times 10^2$ | $3.1 \times 10^4$ | $2.2 \times 10^3$ | $3.9 \times 10^4$ |
| S-5 | $1.6 \times 10^4$ | $4.9 \times 10^4$ | $1.1 \times 10^4$ | $4.9 \times 10^5$ | $9.5 \times 10^4$ | $5.2 \times 10^4$ |
| S-9 | $1.4 \times 10^4$ | $1.1 \times 10^5$ | $2.1 \times 10^4$ | $1.9 \times 10^6$ | $8.4 \times 10^4$ | $2.4 \times 10^6$ |
| S-14 | $2.1 \times 10^4$ | $1.5 \times 10^5$ | $1.0 \times 10^4$ | $2.3 \times 10^6$ | $2.1 \times 10^5$ | $2.0 \times 10^6$ |
| S-16 | $4.7 \times 10^4$ | $8.3 \times 10^5$ | $1.2 \times 10^5$ | $8.4 \times 10^6$ | $1.4 \times 10^3$ | $9.0 \times 10^6$ |

Uranium Product Purity. The uranium concentration of the uranyl nitrate product solution averaged 420 g/liter and the $HNO_3$ averaged 0.9 M; it met fission product and plutonium content specifications. All product solutions were acceptable for $UO_3$ production at Y-12. Two product shipments contained 230-290 ppm of calcium as a result of using process water in place of demineralized in the uranium strip column. Two product shipments contained 118 and 270 ppm of iron as a result of carryover from the ID column; otherwise, the total metallic ion impurities in the uranium product were of a satisfactory magnitude, 20-100 ppm. Fission product activity levels, chemical composition and metallic ion impurities of the uranium product solution are presented in Tables 5-4 and 5.

Table 5-4. Uranium Product Composition

| Product No. | U, g/liter | $HNO_3$, M | Pu, ppb | Fission Product Activity, c/m/ml | | | | | | |
|---|---|---|---|---|---|---|---|---|---|---|
| | | | | Gr β | Gr γ | Ru γ | Zr-Nb γ | TRE β | Cs γ | UX β[a] |
| 1 | 396.7 | 0.98 | 17 | $7.0 \times 10^3$ | $2.6 \times 10^3$ | 618* | 189 | 807 | 204 | -- |
| 5 | 407.7 | 1.15 | <2.0 | $5.5 \times 10^3$ | $1.1 \times 10^3$ | 291 | 222 | 78 | 332 | -- |
| 9 | 435.0 | 0.93 | 6.4 | $7.4 \times 10^3$ | 676 | 147 | 276 | 20 | 25 | $1.1 \times 10^4$ |
| 14 | 418.9 | 0.81 | <1.0 | $6.5 \times 10^3$ | 671 | 251 | 216 | 30 | 41 | $5.5 \times 10^3$ |
| 16 | 424.25 | 0.72 | 1.9 | $2.2 \times 10^4$ | $1.7 \times 10^3$ | 313 | 590 | 92 | 126 | -- |

[a] UX, β and gross β measured at same time.

Table 5-5 Metallic Ion Impurities in Uranium Product[1]

| Product No. | U, g/liter | Contaminants | | | | | | | | | | | |
|---|---|---|---|---|---|---|---|---|---|---|---|---|---|
| | | Al[2] | B | Ca | Cr | Fe | Mg | Mn | Si | P | Pu | Cu | Ni |
| 1 | 397 | 5 | 2 | 43 | 4 | 33 | 1 | -- | 1 | 16 | 17 | -- | -- |
| 2 | 399 | 5 | 4 | 288 | 5 | 53 | 5 | -- | 31 | 13 | 20 | -- | -- |
| 3 | 403 | 5 | 3 | 237 | 4 | 37 | 5 | -- | 73 | 20 | 4 | -- | -- |
| 4 | 405 | 9 | 3 | 43 | 4 | 36 | 21 | -- | 25 | 4 | 2 | -- | -- |
| 5 | 408 | 9 | 4 | 5 | 5 | 21 | 1 | -- | 20 | 18 | 2 | -- | -- |
| 6 | 396 | -- | 4 | 29 | 5 | 22 | 4 | -- | 53 | 18 | 2 | -- | -- |
| 7 | 406 | 5 | 2 | 16 | 2 | 17 | 1 | -- | 3 | 15 | 2 | -- | -- |
| 8 | 425 | 2 | 5 | 15 | 2 | 16 | 1 | -- | 22 | 19 | 2 | -- | -- |
| 9 | 435 | 3 | 5 | 10 | 6 | 18 | 1 | -- | 8 | 17 | 6 | 2 | 3 |
| 10 | 434 | 2 | - | 7 | 4 | 20 | 1 | -- | 1 | 16 | 2 | 4 | 3 |
| 11 | 440 | 4 | 3 | 10 | 5 | 118 | 1 | 3 | 35 | 14 | 1 | 2 | 24 |
| 12 | 437 | 5 | 2 | 4 | 3 | 19 | 1 | 1 | 31 | 16 | 2 | 1 | -- |
| 13 | 422 | 2 | 2 | 2 | 3 | 13 | 1 | 1 | 45 | 16 | 5 | 1 | -- |
| 14 | 419 | 1 | 1 | 1 | 1 | 23 | 1 | 1 | 33 | 16 | 1 | 1 | 4 |
| 15 | 425 | 1 | 5 | 2 | 3 | 15 | 1 | -- | 73 | 19 | 1 | 1 | -- |
| 16 | 424 | 2 | 4 | 3 | - | 27 | 1 | 1 | 21 | 21 | 2 | 7 | 18 |
| 17 | 427 | 2 | 5 | 6 | 3 | 12 | 1 | 1 | 10 | 20 | 5 | 12 | -- |
| 18 | 422 | 2 | 4 | 5 | 3 | 271 | 1 | -- | 11 | 20 | 5 | 1 | -- |

[1]Concentration in parts per million.

[2]Concentration parts per billion.

Plutonium Decontamination. Through two cycles of solvent extraction plus ion exchange the plutonium decontamination factors (Table 5-6) ranged from $1.5 \times 10^5$ to $4.9 \times 10^5$ for gross β and from $7.3 \times 10^5$ to $4.8 \times 10^7$ for gross γ activity and increased with activity level of the feed solution.

Table 5-6. Plutonium Decontamination Factors

| Pu, g/ton U | Decontamination Factors | | | | | |
|---|---|---|---|---|---|---|
| | Gr β | Gr γ | Ru γ | Zr-Nb γ | TRE β | Cs γ |
| 50-100 | $1.9 \times 10^5$ | $3.1 \times 10^5$ | $3.2 \times 10^4$ | $6.8 \times 10^5$ | $4.2 \times 10^5$ | $2.0 \times 10^6$ |
| 100-150 | $4.9 \times 10^5$ | $7.3 \times 10^5$ | $1.4 \times 10^5$ | $2.4 \times 10^6$ | $1.3 \times 10^6$ | $1.4 \times 10^7$ |
| 150-200 | $2.3 \times 10^5$ | $8.3 \times 10^5$ | $1.4 \times 10^5$ | $3.3 \times 10^6$ | $5.1 \times 10^6$ | $1.2 \times 10^8$ |
| 200-250 | $1.5 \times 10^5$ | $8.6 \times 10^5$ | $1.6 \times 10^5$ | $6.3 \times 10^3$ | $6.2 \times 10^3$ | $5.5 \times 10^7$ |

Plutonium Product Purity. The plutonium product solutions contained from 37.6 to 46.5 g of plutonium per liter and were 3.4-3.9 M in $HNO_3$ (Table 5-7).

Table 5-7. Plutonium Product Composition

| Pu, g/liter | $HNO_3$, M | Fission Product Activity, c/m/ml | | | | | |
|---|---|---|---|---|---|---|---|
| | | Gr β | Gr γ | Ru γ | Zr-Nb γ | TRE β | Cs γ |
| 37.6 | 3.4 | $4.7 \times 10^5$ | $1.6 \times 10^5$ | $1.0 \times 10^5$ | $3.0 \times 10^4$ | $9.2 \times 10^4$ | $8.5 \times 10^3$ |
| 43.1 | 3.4 | $1.8 \times 10^5$ | $8.3 \times 10^4$ | $1.8 \times 10^4$ | $8.2 \times 10^3$ | $2.5 \times 10^4$ | $3.6 \times 10^3$ |
| 46.5 | 3.9 | $3.5 \times 10^5$ | $7.4 \times 10^4$ | $1.1 \times 10^4$ | $8.1 \times 10^3$ | $8.2 \times 10^3$ | $4.2 \times 10^2$ |
| 39.3 | 3.9 | $5.0 \times 10^5$ | $6.5 \times 10^4$ | $9.6 \times 10^3$ | $5.5 \times 10^3$ | $5.2 \times 10^3$ | $8.5 \times 10^2$ |

## 5.2 Special Plutonium Separation Programs

Two special separation programs were conducted for the recovery of plutonium with a high content of $Pu^{240}$ for the Special Separations Group at Y-12. During the special separations program 160 lb of irradiated uranium containing 162 g of plutonium (13.7 per cent $Pu^{240}$) was recovered from NRX irradiated natural uranium fuel. In the plutonium-aluminum alloy program 171 g of plutonium with 29.7 per cent $Pu^{240}$ was recovered from 11 NRX irradiated plutonium-aluminum alloy slugs.

### 5.2.1 Feed Preparation

Feed for the special separations program was obtained by dissolving the central-third sections of four NRX rods which had been irradiated to 2025 g of plutonium per ton of uranium and sawed to 8-in. lengths. The aluminum-jacketed uranium slugs were dissolved in 8.7 M $HNO_3$ containing 0.01 M $Hg(NO_3)_2$ at a

dissolver reflux temperature of 110°C. The resulting dissolver solution contained 159 g of uranium per liter and 4.3 M $HNO_3$. For each mole of uranium (plus associated aluminum) dissolved, 5.6 moles of nitric acid was consumed. This dissolver solution was mixed with approximately 300 gal of 1.75 M uranyl nitrate solution and adjusted to 320 g of uranium per liter and 2.5 M $HNO_3$ to facilitate processing under the same Purex chemical flowsheet used in the ORNL slug program (see Section 5.1.2).

Feed for the plutonium-aluminum program was prepared by dissolving eleven 10-in.-long plutonium-aluminum slugs which had been irradiated in the NRX reactor. Dissolution of these slugs in 5.4 M $HNO_3$ containing 0.05 M $Hg(NO_3)_2$ was 80 per cent complete after the initial 62-hr digestion. Two additional 44-hr digestions were required for complete dissolution of the Pu-Al alloy slugs.

To facilitate plutonium recovery, the solution from the three dissolvings, containing 171 g of plutonium and 8 lb of aluminum was added to 1000 gal of 1.75 M uranyl nitrate solution, and a feed containing 320 g of uranium per liter and 2.0 M in $HNO_3$ was prepared for solvent extraction.

The initial dissolver solution, containing 98 per cent of the plutonium (162.4 g) in 363.4 liters, was analyzed for fission product (Table 5-8).

Table 5-8. Fission Product Distribution in Pu-Al Alloy Dissolver Solution

| Activity, c/m/ml | | | | | | | |
|---|---|---|---|---|---|---|---|
| Gr β | Gr γ | Ru γ | Zr γ | Nb γ | TRE β | Cs γ | Pu α (TTA)[a] |
| $4.2 \times 10^9$ | $2.3 \times 10^9$ | $1.7 \times 10^9$ | $2.9 \times 10^8$ | $7.8 \times 10^7$ | $1.5 \times 10^9$ | $5.4 \times 10^8$ | $5.9 \times 10^7$ |

[a]The plutonium concentration was 0.447 mg/ml.

### 5.2.2 Solvent Extraction

The chemical flowsheet and solvent extraction procedure described in Sec. 5.1.2 were used to effect uranium and plutonium recovery for both programs. Plutonium recoveries during the SSP and Pu-Al alloy programs were 99.7 and 99.8 per cent, respectively.

### 5.2.3 Plutonium Product

The plutonium product solutions from the special separations and Pu-Al programs were transferred to the Y-12 Special Separations Group. The isotopic analyses of these plutonium products are given in Table 5-9.

Table 5-9. Special Separations and Plutonium-Aluminum Plutonium Products Mass Assay

| Amount, wt % | SSP | Pu-Al Alloy |
|---|---|---|
| Pu-239 | 84.3 | 64.9 |
| Pu-240 | 13.7 | 29.7 |
| Pu-241 | 1.8 | 4.5 |
| Pu-242 | 0.2 | 0.87 |

### 5.2.4 Uranium Product

During the special separations and Pu-Al plutonium recovery programs, the one-cycle uranium product solution was continuously recycled to an alternate feed tank for use in recovering the plutonium that remained in the system during the initial processing pass. When all the plutonium had been recovered, the uranium was taken from the system as product and returned to the usual production channel through Y-12.

## 5.3 Brookhaven National Laboratory Reactor Fuel Processing

Approximately 6.4 tons of aluminum-clad uranium fuel elements irradiated to 500 Mwd/ton in the Brookhaven National Laboratory Reactor and decayed for approximately one year were processed to recover 6.4 tons of uranium and 2.7 kg of plutonium. Uranium and plutonium recoveries were 97.6 and 98.1 per cent, respectively, of the feed content.

### 5.3.1 Process Description and Results

The BNL fuel elements were very similar to the ORNL Graphite Reactor fuel; therefore, the chemical and equipment flowsheets used for the processing of the BNL fuel elements were essentially identical with those used for the ORNL fuel elements (Sec. 5.1). This discussion is therefore restricted to significant variations and results of the various steps in the process.

Feed Preparation. The previously described (Sec. 5.1.1) continuous nitric acid dissolution process was used to dissolve the BNL fuel elements. The average chemical and individual fission product activity composition of the dissolver solution are presented in Table 5-10.

Table 5-10. BNL Dissolver Solution Composition

| U, g/liter | $HNO_3$, M | Activity, c/m/ml | | | | | | | |
|---|---|---|---|---|---|---|---|---|---|
| | | Gr β | Gr γ | Ru γ | Zr γ | Nb γ | TRE β | Cs γ | Pu α |
| 318 | 2.0 | $1.1 \times 10^9$ | $5.6 \times 10^9$ | $8.1 \times 10^7$ | $8.0 \times 10^7$ | $1.3 \times 10^8$ | $7.0 \times 10^8$ | $2.2 \times 10^8$ | $1.2 \times 10^8$ |

Recovered waste acid (8.5 M $HNO_3$) was used to dissolve BNL slugs during the first half of the program, and fresh nitric acid was used during the remainder of the program. The recovered acid contained sodium, iron, and sulfate ions from the second-cycle wastes, and the fresh acid was a commercial grade product. No difference was noted in the dissolving action of the recovered and fresh acid. In the change from recovered to fresh acid, the program was terminated before the recovered acid could be completely flushed from the system; therefore a direct comparison of the relative effect on fission product decontamination of the use of fresh and recovered acid was not possible.

Solvent Extraction. The average flow rates and chemical composition of the various streams of the modified Purex chemical flowsheet used in the BNL program are presented in Table 5-11.

Table 5-11. Average Composition of Entering Streams

| Stream | Compositions | Flow Rate gal/hr |
|---|---|---|
| IAF | 318 g/liter U<br>1.94 M $HNO_3$ | 17.4 |
| IAX | 30% TBP | 58.6 |
| IAS | 3 M $HNO_3$ | 14.0 |
| IBX | 0.04 M $FeSO_4 \cdot NH_4SO_4$<br>0.08 M $NH_2SO_3H$ | 9.0 |
| IBS | 30% TBP | 15.3 |
| ICX | 0.005 M $HNO_3$ | 102.5 |
| IDF | 340 g/liter U<br>2.3 M $HNO_3$ | 14.2 |
| IDS | 3.0 M $HNO_3$, 0.02 M $FeSO_4 \cdot (NH_4)_2SO_4$,<br>0.04 M $NH_2SO_3H$ | 10 |
| IDX | 30% TBP | 55.1 |
| IEX | $H_2O$ | 76.0 |
| IIAF | 6.0 M $HNO_3$<br>0.10 M $NaNO_2$ | ~17.0 |
| IIAX | 30% TBP | 4.9 |
| IIAS | 0.5 M $HNO_3$ | 2.0 |
| IIBX | 0.05 M $(NH_2OH)_2 \cdot H_2SO_4$<br>0.02 M $HNO_3$ | 6.2 |
| SRS | 0.05 M $HNO_3$ | 16.1 |
| CWC | 0.2 M $Na_2CO_3$ | 9.2 |

An unusual amount of interfacial solids appeared during the processing of the BNL fuel elements. This particulate matter collected radioactivity at the organic-aqueous interfaces and was then redistributed, primarily in the solvent streams. Some reduction in the solids formation and an increase in the gross $\gamma$ decontamination factor across the solvent recovery system from 7 to 19 was obtained by decreasing the organic/aqeuous ratio in the carbonate scrub column from 8/1 to 5/1. Other flowsheet changes made to improve decontamination included:

1. First-cycle extraction-column scrub-section height increased from 12 ft to 16 ft
2. Uranium saturation in solvent of first-cycle extraction column increased from 60 per cent to 75 per cent
3. Nitric acid content of the scrub to the first-cycle extraction column increased from 3.0 M to 4.5 M

The combined effect of these flowsheet changes was an 8-fold increase in fission product decontamination. A comparison of individual fission product decontamination factors for two cycles of uranium extraction under the conditions stated are given in Table 5-12.

Table 5-12. Uranium Decontamination Factors

| Fission Product | 60% U Saturation in Organic, 12-ft Scrub Section IAX/IAS = 5.8/1 | 75% U Saturation in Organic, 16-ft Scrub Section IAX/IAS = 4.7/11 |
|---|---|---|
| | Two-Cycle Decontamination Factors | |
| Gross β | $5.5 \times 10^3$ | $4.1 \times 10^4$ |
| Gross γ | $2.8 \times 10^3$ | $2.0 \times 10^4$ |
| Ru γ | 640 | $4.2 \times 10^3$ |
| Zr γ | $1.3 \times 10^4$ | $6.0 \times 10^4$ |
| Nb γ | $2.8 \times 10^3$ | $2.2 \times 10^4$ |
| TRE β | $1.8 \times 10^5$ | $1.1 \times 10^6$ |
| Cs γ | $1.6 \times 10^4$ | $5.6 \times 10^5$ |
| | One-Cycle Decontamination Factors | |
| Gross β | 74 | 609 |
| Gross γ | 28 | 345 |
| Ru γ | 178 | 68 |
| Zr γ | 36 | $1.2 \times 10^3$ |
| Nb γ | -- | 265 |
| TRE β | -- | $1.2 \times 10^4$ |
| Cs γ | -- | $1.6 \times 10^4$ |

The two-cycle uranium product did not meet fission product specifications and was recycled through two additional solvent-extraction cycles at the end of the program for additional decontamination and for equipment decontamination. A gross $\gamma$ decontamination factor of 30 was obtained during the recycle, after which the product was acceptable for shipment to Y-12 for $UO_3$ preparation.

After two solvent-extraction cycles and one resin-column isolation, the BNL plutonium product was packaged for shipment.

The average flowing stream and composite plant losses (including reprocessing) of uranium and plutonium are presented in Table 5-13.

Column upsets accounted for a major part of the relatively high composite losses. During equilibrium operation poor organic stripping in the first cycle and second plutonium strip columns contributed the major losses.

Table 5-13. Flowing Stream and Composite Losses

| Stream | Losses, % | |
|---|---|---|
| | Uranium | Plutonium |
| IAW | 0.12 | 0.005 |
| IBP | 0.002 | --- |
| IBU[a] | --- | 0.33 |
| ICW | 0.26 | 0.18 |
| IDW | 0.004 | --- |
| IEW | 0.04 | --- |
| IIAW | --- | 0.16 |
| IIBPW | --- | 0.07 |
| IDF | --- | 0.15 |
| IIBW | --- | 0.40 |
| Total Flowing Stream | 0.45 | 0.81 |
| Composite | 2.4 | 1.9 |

[a]IBU Pu loss = IDF + ICW.

### 5.3.2 Product Purity

Uranium Product Purity. The composition and fission product activity of the BNL uranium product are presented in Table 5-14.

Table 5-14. Uranium Product Composition

| Shipment | U, g/liter | $HNO_3$, M | U-235, Wt % | Pu, ppb | Specific Gravity at 25°C |
|---|---|---|---|---|---|
| 1 | 396.8 | 1.37 | 0.660 | 3 | 1.5726 |
| 2 | 406.2 | 1.23 | 0.663 | 4 | 1.5835 |

| Shipment | Fission Product Activity, c/m/ml | | | | | | |
|---|---|---|---|---|---|---|---|
| | Gross β | Gross γ | Ru γ | Zr γ | Nb γ | TRE β | Cs γ |
| 1 | $4.3 \times 10^4$ | $2.8 \times 10^4$ | $2.3 \times 10^4$ | $1.1 \times 10^3$ | $5.9 \times 10^3$ | ~770 | $1.7 \times 10^3$ |
| 2 | $3.9 \times 10^4$ | $3.0 \times 10^4$ | $1.9 \times 10^4$ | 610 | $6.5 \times 10^3$ | ~630 | $1.6 \times 10^3$ |

As previously mentioned, the two-cycle uranium product did not meet fission product specifications and was recycled through two additional cycles of solvent extraction. While the four-cycle uranium product still did not meet fission product specifications, it was of sufficient purity to be acceptable to Y-12 for $UO_3$ preparation. Ruthenium comprised 80 per cent of the fission product activity in the uranium product. Niobium, cesium, and zirconium were the other major contaminants in the product. The uranium met the plutonium specification (10 ppb) after the first two-cycle pass.

The metallic ion contamination in the BNL uranium product is presented in Table 5-15.

Table 5-15. Metallic Ion Concentration

| Product | Metallic Ion Concentration, ppm | | | | | | | |
|---|---|---|---|---|---|---|---|---|
| | Al | B | Ca | Cr | Fe | Mg | Mn | Si |
| 1 | 1.3 | 6.3 | 310 | 3.3 | 36.9 | 8.8 | 1.0 | 57 |
| 2 | - | 3.9 | 2.2 | 3.4 | 28.8 | 1.0 | 1.0 | 21.4 |

Metallic ions not listed were present in concentrations below the limit of detection by spectrographic analysis. The first shipment was contaminated by calcium and magnesium present in the untreated process water, which was used instead of demineralized water for uranium stripping.

Plutonium Product Purity. Chemical composition and fission product activities of the BNL plutonium product are presented in Table 5-16.

Table 5-16. Plutonium Product Solution Concentration

| Product No. | Pu, g/liter | Gross $\alpha$, c/m/ml | Scint. $\gamma$, c/m/ml | $HNO_3$, M | Mass Assay | | |
|---|---|---|---|---|---|---|---|
| | | | | | Pu-239, % | Pu-240, % | Pu-241, % |
| 1 | 32.1 | $2.5 \times 10^9$ | $2.5 \times 10^5$ | 4.2 | 95.9 | 3.8 | 0.3 |
| 2 | 35.9 | $2.6 \times 10^9$ | $1.4 \times 10^5$ | 4.6 | 96.1 | 3.7 | 0.2 |
| 3 | 43.3 | $3.4 \times 10^9$ | $1.8 \times 10^5$ | 4.5 | 95.7 | 4.1 | 0.3 |
| 4 | 32.8 | $2.4 \times 10^9$ | $1.6 \times 10^5$ | 4.6 | 96.8 | 3.1 | 0.2 |
| Avg. | 36.0 | $2.7 \times 10^9$ | $1.8 \times 10^5$ | 4.5 | 96.1 | 3.7 | 0.25 |

| Fission Product Activities, c/m/ml | | | | | | |
|---|---|---|---|---|---|---|
| Gross $\beta$ | Gross $\gamma$ | Ru $\gamma$ | Zr $\gamma$ | Nb $\gamma$ | TRE $\beta$ | Cs $\gamma$ |
| $2.2 \times 10^5$ | $5.1 \times 10^5$ | $3.5 \times 10^4$ | $1.2 \times 10^5$ | $1.2 \times 10^5$ | $2.0 \times 10^5$ | $1.4 \times 10^3$ |

Plutonium decontamination factors are given in Table 5-17.

Table 5-17. Plutonium Decontamination Factors

| Activity | One-cycle Plutonium Decontamination Factors | | Two-cycle Plutonium Decontamination Factors |
|---|---|---|---|
| | 60% U Sat. | 75% U Sat. | |
| Gross $\beta$ | - | $4.7 \times 10^3$ | $1.1 \times 10^6$ |
| Gross $\gamma$ | 740 | $1.4 \times 10^3$ | $2.3 \times 10^5$ |
| Ru $\gamma$ | 740 | 550 | $4.8 \times 10^5$ |
| Zr $\gamma$ | 206 | 133 | $1.4 \times 10^5$ |
| Nb $\gamma$ | 524 | $1.2 \times 10^3$ | $2.1 \times 10^5$ |
| TRE $\beta$ | - | $1.4 \times 10^5$ | $7.3 \times 10^5$ |
| Cs $\gamma$ | - | $4.8 \times 10^5$ | $3.3 \times 10^7$ |

Zirconium and niobium each contributed 24 per cent of the gross $\gamma$ activity in the plutonium product, while ruthenium contributed only 7 per cent of the gross $\gamma$. The presence of the large percentage of zirconium and niobium in the plutonium after ion exchange is attributed to the existence of interfacial solids in the system which selectively sorbed these products. The solids containing the activity were filtered from the plutonium-bearing stream as it flowed through the resin bed and were then washed from the resin, during the plutonium elution, into the product.

## 5.4 Chalk River Tank Car Program

During the CRTC program 19.7 tons of uranium and about 30 g of neptunium were recovered from two 5000-gal tank car lots of uranyl nitrate solution received from Atomic Energy of Canada Limited. This uranyl nitrate solution had been partially purified in the Chalk River radiochemical separations plant and was shipped to ORNL for final purification and recovery of the uranium. Because of the sizeable amount of $Np^{237}$ in the solution, ORNL decided to develop a flowsheet for simultaneous recovery of the neptunium with the uranium.

A modified Purex chemical flowsheet using 30 per cent TBP in kerosene diluent and nitric acid as salting agent was used to separate neptunium, plutonium, and uranium and to produce purified uranium and neptunium. The plutonium was not recovered.

### 5.4.1 Feed Preparation

Concentrated uranyl nitrate solution containing 450 g of uranium per liter was transported in 1500-gal batches to the ORNL Metal Recovery Plant from the railroad siding at K-25. Each truck load was monitored for uranium and transferred to the plant feed tanks.

At the beginning of the program the solution was processed with the chemical composition as received. However, as it became apparent that a higher concentration of nitric acid in the feed aided neptunium recovery in the initial extraction column, the feed acid concentration was adjusted to 2.0 M and the uranium concentration was adjusted to 330 g/liter. Additional oxidizing or reducing agents were not added to the feed tanks. The average composition of feed solution is given in Table 5-18.

Table 5-18. Feed Composition

| Composition Concentrations | | | | | |
|---|---|---|---|---|---|
| c/m/ml | | | | U, g/l | $HNO_3$, M |
| Gr β | Gr γ | Pu α | $Np^{237}$ α | | |
| $1x10^5$ | $1x10^5$ | $1x10^5$ | 600 | 356 | 1.8 |

### 5.4.2 Solvent Extraction

Two cycles of solvent extraction were used for recovering uranium and neptunium from the feed solution. The first cycle was used to recover uranium in a usable form and to make a gross separation of neptunium and plutonium from uranium. The second cycle was used to further purify neptunium of plutonium and other metallic ions.

The chemical flowsheet, incorporating neptunium and uranium recovery, differs from the usual Purex flowsheet for uranium and plutonium recovery in the following points: (1) The equilibrium concentration of nitric acid in the partitioning column aqueous effluent (IBP) was maintained at 1.0 M instead of the usual 2.0 M, (2) the addition of sodium nitrite was omitted from the second cycle feed preparation step, and (3) flow-rate changes were also made to effect approximately 60 per cent uranium saturation in the solvent in the first cycle extraction column. During this program, the effects of nitric acid concentration on neptunium extraction and partitioning were observed. A reducing agent was added to the extraction column scrub stream during a portion of the program. The effects of these changes are discussed later.

The average chemical flowsheet conditions are listed in Table 5-19, along with conditions found in this study to give the best neptunium recovery. With this flowsheet, neptunium, uranium, and plutonium were extracted in the IA column and the neptunium and plutonium were partitioned from the uranium in the IB column. The neptunium and plutonium in the aqueous phase effluent from the IB column flowed to the IIA column, where neptunium was separated from plutonium by omitting the oxidation of plutonium with sodium nitrite. The neptunium plus some plutonium was extracted in the IIA column in the organic phase, which flowed to the IIB column for stripping. The strip solution, containing neptunium plus traces of plutonium and uranium, flowed through a 7-in. dia by 14-in. high bed of Dowex 50 cation resin which sorbed these elements quantitatively. The neptunium and uranium were eluted from the resin with a solution containing 0.25 M $H_2SO_4$ acid and 0.05 M hydroxylamine sulfate. The plutonium remained on the resin and was eluted later with 6 M $HNO_3$ containing 0.3 M sulfamic acid.

From the IB partition column, the organic phase containing uranium free of neptunium flowed to the stripping column (IC). The strip solution containing the uranium was evaporated to 400 g of uranium per liter and packaged for shipment.

Table 5-19. Neptunium-Uranium Recovery Flowsheet

| Entering Stream | Actual | | | | Recommended | | | |
|---|---|---|---|---|---|---|---|---|
| | Flow Rate, gal/hr | Average Stream Composition | | | Flow Rate, gal/hr | Stream Composition | | |
| | | $HNO_3$, M | U, g/l | Others | | $HNO_3$, M | U, g/l | Others |
| 1st Cycle | | | | | | | | |
| IAF | 12.5 | 1.8 | 356 | Pu $1.3 \times 10^5$ α c/m/ml<br>Np-237 ~ 600 α c/m/ml | 14 | 2.0 | 330 | - |
| IAX | 58.5 | - | - | 30% TBP | 58 | - | - | 30% TBP |
| IAS | 8 | 3 | - | - | 8 | 3 | - | - |
| IBX | 10.6 | - | - | 0.08 M $NH_2SO_3H$<br>0.04 M $FeSO_4 \cdot (NH_4)_2SO_4$ | 10 | - | - | 0.08 M $NH_2SO_3H$<br>0.04 M $FeSO_4 \cdot (NH_4)_2SO_4$ |
| IBS | 15.2 | - | - | 30% TBP | 15 | - | - | - |
| ICX | 110 | - | - | $H_2O$ | 100 | - | - | $H_2O$ |
| 2nd Cycle | | | | | | | | |
| IIAF | 17.4 | 6.0 | - | | 16 | 6 | - | - |
| IIAX | 4.5 | - | - | 30% TBP | 4.0 | - | - | 30% TBP |
| IIAS | 2 | 0.5 | - | - | 2 | 0.5 | - | - |
| IIBX | 6.1 | - | - | 0.05 M $(NH_2OH)_2 \cdot H_2SO_4$ | 6 | - | - | 0.05 M $(NH_2OH)_2 \cdot H_2SO_4$ |

The spent solvent from the IC and IIB stripping columns was continuously washed and recycled to the extraction. The solvent was washed with 0.20 M $Na_2CO_3$.

The acid recovery unit was not operated during this program.

5.4.3 Uranium Product

The 19.7 tons of uranium recovered from the AECL uranyl nitrate solution was shipped to Y-12 for $UO_3$ preparation. The uranyl nitrate product solution averaged 404 g of uranium per liter and 1.4 M $HNO_3$. The average total metallic ion concentration was 150 ppm of uranium. Iron and silica were the major contaminants, with a total of 109 ppm. The averages of individual metallic ion concentrations are given in Table 5-20.

Table 5-20. Concentration of Metallic Ion in Uranium Products

| Ion | Conc. ppm of U | Ion | Conc. ppm of U |
|---|---|---|---|
| Al | 2 | Si | 25 |
| B | 4 | Cu | 1 |
| Ca | 7 | Ni | 15 |
| Cr | 6 | P | 12 |
| Fe | 84 | Pu | 3 ppb |
| Mg | 1 | Total | 158 |
| Mn | 1 | | |

The gross gamma activity in the uranium product ranged from $1.6 \times 10^3$ to $3 \times 10^4$ c/m/ml and averaged $1.2 \times 10^4$. The fission product activity distribution in the uranium product is given in Table 5-21.

Table 5-21. Fission Product Distribution in Uranium Product

| Shipment No. | U, g/liter | Activity, c/m/ml | | | | | | | |
|---|---|---|---|---|---|---|---|---|---|
| | | Gross β | Gross γ | Ru γ | Zr γ | Nb γ | TRE β | Cs γ | Pu α |
| 1 | 408 | $6.8 \times 10^3$ | $1.7 \times 10^4$ | $8.6 \times 10^3$ | $3.9 \times 10^3$ | $3.1 \times 10^3$ | 388 | 870 | 106 |
| 2 | 409 | $3.3 \times 10^4$ | $3.2 \times 10^4$ | $9.3 \times 10^3$ | $6.0 \times 10^3$ | $1.8 \times 10^4$ | $3.0 \times 10^3$ | $3.0 \times 10^3$ | 205 |
| 3 | 412 | $8.0 \times 10^3$ | $4.9 \times 10^3$ | $1.8 \times 10^3$ | 300 | $2.3 \times 10^3$ | 180 | 113 | < 50 |
| 4 | 408 | $1.3 \times 10^4$ | $7.8 \times 10^3$ | $3.2 \times 10^3$ | $4.8 \times 10^3$ | $1.9 \times 10^3$ | 532 | 698 | < 50 |
| 5 | 413 | $1.8 \times 10^4$ | $3.7 \times 10^3$ | $3.1 \times 10^3$ | 146 | 893 | 303 | 944 | < 50 |
| 6 | 402 | $8.9 \times 10^3$ | $1.6 \times 10^3$ | $1.5 \times 10^2$ | 191 | $1.3 \times 10^3$ | 360 | $1.1 \times 10^3$ | < 50 |
| 7 | 375 | $2.0 \times 10^4$ | $2.0 \times 10^4$ | $4.5 \times 10^3$ | $1.3 \times 10^3$ | $1.2 \times 10^4$ | $1.4 \times 10^3$ | $4.4 \times 10^3$ | 101 |
| Avg. | 404 | $1.5 \times 10^4$ | $1.2 \times 10^4$ | $4.6 \times 10^3$ | $2.4 \times 10^3$ | $5.6 \times 10^3$ | 594 | $1.6 \times 10^3$ | 87 |

5.4.4 Neptunium Recovery

It became apparent during the initial phases of flowsheet development for neptunium recovery that the feed solution should contain at least 2 moles of nitric acid per liter and that the uranium saturation of the solvent should be maintained at about 60 per cent. Under these conditions and with a 3.0 M $HNO_3$ scrub, approximately 95 per cent of the neptunium in the feed solution was recovered in the extraction column (IA).

On one occasion, some freedom was exercised in improvising a flowsheet to provide better decontamination of the uranium from plutonium in a single solvent extraction cycle. A reductant was added to the scrub solution entering the extraction column to reduce the plutonium to the less extractable trivalent state and to observe the effect on neptunium recovery. Unfortunately, the addition of the reductant was accompanied by a simultaneous decrease in the nitric concentration from 2.0 M to 1.25 M in the extraction column raffinate (IAW). During this period both plutonium and neptunium losses to the IAW were high, and the neptunium loss remained high even after the addition of reductant was discontinued. Extraction of the neptunium was resumed when the acid concentration of the raffinate was increased to about 2.0 M by increasing the scrub $HNO_3$ to 3.0 M. The conclusion reached was that the effect of low acid concentration on neptunium extraction was greater than that of the neptunium valence state. This conclusion was supported further by the fact that reduced neptunium was stripped by 1.5 M $HNO_3$ in the partitioning column (IB).

The neptunium and plutonium were separated from the uranium in the partitioning column (IB). The organic stream, which contained uranium, plutonium, and neptunium from the extraction column, was contacted with an aqueous reducing solution (0.04 M $FeSO_4 \cdot (NH_4)_2SO_4$, 0.08 M $NH_2SO_3H$). The flow rate of the reducing solution was controlled to give an aqueous effluent from the partitioning column 1.0 M in $HNO_3$. Under these conditions more than 99 per cent of the neptunium was separated from the uranium, which remained in the solvent phase. During part of the program the nitric acid concentration of the aqueous effluent stream (IBP) was increased to 1.5 M without affecting the uranium-neptunium separation.

The aqueous effluent from the partitioning column was processed through an additional solvent extraction cycle to purify the neptunium from iron that was added to the partitioning solution. The second solvent extraction cycle chemical flowsheet is shown in Table 5-19. It differs slightly from the usual Purex plutonium second cycle flowsheet in that the oxidizing agent (sodium nitrite) was omitted from the feed preparation step. Previous work in the plant indicated that only about 60 per cent of the neptunium in the feed would be recovered if an oxidizing agent was used, and, since only a small quantity of plutonium was involved in the feed, the plant was operated with chemical conditions favoring neptunium recovery. Approximately 95 per cent of the neptunium in the second cycle feed was recovered in the extraction column. The ratio of plutonium to neptunium (alpha counts) in the feed was 333/1. After the second cycle solvent extraction, the ratio of plutonium to neptunium decreased to 3/1. The strip solution (IIBP) containing neptunium plus traces of plutonium and uranium flowed through an ion exchange column (Dowex 50) which sorbed these elements quantitatively. A further separation of neptunium from plutonium was achieved by eluting the resin with a solution containing 0.25 M sulfuric acid and 0.05 M hydroxylamine solution. The neptunium and uranium were removed, leaving the plutonium. The neptunium-uranium eluate was processed by the Chemistry Division to recover approximately 28 g of purified neptunium.*

## 5.5 Argonne National Laboratory Reactor Fuel Processing

During the 72-day period from April 3 to June 14, 1956, 29 tons of uranium was recovered from the Argonne National Laboratory CP-2 and CP-3 reactor fuel. The aluminum-clad CP-3 reactor fuel contained 2.7 tons of uranium and 200 g of plutonium. The uranium oxide fuel from the CP-2 reactor contained 26.5 tons of uranium and trace amounts of plutonium. The aluminum-clad slugs were dissolved continuously and processed through two solvent extraction cycles for uranium and plutonium recovery using standard Purex flowsheet conditions. The uranium dioxide was dissolved continuously and processed through one cycle of solvent extraction to recover uranium only.

### 5.5.1 Feed Preparation

The uranium dioxide was packaged in 2,500 ordinary 1-gal paint cans, each containing approximately 12.5 kg of oxide. Single cans were charged manually to the dissolver through an interlocking system of valves to permit continuous dissolving. The rate of oxide addition to the dissolver was limited to one can at

* "Chemistry Division Progress Report for Period Ending June 20, 1956", G. W. Parker, in ORNL-2171.

20-min intervals to prevent overloading of the dissolver off-gas system. Nitric acid, 6-7 M, was added to the dissolver on liquid-level demand, and the withdrawal rate from the dissolver was adjusted to maintain a specific gravity of 1.54 at 106°C. Under these conditions a feed solution containing 342 g of uranium per liter and 2.35 M in nitric acid was continuously prepared. About 6 moles of acid was added and an average of 2.2 moles of nitric acid was consumed per mole of uranium dissolved. A correction was made for the 6 moles of iron from the can dissolved with each 40 moles of uranium.

On one occasion the dissolver solution became acid deficient and iron oxide precipitated from the uranium solution. This iron precipitate was insoluble in nitric acid and soluble in hydrochloric acid.

The aluminum-jacketed CP-3 slugs were dissolved continuously in 6-7 M $HNO_3$ containing 0.005 M $Hg(NO_3)_2$. Dissolution acid was supplied to the dissolver on liquid level demand as the equilibrium dissolver solution was pumped from the dissolver to the feed tanks. Slugs were charged to the dissolver at the rate of 16 per hour to maintain a dissolution rate of 0.5 ton/day.

### 5.5.2 Solvent Extraction

Feed prepared from the CP-3 uranium slugs contained about 50 g of plutonium per ton of uranium and was sufficiently high in fission product activity to require two cycles of solvent extraction for purification and recovery of the uranium and plutonium. The fission product activity level in this feed solution is given in Table 5-22.

Table 5-22. Fission Product Activity Distribution in Feed Prepared from ANL CP-3 Fuel

| Activity,[a] c/m/ml | | | | | | | |
|---|---|---|---|---|---|---|---|
| Gross β | Gross γ | Ru γ | Zr γ | Nb γ | TRE β | Cs γ | Pu α |
| $3.9\times10^7$ | $3.0\times10^7$ | $2.5\times10^5$ | $6.1\times10^4$ | $1.4\times10^5$ | $1.6\times10^7$ | $2.7\times10^7$ | $1.6\times10^6$ |

[a]Activity measured April 13, 1956. Uranium concentration was 270 g/liter.

The chemical flowsheet conditions for processing ANL CP-3 fuel through two cycles of solvent extraction were essentially the same as those used for processing the ORNL and BNL slugs (Sec. 5.1.2). The actual stream flows and concentrations are given in Table 5-23.

Table 5-23. Actual Chemical Flowsheet for ANL CP-3 Fuel Processing

| Entering Stream | Flow, gal/hr | Composition |
|---|---|---|
| IAF | 14.5 | 275 g/liter U, 1.95 M $HNO_3$, $1.61 \times 10^6$ Pu α c/m/ml |
| IAS | 9.6 | 3.0 M $HNO_3$ |
| IAX | 58.0 | 30% TBP |
| IBX | 10.6 | 0.04 M $Fe^{++}$, 0.08 M sulfamic acid |
| IBS | 15.3 | 30% TBP |
| ICX | 105 | Demineralized water |
| IDF | 11.2 | 355.5 g/liter U, 2.06 M $HNO_3$ |
| IDS | 11.1 | 2.5 M $HNO_3$ |
| IDX | 57.5 | 30% TBP |
| IEX | 68 | Demineralized water |
| IIAF | 20.7 | 6.0 M $HNO_3$, 0.1 M $NaNO_2$ |
| IIAS | 2.0 | 0.5 M $HNO_3$ |
| IIAX | 5.0 | 30% TBP |
| IIBX | 6.2 | 0.05 M $(NH_2OH)_2 \cdot H_2SO_4$ |
| SRS | 9.5 | 0.1 M $HNO_3$ |
| CWC | 16.0 | 0.125 M $Na_2CO_3$ |

Feed prepared from the ANL CP-2 reactor oxide fuel contained fission product activity and plutonium in small amounts, and one cycle of solvent extraction processing was used to recover purified uranium. The gross β and gross γ activity in the oxide feed solutions averaged $6.5 \times 10^4$ and $3 \times 10^4$ c/m/ml, respectively, and the solution contained 338 g of uranium per liter and was 2.13 M in $HNO_3$. The fission product activity spectrum in the feed prepared from the ANL CP-2 reactor fuel is given in Table 5-24.

Table 5-24. Composition of Feed Prepared from ANL CP-2 Fuel

| Constituent | Concentration |
|---|---|
| Gross β | $6.5 \times 10^4$ c/m/ml |
| Gross γ | $3 \times 10^4$ c/m/ml |
| Pu α | $2 \times 10^3$ c/m/ml |
| U | 338 mg/ml |
| $HNO_3$ | 2.13 M |

A revised chemical flowsheet was used to process the CP-2 reactor fuel feed. Ferrous iron was added to the extraction column scrub stream to remove traces of plutonium, and 0.2 M $HNO_3$ solution was pumped to the former plutonium-uranium partitioning column to remove metallic ion impurities from the uranium prior to stripping. Actual flow rates and chemical composition of entering stream are given in Table 5-25.

Table 5-25 Chemical Flowsheet for ANL CP-2 Fuel Processing

| Entering Stream | Flow, gal/hr | Composition |
|---|---|---|
| IAF | 13.4 | 338.4 g/liter U, 2.13 M $HNO_3$, $1.5 \times 10^3$ Pu $\gamma$ c/m/ml |
| IAS | 10.1 | 3.0 M $HNO_3$, 0.02 M $Fe^{++}$ |
| IAX | 57.5 | 30% TBP |
| IBS | 15.3 | 30% TBP |
| IBX | 9.5 | 0.2 M $HNO_3$ |
| ICX | 106 | Demineralized water |
| SRS | 9.5 | 0.1 M $HNO_3$ |
| CWC | 16.1 | 0.125 M $Na_2CO_3$ |

### 5.5.3 Plutonium Product from ANL CP-3 Fuel Processing

The 200 g of plutonium recovered from the ANL CP-3 fuel was isolated by resin column sorption in the usual manner (see Sec. 5.1.3). The plutonium was sorbed on a resin column that contained approximately 300 g of plutonium from a previous program, and then the loaded column was eluted. This plutonium eluate contained 28.6 g of plutonium per liter and was 5.3 M in $HNO_3$.

### 5.5.4 Uranium Product from ANL CP-3 Fuel Processing

The 2.7 tons of uranium recovered from the ANL CP-3 reactor fuel was shipped in a single shipment. This two-cycle uranyl nitrate solution contained 409 g of uranium per liter and was 1.4 M in $HNO_3$. The gross $\beta$ and gross $\gamma$ activity was $1 \times 10^4$ c/m/ml and there were 6 ppb of plutonium in the uranium. The metallic ion concentrations in this product solution are given in Table 5-26.

Table 5-26. Metallic Ion Concentration in Uranium Product from ANL CP-3 Fuel Processing

| Components | Concentration, ppm of U |
|---|---|
| Al | 2 |
| B | 2 |
| Ca | 2 |
| Cr | 6 |
| Fe | 87 |
| Mg | 0.1 |
| Si | 0.2 |

5.5.5 Uranium Product from ANL CP-2 Fuel Processing

The 26.5 tons of one-cycle uranyl nitrate product solution from the ANL CP-2 reactor fuel was shipped in eight lots. The average concentration was 420.5 g of uranium per liter and 0.3 M $HNO_3$; the average gross $\gamma$ activity was $2.6 \times 10^3$ c/m/ml and the plutonium contamination averaged 2 ppb of uranium. The metallic ion concentrations are listed in Table 5-27.

Table 5-27. Metallic Ion Concentrations in Uranium Product from ANL CP-2 Fuel Processing

| Metals | Concentration, ppm of U |
|---|---|
| Ca | 9 |
| Cr | 2 |
| Fe | 16 |
| Mg | 1 |
| Si | 3 |
| Al | 10 |
| B | 2 |

## 6.0 OPERATIONAL COST AND MAN-POWER REQUIREMENTS

The gross operating costs for conducting the Metal Recovery Plant activities for the one-year period between July 1, 1955 and July 1, 1956, was $693,000. This cost includes labor, materials, and overhead for all supporting groups such as analytical chemistry, health physics, and maintenance. Charges for capital investments, depreciation of equipment, taxes, inventories, etc., are not reflected in this cost report. A breakdown of the annual operating costs is given in Table 6-1.

Table 6-1. Operational Cost Summary

| Distribution | Cost | Per Cent of Total Cost |
|---|---|---|
| Direct labor for plant operation | $152,400 | 22.0 |
| Engineering and maintenance | 62,048 | 9.0 |
| Analytical chemistry | 85,725 | 12.4 |
| Chemicals, clothing, and misc. supplies | 102,245 | 14.7 |
| Worked material[a] | 70,920 | 11.3 |
| Expense allocation | 160,096 | 22.2 |
| Health physics service | 27,702 | 4.0 |
| Chemical Technology Division research and development | 24,153 | 3.4 |
| Research Director's Department | 7,326 | 1.0 |
| | $692,615 | 100.0 |

[a]Includes cost for air, electricity, SS material control, steam, water, and waste storage.

Twenty-two men were required to operate the plant continuously; the operating staff consisted of four shifts of three operators plus a foreman, two technicians, and four technical supervisors.

The analytical chemistry cost of $85,725 includes the labor and materials used in performing 22,793 control analyses. The sample load ranged from 1400 to 2900 per month and averaged 1899 per month.

Of the $102,245 spent for chemical, clothing, and miscellaneous supplies, $94,000 was spent principally for nitric acid, ferrous ammonium sulfate, sulfamic acid, and sodium hydroxide. Approximately $6,000 was spent for protective clothing.

The $62,048 spent for engineering and maintenance includes costs of equipment changes made to accommodate the processing of four distinct types of feed material during the seven separate programs. These costs also include the fabrication and installation of experimental equipment. The four craftsmen (pipefitter, welder, electrician, millwright) stationed in the building on the day shift to perform routine maintenance contributed to the total labor used in equipment changes.

Of the total craft labor used, the pipefitter (24.7%) and millwright (21.6%) were the major expense. A breakdown of the usage of craft labor is given in Table 6-2.

Table 6-2. Craft Labor Usage

| Craft | Per Cent of Total Craft Hours Worked | Craft | Per Cent of Total Craft Hours Worked |
|---|---|---|---|
| Pipefitter | 22.6 | Utility | 2.5 |
| Millwright | 22.6 | Machinist | 2.0 |
| Welder | 12.0 | Carpenter | 2.0 |
| Electrician | 9.0 | Leadburner | 1.7 |
| Transportation | 7.7 | Sheet Metal | 0.6 |
| Laborer | 5.9 | Refrigeration | 0.4 |
| Instrument Mechanic | 5.4 | Painter | 0.3 |
| Rigger | 5.3 | TOTAL | 97.0 |

# 7.0 APPENDIX

## 7.1 Equipment Flowsheet

Figure 7-1 shows a schematic equipment flowsheet.

## 7.2 Chemical Flowsheet

Figures 7-2, 3, 4, and 5 show the chemical flowsheet used to process ORNL graphite reactor fuel.

## 7.3 Column Data

The column sizes and pulse characteristics were:

| | Column Dimensions | | | | |
|---|---|---|---|---|---|
| | | | | Pulse | |
| Column | Section | Diameter, in. | Height, ft | Amplitude, in. | Frequency, IPS |
| A | Extraction | 6.625 | 20 | 1.1 | 53 |
| | Scrub | 6.625 | 16 | 1.1 | 53 |
| B | Partitioning | 6.625 | 15 | 0.77 | 43 |
| | Scrub | 6.625 | 15 | 0.77 | 43 |
| C | Strip | 9.625 | 22 | 0.85 | 49 |
| D | Extraction | 6 IPS | 12.5 | 1.2 | 72 |
| | Scrub | 6 IPS | 12 | 1.2 | 72 |
| E | Strip | 8 IPS | 20 | 1.1 | 66 |
| IIA | Extraction | 4 IPS | 18 | 1.5 | 75 |
| | Scrub | 4 IPS | 6 | 1.5 | 75 |
| IIB | Strip | 2.5 IPS | 23.5 | 0.8 | 62 |
| Solvent wash ($Na_2CO_3$) | | 8 | 20 | 0.7 | 39 |
| Solvent wash ($HNO_3$) | | 5.5 | 16 | not pulsed | |

## 7.4 Methods of Counting and Calculating Activities

### 7.4.1 Counting Methods

Gamma Counting. All gamma activities were determined with a Model SU-1 scintillation counter built by the Nuclear Measurements Corporation. A 5.0 g/cm$^2$ lead absorber was inserted between the thallium iodide--activated sodium iodide detector and the sample.

Alpha Counting. Alpha emissions were counted at 52 per cent geometry by methane proportional counters.

Beta Counting. Beta radiation was measured at 10.18 per cent geometry with a helium-filled G.M. (Tracerlab) counter.

### 7.4.2 Method of Calculation

Fission product activities were corrected for radioactive decontamination between sampling time and counting time. The background activities of uranium and plutonium, as measured by ORNL Analytical Chemistry Division, are:

U-238

Alpha: 757 c/m/mg (varies depending on amounts of U-235 and U-234 present)

Beta: 75 c/m/mg at equilibrium; 2 c/m/mg immediately after separation

Gamma: Scintillation, 5 g/cm$^2$ Pb absorber, 8 c/m/mg; G.M. counter, not detectable

Pu-239

Alpha: $7.1 \times 10^7$ c/m/mg (varies with irradiation level)

Beta: $2.0 \times 10^4$ c/m/mg (uranium irradiated to 400-700 g of plutonium per ton)
$2.7 \times 10^4$ c/m/mg (uranium irradiated to 700-1500 g of plutonium per ton)

Gamma: Scintillation, 5 g/cm$^2$ Pb absorber, 1.205 c/m/mg

ORNL-LR Dwg. 4215 R-1
NOT CLASSIFIED

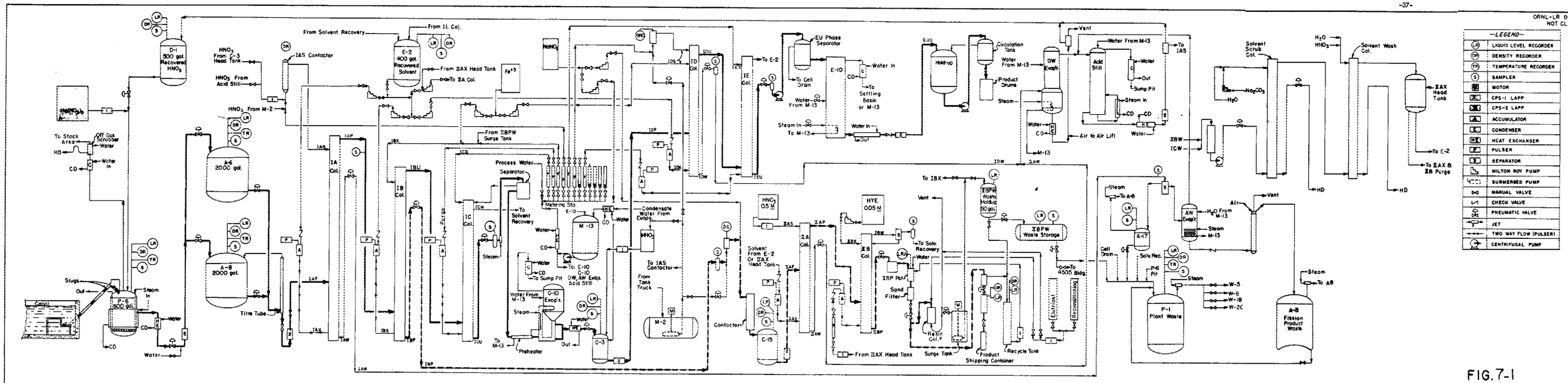


—LEGEND—

| | |
|---|---|
| LR | LIQUID LEVEL RECORDER |
| DR | DENSITY RECORDER |
| TR | TEMPERATURE RECORDER |
| S | SAMPLER |
| M | MOTOR |
| CPS-1 | CPS-1 LAPP |
| CPS-2 | CPS-2 LAPP |
| A | ACCUMULATOR |
| C | CONDENSER |
| HX | HEAT EXCHANGER |
| P | PULSER |
| S | SEPARATOR |
| | MILTON ROY PUMP |
| | SUBMERGED PUMP |
| | MANUAL VALVE |
| | CHECK VALVE |
| | PNEUMATIC VALVE |
| | JET |
| | TWO WAY FLOW (PULSER) |
| | CENTRIFUGAL PUMP |

FIG. 7-1
METAL RECOVERY PLANT
EQUIPMENT FLOWSHEET

4215 R1

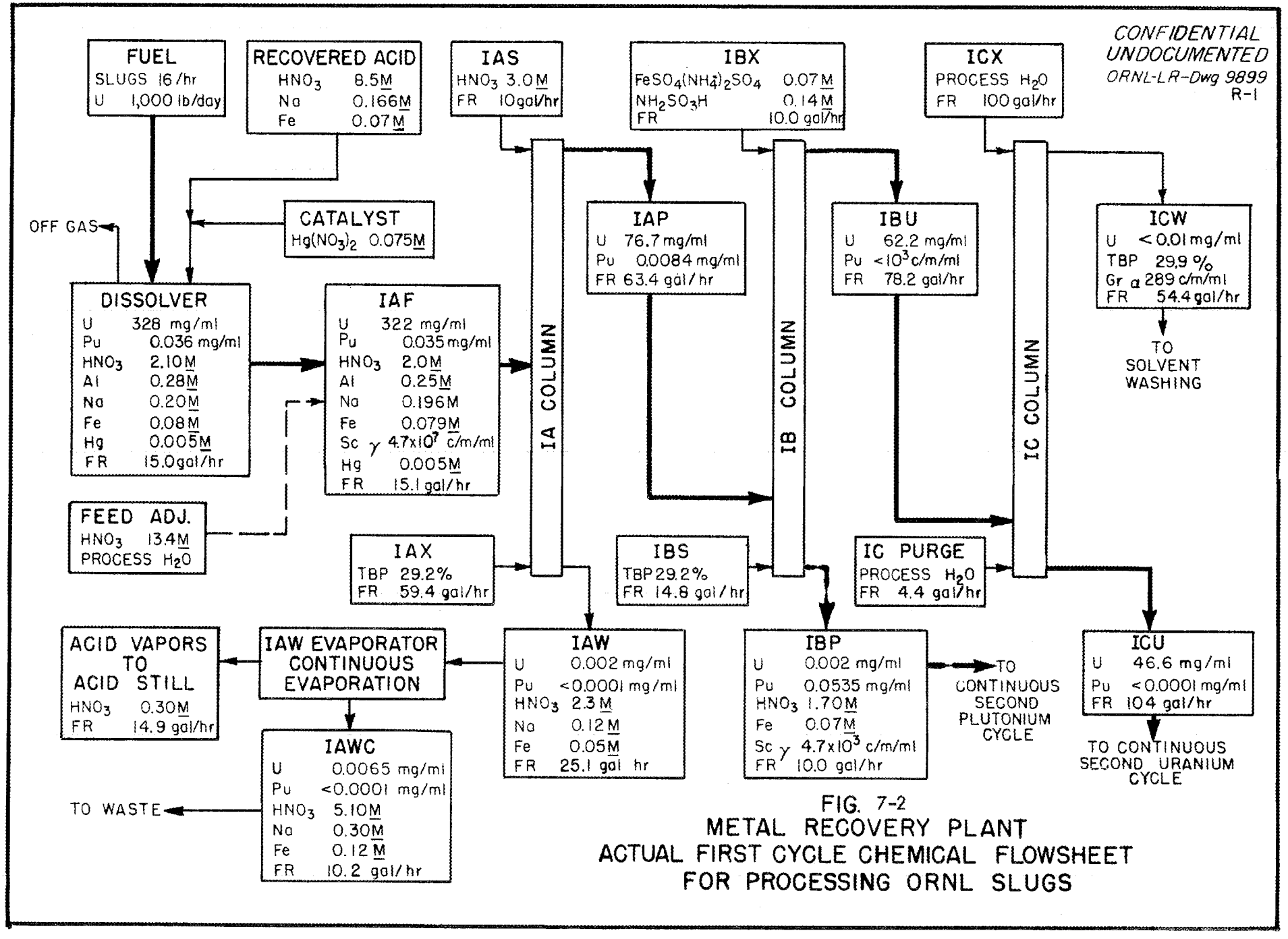


FIG. 7-2
METAL RECOVERY PLANT
ACTUAL FIRST CYCLE CHEMICAL FLOWSHEET
FOR PROCESSING ORNL SLUGS

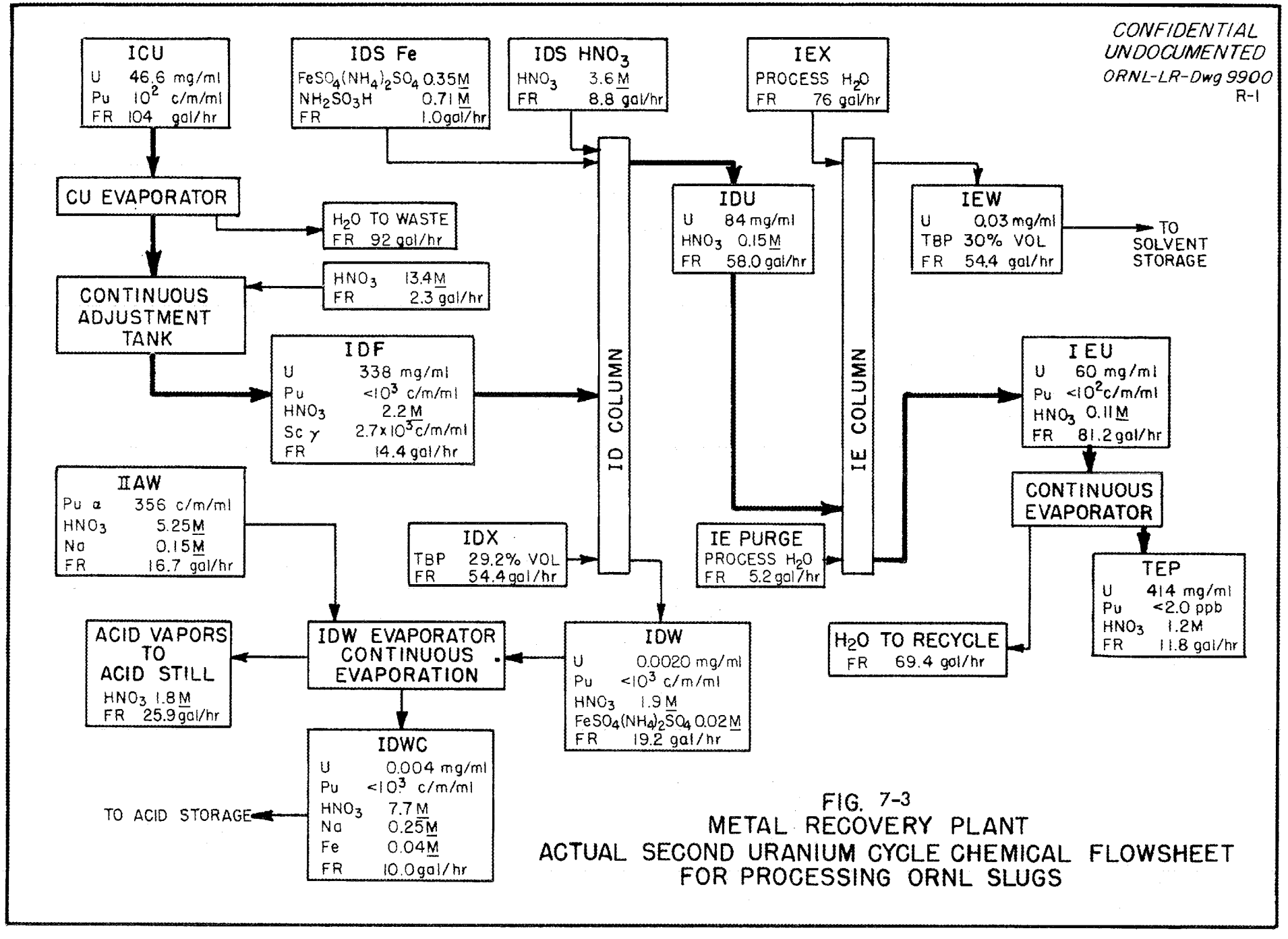


FIG. 7-3
METAL RECOVERY PLANT
ACTUAL SECOND URANIUM CYCLE CHEMICAL FLOWSHEET
FOR PROCESSING ORNL SLUGS

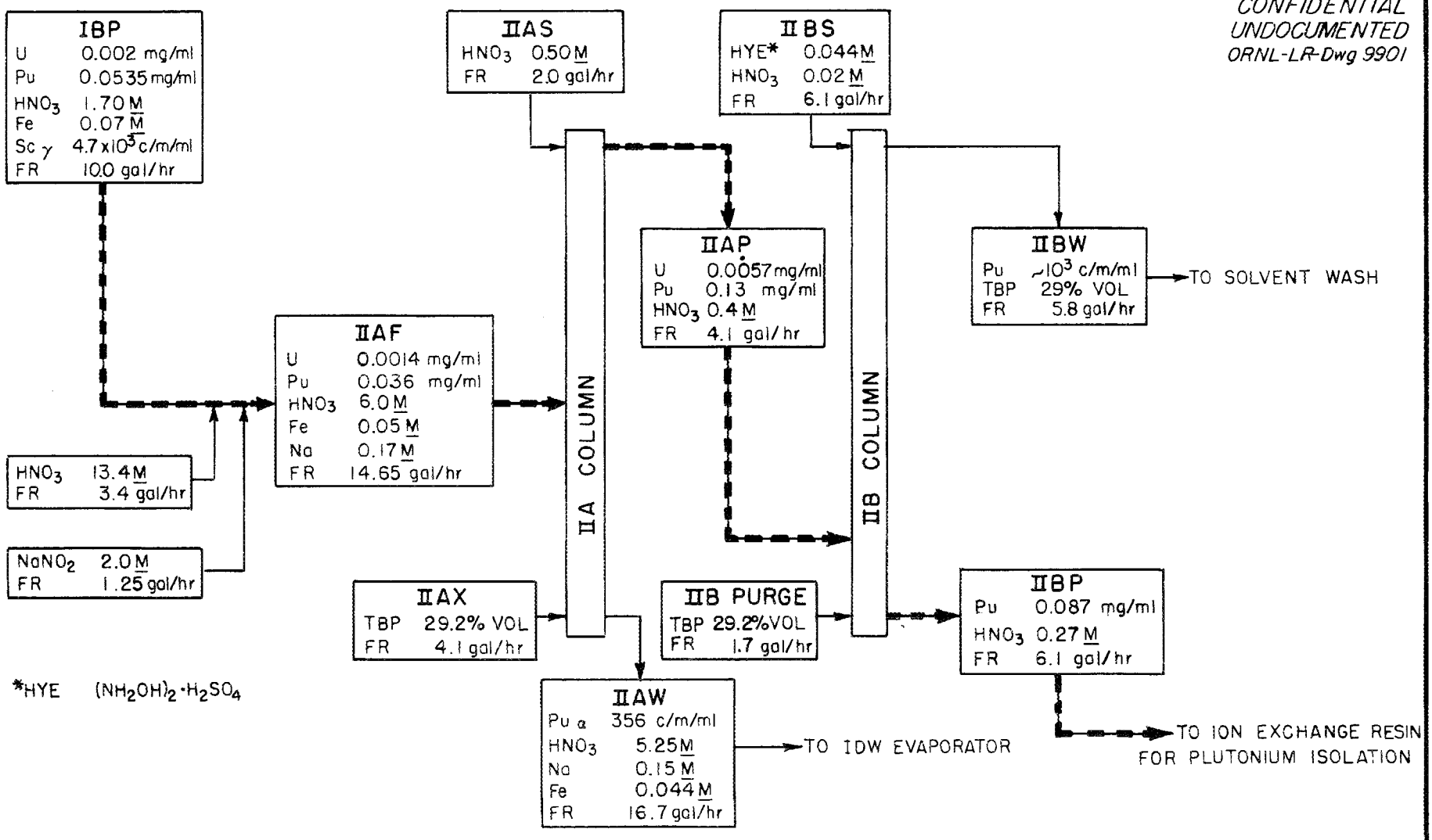


FIG. 7-4

METAL RECOVERY PLANT
ACTUAL SECOND PLUTONIUM CYCLE CHEMICAL FLOWSHEET
FOR PROCESSING ORNL SLUGS

CONFIDENTIAL
UNDOCUMENTED
ORNL-LR-Dwg 9902
R-1

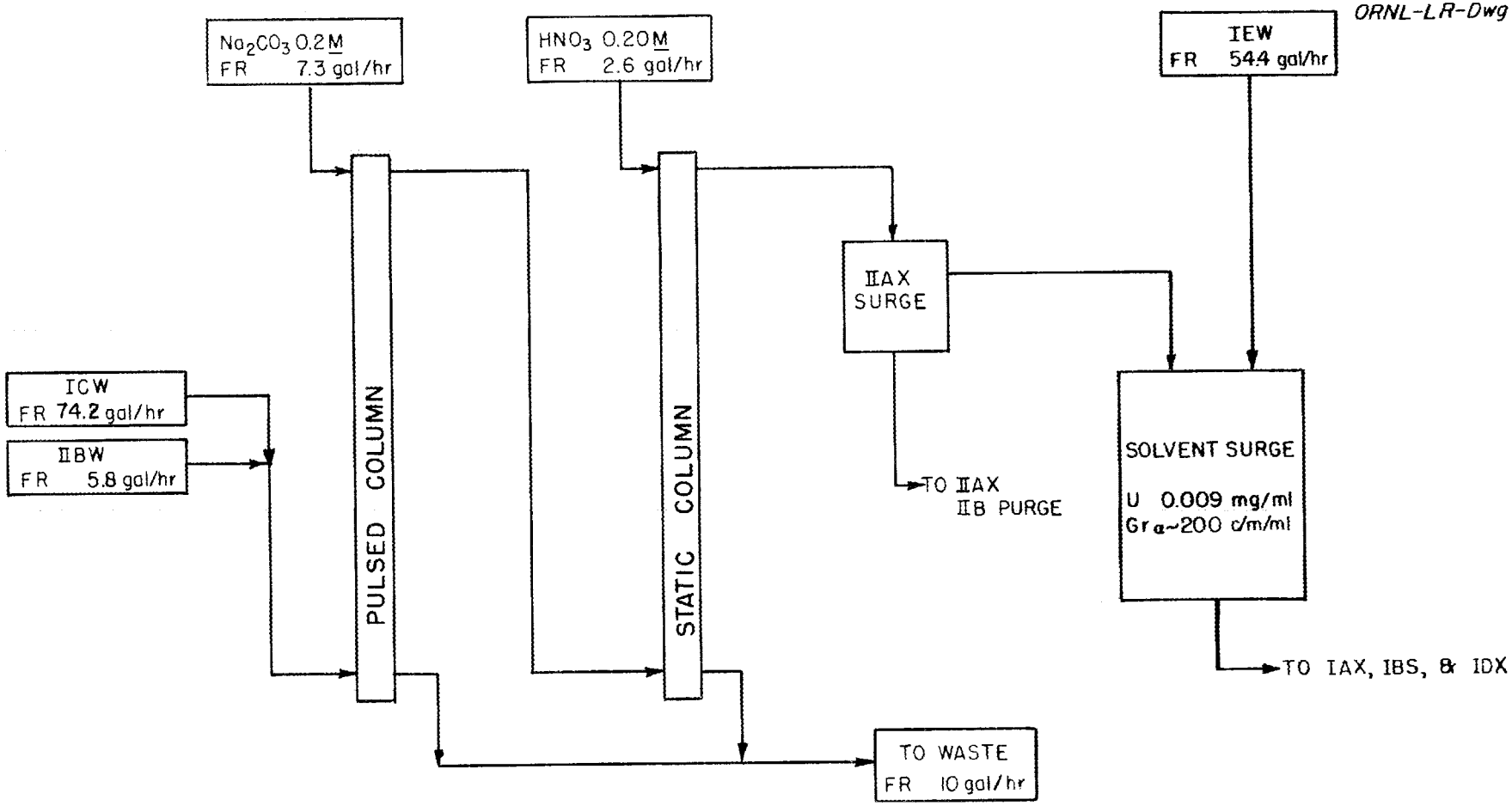


FIG. 7-5
METAL RECOVERY PLANT
ACTUAL SOLVENT WASHING CHEMICAL FLOWSHEET
FOR PROCESSING ORNL SLUGS