[redacted]

Cy. 4

CENTRAL RESEARCH LIBRARY
DOCUMENT COLLECTION

AEC RESEARCH AND DEVELOPMENT REPORT

ORNL-2361
Chemistry-Separation Processes for Plutonium and Uranium

MARTIN MARIETTA ENERGY SYSTEMS LIBRARIES
3 4456 0350520 4

Classification Cancelled
Or Changed To
By Authority Of RCA 9/3/71
By E. Goldberg Date 11/11/71

CHEMICAL TECHNOLOGY DIVISION

MONTHLY PROGRESS REPORT

MAY 1957

CENTRAL RESEARCH LIBRARY
DOCUMENT COLLECTION
LIBRARY LOAN COPY
DO NOT TRANSFER TO ANOTHER PERSON
If you wish someone else to see this document, send in name with document and the library will arrange a loan.

[redacted]

OAK RIDGE NATIONAL LABORATORY
OPERATED BY
UNION CARBIDE NUCLEAR COMPANY
A Division of Union Carbide and Carbon Corporation
UCC
POST OFFICE BOX X · OAK RIDGE, TENNESSEE

[redacted]

Printed in USA. Charge 70 cents. Available from the U. S. Atomic Energy Commission, Technical Information Extension, P. O. Box 1001, Oak Ridge, Tennessee. Please direct to the same address inquires covering the procurement of other classified AEC reports.

LEGAL NOTICE

This report was prepared as an account of Government sponsored work. Neither the United States, nor the Commission, nor any person acting on behalf of the Commission:

A. Makes any warranty or representation, express or implied, with respect to the accuracy, completeness, or usefulness of the information contained in this report, or that the use of any information, apparatus, method, or process disclosed in this report may not infringe privately owned rights; or

B. Assumes any liabilities with respect to the use of, or for damages resulting from the use of any information, apparatus, method, or process disclosed in this report.

As used in the above, "person acting on behalf of the Commission" includes any employee or contractor of the Commission to the extent that such employee or contractor prepares, handles or distributes, or provides access to, any information pursuant to his employment or contract with the Commission.

[redacted]

ORNL-2361

Contract No. W-7405-eng-26

CHEMICAL TECHNOLOGY DIVISION

MONTHLY PROGRESS REPORT

for May 1957

F. L. Culler	- Division Director
F. R. Bruce	- Associate Director
D. E. Ferguson	- Chemical Development Section A Chief
R. E. Blanco	- Chemical Development Section B Chief
K. B. Brown	- Chemical Development Section C Chief
J. C. Bresee	- Unit Operations Section Chief
H. E. Goeller	- Process Design Section Chief
R. B. Lindauer	- Pilot Plant Section Chief

DATE ISSUED

SEP 11 1957

OAK RIDGE NATIONAL LABORATORY
Operated by
UNION CARBIDE NUCLEAR COMPANY
A Division of Union Carbide and Carbon Corporation
Post Office Box X
Oak Ridge, Tennessee

[redacted]

MARTIN MARIETTA ENERGY SYSTEMS LIBRARIES

3 4456 0350520 4

[redacted]

ORNL-2361
Chemistry-Separation Processes
for Plutonium and Uranium
M-3679 (20th ed.)

INTERNAL DISTRIBUTION

1. C. E. Center
2. Biology Library
3. Health Physics Library
4-5. Central Research Library
6. Reactor Experimental Engineering Library
7-11. Laboratory Records Department
12. Laboratory Records, ORNL R.C.
13. A. M. Weinberg
14. L. B. Emlet (K-25)
15. J. P. Murray (Y-12)
16. J. A. Swartout
17. E. H. Taylor
18. E. D. Shipley
19-20. F. L. Culler
21. M. L. Nelson
22. W. H. Jordan
23. C. P. Keim
24. J. H. Frye, Jr.
25. S. C. Lind
26. A. H. Snell
27. A. Hollaender
28. K. Z. Morgan
29. M. T. Kelley
30. M. E. Whatley
31. R. S. Livingston
32. A. S. Householder
33. C. S. Harrill
34. C. E. Winters
35. D. W. Cardwell
36. D. Phillips
37. W. K. Eister
38. F. R. Bruce
39. D. E. Ferguson
40. R. B. Lindauer
41. H. E. Goeller
42. R. A. Charpie
43. J. A. Lane
44. M. J. Skinner
45. R. E. Blanco
46. G. E. Boyd
47. W. E. Unger
48. R. R. Dickison
49. A. T. Gresky
50. C. W. Hancher
51. E. D. Arnold
52. C. E. Guthrie
53. J. W. Ullmann
54. K. B. Brown
55. K. O. Johnsson
56. H. M. McLeod
57. J. C. Bresee
58. R. B. Briggs
59. D. S. Billington
60. S. J. Cromer
61. W. D. Burch
62. R. E. Brooksbank
63. W. H. Carr
64. J. W. Landry
65. W. H. Lewis
66. E. M. Shank
67. W. E. Clark
68. O. C. Dean
69. J. R. Flanary
70. I. R. Higgins
71. J. E. Savolainen
72. R. P. Milford
73. E. L. Nicholson
74. W. R. Winsbro
75. R. E. Leuze
76. R. A. McNees
77. J. P. McBride
78. R. H. Rainey
79. G. I. Cathers
80. C. F. Coleman
81. D. J. Crouse
82. J. T. Long
83. C. D. Watson
84. R. B. Korsmeyer
85. E. L. Compere
86. P. A. Haas
87. J. L. Fowler
88. W. W. Weinrich (consultant)
89. M. D. Peterson (consultant)
90. D. L. Katz (consultant)
91. G. T. Seaborg (consultant)
92. M. Benedict (consultant)
93. C. E. Larson (consultant)
94. L. Squires (consultant)
95. J. H. Rushton (consultant)
96. ORNL - Y-12 Technical Library, Document Reference Section

[redacted]

[redacted]

EXTERNAL DISTRIBUTION

97. Division of Research and Development, AEC, ORO
98. American Machine and Foundry Company (C. J. Brous)
99-100. Argonne National Laboratory (1 copy ea. to Lawroski and Manning)
101-108. Atomic Energy Commission, Washington (1 copy ea. to E. Anderson, R. C. Dalzel, S. G. English, F. Kerze, Jr., M. B. Kratzer, D. R. Miller, N. N. Munster, and S. B. White)
109-110. Atomic Energy Commission, Oak Ridge (1 copy ea. to D. F. Cope and R. B. Martin)
111-113. Atomic Energy Commission, Washington, Division of Raw Materials
114. Battelle Memorial Institute (C. L. Peterson)
115-116. Brookhaven National Laboratory (1 copy ea. to L. G. Stang and L. P. Hatch)
117. Bureau of Mines, Salt Lake City
118. Carter Laboratories
119. Columbia University (Hassialis)
120. Dow Chemical Company, Rocky Flats (Matherson)
121. duPont Company, Wilmington (Worthington)
122-123. duPont Company, Aiken (1 copy ea. to E. Cole and M. Wahl)
124-125. Hanford Operations Office (1 copy ea. to Cooper and Tomlinson)
126. Houdry Process Corporation (Alex Oblad)
127. Ionics, Inc. (W. Juda)
128-129. Los Alamos Scientific Laboratory (1 copy ea. to R. D. Baker and R. P. Hammond)
130. National Lead Company of Ohio (Cuthbert)
131. National Lead Company, Winchester (Brettenstein)
132. Naval Radiation Laboratory (Ballou)
133-135. Phillips Petroleum Company (NRTS) (1 copy ea. to C. E. Stevenson, D. Reid and C. Slansky)
136-137. North American Aviation, Inc. (1 copy ea. to Library and C. Starr)
138. Sylvania Electric Products, Inc.
139. University of Utah (M. A. Cook)
140. Union Carbide Nuclear Company (K-25 Plant) (D. M. Lang)
141. Union Carbide Nuclear Company (Y-12 Plant) (R. Hibbs)
142. Union Carbide Nuclear Company (C-31 Plant) (R. G. Jordan)
143. University of California Radiation Laboratory, Livermore (K. Street)
144. Vitro Engineering Division (W. Pings)
145-147. Westinghouse, PARP
148-33[illegible]. Given distribution as shown in M-3679 (20th ed.) under Chemistry-Separation Processes for Plutonium and Uranium category

[redacted]

[redacted]

CONTENTS

Page

Part I. FEED MATERIALS PROCESSING

1.0 Metallex Process 7

2.0 Fluorox Process 11

3.0 Excer Process 19

Part II. HETEROGENEOUS POWER REACTOR FUEL REPROCESSING

4.0 Head-end Treatments for Solvent Extraction Processing 29

5.0 Solvent Extraction Studies 44

6.0 Metal Recovery Plant, Uranium and Neptunium 48

7.0 Thorex Process 49

8.0 Nonaqueous Processes 55

Part III. AQUEOUS HOMOGENEOUS REACTOR FUEL AND BLANKET PROCESSING AND DEVELOPMENT

9.0 HRT Chemical Plant 64

10.0 Uranyl Sulfate Fuel Processing 68

11.0 Uranyl Sulfate Blanket Processing 79

12.0 Thorium Oxide Slurries 80

Part IV. CHEMICAL ENGINEERING RESEARCH

13.0 Ion Exchange Studies 93

14.0 Hydroclone Development Studies 99

15.0 Appendix 104

[redacted]

RELATED PROGRESS REPORTS (LAST SIX MONTHS)

	Feed Materials Processing	Power Reactor Fuel Processing
Nov. 1956	ORNL-2227 (25¢)	ORNL-2228 (35¢)
Dec. 1956	ORNL-2246 (in press)	ORNL-2247 (in press)

CTD Monthly Progress Reports

Jan. 1957	ORNL-2251 (55¢)
Feb. 1957	ORNL-2270 (70¢)
March 1957	ORNL-2307 (60¢)
April 1957	ORNL-2324 (55¢)

Homogeneous Reactor Project

For quarter ending:	Oct. 31, 1956	ORNL-2222 ($1.10)
	Jan. 31, 1957	ORNL-2272 ($1.10)
	Apr. 30, 1957	ORNL-2331 (in press)

All studies reported here are preliminary and conclusions are subject to change. The information is published as a formal report only to permit ready dissemination of data to interested persons.

ABSTRACT*

I. FEED MATERIALS PROCESSING

Metallex Process. In reduction runs in the large-scale continuous apparatus, changing the thorium production rates from 1.5 to 2.6 lb/hr did not affect the percentage reduction of $ThCl_4$ to metal. From 8385 lb of thorium amalgam produced in four runs, 27 lb of thorium amalgam was recovered. The bulk density of the massive metal was low.

The best method thus far tested for removing by-products and other impurities from the thorium amalgam is filtration of the washed amalgam through an amalgamated barrier followed by application of a vacuum. The bulk density of massive metal from amalgam thus treated was 10.05 g/cc, with a voidage of 13.9%. Bulk densities of massive metal obtained in other treatments were 7.6-9.9 g/cc and voidages were 15-28%.

Fluorox Process. Data from all fluid-bed reactor studies were reviewed and compared with laboratory data obtained from thermobalance measurements. Results were in fair agreement in the regions of greatest practical operating interest. Installation of modified equipment for the fluidized and flame reactors is essentially complete.

---

*Work on raw materials processing, Chemical Development Section C, K. B. Brown, Section Chief, is reported separately.

Excer Process. Equipment for continuous precipitation, with a daily capacity of 25 lb of $UF_4 \cdot 3/4H_2O$, was designed and installed. In two dehydration runs in the continuous fluidized-bed equipment at 350 ± 25°C, the UF_4 products met specifications for all impurities except carbon. In both laboratory (gram) scale runs and the fluidized-bed runs, the rates of removal of both water and carbon were initially rapid.

In further laboratory tests on iron reduction of UO_2Cl_2 to UCl_4, the rate of the reaction did not change with uranium concentrations of 50-180 g/liter.

II. HETEROGENEOUS POWER REACTOR FUEL REPROCESSING

Head-end Treatments. In Darex dissolution studies, dissolver product metal concentrations increased as the ratio of acid feed rate to surface area increased. The hydrogen ion consumption rate was independent of but the nitrate consumption rate varied with the feed acid composition. Stripping of the chloride from the dissolver product with dilute nitric acid required many more stages than with the azeotrope to reduce the chloride concentration to 85 ppm. Chloride loss with the dilute nitric acid strip was ~20%. Corrosion studies indicated that titanium can be used for constructing Darex equipment. Titanium failed in atmospheres containing HCl and essentially no HNO_3 or oxides of nitrogen; tests for hydrogen embrittlement in the dissolver were inconclusive and are continuing. Rolled Haynes 21 performed relatively well in most Darex solutions.

In Zircex process studies the hydrochlorination rate of Zircaloy-2 with HCl gas at 474°C at anhydrous HCl partial pressures of 0.45 and 0.198 were 0.91 mg/cm^2/min and 0.63 mg/cm^2/min, respectively. A design study indicated that the hydrochlorination temperature may be controlled by recirculation of solid $ZrCl_4$. Rolled Haynes 21 performed relatively well in most Zircex solutions.

Aqueous Dissolution. Preliminary experiments indicated that aqueous HF will strip zirconium or zircaloy-2 claddings from UO_2, 90%U—10% Mo and 90% U—10% Nb cores, but not from 98% U—2% Zr cores. With the U-Zr alloy voluminous amounts of insoluble UF_4 formed. The other core materials were attacked only very slowly by HF, ~0.1 mg/min/cm^2, while the claddings dissolved at practicable rates, >175 mg/min/cm^2. Core dissolution rates were consistently higher in 5 M HF than in 12 M at 90°C. The temperature coefficient of dissolution in 2 M acid was negative for UO_2 and for 90% U—10% Mo alloy.

Sulfuric acid dissolution of stainless steel claddings may be feasible. The stainless steel cladding of an APPR fuel element dissolved in 6 M H_2SO_4 at a rate of 4.53 mg/min/cm^2 with a uranium loss from the UO_2 core of ~0.5%.

Zircaloy-2 was dissolved anodically in 3 N HCl with and without addition of various amounts of HF and hydrogen peroxide. Current efficiencies decreased with time and varied between 95 and 178%. A black metallic sludge formed, which amounted to about 1.1% of the total zirconium.

In scouting experiments on anion-exchange head-end treatment of simulated fluoride solutions of uranium fuel elements, >99.9% of the uranium was sorbed from fluoride solutions of concentrations up to 6 M. Zirconium and niobium together with 2% of the iron present were sorbed but none of the nickel, chromium, or manganese. Plutonium (IV) was sorbed from 2 M fluoride solution. Addition of chloride to >6 M and reduction of the fluoride to 2 M resulted in sorption of the uranium but not zirconium or niobium. Both U(IV) and U(VI) were sorbed from solutions of chloride more concentrated than 8 M. None of the fission or corrosion products were sorbed.

From a sulfate solution uranyl ion was sorbed on anion-exchange resin together with zirconyl. Plutonium (IV) was weakly sorbed but none of the stainless steel components.

Aluminum jackets of reactor grade Savannah River slugs were not successfully removed from the slug by rolling operations with a Mackintosh-Hemphill Derodding Machine. Reject slugs were dejacketed. Uranium loss was 0.07%. Fuels of the Yankee Atomic reactor type were decladded by this means. A number of newly designed fuel mechanical processing devices are reviewed.

Solvent-extraction Studies. Results of batch countercurrent tests in 0.75-in.-dia pulsed columns of a proposed Purex type solvent-extraction flowsheet for processing a nitric acid solution of the U-Mo core of the APDA fuel element indicated satisfactorily high decontamination factors and low uranium and plutonium losses. Hydrofluoric acid removal of the zirconium cladding was assumed.

The ORNL Co-60 garden was calibrated and irradiation of organic solvent diluent mixtures was started.

Waste Metal Recovery. Eight tons of uranium and 3.54 g of neptunium were recovered from Canadian uranyl nitrate solution by a modified Purex process. Neptunium recovery was 91.8%, with 4.4% lost in the first cycle aqueous waste and 3.8% remaining with the uranium product. During the last part of the program the addition of $NaNO_2$ to the feed and heating resulted in 99.5% neptunium recovery.

The recovery of 1900 lb of depleted uranium and 19 g of neptunium from 3188 lb of K-25 fluorination ash was completed. The ash was prepared for extraction by dissolution in 1 M $Al(NO_3)_3$—1 M HNO_3.

Thorex Process. Pilot Plant run HD-25 was terminated after 610 hr of intermittent operation. The feed preparation equipment was decontaminated, and plant modifications for processing short-decayed irradiated thorium were started. About 1300 kg of thorium product was recovered and 3100 g of U-233 product was sorbed on ion-exchange resin. Solvent extraction losses averaged 2.1 and 1.1% for thorium and uranium, respectively. Gross gamma decontamination factors were 2.3×10^4 for thorium and 1.2×10^3 for uranium.

Design of the third uranium cycle was completed and installation is 75% complete. Design of the 1AWC storage facility was started. The sample conveyor system was completed and initial run-in was started. The continuous interface purge system is 30% complete.

In laboratory process improvement studies, fission product extraction was decreased by increasing the concentration of thorium in the organic phase. Ruthenium decontamination increased continuously with decreasing acidity. I-131 was not completely removed by the addition of KI and sulfite to the solvent extraction feed and scrub, but was removed when the KI was added prior to the feed adjustment step.

The flowsheet for the Thorex 1A-column interfacial emulsions and/or solids removal system was finalized. Low surface tension of the scrub used in the column was found to cause severe interfacial emulsions.

Nonaqueous Processes. Development of apparatus components for producing an oxygen-free inert gas atmosphere in the Hermex process dissolver, cooler, and filter was continued.

Two integrated-flowsheet runs were made in the volatility-sorption part of the Fused Salt--Fluoride Volatility Pilot Plant to determine operability and uranium losses. Recovery was 98.6% in the first run but a fitting failure caused about a 20% loss in the second run. Absorption losses were less than 0.1% and desorption losses were less than 0.3%.

Most of the activity transfer in the fluorination step occurred during the UF_6 volatilization. Micrometallic filtration of the process gas stream removed zirconium and niobium from the product but not much ruthenium. The transfer of zirconium activity in nitrogen sparging was of the magnitude expected from the known vapor pressure of ZrF_4 over fused salt. Fluorine sparging transferred more activity than nitrogen, although not of the magnitude encountered in UF_6 volatilization.

Dissolution of stainless steel-containing fuel elements by reaction with anhydrous HF in the presence of molten 53-47 mole % $NaF-ZrF_4$ does not appear feasible.

III. AQUEOUS HOMOGENEOUS REACTOR FUEL AND BLANKET PROCESSING AND DEVELOPMENT

HRT Chemical Plant. Construction of the low-pressure system was completed, and preliminary tests were made, including a hydrostatic test at 500 psi and calibrations of various level instruments. Difficulties with sealing the special swagelok fittings joining the tantalum tubes from the dissolver to the process piping above the dissolver were temporarily alleviated by substituting lead ferrules in place of the specified tantalum ferrules. Checks of the low-pressure leak detector lines showed two of the approximately 40 lines to be contaminated with small quantities of chlorides.

Design of the closed-cycle cooling-water system is 80% complete.

Uranyl Sulfate Fuel Processing. Simulated reactor corrosion product solids did not show any pronounced tendency to adhere to stainless steel surfaces in the presence of UO_2SO_4 solutions. Laboratory studies simulating as nearly as possible the operating conditions of the HRT dissolver showed that unsatisfactory dissolution in the chemical plant equipment is due to insufficient agitation.

The stability of iodate in UO_2SO_4 solutions at 100°C in the presence of Co-60 radiation decreased as the sulfuric acid content of the solution was increased. The effect of variation in the H_2/O_2 ratio in contact with such solutions was less pronounced as the acidity of the solution increased. Iodine added to the high-pressure system of the HRT mock-up loop rapidly transferred to the low-pressure system and collected on the platinum catalyst recombiner. The catalyst was poisoned at 400-420°C but was regenerated, and operation was efficient at 650°C. A silvered alundum bed ahead of the catalyst bed absorbed iodine efficiently.

The adsorptive capacity of activated charcoal for krypton at temperatures ranging from 25-100°C was less than would be predicted by extrapolation of data obtained at lower temperatures. The presence of moisture on the charcoal markedly reduced the amount of krypton adsorbed.

Uranyl Sulfate Blanket Processing. Plutonium formed by LITR irradiation of 1.4 m UO_2SO_4 in a titanium bomb under oxygen was 16% in solution at a concentration of 14 mg/kg H_2O and 84% adsorbed on the titanium. Only a trace of plutonium was found in the precipitate. Neptunium distribution was 95% in solution, 4% adsorbed, and ~1% in the precipitate.

Thorium Oxide Slurry Development. In out-of-pile studies in the dashpot-stirred bomb viscosities of concentrated (>750 g Th/kg H_2O) slurries of thorium-uranium oxide (U/Th = 0.005/1) decreased with increasing calcination temperature to 1600°C and decreased with increasing slurry temperature to 300°C.

A slurry of thorium-uranium oxide calcined at 1000°C and containing 0.05 m MoO_3 showed high catalytic activity for the recombination of radiolytic hydrogen and oxygen. Rates in the slurry as prepared and after activation with hydrogen were greater than 40 moles H_2 per hour per liter of slurry at 250°C and hydrogen pressure of 500 psi.

In evaluation tests of a 1/4-in.-i.d. glass elbow flowmeter, with slurries of specific gravities of 1.8 and 1.5, the velocity vs. ΔH in terms of head of fluid flowing was log-log linear. The calibration was the same with either water or slurry.

In studies on calcination temperature effects on thorium oxide, firing at 1000 and 1200°C did not affect the average particle size but firing at 1400 and 1600°C increased the average particle size, indicating sintering to be initiated between 1400 and 1600°C. Oxide fired at 1600°C resisted degradation and could not be reduced to the particle size of the original oxide. For oxides of approximately the same particle size the abrasive effect, measured on the jet impingement slurry abrasion tester, increased with increasing calcination temperature and showed a linear logarithmic dependence on reciprocal firing temperature ($^{\circ}K^{-1}$). This appears to associate the increase in the abrasive characteristic with increasing crystallite size.

Slurry hindered-settling rates from room temperatute to 300°C decreased with decreasing particle size. Settling rates increased with increasing slurry temperature. Additional factors other than simple decrease in water viscosity appeared to be involved. Silicate addition slowed the rate at all temperatures and changed the shape and increased the slope of the temperature-dependence curve.

The addition of 5000-10,000 ppm of SiO_2 (based on ThO_2) to a thorium oxide slurry of 0.5 μ average particle size markedly decreased its settling rate from room temperature to 300°C. Previous studies with slurries of larger particle size indicated a negligible effect of silicate on the settling rate at 300°C.

In large-scale preparation of ThO_2, the size of the thorium oxalate particles precipitated from thorium nitrate solution was dependent on the rate at which the solution was stirred during the precipitation at room temperature. A jet mixer produced a thorium oxalate precipitate which gave acceptably small (78% < 1 μ) ThO_2 particles after firing.

IV. CHEMICAL ENGINEERING RESEARCH

Ion-exchange Studies. Permutit SK (10-20 mesh) anion-exchange resin did not decrease in ionic capacity or change in mechanical properties when it was subjected to 940 gamma watt-hours of radiation (3.5×10^8 r) per kilogram of dry resin.

Hydroclone Development Studies. The separation factor of a hydroclone was affected appreciably by the type of pump and piping arrangement used, in a pump-hydroclone mixer-settler solvent extraction contactor. Separation factors for a three-stage centrifugal pump were only about half those for a turbine pump.

Part I. FEED MATERIALS PROCESSING

1.0 METALLEX PROCESS

In the Metallex process dry, anhydrous thorium tetrachloride is reduced to $ThHg_3$ by sodium amalgam, and massive thorium is recovered by vacuum-distilling off the mercury.

1.1 Continuous Reduction Runs (G. K. Ellis, G. Jones, Jr., C. C. Nance, D. H. Newman, R. O. Payne, J. C. Rose, W. G. Sisson)

Approximately 123 lb of reduced thorium metal was produced, in five runs (Nos. 7-11), from a total of 243 lb of $ThCl_4$. In two runs the reduction was determined to be 83%. The five runs required a total of 53 hr operating time.

A 20-min residence time in the contactor was characteristic of all runs, corresponding to a Na(Hg) flow rate of 175 ml/min and 3.5 liters holdup in the contactor. Water vapor in the contactor was at all times less than 150 ppm, by volume, and temperatures were 130 ± 5°C. Runs 9-11 were conducted with 43.2% excess sodium using 3.37 M Na(Hg). In Run 8, the excess sodium was varied from 150 to 43% by controlling the $ThCl_4$ feed rate. In run 8, varying the thorium production rate from 1.5 to 2.6 lb/hr did not affect the percentage reduction:

Time from Beginning of Run (hr)	$ThCl_4$ Feed Rate (g/min)	Sodium Excess (%)	Th in Aqueous Wash (g/min)	Th Metal (g/min)	Production (lb/hr)	Reduction (%)
4.5	22.5	100	2.1	11.8	1.5	85
7.0	33.0	67	2.8	17.8	2.3	86.5
9.3	38.5	43	3.7	20.2	2.6	85

Heterogeneity, characteristic of slurries, made difficult the obtaining of a representative sample of the amalgam product stream at the wash column underflow and aqueous waste stream at the overflow. However, representative samples were more often obtained from the aqueous stream, and for this reason material balances for runs 8 and 9 were based on the aqueous analyses. The thorium content of quasi-amalgam product stream was obtained by difference between the known thorium feed rate and analyzed thorium in the aqueous waste. The variation of thorium in the aqueous stream with time resulted in smooth curves (Fig. 1.1), giving credibility to this series of analyses. Corresponding quasi-amalgam product analyses were erratic, indicating unreliability.

For a given sodium amalgam concentration, possibilities exist for increasing thorium metal production in existing equipment by either decreasing the residence time or increasing the salt feed rate for a given residence time to effect a minimum of 10% excess sodium. The latter operation would give an hourly production of 3.4 lb of thorium metal. The contactor was operated during the last three runs at a 2.6-lb/hr production rate.

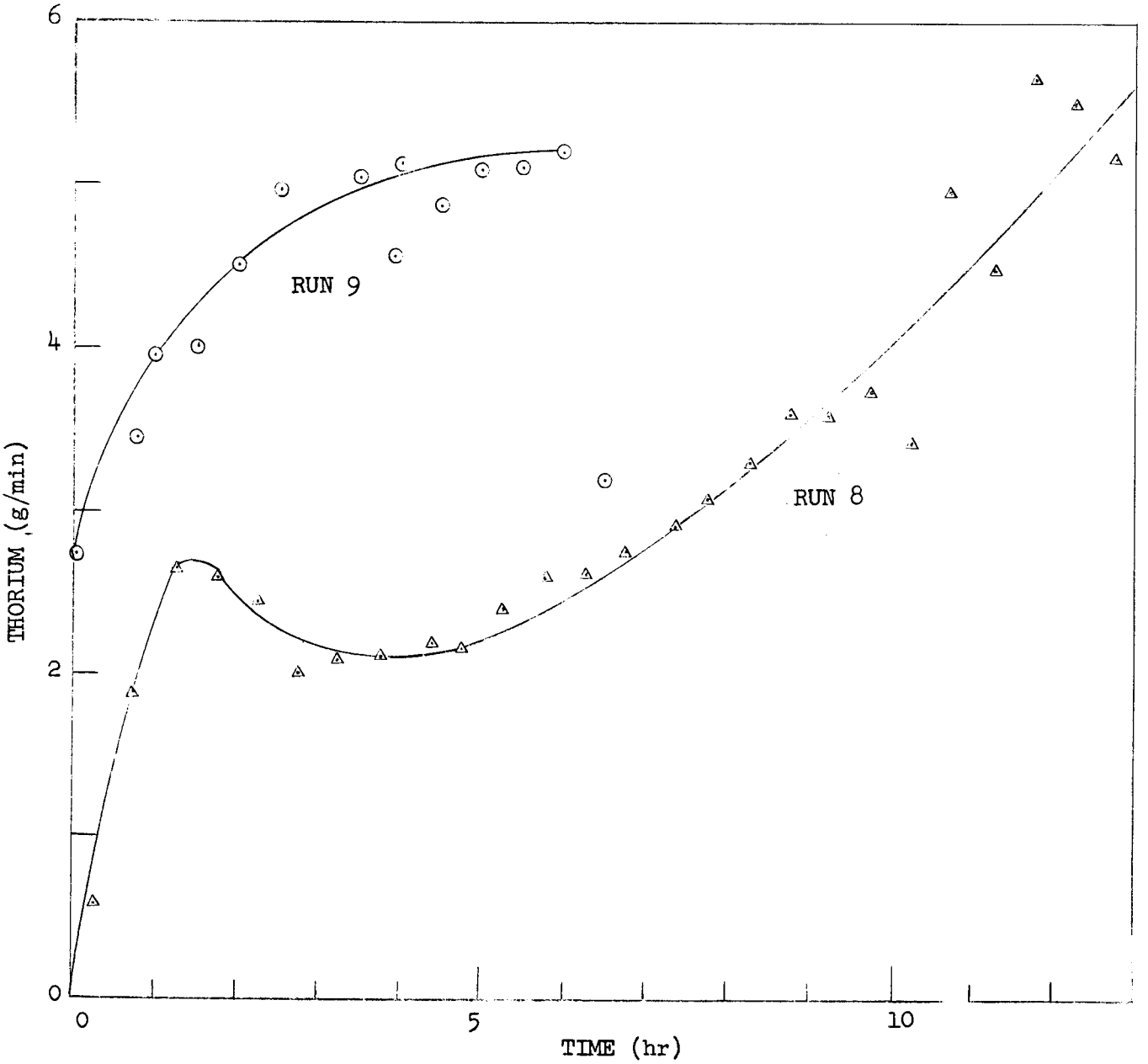

Fig. 1.1. Rate of Appearance of Unreduced Thorium in Aqueous Overflow of Wash Column folling the 1.5-gal Dispersal Reduction Reactor.

A decanter was installed between the wash column and coagulation tanks to minimize water carry through. The separation occurs as a result of amalgam product flow through a tortuous nickel amalgamated path, the mercury wetted surfaces effectively allowing retention of water and other impurities in the separator. Installation of another decanter between coagulation tanks and pressurizer is planned to assist in impurity elimination and to allow observation of quasi-amalgam product for quality control purposes before pressurizing and subsequent filtration and pressing operations. Provision has been made for blanketing the coagulation tanks with argon at all times.

1.2 Filter-Pressing and Vacuum Distillation of Amalgams on a 2-lb/hr Scale (O. C. Dean, E. S. Bomar*, J. Terry*, C. T. Thompson)

The thorium amalgam product from four reduction runs, 8385 lb, was filter-pressed in the Carver die to form nine 5-1/8-in.-dia cakes ranging in weight from 4.7 to 27.5 kg and in length from 1 to 6-1/4 in. The thorium content of the cakes ranged from 7.8 to 15.6% and averaged 9.4%. The mercury was distilled in a vacuum retort to produce 27.5 lb of massive thorium and 298 lb of mercury.

Mercury Balance. The weight of the filtrate recovered from the pressing operation was 8060 lb. A mercury balance over one run showed that the mercury entering the run was ~99% recovered in filtrate and distillate. Close balances were impossible with the present methods of measurement of the mercury to the run.

Thorium Balance. Based on the weight of thorium chloride fed, analyses of the amalgam wash stream, and reduction yield, only 31% of the thorium in the amalgam as it left the wash column was recovered as finished metal. Essentially all the loss occurred in the filtrate. In the first three runs, a 100-mesh stainless steel screen was used as a filter and losses were 56, 77, and 77%. In the fourth run a C porosity stainless steel filter, with an average effective pore diameter of 10 μ, was substituted for the screens and the losses were 58%. Difficulties in sampling the heterogeneous filtrates made the problem of accurate assessment of losses extremely difficult; hence there was about a factor of 3 discrepancy between analytical results and numbers obtained from $ThCl_4$ feed. There was considerable evidence that thorium mercuride escaped past the felt seals of the die press, especially when the applied amalgam pressure to the filter was suddenly increased.

Metal Quality. All the product billets from the first three runs broke up during retorting into two or three pieces. Solid deposits in cold sections of the retort indicated that gases were formed during the later stages of sintering. The bubbles, seams, and cracks were attributed to impurities, mainly water, carried into the pressed cake through the amalgam. To clean the amalgam before filtration, an amalgam barrier filter was installed between the wash column and the amalgam storage tanks. Samples of amalgam entering the press showed fewer impurities, but were not completely water- and oxide-free during run 4. The products from run 4 did not break up, however.

Bulk densities of samples of the products in runs 7, 8, and 9 ranged from 6.89 to 9.65 g/cc; voidages ranged from 17.3 to 41.0%; and HCl insolubles (oxide) from 0.47 to 1.21%. There was no observed pyrophoricity of the product.

1.3 Removal of Impurities from Washed Thorium Amalgam, Laboratory Scale (O. C. Dean, C. T. Thompson)

Residues of water or aqueous solutions of chlorides carried over to the retorting step from the washing step increase the thorium oxide and other impurity

* Cooperating members of the Metallurgy Division.

contents of the sintered metal product. The bulk density of sintered Metallex thorium increases and voidage decreases as the thorium oxide content decreases. Of several methods investigated for removing impurities from washed amalgam, barrier filtration appeared the most effective:

	Sintered Metal		
Secondary Amalgam Treatment	Bulk Density (g/cc)	Voidage (%)	ThO_2 Content (%)
None	8.45	27.6	0.81
Second wash, HCl + H_2O	8.40	27.9	0.69
Heating to above 100°C to complete reaction with thorium and skimming off solids	7.60	35.0	0.57
Small droplets subjected to vacuum at room temperature	9.38	19.5	0.79
Amalgamated barrier filtration	9.39	19.5	0.67
Combined evacuation and amalgamated barrier filtration	10.05	13.9	0.75
Washing with water containing aniline (mild oxidation inhibitor)	9.93	14.9	0.57

All except heating increased the bulk density and decreased the voidage, but all except evacuation reduced the oxide content in the final metal. The oxide in the evacuated amalgam is not in agreement with former results, which indicated it to be 0.65%.

The water-removal experiments were made with amalgam prepared by reducing $ThCl_4$ with sodium amalgam in a 1.5-gal Dispersal mixer, and washing with 3 N HCl and then deionized water in a 4-in.-dia glass column at a rate of ~2 lb of thorium per hour. Samples of the amalgam were treated to remove impurities by the methods listed and then filter-pressed into pellets and subjected to vacuum distillation over a 4-hr period with a maximum temperature of 1100°C for 1 hr. The sintered metal samples were 5-10 g.

1.4 Vapor Phase Reduction of Uranium (C. D. Scott, W. G. Sisson)

In four experimental runs to test the feasibility of the vapor-phase reaction, $UF_6 + 6Na = U + 6NaF$, there was considerable UF_6 reaction and formation

of uranium metal or stable uranium compounds. The reaction appeared to proceed most favorably between 550 and 660°C as shown by the temperature increase and percentage uranium recovery:

Run	Duration (min)	Initial Contactor Temp. (°C)	Recovery of U in Residue (% of U in UF_6 feed)	Increase in Contactor Temp. (°C)
1	3.0	450	--	0
2	2.5	800	37*	13
3	12.0	550	--	17
4	13.0	660	92	23

*UF_6 lost to atmosphere because of gasket leak.

The runs were made by introducing UF_6 gas with a carrier gas into a temperature-controlled contactor which contained molten sodium metal with an atmosphere composed of sodium vapor and argon gas. The UF_6 and sodium reacted in the contactor, forming solid products. An exhaust line vented the contactor through a cold trap (at approximately -20°C) to the atmosphere. Internal contactor temperatures were measured by a thermocouple. At the end of each run, the solid material left in the contactor was processed by adding n-butyl alcohol after the contactor had cooled to room temperature. The alcohol reacted with the remaining sodium metal, leaving as solids all residue from the reaction. This residue was covered with n-butyl alcohol until analyzed. No measurable amount of material was found in the cold trap after any of the runs.

2.0 FLUOROX PROCESS*

In the Fluorox process, UF_6 is prepared by oxidation of UF_4 with oxygen or dry air at high temperatures. The UF_4 may be obtained by simultaneous reduction and hydrofluorination of UO_3 and UO_2F_2, by the Excer process, or by conventional feed materials processes.

2.1 UF_4 Oxidation in a Fluidized Bed Reactor (J. B. Adams)

Data from ten UF_4 oxidation runs (Table 2.1) in the fluidized-bed reactor agreed fairly well, considering the wide range of the many variables, with the best average laboratory data** on the variation of pseudo-first-order rate constants with temperature (Fig. 2.1). Agreement was much closer in the ranges of practical importance, i.e., low UF_4 concentration and high temperature.

Rate constants in the first five runs were, generally, considerably lower than those obtained from laboratory data. These runs were made with impure UF_4, containing about 15% uranium oxides, and uranyl fluoride. It had been produced by simultaneous starch-reduction and HF-hydrofluorination of Hanford orange

* Studies on dehydration of hydrated UF_4 for use as Fluorox process feed are given in Sec. 3.4.

** L. M. Ferris in preceding monthly reports.

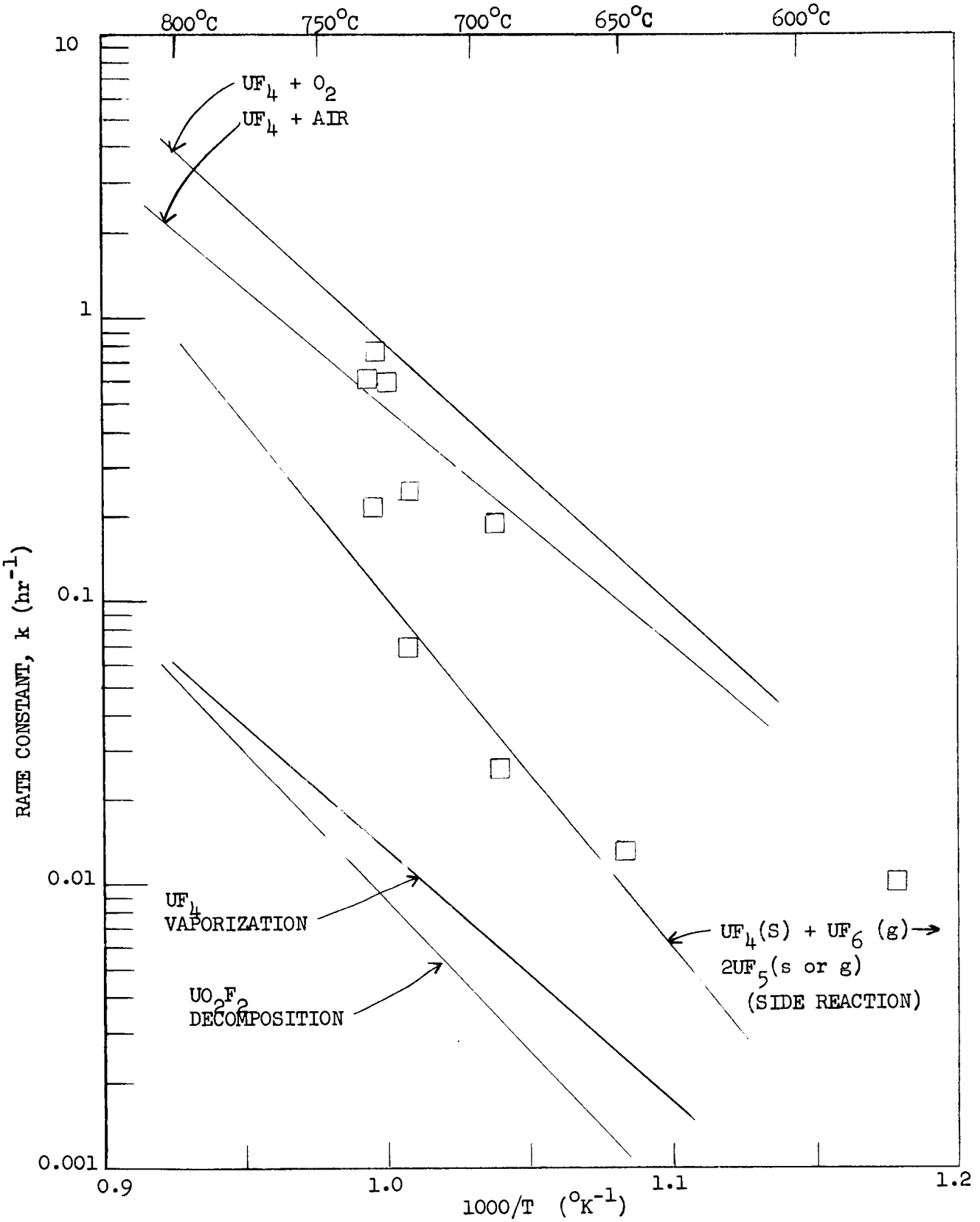

Fig. 2.1 Comparison of Fluidized-bed-reactor and Laboratory Data on Oxidation of UF_4. Solid lines indicate laboratory data. Points are from fluidized-bed-reactor runs (Table 2.1).

oxide (UO_3) in earlier moving bed reactor studies. The carbon content was ~0.4% and the specific surface area was low because of sintering during the long heating at high temperatures. Oxidation of carbon and possibly of uranium oxides may have caused internal heat generation and high local temperatures as well as other interferences.

Data from the last five runs were in better agreement with laboratory data. The feed was pure UF_4, prepared by electrolytic reduction and HF precipitation (Excer process), plus UO_2F_2, but containing no oxides. This UF_4 had a higher specific surface area.

In the last four runs, where the agreement with laboratory data was closest, the UF_4 concentration in the feed was low. This UF_4 concentration range is of greatest practical interest since a one-stage fluidized-bed reactor for the Fluorox process would probably contain essentially pure UO_2F_2 with only a small fraction of UF_4 being added and rapidly reacting.

2.2 Equipment Modification and Installation (C. D. Scott)

Installation of the revised off-gas system and all fabricated parts of the flame reactor is complete. Views of various parts of the equipment are shown in Figs. 2.2-2.6. The pilot light assembly for the flame reactor is being fabricated.

Table 2.1. Data from Batch UF_4 Oxidation Runs in a Fluidized-bed Reactor

Run No.	Rate Constant, k (hr^{-1})	U(IV) (%)	Avg. Temp. (°C)	Net Operating Time (hr)
1	0.010	55-57	575	3.0
2	0.026	53-57	690	1.5
3	0.218	49-65	733	0.5
4	0.013	26-55	650	26.4
5	0.071	25-54	720	7.2
7	0.248	23-58	720	2.5
8	0.577	22-30	735	0.27
9	0.195	19-22	690	0.45
9A	0.755	2-10	730	0.92
9B	0.586	1-2	730	0.29

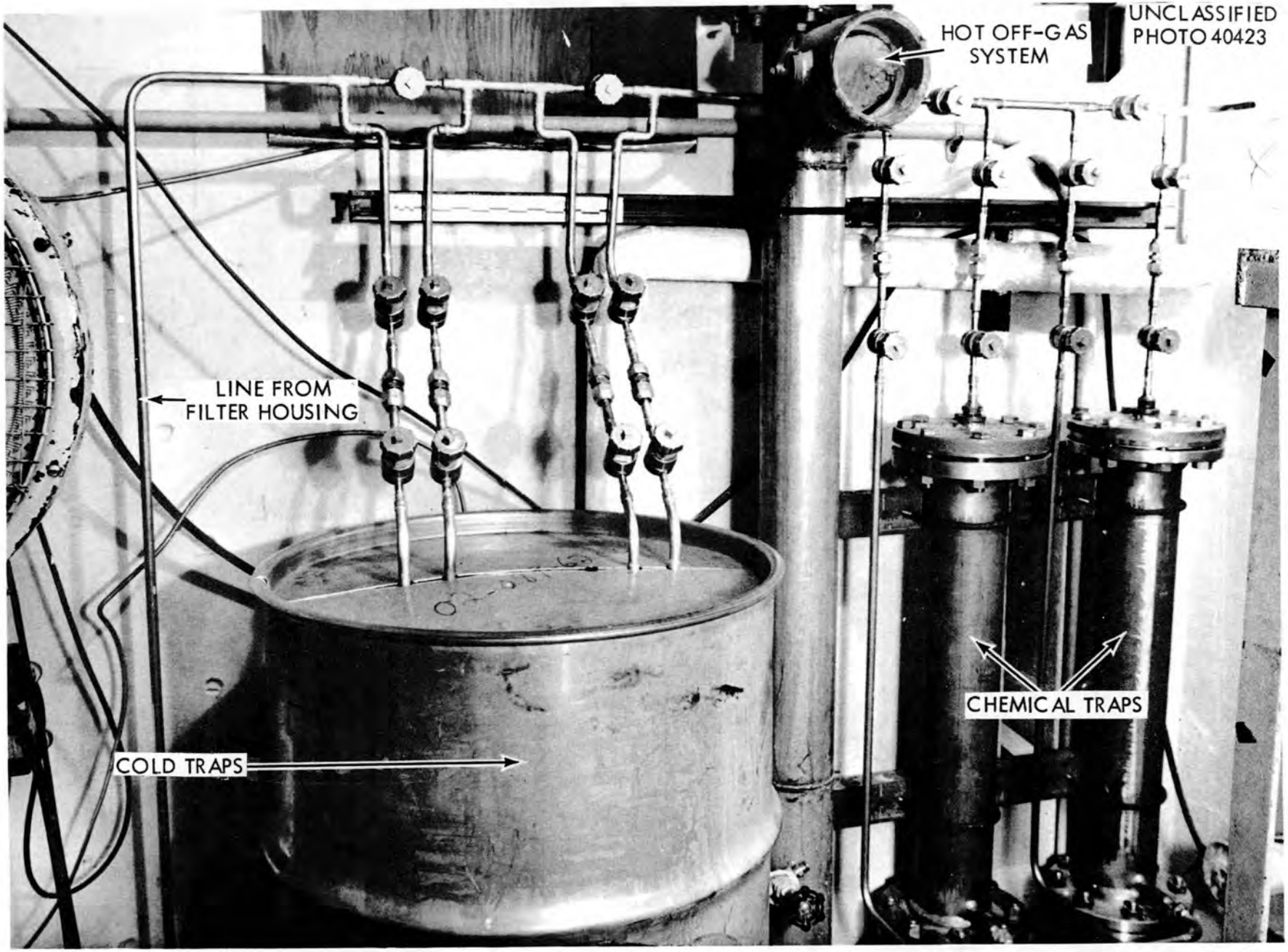

Fig. 2.2. Fluorox Process Off-Gas System.

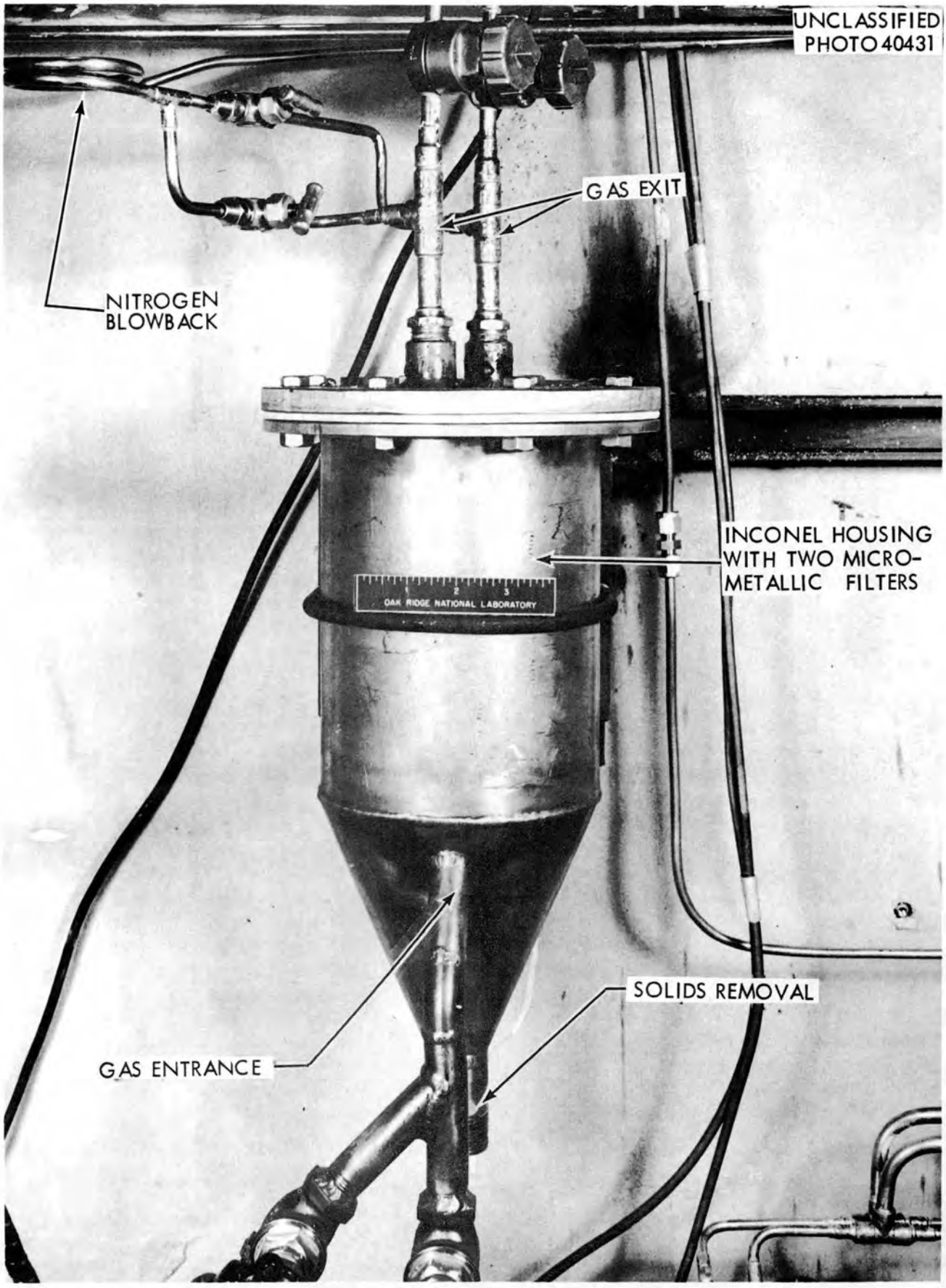

Fig. 2.3. Fluorox Process Off-Gas System Filter Assembly.

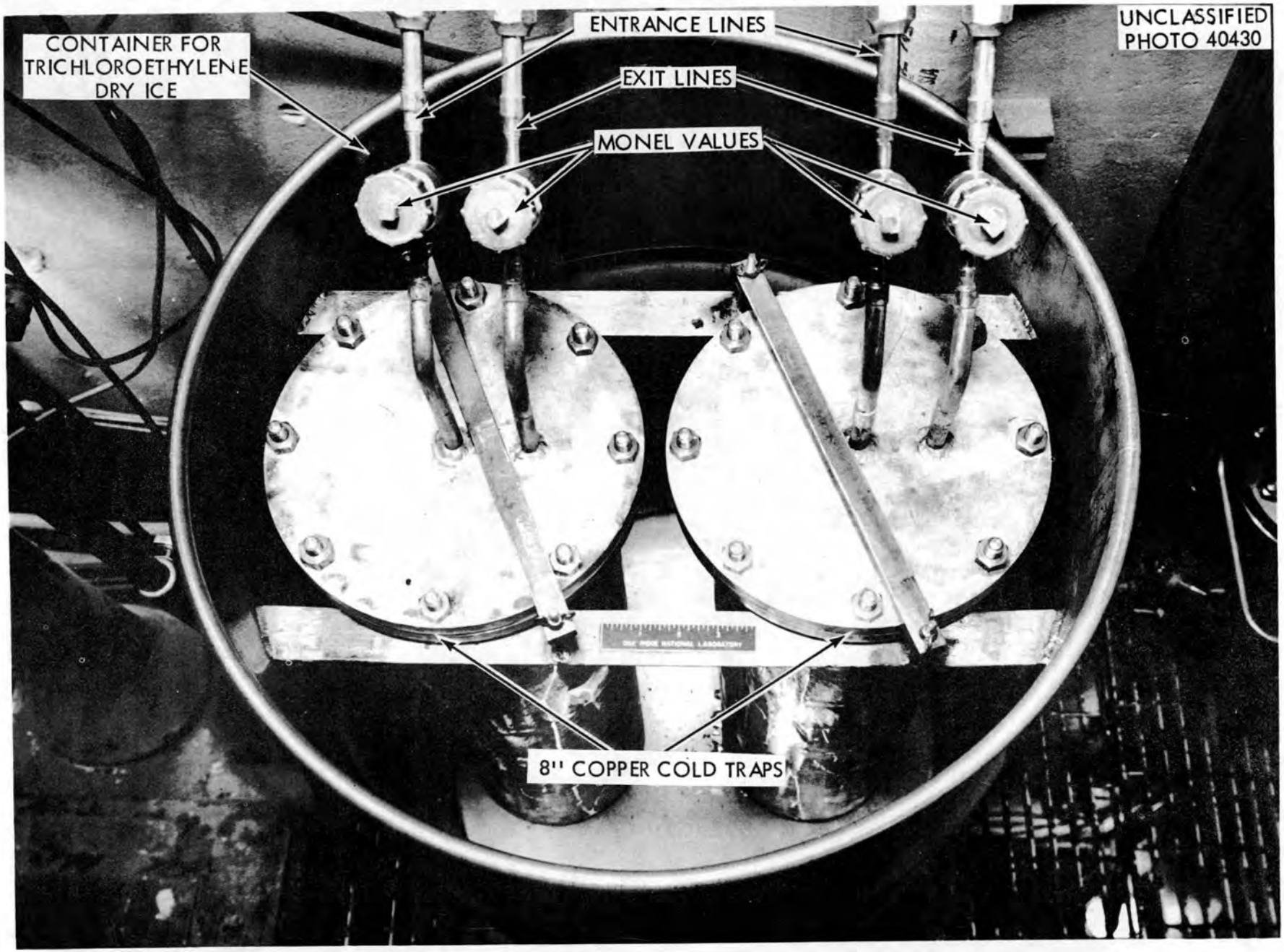

Fig. 2.4. Fluorox Process Off-Gas System Cold Traps.

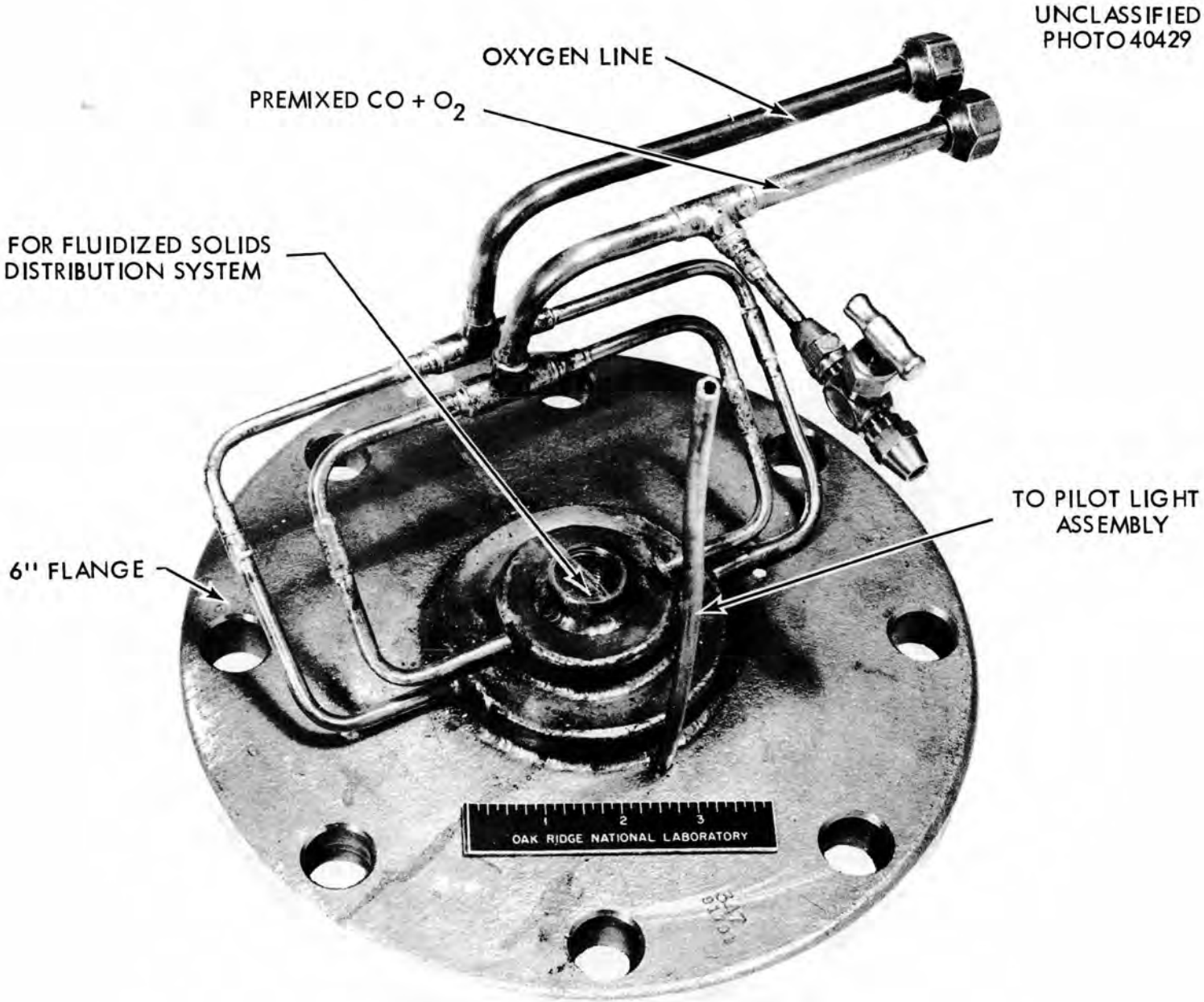

Fig. 2.5. Fluorox Process Flame Reactor: Top of Burner Assembly.

UNCLASSIFIED
PHOTO 40425

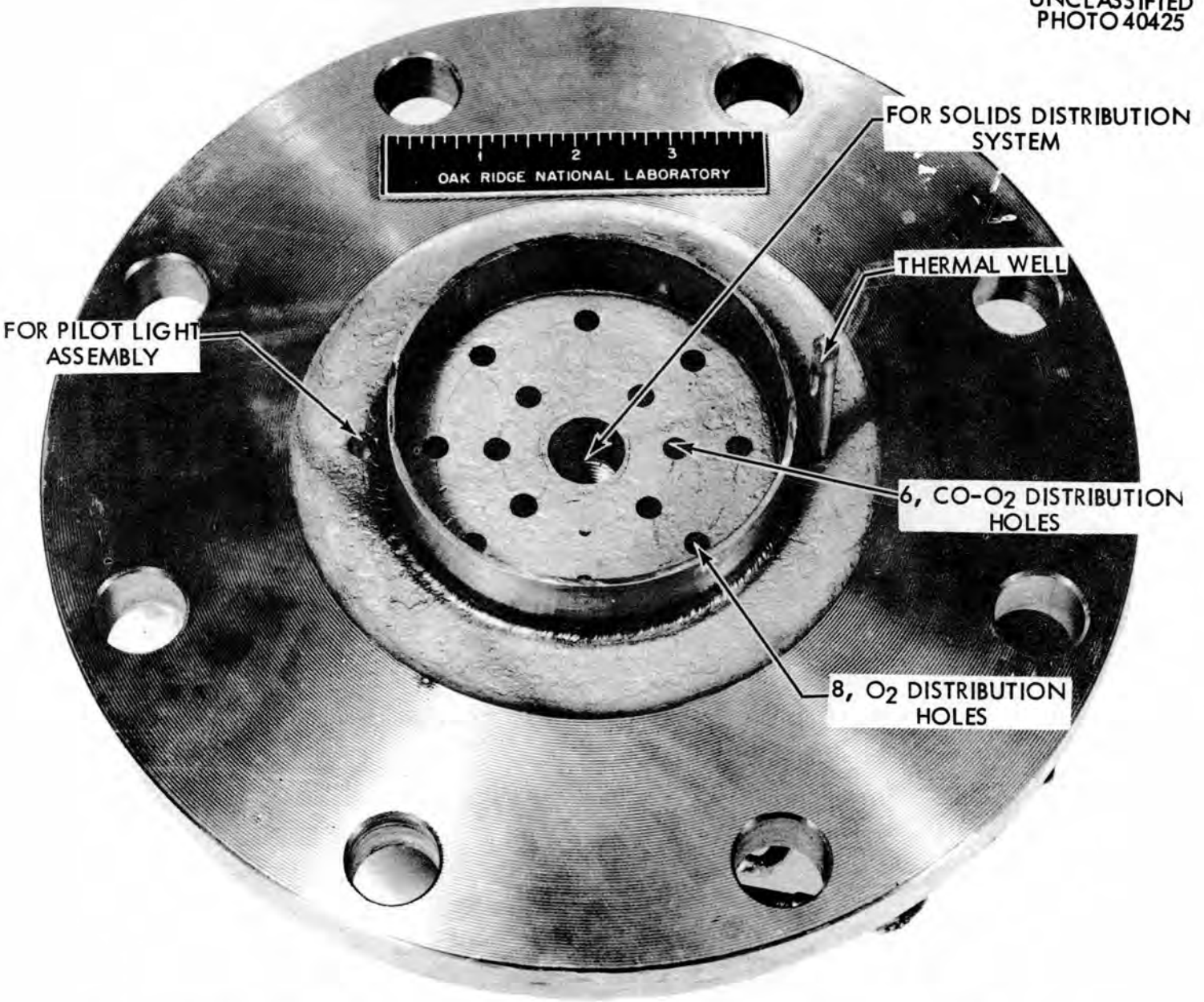

Fig. 2.6. Fluorox Process Flame Reactor: Bottom of Burner Assembly without Lavite Burner.

3.0 EXCER PROCESS

The Excer process is an aqueous process for the production of uranium tetrafluoride, of which the key operations are continuous ion exchange, electrolytic reduction, and precipitation followed by the solids handling operations of filtration, drying, densification, and dehydration.

3.1 Flowsheet Demonstration (I. R. Higgins)

About 30 lb of uranium is being processed for a flowsheet run, starting with ore concentrate. The initial anion-exchange step is complete, as reported previously. Before continuing the flowsheet material through the sodium-uranium cation-exchange step, dummy solutions were used to establish the flow conditions. The 2-in.-dia continuous unit was run several days and the separation was unsatisfactory. The ratio of U to Na was changed only from 4/1 to ~10/1. The separation conditions were established by a fixed-bed test in a 1 M HCl environment and a separation factor of 2.7 was indicated. The continuous column was run with 5 M HCl at a 5-fold lower flow rate so that a common scrub and strip solution could be used. This made flow control too difficult and a distributor for 1 M HCl has been introduced for further testing.

3.2 Reduction Step

Electrolytic Reduction (P. N. Rigopulos). A pilot-size electrolytic cell for reduction of UO_2Cl_2 to UCl_4 was designed and constructed by Ionics, Inc., Cambridge, Mass. The unit uses 18- by 20-in. cation-exchange membrane and is capable of processing 20 lb of uranium per day per electrode pair. Hastelloy C and/or Karbate cathodes and Tirelloy B anodes are supplied. The unit occupies a space of about 7 by 8 ft plus a three-stage rectifier, 4 by 3 ft. It will be installed and operated for sustained periods to determine operating characteristics and maintenance.

Iron Reduction (I. R. Higgins). Reduction of UO_2Cl_2 to UCl_4 with iron at uranium concentrations varying from 50 to 180 g/liter was 85-100% efficient in 15-30 min:

Run No.	Reduction Temp. (°C)	U (g/liter)	Final H^+(N)	Time for 100% Reduction (min)	Efficiency (%)
1	57	184	0.02	18	93
2	53	152	0.01	15	86
3	35	51	0.72	15	92
4	43	104	0.77	30	100
5	54	168	0.85	15	90

A 40-80 mesh iron powder was used in the experiments in 10% excess and was stirred with the UO_2Cl_2 in a polyethylene container in each run. The initial mixtures were at room temperature, the temperatures listed being those reached by the solutions during the reduction. In runs 1 and 2 some oxides of uranium and iron were present, probably because of the low acidity of the final solutions.

If it should be necessary to remove the bulk of the iron from the uranous solution before the $UF_4 \cdot 3/4\ H_2O$ precipitation, this might be done by a fixed-bed anion-exchange separation. Preliminary studies indicate a separation factor of 4 in 7.4 N HCl.

3.3 Precipitation

Continuous Equipment (C. W. Hancher, K. O. Johnsson, C. C. Nance). The precipitation equipment has been redesigned to provide an assembly for continuous operation with a capacity of approximately 25 lb of $UF_4 \cdot 3/4\ H_2O$ per day. There are two precipitation stages followed by two stages of countercurrent decantation (Fig. 3.1). The precipitation and mixing vessels, which have a capacity of approximately 1 gal each, are constructed of bakelite and are equipped with four baffles and a turbine agitator (Fig. 3.2). In addition, the precipitators contain a monel steam coil. The settlers are conical-bottom polyethylene tanks of approximately 1.5 gal capacity. The use of a two-vessel precipitation system with independent heating coils will permit additional holdup time at the elevated temperature (90-95°C) or, by cooling the second tank, a test of the effect of rapid cooling of the slurry.

Laboratory Studies (I. R. Higgins). Precipitation studies in which a UCl_4 solution at 95°C was added dropwise to a 95°C HF solution indicated a faster settling, easier filtering $UF_4 \cdot 3/4\ H_2O$ precipitate than in the previous precipitation method where a cold HF solution was added dropwise to a 95°C UCl_4 solution. In three batches of $UF_4 \cdot 3/4\ H_2O$ prepared by the new method, the tap density of the product varied from 2.1 to 2.6 g/cc as compared with tap densities varying from 1.0 to 2.4 g/cc in the earlier method. When the mixture was allowed to cool below 90°C during filtration, a $UF_4 \cdot 2.5\ H_2O$ precipitate formed which tended to plug the filter. One batch of $UF_4 \cdot 3/4\ H_2O$ and supernatant were cooled to room temperature before filtration. A flocculent $UF_4 \cdot 2.5\ H_2O$ formed on top of the heavier $UF_4 \cdot 3/4\ H_2O$ and the filtration was very slow.

3.4 Dehydration of Hydrated UF_4

Laboratory (gram scale) and larger (pound) scale experiments were carried out simultaneously to determine the rates of dehydration and of stearic acid sublimation. The stearic acid (b.p. 383°C) is added as a lubricant in the UF_4 pelleting process. Results of both series of experiments indicated initial rapid removal of both water and stearic acid, the rates decreasing abruptly after a short time. The data for stearic acid removal suggest that some other solid organic compound with a low sublimation point, e.g., naphthalene (b.p. 218°C) be used in place of stearic acid as the lubricant for the UF_4 pelleting machine.

[redacted]

ORNL-LR-DWG. 23149

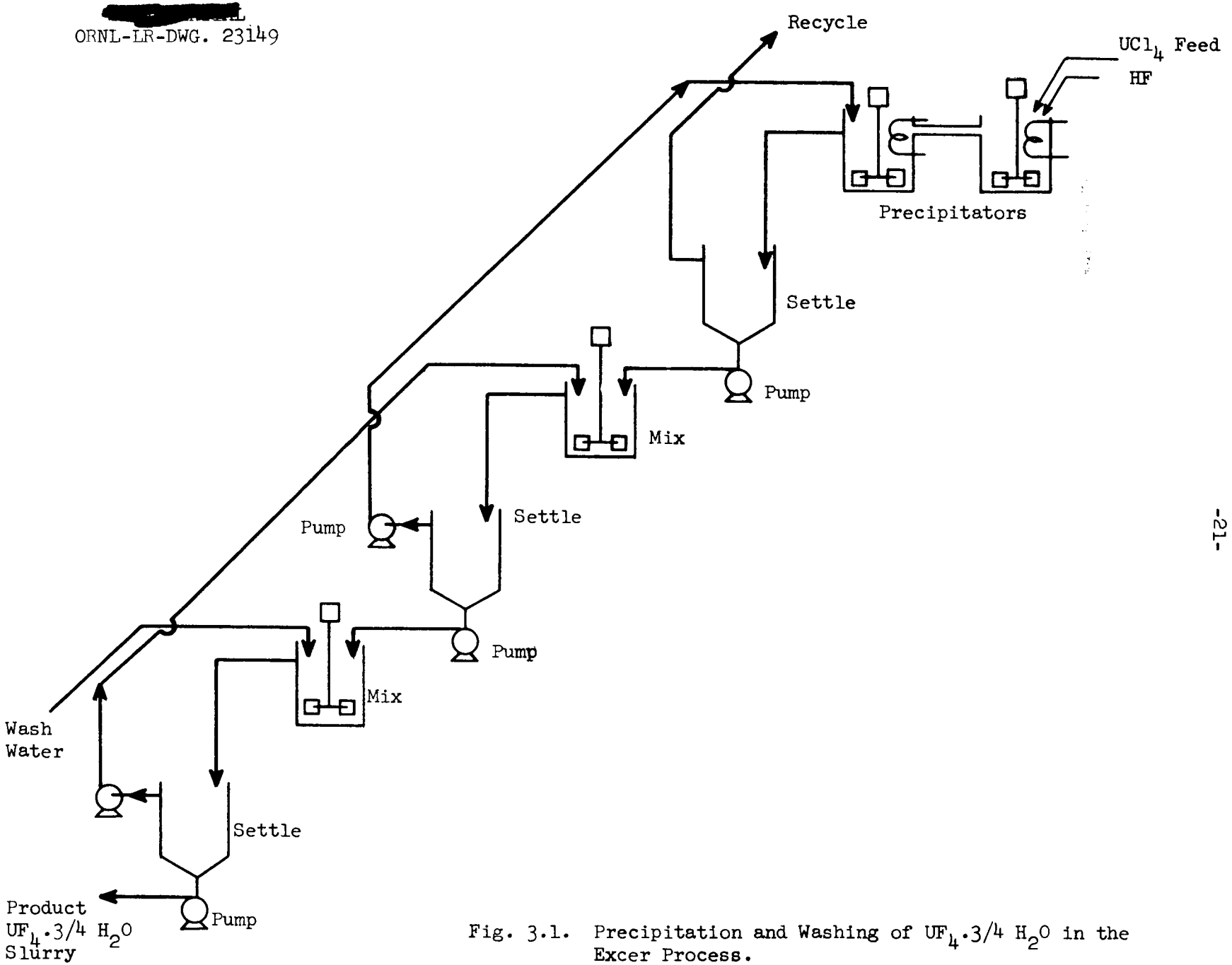

Fig. 3.1. Precipitation and Washing of $UF_4 \cdot 3/4\ H_2O$ in the Excer Process.

[redacted]
ORNL-LR-DWG. 23150

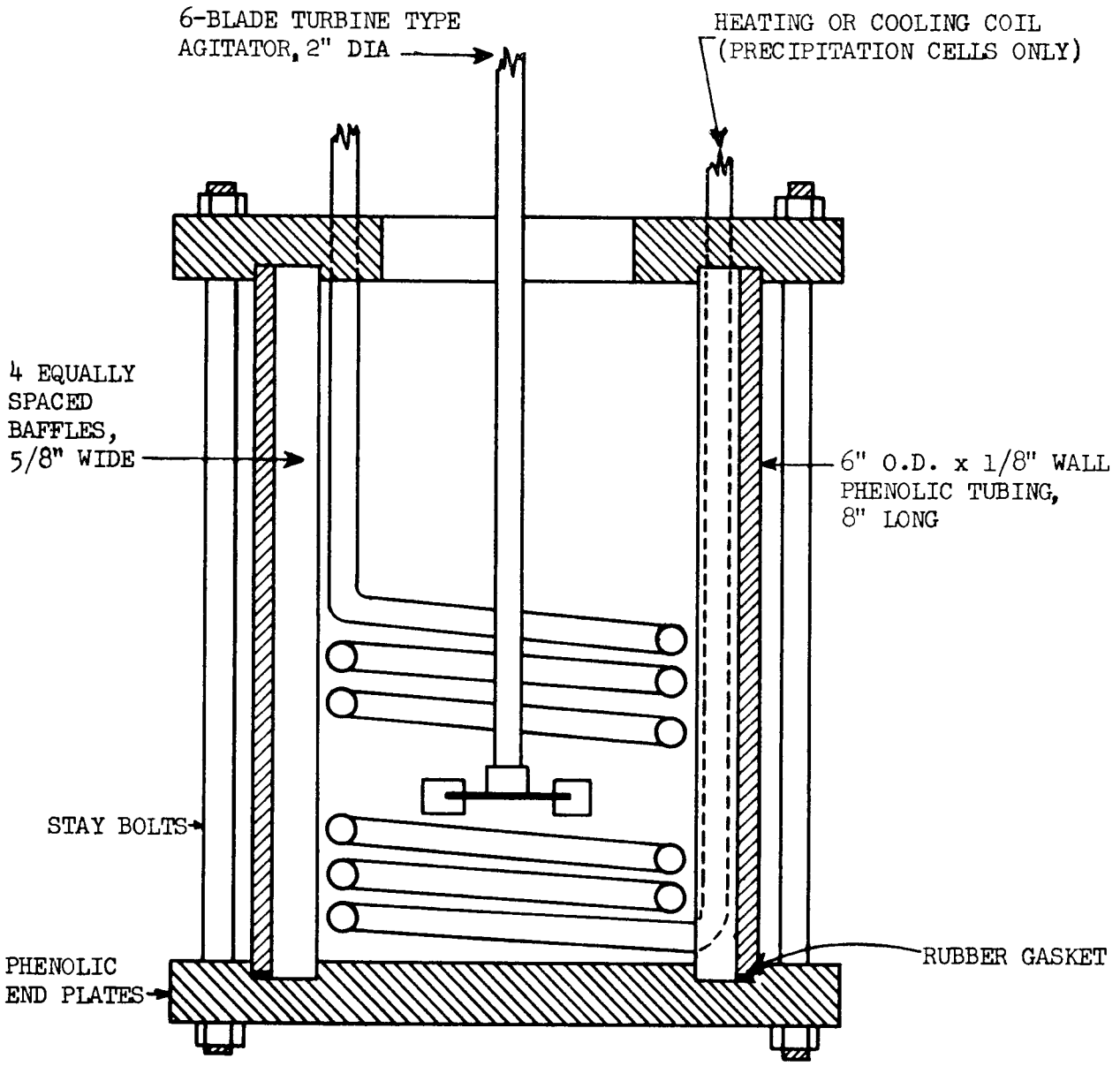

Fig. 3.2 Precipitation (or mixing) Cell for Excer Process.

Specifications for reactor-grade UF_4 are 0.2% H_2O, 100 ppm C, and 1.9% AoI (ammonium oxalate insoluble, chiefly uranium oxide).

Gram Scale (L. M. Ferris). From UF_4 initially containing 6.1% water, 75% of the water was removed in 3 hr at 200°C and 95% at 300 and 400°C (Fig. 3.3.) The stearic acid content was initially 1.3%; after 5 hr at 400°C, only 90% had been removed (Fig. 3.4).

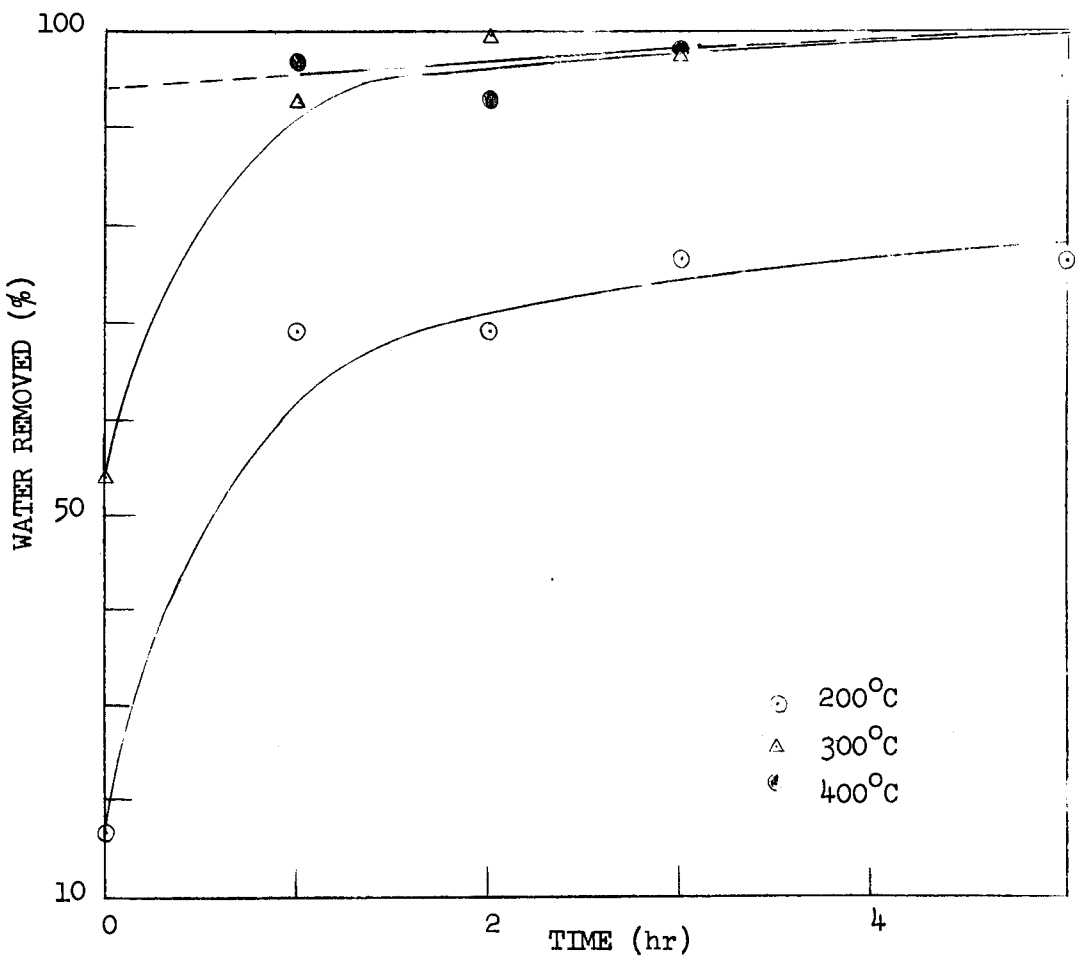

Fig. 3.3. Temperature Dependence of Water Removal from Hydrated UF_4 Containing Stearic Acid. Initial water content, 6.1%.

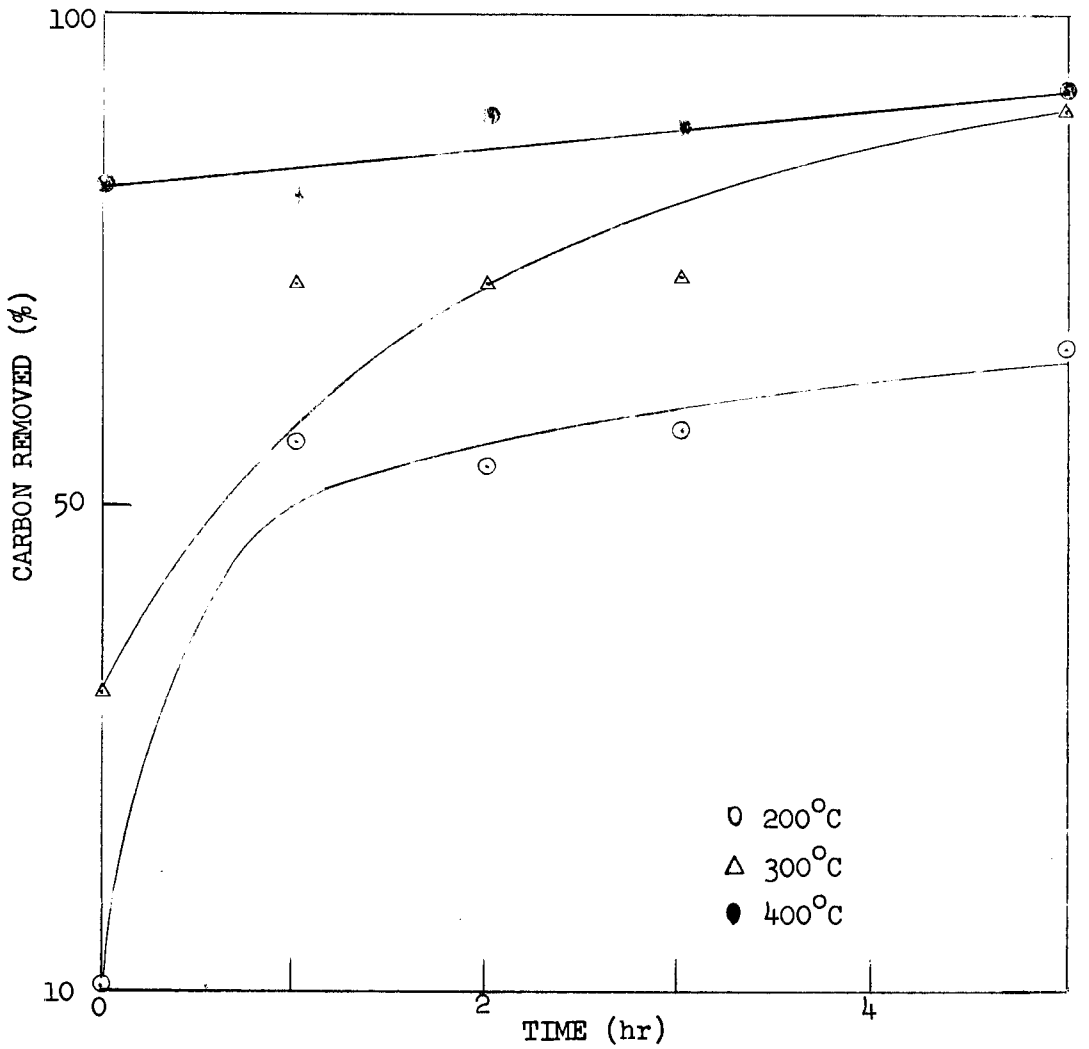

Fig. 3.4. Temperature Dependence of Carbon Removal from Hydrated UF_4 Containing Stearic Acid. Initial carbon content, 1.03%.

For the experiments weighed UF_4 samples were heated in a stream of dry helium for various periods of time. The desired quantities were calculated from chemical analyses of the residues and weight losses. The finite values for percent carbon and percent water removed at zero time were obtained by heating a sample only to the specified temperature, and immediately removing it for analysis. The rate of heating of the furnace was nearly linear over the temperature range 25-400°C, and was roughly 47 deg/min. It therefore took about 8 min to reach 400°C, during which time approximately 50% of the water was removed.

Above about 250°C the amount of oxide formed in the UF_4 after heating for several hours was greater than the specified limit for metal-grade UF_4 (Fig. 3.5). However, the formation of oxides is perhaps due to reaction of sorbed water with the UF_4, and an initial drying period of 2-3 hr at 200-250°C should remove most of the water. Additional drying at 300°C or higher could then produce nearly complete dehydration without serious oxide formation. The results and recommendations for dehydration presented here are in good agreement with those of a more extensive study.*

* R. W. Anderson, A. L. Allen, and E. W. Powell, "Electrochemical Preparation of Uranium Tetrafluoride. Part II. High Temperature Cell," K-681 (Dec. 22, 1950).

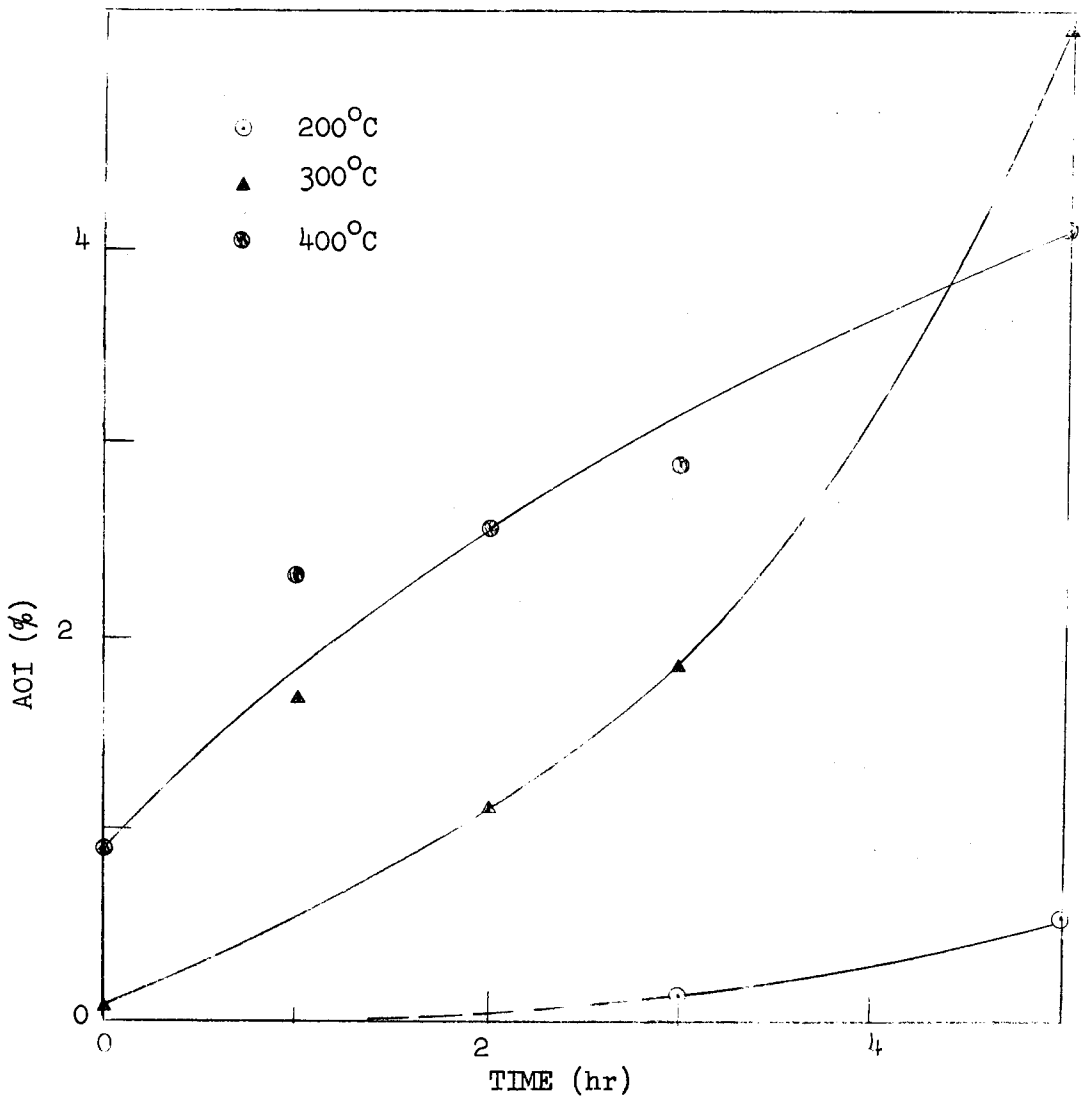

Fig. 3.5. Temperature Dependence of Uranium Oxide Formation During Dehydration of Hydrated UF_4 Containing Stearic Acid. AOI = ammonium oxalate insoluble (oxides).

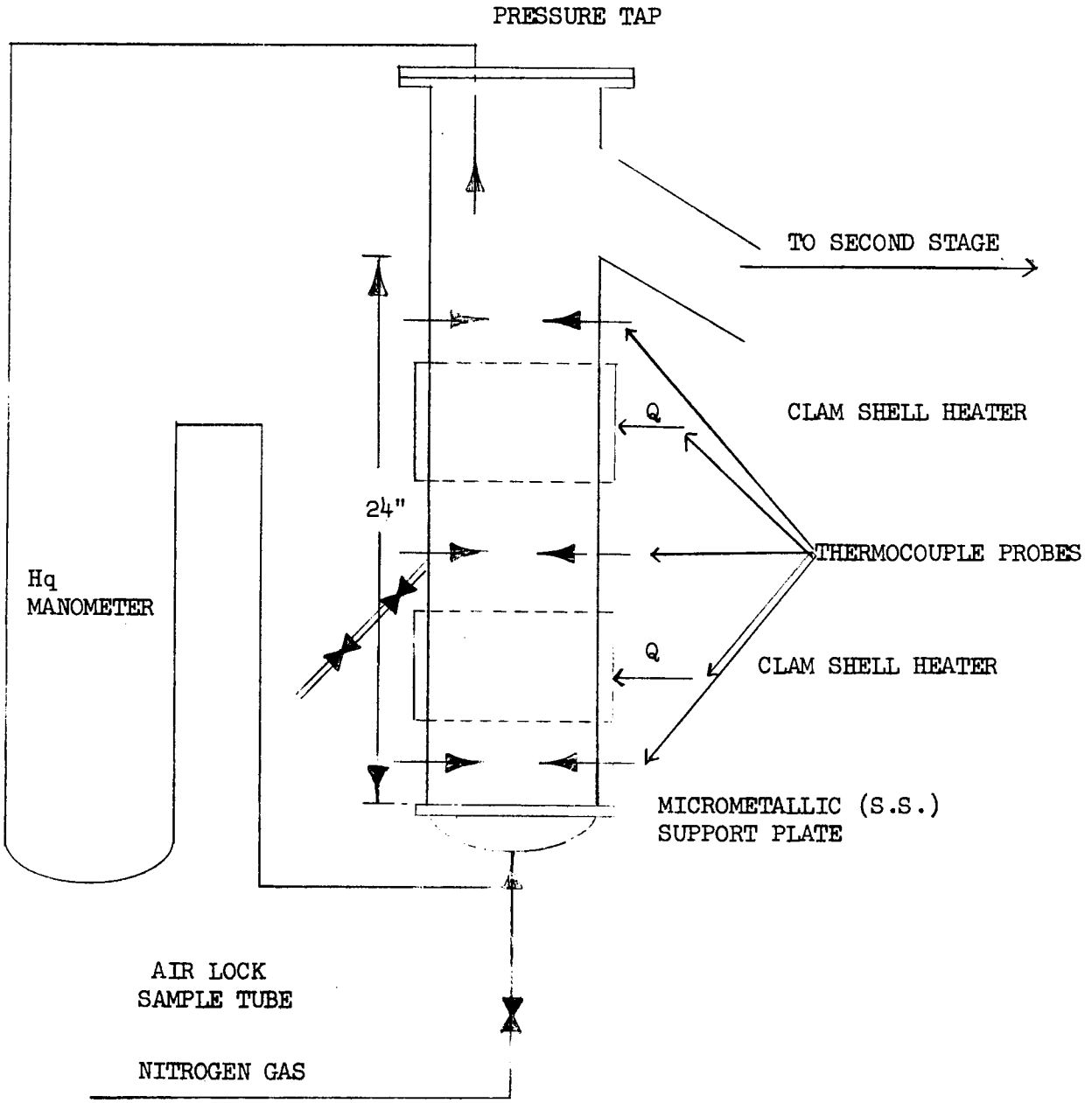

Fig. 3.6. Section of Fluidized-bed Unit.

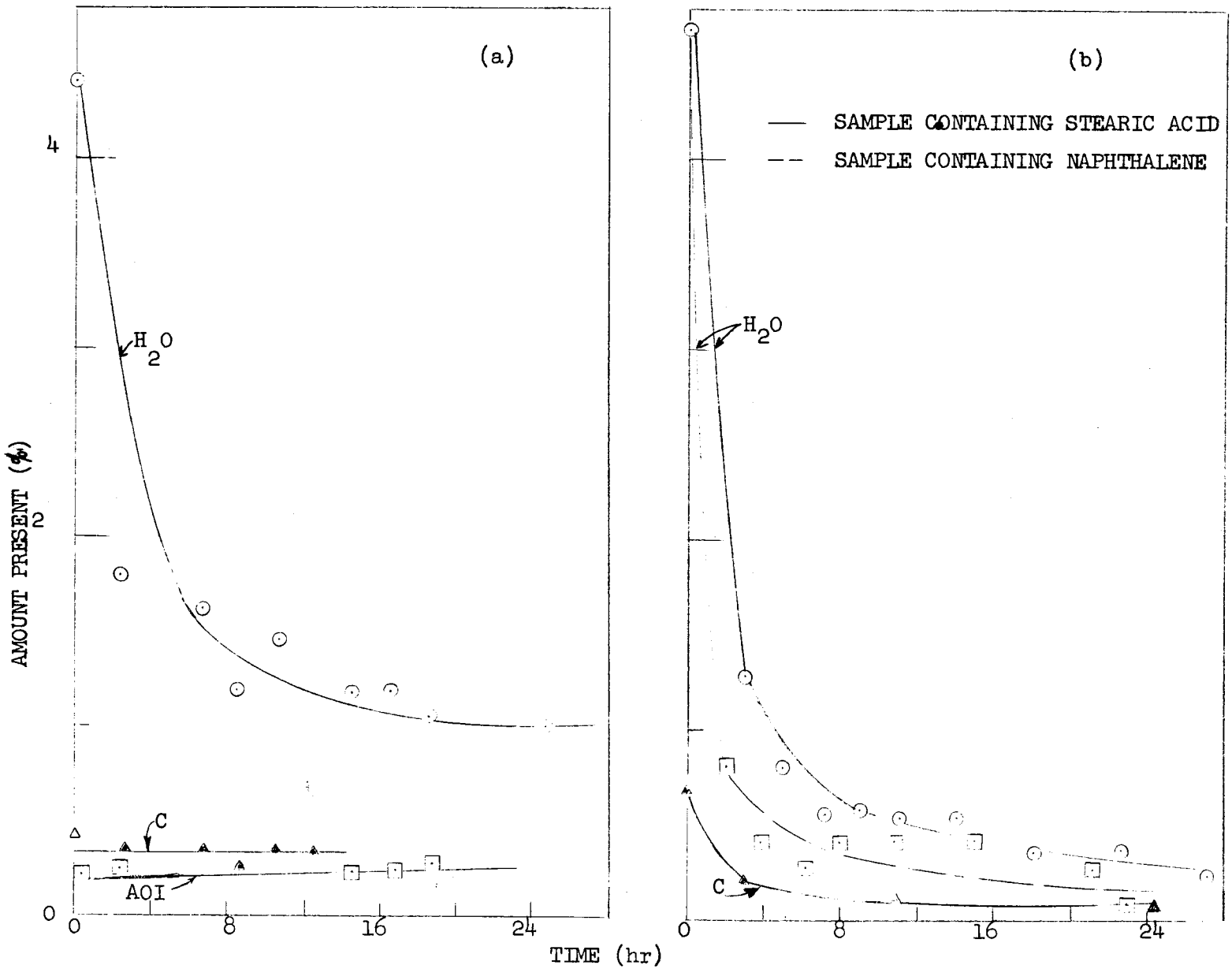

Fig. 3.7. Dehydration of UF$_6$·2/4 H$_2$O at (a) 250 ± 25°C and (b) 250 ± 25°C

Pound Scale (C. W. Hancher, P. N. Rigopulos, R. O. Payne, J. S. Taylor, C. C. Nance, G. Jones, W. G. Sisson, J. C. Rose). In a batch isothermal dehydration run in fluidized bed equipment (Fig. 3.6) at 250°C, the dehydration rate became prohibitively slow when the UF_4 water content reached about 1.3% (Fig. 3.7). AOI formation was negligible. As might be expected, stearic acid (b.p. 383°C) removal was low and carbon remained well above specifications. At 350°C the curves were similar, with slightly higher water removal rates for UF_4 containing naphthalene than for that containing stearic acid. The water contents rapidly approached the desired value of 0.2%.

Analytical results are not complete, but the carbon content of the stearic acid-containing product was 1700 ppm and of the naphthalene-containing product was 660 ppm; the carbon concentrations in the feeds were 7900 and 13,000 ppm, respectively. For the stearic acid-containing product the AOI content was 0.36%, still under the specification value.

The fluidizing nitrogen velocity for the 40-100 mesh $UF_4 \cdot 3/4\ H_2O$ pellet feed, as determined from the characteristic pressure drop curve, was 30 ft^3/hr or 1/6 ft/sec in the 3-in. column (Fig. 3.8). The nitrogen flow rates used in the dehydration runs were greater than twice this value to ensure good heat transfer and mixing.

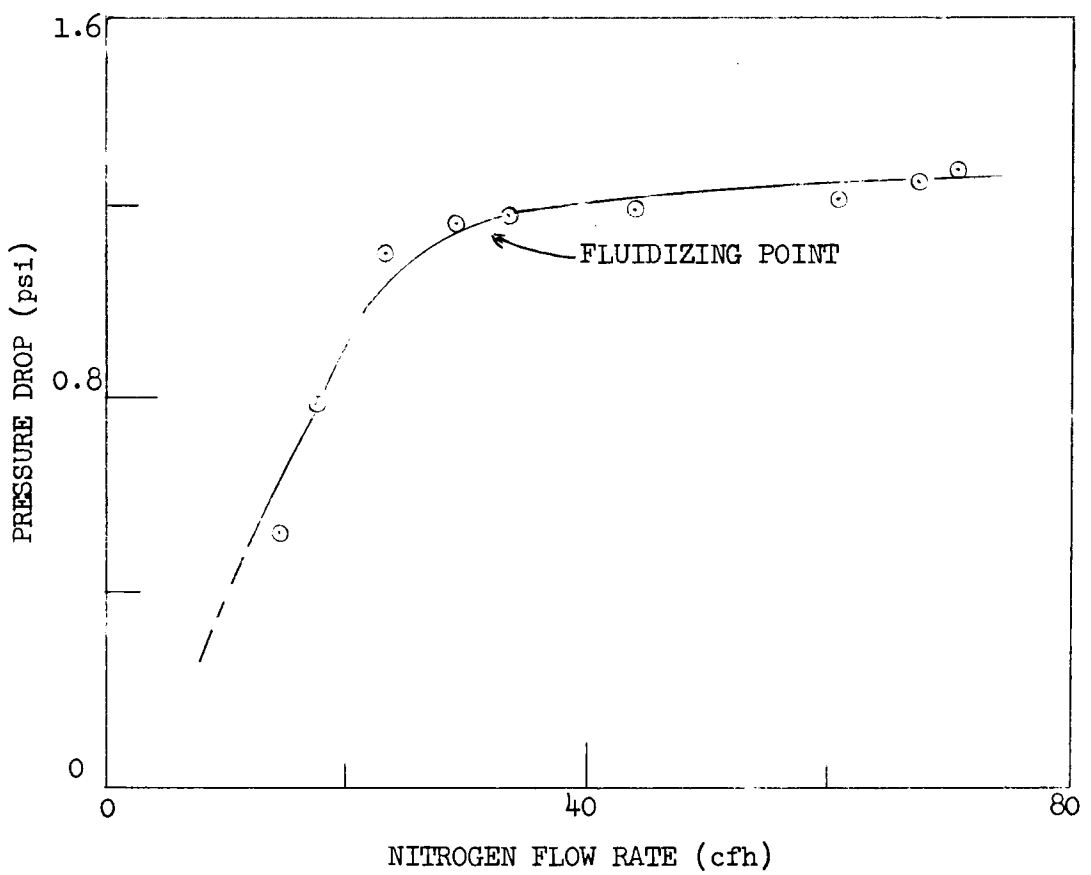

Fig. 3.8. Pressure Drop in Fluidized Bed as a Function of Nitrogen Flow Rate.

PART II. HETEROGENEOUS POWER REACTOR FUEL REPROCESSING

4.0 HEAD-END TREATMENTS FOR SOLVENT EXTRACTION PROCESSING

Various head-end treatments, both chemical and mechanical, are being investigated for preparing fuel elements with difficultly soluble components for solvent extraction. Emphasis is being placed on the development of universal processes for entire classes of fuels.

4.1 Darex Process for Stainless Steel-containing Fuels

In the search for a universal process for stainless steel-containing fuels, the Darex head-end process is being developed intensively. It consists in dissolving the fuel in dilute aqua regia. The chloride may then be stripped off before the uranium is solvent-extracted from the nitric acid solution.

a. Dissolution Studies (J. J. Perona)

Continuous dissolution rates of stainless steel tubing and strips of stainless steel—UO_2 "alloy" as functions of acid feed composition and of ratio of acid feed rate to surface area were reported previously (ORNL-2307 and ORNL-2324).

Metal Ion Concentrations in Dissolver Solutions. The dissolver product metal concentrations in these same runs varied from 20 to 100 g/liter and decreased as the F/S ratio increased (Fig. 4.1). For a given value of the F/S ratio, metal concentrations decreased as the acid feed concentration decreased. As in the case of dissolution rates, metal concentrations did not appear to be significantly affected by small amounts of UO_2 (5.5 to 10%) except in the case of 3 M HNO_3-1.5 M HCl dissolvent, where the presence of uranium increased the metal concentration.

There was some evidence that the product streams with the higher metal concentrations (above 60 g/liter) were unstable solutions, containing some metal in suspension rather than in true solution. However, no significant buildup of solids, except for silica, was observed in the stripping column.

Consumption of H^+ and NO_3^- in Dissolution. For the runs in which unalloyed stainless steel was dissolved, metal dissolution rates were plotted as a function of hydrogen and nitrate ion consumption rates (Fig. 4.2). From the reciprocal slope of the acid consumption plot, it was calculated that an average of 3.90 moles of H^+ was consumed per mole of stainless steel dissolved. Hydrogen was not detected in the off-gases, indicating that the H^+ ions were probably retained as water. The plot of stainless steel dissolution rate as a function of nitrate consumption rate was best represented by two lines, one for 5 M HNO_3-2 M HCl and 3 M HNO_3-1.5 M HCl indicating 1.41 moles of HNO_3 consumed per mole of stainless steel, and the other line for 5 M HNO_3-1.5 HCl and 3 M HNO_3-2 M HCl indicating 0.35 mole of NO_3^- consumed per mole of stainless steel. Nitrate consumption was due to its reduction, as evidenced by NO_2, NO, and N_2 in the off-gases.

[redacted]
ORNL-LR-DWG. 23151

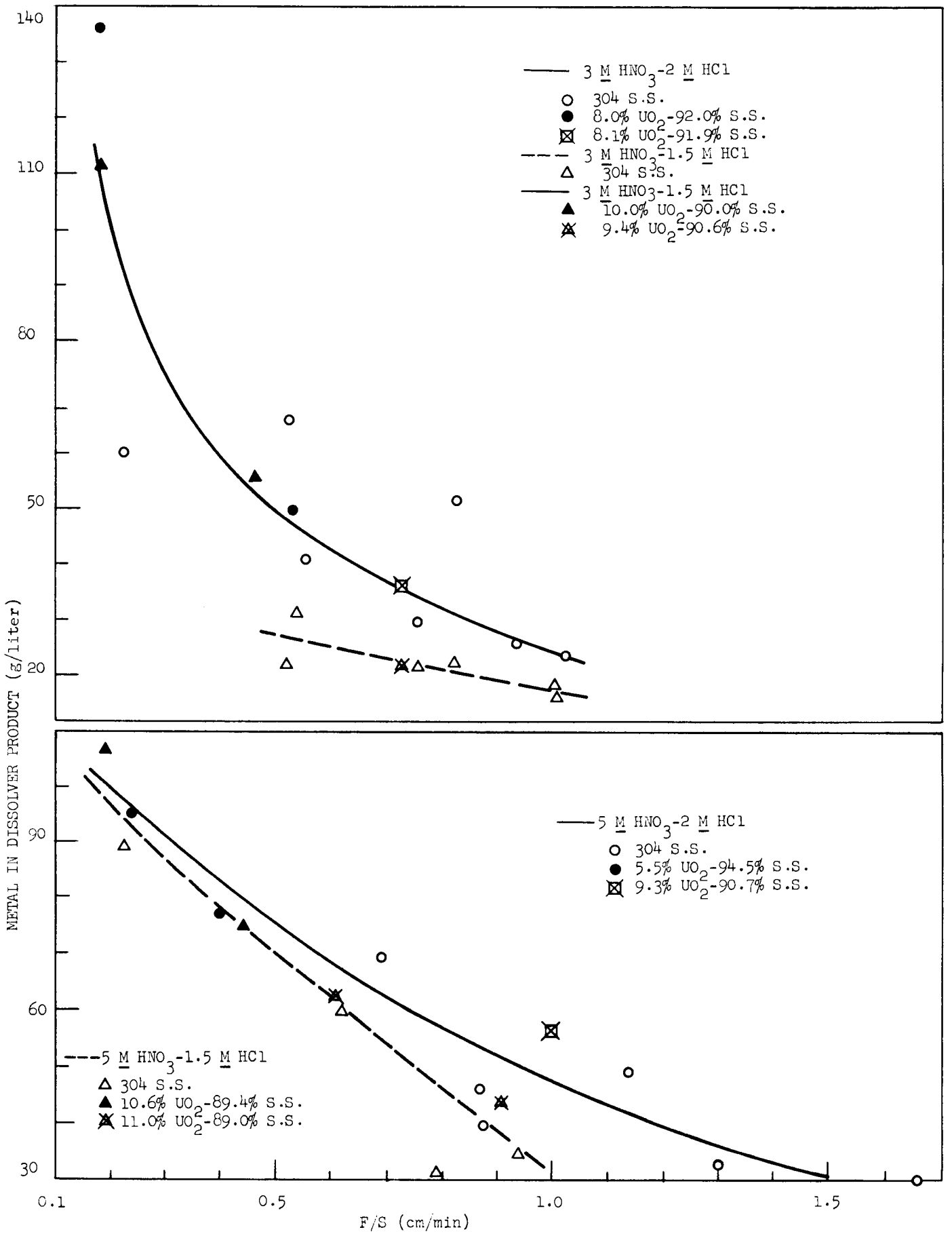

Fig. 4.1. Dissolver Product Metal Concentration as a Function of Ratio of Acid Feed Rate to Surface Area in Dissolution of UO_2-Stainless Steel in Aqua Regia.

UNCLASSIFIED
ORNL-LR-DWG. 23152

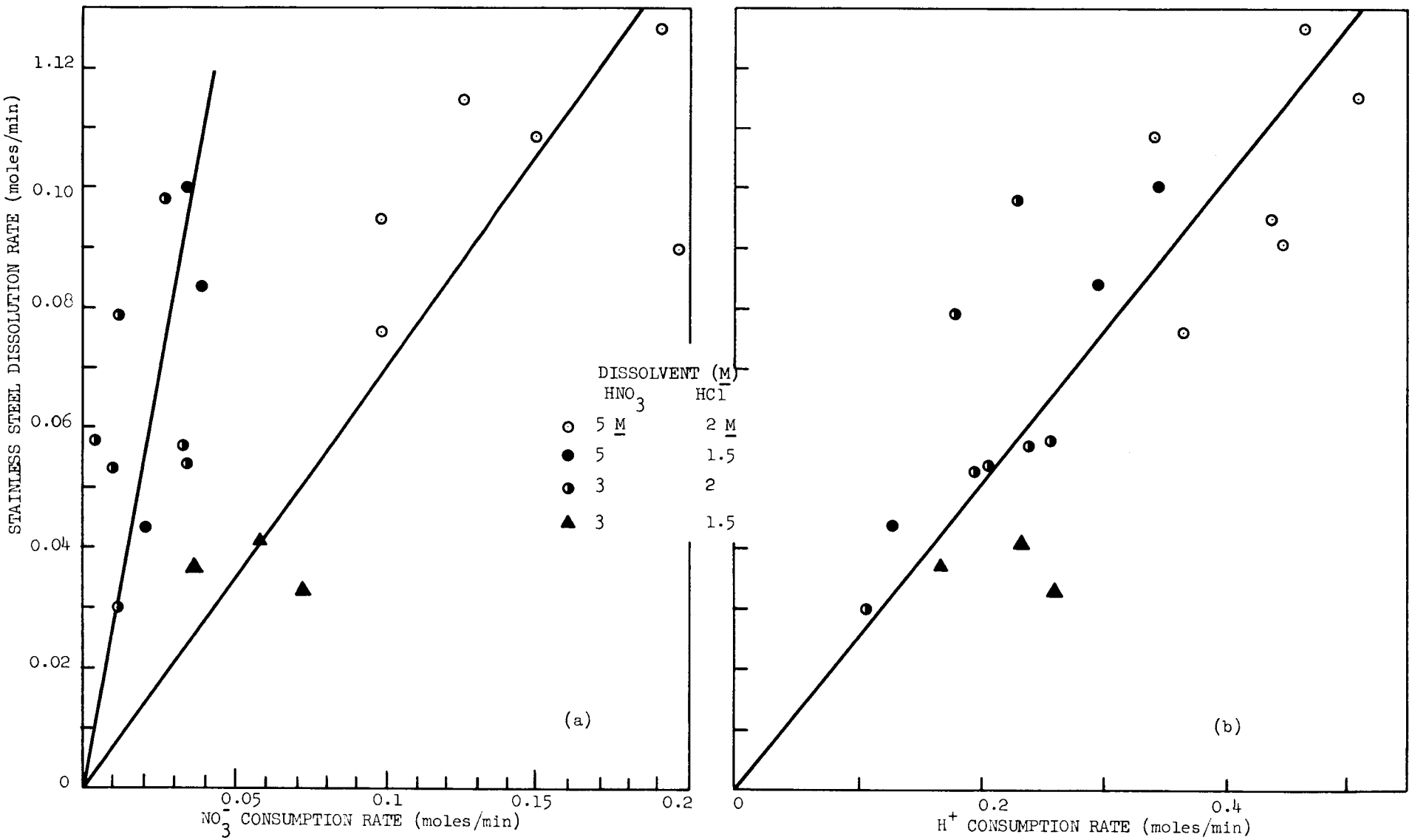

Fig. 4.2 Rate of Dissolution of Stainless Steel in Aqua Regia as a Function of Rate of Consumption of (a) Nitrate Ion and (b) Hydrogen Ion.

b. Chloride Stripping (F. G. Kitts, F. L. Rogers, S. G. Kent, G. B. Dinsmore, J. Beams)

The chloride consentration of the Darex dissolver product must be reduced to a minimum for (1) economy in HCl recovery, (2) to prevent corrosion of the stainless steel equipment in the subsequent feed adjustment and solvent extraction steps, and (3) to avoid a chloride-containing-waste problem.

Stripping with 14 mole % HNO_3 Vapor. In a stripping run with very dilute stripping vapor, 14 mole % HNO_3-H_2O, chloride was reduced to 85 ppm, which is sufficiently low for subsequent processing. However, the number of stages required was greater and the chloride loss was higher at a reasonable V/L ratio than had been assumed. No further work on such systems is contemplated, unless the azeotropic system should prove to be unfeasible. The run was made in tyo cycles, with V/L's of 1.5 and 1.9 in the first and second cycles, respectively. The feed solution was prepared in the Darex dissolver and passed through the column. After the first cycle the chloride concentration was about 1000 ppm with a chloride loss of about 20%. The product from this first cycle was again passed through the column, after which the chloride concentration was approximately 85 ppm.

Operation of Integrated Darex System. As a preliminary test of the operation of an integrated system, the original equipment (stripper, rectifier, dissolver) was modified and operated as an abbreviated loop. Azeotropic stripping vapor was used and the vapors coming overhead from the stripper were condensed and, along with an HCl makeup stream, returned to the dissolver. The chloride was reduced to 15 ppm although steady-state operation was not attained. Since changes were gradual and regular, it is believed that refinement of control, and development of instantaneous analytical techniques may make possible steady-state operation. These features will be incorporated in the integrated system now under construction.

The assembly of the column portion of the integrated system is complete. This assembly includes the reboiler and condenser as used in previous runs, a stripping section of 15 plates, and a rectification section of 8 plates. The dissolver and connecting lines and accessories have not been installed. Duplicate specimens of three proposed materials of construction were placed in representative sections of the column in both the liquid and vapor phases. Groups of specimens were placed on the bottom, on the eighth from the bottom, and the top plates of the stripping section and on the bottom and top plates of the rectifying section. Materials to be tested include tantalum, Vitallium (a high-cobalt alloy), and titanium AX55 including two types of welds of this material. One series of titanium welds was made in a dry box, while the other, a field-type weld, was made with only an inert gas atmosphere.

4.2 Zircex Process for Zirconium-containing Fuels

In an effort to develop a universal process for zirconium-containing fuels, the Zircex process has been selected for intensive development. It consists in hydrochlorinating the fuel to form volatile $ZrCl_4$, dissolving the residue, containing uranium chloride, in nitric acid, and removing or destroying the chloride by distillation prior to solvent extraction. The UCl_3 residue may also be processed further by the Hermex or Fused Salt--Fluoride Volatility Process.

a. Reaction Initiation (J. E. Savolainen, L. M. Ferris)

Vapors of $AlCl_3 \cdot NH_4Cl$ at 450°C readily penetrated the oxide coating on zirconium, while HCl gas alone had no effect on the oxide surface. A 15.5-g oxide-coated specimen with a surface area of about 22 cm^2 showed no weight change after 1 hr exposure at 450°C to HCl gas. Subsequent exposure HCl gas containing a trace of $AlCl_3 \cdot NH_4Cl$ vapor at 450°C resulted in a 1.1-g to (7.1%) weight loss in 40 min. After 3 hr the specimen, which was 2.3 mm thick, was more than 50% consumed and the reaction was completed in less than 4 hr. Specimens that had been subjected to $AlCl_3 \cdot NH_4Cl$ vapor showed pronounced undercutting of the oxide coats, with curling away of the oxide layer so that the base metal was exposed for further reaction.

Oxide-coated zirconium specimens, which had been coated during 120 days exposure to pressurized water at 750°F, were used. X-ray diffraction patterns indicated that the surface layer is the monoclinic form of zirconium dioxide. Microscopic examination of the cross section by the Metallurgy Division showed this oxide layer to be about 0.2 mil thick, which corresponds to the thickness of an oxide film calculated from the average weight increase of 0.76 mg/cm^2.

The use of $AlCl_3 \cdot NH_4Cl$ vapor to initiate the hydrochlorination reaction may increase the corrosion of the hydrochlorinator. The corrosion rate of type 304 stainless steel in $AlCl_3 \cdot NH_4Cl$ vapor in HCl gas at 450°C was 7-15 mils/month for continuous exposure. In a single exposure, the weight loss of the metal varied from 0.005 mil in 20 min to 0.02 mil in 60 min. These rates are not significantly greater than the corrosion rate of stainless steel in HCl gas alone.

b. Vapor Pressure Studies (J. E. Savolainen, L. M. Ferris)

A suggested alternate method to the HCl gas phase reaction for the reprocessing of certain power reactor fuel elements is hydrochlorination in the presence of molten $AlCl_3 \cdot NH_3$. Separation of structural and fuel alloy materials (e.g., zirconium) from uranium and fission products by distillation of the resulting melt is believed feasible. As an initial approach to the determination of liquid-vapor equilibrium diagrams for the desired solutions, vapor pressure measurements were made on two batches of $AlCl_3 \cdot NH_3$. The data obtained conform to equations:

Batch AC-2-1: $\log p_{(mm\ Hg)} = -3244/T + 7.586$

Batch AC-3-2: $\log p_{(mm\ Hg)} = -3607/T + 8.218$

Agreement between the two sets of data was fair, yielding a heat of vaporization of approximately 15 kcal/mole.

Aluminum chloride monoammine was prepared by addition of aluminum metal to molten $AlCl_3 \cdot NH_4Cl$ at 350°C. Only the amount of aluminum needed to react with the excess chloride was added. Pure $AlCl_3 \cdot NH_3$ was separated from high-boiling residues by distillation at approximately 425°C. The two batches of $AlCl_3 \cdot NH_3$ prepared for vapor pressure measurements analyzed as follows:

	Calculated	Found: Batch AC-2-1, avg. of 4	Found: Batch AC-3-2, avg. of 3
NH_3	11.32 wt %	10.70	11.91
Al	17.94 wt %	17.71	15.57
Cl	70.74 wt %	72.12	71.59
Cl/Al mole ratio	3.00	3.10	3.10

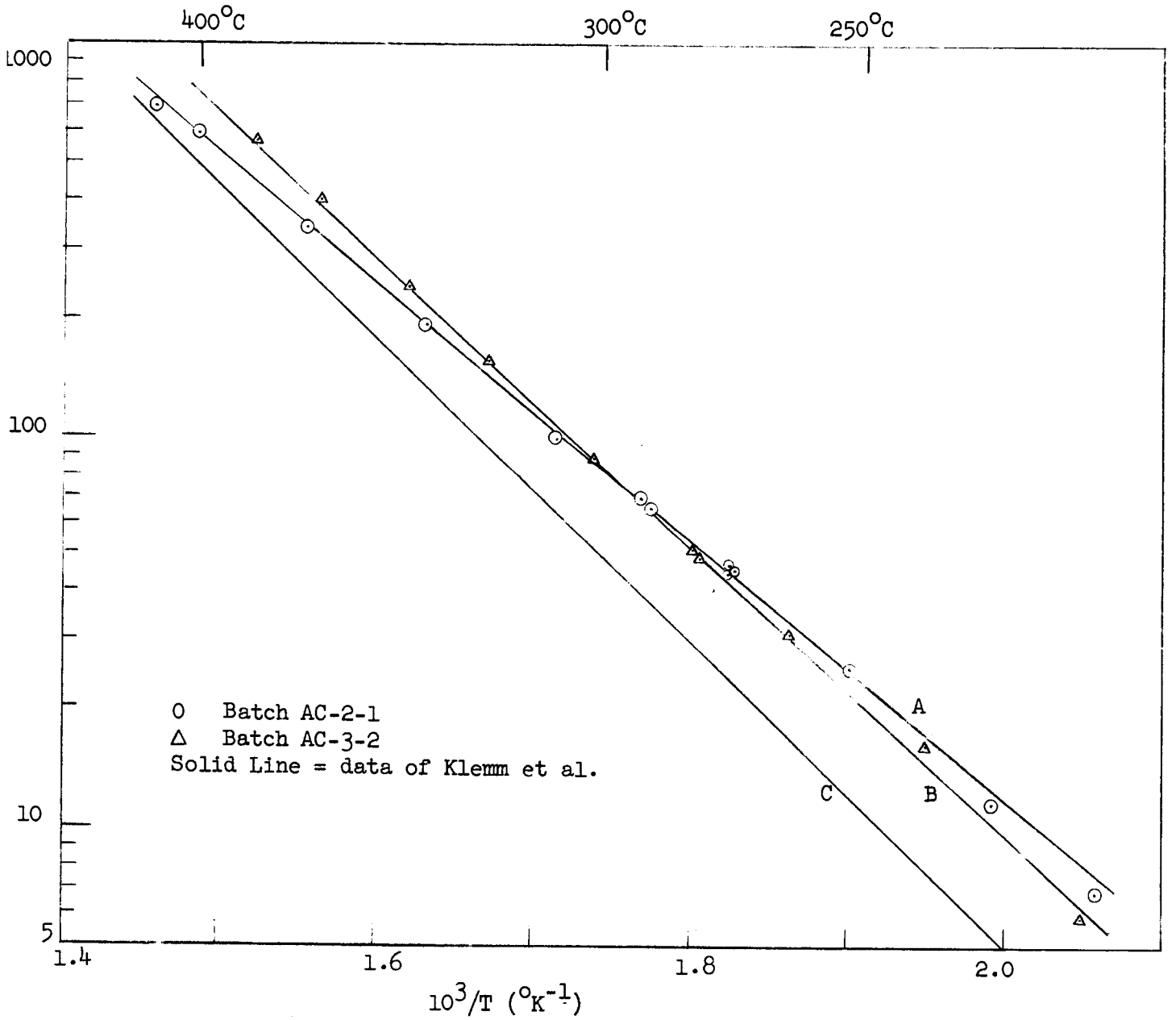

Fig. 4.3. Vapor Pressure of Molten $AlCl_3 \cdot NH_3$.

The vapor pressure measurements (Fig. 4.3) were made with a Pyrex isoteniscope and manometer system similar to that used by Smith and Menzies.* An approximately 50-50 weight % solution of KNO_3 and $NaNO_2$ was used as the constant-temperature bath. Temperature control to 0.5°C was maintained during each vapor pressure measurement. The ammine was loaded into the isoteniscope inside a dry box to prevent hydrolysis of the compound. After extended degassing of the apparatus at approximately 200°C, vapor pressure measurements were made at roughly 20° intervals over the range 200-400°C. The slopes of the plots yield values of 14.8 and 16.5 kcal/mole for the heat of vaporization from batches AC-2-1 and AC-3-2, respectively. Extrapolation of the lines to a pressure of 760 mm Hg leads to values of 418 and 403°C for the normal boiling point. The vapor pressures obtained in this laboratory are somewhat higher than those reported by Klemm et al.**

c. Packed-Bed Hydrochlorinator Studies (J. J. Perona)

Since it is expected that certain reactor fuels may be hydrochlorinated in packed-bed hydrochlorinators, which can operate with appreciable concentration gradients in the gas phase, an experimental study was undertaken to determine the effect of the partial pressure of HCl on the hydrochlorination rate of zircaloy-2. In two runs, decreasing the partial pressure of hydrogen chloride decreased the hydrochlorination rate of zircaloy-2, with an indication of less than first-order dependence of the rate on the partial pressure:

Temperature (°C)	p_{HCl} (atm)	Hydrochlorination Rate ($mg/cm^2 \cdot min$)
474	0.48	0.91
475	0.28	0.63

d. Hydrochlorinator Heat Control by $ZrCl_4$ Recirculation (E. L. Nicholson, A. R. Irvine)

A design study was made to evaluate the possibility of cooling the fuel during a Zircex hydrochlorination by recirculation of solid $ZrCl_4$ to the reaction zone. It appears that this method may permit rapid removal of the reaction heat so it will be possible to hydrochlorinate rapidly with a low fuel temperature. Recirculation of solid $ZrCl_4$ would be similar to catalyst recirculation in petroleum refining operations.

4.3 Alternate Aqueous Dissolution Studies (W. E. Clark, A. H. Kibbey)

Laboratory-scale work is being continued on the evaluation of various alternate fuel dissolution procedures and comparison of these with Darex and Zircex. Particular emphasis is being placed on the chemical decladding of fuels with nitric acid—soluble cores, using sulfuric acid to remove stainless steel clads and hydrofluoric acid to dissolve zirconium clads. Electrolytic dissolution is also being investigated.

---

*Smith and Menzies, J. Am. Chem. Soc., 32: 907 (1910).

**Klemm, Clausen, and Jacobi, Z. anorg. allgem. Chemie, 200: 367 (1931).

a. HF Dejacketing Studies

Dissolution rates of various core and cladding materials in 5 M acid at 90°C were consistently higher than in 12 M:

Material	HF (M)	Temp. (°C)	Dissolution Rate (mg/min•cm^2)	Saturation Conc. (mg/ml) U	F
UO_2	5	90	0.15	0.6	140
	9	90	0.08	---	---
	12	90	0.036	---	---
	12	25	0.062	---	---
U-10% Mo	5	90	0.06	1.46	200
	9	90	0.013	---	---
	12	90	0.025	---	---
	12	25	0.11	---	---
U-2% Zr	5	90	7.1	0.433	9.76*
	9	90	7.73	---	*
	12	90	4.24	---	*
	12	25	1.09	---	*
U-10% Nb	5	90	28.8	0.63	140
	12	90	0.14	---	---
	12	25	0.036	---	---
Zr	5	90	236.5	---	---
Zircaloy-2	5	90	78.7	---	---
	10	25	179	---	---

*Voluminous residue of UF_4 was obtained. At acid concentrations above 5 M practically all water was absorbed by this solid phase.

The temperature coefficient of dissolution in 12 M acid was negative for UO_2 and for the U-10% Mo alloy. Dejacketing of U-2% Zr alloy is obviously impractical because of the formation of voluminous amounts of insoluble UF_4.

b. H_2SO_4 Dejacketing Studies

Data on dissolution rates and saturation values for the constitutents of stainless steel—containing fuel elements indicate that both the stainless steel cladding and the fuel core dissolution rates increase with increasing sulfuric acid concentration. Uranium losses increase as the stainless steel/UO_2 ratio in the fuel increases:

Material	H_2SO_4 (M)	Dissolution Rate ($mg/min/cm^2$) (2 min)	Saturation Conc* (mg/ml)	U Loss to Solution (%)
Type 304L S.S.	4	2.27	---	---
	6	4.66	---	---
	8	5.78	---	---
UO_2	4	---	0.066	0.06
	6	---	0.153	0.11
	8	---	0.420	0.24
U-10% Mo	6	0.94	---	---
APPR fuel element	4	3.10	---	0.31**
	6	4.53	---	0.42-0.57**
	8	5.22	---	---

*After 2.5 hr reflux.

**These experiments were carried out to the point of complete dissolution of the stainless steel constituent of the fuel element. The UO_2 was filtered off, washed with dilute H_2SO_4, and the total U in filtrate and washings counted as loss.

The experiments on the APPR fuel element are of special interest since this element is perhaps the most difficult of the stainless steel—clad fuels to dejacket.

c. Electrolytic Dissolution* (W. E. Clark)

It was originally thought that it might be possible to dissolve all reactor fuel elements in nitric acid by the use of electrolysis, thereby obtaining solutions which could be further processed by existing technologies. It now appears that stainless steel—containing fuels can be dissolved in nitric acid. Dissolution of zirconium-containing fuels in nitric acid has not been found feasible, and HCl is being investigated.

Electrolytic Dissolution of Zircaloy-2. Zircaloy-2 was dissolved in 3 N HCl with and without the addition of various amounts of HF and hydrogen peroxide. Dissolution rates were high, particularly in short runs:

*Work done by Carter Laboratories under a subcontract.

Solvent	Time (min)	Current (amp)	Voltage (volts)	Dissolution Rate (g/amp-hr)	Current Efficiency (%)
3 N HCl	10	40	5	0.91	111
	30	20	2-3	0.93	113
3 N HCl—0.05 M HF	30	20	3.2-3.3	1.01	123
	60	20	5.8-7.2	0.78	195
	10	20	3.3	1.14	139
3 N HCl—0.1 M HF	10	20	3.3	1.07	130
3 N HCl—1 M H_2O_2	10	20	2.8-3.5	1.46	178
3 N HCl—0.5 M H_2O_2	30	20	4.0	0.86	105
3 N HCl—0.5 M H_2O_2 (maintained)	60	20	4.2	0.75	92

The lowered current efficiency in the longer experiments may be partly due to the smaller amounts of material used.

In no case did the metal dissolve completely, and a black metallic sludge formed as soon as the current was turned on. Most of this sludge would not pass through a filter paper, but some particles were colloidal in size and the filtrate was not completely clear. This sludge was soluble in 0.1 M HF and contained about 1.1% of the zirconium. Addition of HF or H_2O_2 to the 3 M HCl reduced the amount of undissolved metal in 10-min trials, but in the longer runs these additives had little effect in reducing the amount of sludge. Resistance of the solution did not rise greatly even during the longer runs. Without external cooling the temperature of the solution in the cell rose from 25°C to 43°C.

4.4 Ion-exchange Studies (I. R. Higgins, W. J. Neill)

Laboratory-scale work is continuing on the application of ion exchange to reactor-fuel-reprocessing head-end operations. Investigations include the use of ion exchange for recovery of uranium and plutonium from chemical decladding solutions of zirconium fluoride and stainless steel sulfate, fluoride, and chloride. Work is planned on the evaluation of ion exchange as a substitute first-cycle operation for solvent extraction for use with highly enriched UO_2—stainless steel sintered fuels dissolved in sulfuric or hydrochloric acid. Ion exchange is adaptable to treatment of these solutions without conversion to nitrates, whereas TBP solvent extraction is not. In connection with ore processing and Excer studies, many of the necessary applicable reactor fuel

reprocessing data are already available. However, information has been lacking on fluoride systems and on the anion-exchange behavior of plutonium, and is discussed here.

Chloride Systems. In a solution of chloride greater than 8 M, tetravalent and hexavalent uranium are sorbed on anion-exchange resin, separated from all stainless steel and fission products. To minimize corrosion, it is desirable to maintain the system in the reduced state, but UO_2 does not dissolve without oxidation and it is difficult to oxidize U(IV) to U(VI) without some oxidation of chloride to chlorine. Uranyl ion exists in the presence of Fe(II), but Pu(IV) does not. Trivalent plutonium is not sorbed by anion-exchange resin in high-chloride solutions, but Pu(IV) is, and very strongly. Both uranium and plutonium may be sorbed if Fe(III) is taken with them.

Fluoride Systems. Fluoride dissolution, useful for zirconium-containing fuel elements, may be used for stainless steel also. Fluoride is not oxidized, as chloride is, when U(IV) is converted to U(VI). Uranyl fluoride is sorbed very well by anion-exchange resin even up to 6 M. The stainless steel products are not sorbed, but zirconium (dead and active) and niobium are sorbed. For a decladding operation, without oxidation, the small amount of soluble tetravalent uranium is sorbed by the resin. If, after fluoride dissolution and oxidation, chloride is added to >6 M and fluoride is reduced to 1-2 M, the uranium is selectively sorbed by the anion-exchange resin and the zirconium and niobium have lost their resin affinity. Plutonyl fluoride, obtained by oxidation with $KMnO_4$, is sorbed on anion-exchange resin in 2 M HF. Conclusive results have not yet been obtained for Pu(IV).

Sulfate Systems. From a sulfate dissolution, the uranyl form of uranium is sorbed selectively from all stainless steel elements, including Fe(III). Zirconyl sulfate is sorbed as well as uranyl. Tetravalent plutonium is also sorbed but has a weak affinity, very similar to that of Fe(III).

4.5 Corrosion Studies (W. E. Clark)

In order to evaluate various materials of construction for the Darex, Zircex, and other head-end processes now under development, corrosion studies on a variety of metals and alloys are in progress. This work is being done under a subcontract with Battelle Memorial Institute. Intensive studies are currently being made for Darex and Zircex; work was started on finding an optimum material of construction for the hydrofluorination operation for the fused fluoride volatility process (Sec. 9.2).

Continued investigation of materials of construction for Darex and Zircex reprocessing equipment has confirmed preliminary estimates that tantalum, titanium, the high-cobalt alloy Haynes 21, and zirconium are fairly resistant to corrosion by nitrate-chloride solutions.

a. Explanation of Titanium Failure

The failure of titanium in the vapor phase above boiling nitric acid through which HCl gas is bubbled was repeated; analyses of both solution and vapor phases indicate that all failures occurred in systems that had been essentially stripped of nitric acid. When the nitric acid was kept at an approximately constant concentration by periodic additions, failure never occurred and the maximum corrosion rate was less than 0.2 mil/month. The initial acid concentrations in the solutions investigated varied from 7 to 15 M. It now appears that titanium can be used for construction of any part of the Darex system since nitric acid or oxides of nitrogen are expected to be present in all parts of the system. The only spot in which an atmosphere of only HCl and water might be found would be in the rectifier-absorber, and this is most unlikely.

b. Hydrogen Embrittlement of Titanium and Tantalum

In boiling 2 M HCl—5 M HNO_3 titanium assumed a potential of 0.50 volt versus the saturated calomel electrode (SCE). When coupled separately to type 304 stainless steel and to uranium, the titanium potentials were 0.03 and -0.07 volt, respectively. Hydrogen would not be expected to be evolved on the titanium at these potentials, and none was found on analysis of the gas evolved from a titanium electrode held at -0.07 volt versus the SCE in this solution. Long-term impressed voltage tests are being carried out under these conditions.

Impressed voltage tests on tantalum are being continued since the voltages assumed by this metal in contact with dissolving 304 stainless steel and uranium were such (-0.24 and -0.53 volt versus the SCE, respectively) that the evolution of hydrogen on the tantalum is virtually a certainty. After six weeks the hydrogen content of the tantalum had increased to 340 ppm. Since tantalum has shown negligible corrosion in all other Darex and Zircex tests except in the Zircex hydrochlorinator, no further tests are contemplated except a continuation of the impressed voltage tests under dissolver conditions.

c. Status Summary of Corrosion Tests on Acceptable Metals and Alloys for Darex and Zircex

Data from tests simulating Darex dissolver conditions are presented in Fig. 4.4. These results bracket those obtained in continuous and batch dissolution experiments except for zirconium, which showed the excessive corrosion rate of 68 mils/month when exposed in a continuous dissolver. Maximum corrosion rates obtained in Zircex dissolver tests are summarized for various materials of interest in Table 4.1. Exposure times are not entirely comparable, but the data outline areas of suitability for the various materials concerned. For example, conventional materials of construction such as Carpenter 20 or one of the 300 series stainless steels may be suitable where the chloride concentration in the dissolver is kept low, as in removal of cladding from a uranium or UO_2 core by hydrochlorination.

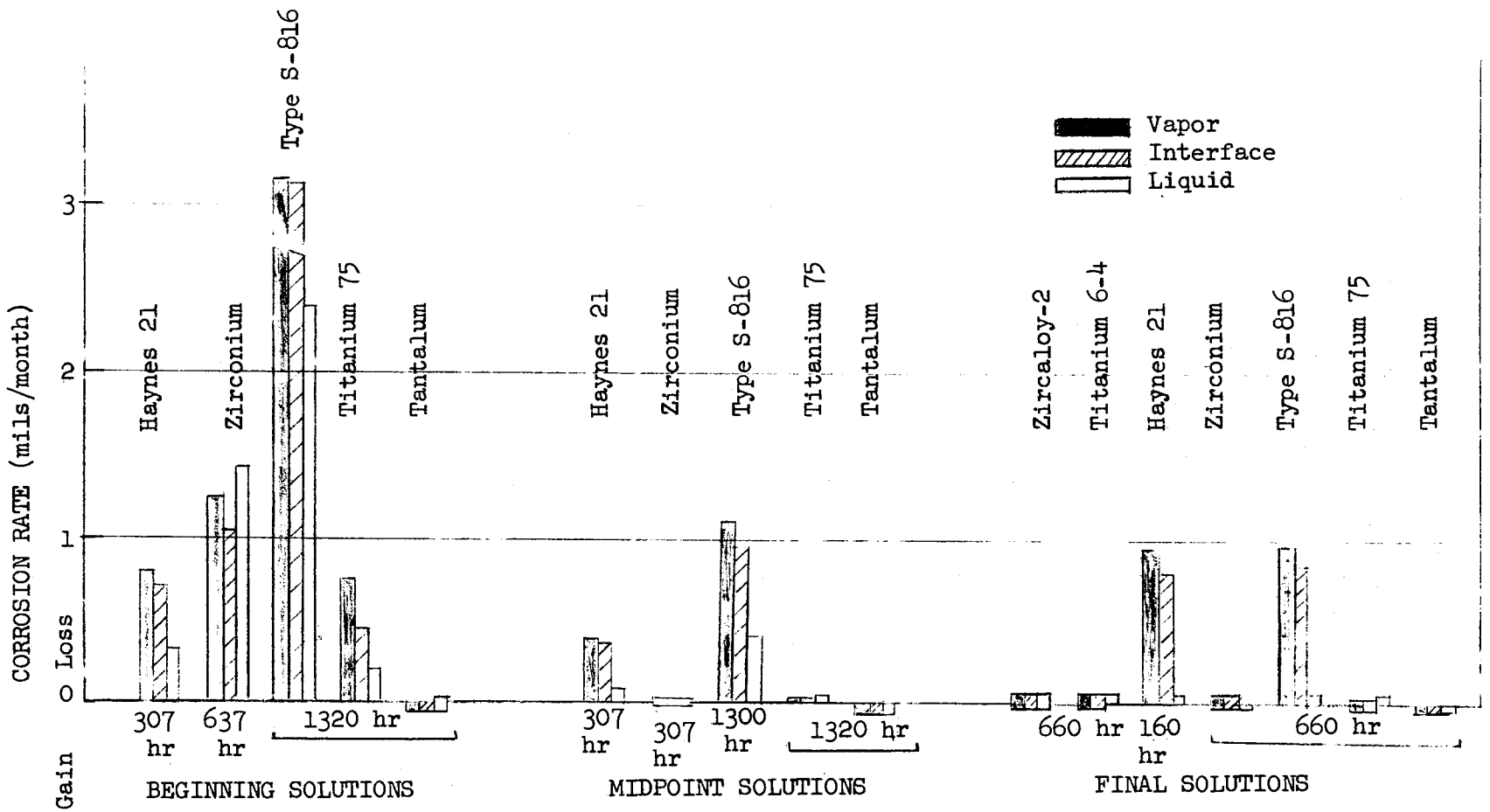

Fig. 4. 4 Rates of Corrosion of Various Metals in Boiling Darex Solutions.

Table 4.1 Summary of Maximum Corrosion Rates from Zircex Dissolver Tests

Solutions were 0.4 M in UCl_3 except the 15 M HNO_3 solution, through which HCl gas was bubbled at the rate of 33 ml/min and the solution which is indicated as containing 500 ppm of chloride.

	Max. Corrosion Rate* (mils/month)					
Material	0 M HNO_3	0.5 M HNO_3	3.0 M HNO_3	5.0 M HNO_3	5.0 M HNO_3 + 500 ppm Cl^-	5.0 M HNO_3
Titanium		0	0.02 I	0.2 V	0.14 V	0.08 L
Haynes 21 (rolled)	88 L	0.54 I	0.15 I,L	0.42 L	0.16 I,L	2.2 L
S-816	31.4 L	0.13 I	0.34 L	1.88 L	0.4 I	17.7 V
Carpenter 20	10.5 L	57 L	0.37 L	28 V	0.13 L,I	1.6 V
Type 304 ELC S.S.	76.7 L				0.17 I	16.2 V
Type 316 S.S.	36.5 L					
Type 347 S.S.					0.18 I	

* V, I, and L = vapor, interface, and liquid, respectively.

4.6 Mechanical Processing

Since many of the newer fuels contain nitric acid—soluble active ingredients clad in nitric acid—insoluble stainless steel or zirconium, removal or destruction of the clad by mechanical (or chemical) methods will permit conventional nitric acid dissolution of the fertile and fissionable materials and subsequent solvent extraction by existing reprocessing technologies. An engineering development program is in progress to determine the feasibility of predissolution mechanical processing.

a. Roll Decladding Studies (G. A. West)

Aluminum-clad Slugs. The aluminum jackets of reactor grade Savannah River slugs could not be completely removed from the slug by rolling with the Mackintosh-Hemphill derodding machine. Sections of the jacket were freed from the uranium core, but the majority remained bonded after 10 to 27 passes through the three sets of rollers. The number of passes required to dejacket reject slugs varied from 3 to 7 and only an occasional slug had bonded sections that would not break. Circular scoring of the aluminum cladding of the reject slugs, with tubing cutters, at the inside edge of the end caps to half the cladding thickness caused the end caps to break off in 3 to 4 passes through the machine. Longitudinal scoring on either side or spiral scoring to half the cladding thickness did not improve decladding. Circular scoring at 2-in. intervals through the cladding allowed complete removal of the clad in three passes.

Ten aluminum jackets (Al-Si bonded) removed from Savannah River slugs by the Mackintosh-Hemphill machine were dissolved. The uranium loss, as determined by analysis of the solution, was 0.07%, confirming the loss reported in ORNL-2324.

Yankee Atomic Fuel Elements. Rolling operations on simulated yankee fuel rods resulted in work being applied on the quartered sections of the 1/4-in. tubing and breaking through the clad at these points. The end caps were not removed by the machine since work could not be applied to the entire cladding. It was concluded that the machine will not successfully declad fuels with ferruled sections of spacer tubes on the cladding. The simulated fuel rods were fabricated from 3/8-in.-o.d. stainless steel with a 27-mil wall, and a 0.311-in.-o.d. steel drill rod core. Simulated ferrules were made from 1-in. sections of 1/4-in.-o.d. tubing welded onto the outer side of the 3/8-in. tubing. The sections of the 1/4-in. tubing were cut in quarter sections to represent cutting for separation of the fuel rods from an assembly.

Effect of Clearance and Liquid Metal Bonds on Roll Decladding. A summary of the decladding by rolling operations, of stainless steel jackets, 30-mil walls, from steel drill rods, at various clearances between the rod and jacket, is as follows:

Initial Clearance (mils)	Bond	No. of Rolling Passes	Remarks
6	none	3 to 7	End caps removed
14	none	1	10 mils expansion
		5	22 mils expansion
		10	23 mils expansion
		22	23 mils expansion; end cap removed
30	water	50	Did not break off end caps
60	lead	35	Did not break off end caps

b. Mechanical Processing Feasibility Study* (E. L. Nicholson)

On the basis of information already received by AM and F, it was decided that preliminary dismantling that did not involve exposure of fuel material could be done either in air or in water, depending on the specific problems involved for each fuel type. For operations involving exposure of the core material, the concept of local, underwater "bathtub" operation was adopted to circumvent some of the problems of a completely dry dismantling operation in a radioactive cave and the disadvantages of operation in a deep pool of water.

Design concepts of fuel dismantling machines already studied are:

1. Universal sawing machine: a milling abrasive disk cutter machine in which the cutting head is suspended somewhat like the cutting head of the DeWalt saw has been designed. Elimination of the overhead bridge envisioned in earlier ORNL concepts by this "overhanging" design allows significant improvement in saw operability.

*Work performed by American Machine and Foundry Corporation under a subcontract.

2. Shakeout machine for APDA core: AM and F determined that the APDA core can be dismantled by a much simpler procedure than that envisioned by the APDA group. After a shallow notch cut has been made at each of the four edges of the fuel, the element can be shaken apart. The fuel pins will be separated from all stainless steel and will not require individual handling.

3. Shearing machine: A pneumatic-cylinder-operated shear that can be adapted to feed and shear either flat plates or several rods was designed.

4. A hydraulic pressure removal device for expulsion of fuel from jackets was designed. This concept utilizes hydraulic pressure to eject fuel pellets from the tubes after end cap removal. No further work is planned on this machine.

5. End cap removal machine: A machine designed to groove the fuel tubes near the ends and remove the end plugs by twisting after the tubes have been rolled in a Machintosh-Hemphill was submitted.

6. Fuel slug removal unit: A machine to push fuel from a rod by a mandrel after end cap removal was designed. This machine slits the jacket, pushes out the fuel, and cuts the jacket into short lengths for disposal. No further work is planned on this machine.

7. Tube peeler: This is a combination machine to loosen fuel cladding by Mackintosh-Hemphill rolls, remove the tube end by a cutoff tool as the tube is spun and advanced by the rolls through the machine, and spiral-slit and "unwind" the jacket as a flat ribbon, which is cut into short lengths for disposal. No further development of this combination machine is planned as the simpler, unit-operation type machines are believed to be more practical.

8. Lathe type spiral grooving machine: A machine was designed to put a spiral score mark on the jacket so that the jacket could be twisted and unwound as a flat ribbon.

In addition to the preceding designs, a "banana peeler" type operation, for which sketches were not available, was discussed. It, along with various combinations of the preceding acceptable concepts, is to be developed. Crusher type rolls to pulverize the core of oxide elements followed by tube shearing may be best. Transfer of oxide to a dissolver is envisioned by means of a steam jet that collects the oxide in the sump (or "bathtub") in which the rolling and shearing is done.

5.0 SOLVENT EXTRACTION STUDIES
(J. R. Flannary, J. H. Goode)

The head-end treatments discussed in Sec. 4.0 are all designed to produce solutions that can be subsequently extracted with TBP in existing or slightly modified Purex, Thorex, or 25 process flowsheets. To guarantee that such is the case, the product solutions from the head-end development work are being extracted in experimental equipment to determine usefulness of these flowsheets for the newer fuels.

5.1 APDA (Detroit Edison) Core Processing

A series of batch countercurrent experiments was made to test the solvent extraction flowsheets proposed for the head-end cycle (Fig. 5.1) and the first or plutonium partitioning cycle (Fig. 5.2) of the Detroit Edison (APDA) U-Mo core processing scheme. Simulated feed was made up to correspond with that produced by a hydrofluoric acid dejacketing of the zirconium cladding and a nitric acid dissolution of the U-Mo alloy core.

Results of batch countercurrent experiments under flowsheet conditions, with the exception that tracer level (2.5×10^6 c/m/ml) plutonium concentrations were used, showed that approximately 4 extraction stages are required to reduce uranium losses to the raffinate to 0.01% and about 6 stages to reduce the plutonium losses to the same level. Approximately 5.5 stripping stages are necessary to reduce both uranium and plutonium losses to the stripped solvent to 0.01%. The experiment was carried out with a molybdenum concentration of 1.02 mg/ml in solution and the remainder of the 1.28 mg/ml as a suspension of MoO_3 in the feed; no emulsification was observed. The 8% TBP solvent extracted 0.005 g of zirconium per liter at the feed plate and contained the same amount after 4 scrub stages. About 2 ppm of molybdenum was found in the solvent at the feed plate, but was completely removed in 4 scrub stages. The acidity of the HAP and HCU were 0.18 and 0.52 M, respectively. Distribution coefficients at the feed plate for uranium and plutonium were 7.20 and 2.78, respectively.

The first, or partitioning, cycle for the APDA core would use as feed the uranium-plutonium product from the head-end cycle (HCU), which had been adjusted in acidity and concentration by the addition of 12 M HNO_3. In batch countercurrent experiments under flowsheet conditions, with plutonium tracer, the feed plate distribution coefficient for uranium was 7.91 and for plutonium was 3.74. The difference between the plutonium distribution coefficient in this cycle (3.74) and the head-end cycle (2.78) is probably due to the complexing action of the fluoride in the head-end cycle feed. About 5 extraction stages were necessary to reduce both uranium and plutonium losses to the raffinate to less than 0.01%.

The plutonium was partitioned (feed plate distribution coefficient 0.004) from the uranium in the 1B column in 5 partitioning stages: 4 back-extraction stages reduced uranium contamination of the plutonium product (1BP) to less than 0.01%. The acidity of the 1BP was 1.8 M.

5.2 Extraction Reagent Performance (D. W. Sherwood)

The Co-60 garden at ORNL was calibrated with ceric dosimeters in a holder that will position nine samples (120 ml each) in the space. The average dose rate on April 19, 1957, was 3.02 watts/liter, varying from 3.46 in one corner to 2.74 in the opposite corner. The center position showed the average dose. In a recheck on May 2, 1956, the center dose rate was 2.96 watts/liter. This dose rate may not be expected to remain steady and should be checked before each use of the garden. Positioning should be such that the average dose is assured.

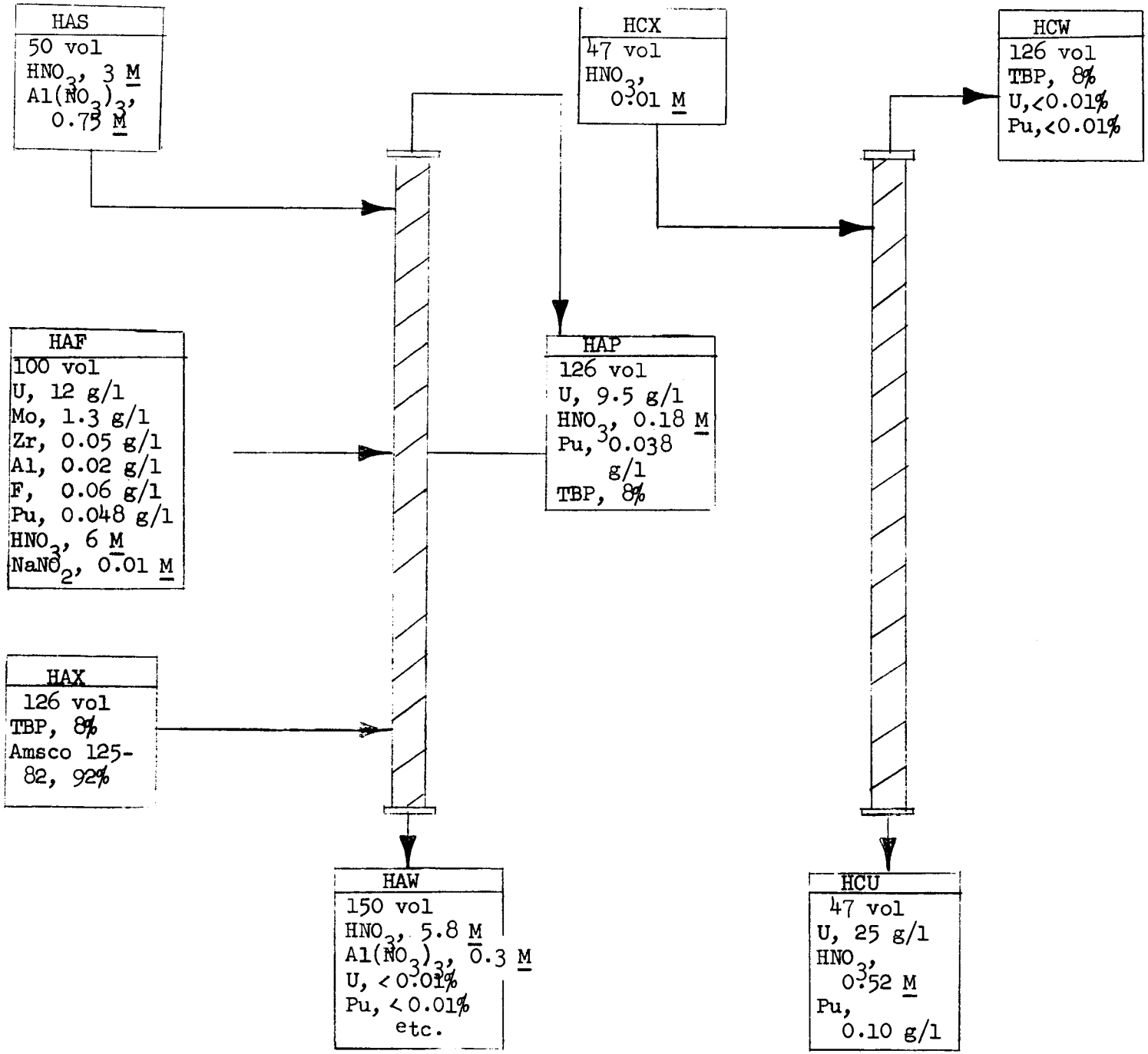

Fig. 5.1. Head-end Cycle, APDA Core Process.

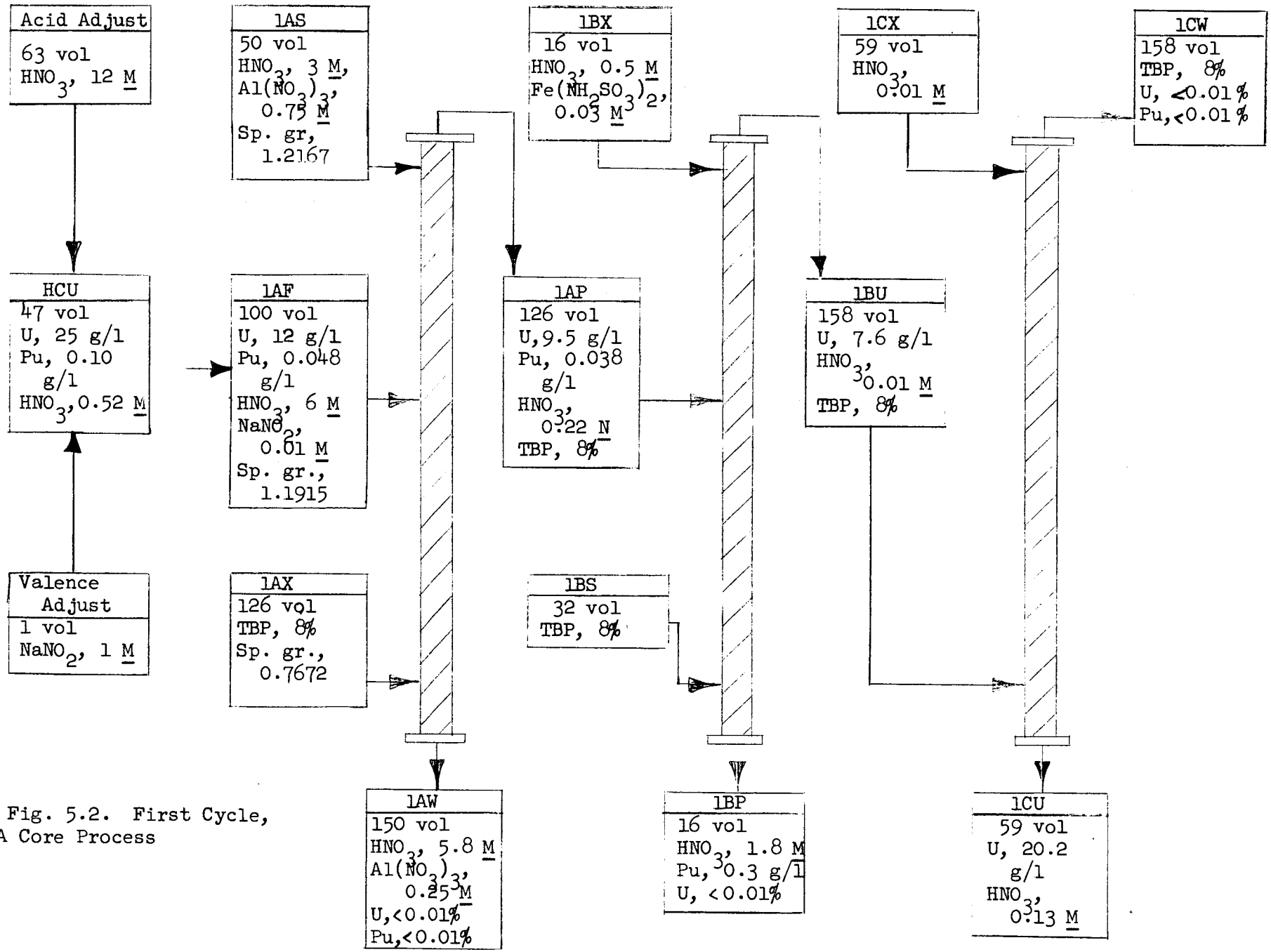

Fig. 5.2. First Cycle, APDA Core Process

Irradiations of TBP with Amsco, benzene, and xylene mixtures, both anhydrous (silica gel dried) and in the presence of water or 3 M HNO_3, are in progress in the garden to further evaluate the protection afforded by aromatic molecules. Evaluation of the results will be both by analytical procedures and application tests simulating performance demand in the extraction processes. Approximately 575 watt-hr/liter dosage will be given these materials, both to enable easier chemical detection of products and to exaggerate radiation damage expected in application to processes.

Preliminary assembling of information and drawings for establishing a laboratory Co-60 irradiator is under way. It is expected that approximately 1000 curies of Co-60 will be required, permitting exposure at the 10^6-r/hr level.

A bibliography relating to radiolysis of solvents for extraction processes has been issued as ORNL-CF-57-4-68.

6.0 METAL RECOVERY PLANT, URANIUM AND NEPTUNIUM

(W. H. Lewis, R. E. Brooksbank, W. R. Whitson, C. D. Hylton, J. L. Matherne, P. A. Goudreau)

6.1 Plant Operation

The pilot plant investigation of the recovery of Np-237 as a Purex byproduct was concluded as a total of 8.0 tons of uranium and 3.54 g of neptunium were recovered from Canadian uranyl nitrate solution. Based on losses, neptunium recovery was 91.8% with 4.4% lost in the first cycle raffinate and 3.8% remaining with the uranium product. Approximately 1.6 tons of uranium, which was contaminated with neptunium as a result of the neptunium-uranium partitioning study, was recycled through the plant.

The last phase of the demonstration was made by processing 1080 gal of feed spiked with 1 g of Np-237 by a first cycle Purex flowsheet. During the 3-day run, the necessity of $NaNO_2$ as a neptunium valence adjustment reagent was demonstrated* by discontinuing the addition of $NaNO_2$ to the IA column. This change resulted in IAW neptunium losses that averaged 98% after five column volume changes. Normal neptunium extraction of 99.5% was re-established by resuming $NaNO_2$ addition.

The recovery of 1900 lb of depleted uranium and 19 g of neptunium from 3188 lb of K-25 fluorination ash was completed. Seventeen individual dissolutions, each requiring 14.5 hr, were made by dissolving the ash in 1.8 M $Al(NO_3)_3$ —1.0 M HNO_3. The flowsheet used is given in ORNL-2235. Approximately 166 hr of continuous column on-stream time was accumulated during the program. Satisfactory coextraction of uranium and neptunium in the IA column was indicated by AW stream neptunium losses that were below the limit of analytical detection; uranium losses to this stream were less than 0.01%. Neptunium was partitioned from the uranium in the organic in the IB column by maintaining a IBP HNO_3 concentration of 1.09 M. Flowing stream neptunium balances averaged 89%, with the neptunium product being separated from the uranium by a factor of 1.7×10^5.

*This is not in complete agreement with previously reported results; the discrepancy is probably explained by a time factor.

One shipment of specification grade 2 M uranyl nitrate solution containing a total of 1.9 tons of uranium was made to Y-12 for subsequent processing. Approximately 1.4 tons of spent fuel elements from BNL was received and stored in the canal.

6.2 Equipment Performance

The IDF pump which is used to pump uranium product solution to the packaging area gave erratic performance and required the replacement of a stainless steel diaphragm. This unit has been in service for six months.

The IA and IB column interface control valves were removed from the system between programs and repaired to minimize "past-the-seat" leakage.

6.3 Construction and Modifications

An 800-ml surge pot equipped with specific gravity probes was installed in the plutonium product line. Installation of this unit will permit the withdrawal of a more concentrated plutonium cut during the elution cycle.

A concrete pad and saddle support was constructed and a 2300-gal tank was installed for storing decontaminated uranium product solution prior to shipping to Y-12.

7.0 THOREX PROCESS

In the Thorex process thorium and U-233 are recovered from irradiated thorium and decontaminated from fission products sufficiently to permit subsequent direct processing. A nitric acid solution of the irradiated thorium is continuously processed through two solvent extraction decontaminating cycles, in which the thorium and U-233 are extracted by tributyl phosphate in a kerosene-type diluent (Amsco). They are co-stripped with dilute nitric acid in the first cycle, and are re-extracted and partitioned in a second cycle. The U-233 is finally purified by ion-exchange.

7.1 Pilot Plant Performance (E. M. Shank, J. R. Parrott, W. T. McDuffee, G. S. Sadowski, R. H. Vaughan, O. O. Yarbro, C. V. Ellison, J. F. Manneschmidt)

Run HD-25 was terminated after 610 hr of intermittent operation with irradiated feed at 44% efficiency, 150 kg/day throughput. The overall operating efficiency, including recycle throium product, was 60%. Operation was satisfactory except for interruptions in the run resulting from flooding of the 2C-column. The plant was shut down and the feed preparation equipment decontaminated preparatory to modifications required for processing of short-decayed thorium and for improving operation. The radiation intensity of the feed adjustment equipment was reduced from 9500 mr/hr to 200 mr/hr with seven internal acid--caustic-tartrate decontaminating cycles. Decontamination of the acid recovery system and the 1AF tank was slowed by localized contamination, which has resisted standard decontaminating solutions. The average radiation exposure to 25 operating personnel was 47 mrep/man-week.

About 1400 kg of irradiated and 80 kg of recycle thorium were processed, by the co-decontamination flowsheet. Approximately 1300 kg of thorium product was recovered and 3100 g of U-233 product was sorbed on an ion-exchange column. About 2560 g of U-233 meeting radiation specifications was isolated, giving a total inventory of acceptable uranium product of 11,800 g. (Owing to the buildup of U-232 decay daughters, all product on hand will require a solvent-extraction cleanup cycle prior to shipment.) An additional 1600 g of uranium is currently sorbed on the ion-exchange resin.

Solvent-extraction losses averaged 2.1 and 1.1%, respectively, for thorium and uranium. Extraction losses accounted for 96% of the thorium loss. About 55% of the uranium loss occurred in the thorium product and 32% in the 2CW; the 2CW loss is recoverable by direct recycle as the 1AX. The final gross gamma decontamination factors observed during run HD-25 averaged 2.3×10^4 for thorium and 1.2×10^5 for uranium:

	Decontamination Factor					
	First Cycle		Second Cycle		Overall	
Contaminant	Th 1AF/1CP	U 1AF/1CP	Th 2AF/2BT	U 2AF/1F	Th 1AF/2BT	U 1AF/1F
Gross γ	870	1300	25	170	2.3×10^4	1.2×10^5
Pa	680	1100	10	140	3900	4.0×10^4
Ru	1100	1600	9	120	9400	6.2×10^4
Nb-Zr	500	820	45	300	1.7×10^4	8.2×10^4
TRE	2.5×10^4	3.5×10^4	20	1100	9.7×10^4	4.4×10^6

The gross gamma decontamination factors are about 5-fold greater than those in run HD-24.

The activity spectra for both products met tentative specifications:

	Activity (c/m/mg)			
	Thorium		Uranium	
Contaminant	Specifications	Observed	Specifications	Observed
Gross γ	260	60	9000	5000
Pa γ	30	3	1000	60
Ru γ	40	5	280	250
Nb-Zr γ	45	20	8000	1500
TRE β	40	10	450	150

Periodic detergent-washing of the 2C-column improved operation only temporarily. Other changes to the 2C-column system, likewise only partially effective, were: (1) bypassing the pulse pump restrictor with a check valve; (2) replacing the pulse pump with a remotely operated metering pump; and (3) enlarging the pulse restrictor from 1 in. to 2 in. ips. Three Lapp Pulsafeeder pumps failed because of diaphragm rupture.

The second-cycle feed two-stage airlift was modified by eliminating the common entry line from the 2AF pump and the second stage to the feed head pot and by venting the supply line to the second stage airlift. Tests with water indicated a maximum transfer rate of 38 liters/hr. Feed metering was maintained within 3% during a 100-hr test.

In studies on filtration of recovered solvent with Fulflo filters, glass fiber medium, breaking times were faster with filtered solvent. Large amounts of solids were filtered from the recovered solvent.

7.2 Pilot Plant Modifications (W. R. Winsbro, W. T. McCarley)

The design of the third uranium cycle was completed, requiring a total of 85 drawings and about eight months of engineering time.

The process design for the 1AWC decay facility, required for storage of the 1A-column raffinate from the short-decay processing program, was started. Thirteen drawings will be required for the design and are scheduled for completion during June 1957. The 5000-gal vessel was received, but acceptance was deferred owing to the use of two plates in the fabrication of the vessel with thickness variations in excess of those allowable by the specifications and to incomplete certifications on the materials of construction.

Installation of the uranium storage facility was completed and the equipment checked, cleaned, and calibrated. The sample conveyor system was completed and initial run-in was started. The continuous interface purge system is 30% complete.

7.3 Flowsheet Improvements (R. H. Rainey, A. B. Meservey, R. G. Mansfield, R. C. Lovelace)

Decalin as TBP Diluent. The increased thorium concentration obtainable at the feed plate in the extraction column with Decalin as the diluent for TBP, and the beneficial effect of this increased thorium concentration on ruthenium decontamination, were reported in April (ORNL-2324). In a series of single organic-aqueous contacts the beneficial effect of concentration on the other fission products present was also demonstrated (Fig. 7.1). As previously reported, flowsheets using Decalin containing 90-100 g of thorium per liter gave a factor of about 3 improvement in decontamination from gross fission products.

Decontamination from Ruthenium and Thorium Distribution Coefficients as Functions of Feed Acidity. The decontamination from ruthenium and the thorium distribution were dependent on the system acidity in single organic-aqueous contacts, with feed varying from 0.6 N acid deficient to 0.8 N acid (Fig. 7.2). The decreasing decontamination from ruthenium with increasing acidity has been known since early Thorex process development work. In further studies to obtain quantitative data with ruthenium and thorium in the aluminum nitrate—nitric acid system, the ruthenium decontamination decreased continuously from about 14 at 0.7 N acid deficiency to 2 at 0.8 N acid. The thorium distribution coefficient increased continuously throughout the acid deficiency range, reached a maximum at about 0.6 N acid, then decreased at higher acidity owing to competition from the extracted acid. The activity in the feed for these experiments was 90% ruthenium; the decontamination factors were determined by gross α counting.

Decontamination from I-131. An unidentified oxidation state of iodine occurred in a new batch of I-131 tracer, which could not be made nonextractable by increasing the concentrations of iodide in the scrub (IAS) solution containing 0.005 M $NaHSO_3$ in addition to the usual 0.5 M $Al(NO_3)_3$ and 0.003 M $PO_4^{\equiv}$:

KI in Scrub, M	I-131 D.F.
0	1
0.001*	10
0.01*	9
0.1*	17

* Contained 0.005 M $NaHSO_3$

The unidentified iodine species could not be isotopically diluted with cold iodide, iodine, iodate or periodate at room temperatures. However, when 0.01 M KI was added prior to feed adjustment, decontamination was satisfactory:

I-131 D.F. in Standard Feed Adjustment	Additives to Feed	Additives to Scrub	I-131 D. F. in Solvent Extraction	Total I-131 D.F.
7.6	---	---	4.7*	36
	0.05 M $NaHSO_3$	---	4.7*	36
	0.005 M KI, 0.05 M $NaHSO_3$	0.01 M KI, 0.005 M $NaHSO_3$	100[b]	760
	---	0.01 M KI, 0.005 M $NaHSO_3$	328**	2.5×10^3
5.5	0.00037 M Hg^{++}	0.01 M KI, 0.005 M $NaHSO_3$	332**	1.8×10^3

* One extraction and three scrub stages.
** Countercurrent batch extraction.

The presence of 0.00037 M $Hg(NO_3)_2$, one tenth of flowsheet concentration, did not affect the I-131 decontamination.

Effect of Iodide and Sulfite on Gross Fission Product Decontamination. The addition of iodide and sulfite to the feed (1AF) and the scrub (1AS) to improve decontamination from ruthenium and I-131 did not affect the product decontamination from gross fission products in countercurrent batch extractions. A synthetic feed, containing 3×10^6 γ c/ml/min of gross fission products, was heated to 60°C with 0.01 M $NaHSO_3$, cooled, and contacted with scrub containing 0.01 M KI and 0.005 M $NaHSO_3$. The gross γ decontamination factor was 1.55×10^3. A control run using standard conditions without additions gave a gross γ decontamination factor of 1.50×10^3. It was reported last month (ORNL-2324) that these additives did not affect the Pa-233 decontamination.

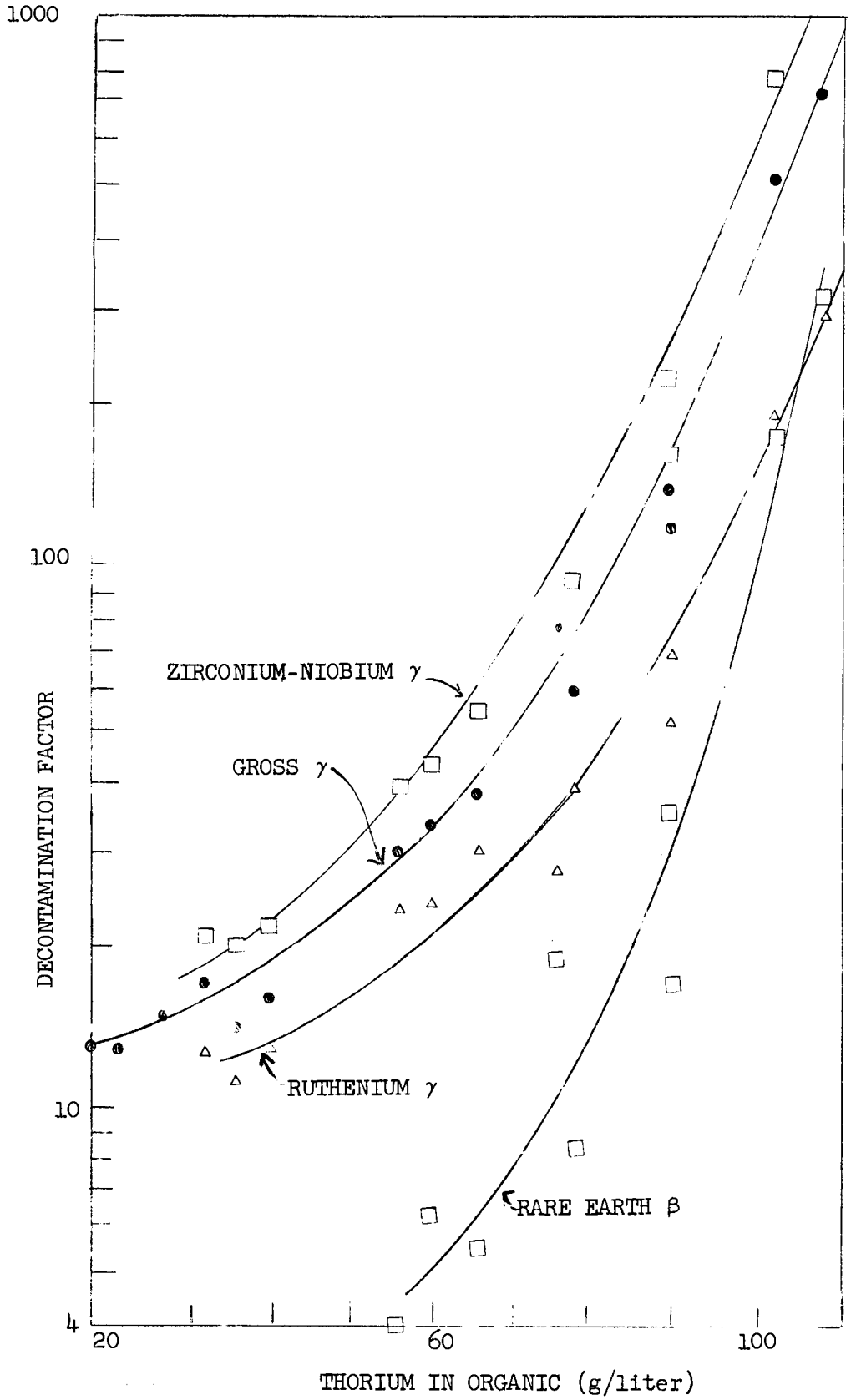

Fig. 7.1. Decontamination Factor of Thorium Product (Thorex Process) as a Function of Thorium Concentration of Organic Phase. Solvent: 42.5% tributyl phosphate—57.5% Decalin; aqueous phase: 0.5 M $Al(NO_3)_3$ containing thorium nitrate.

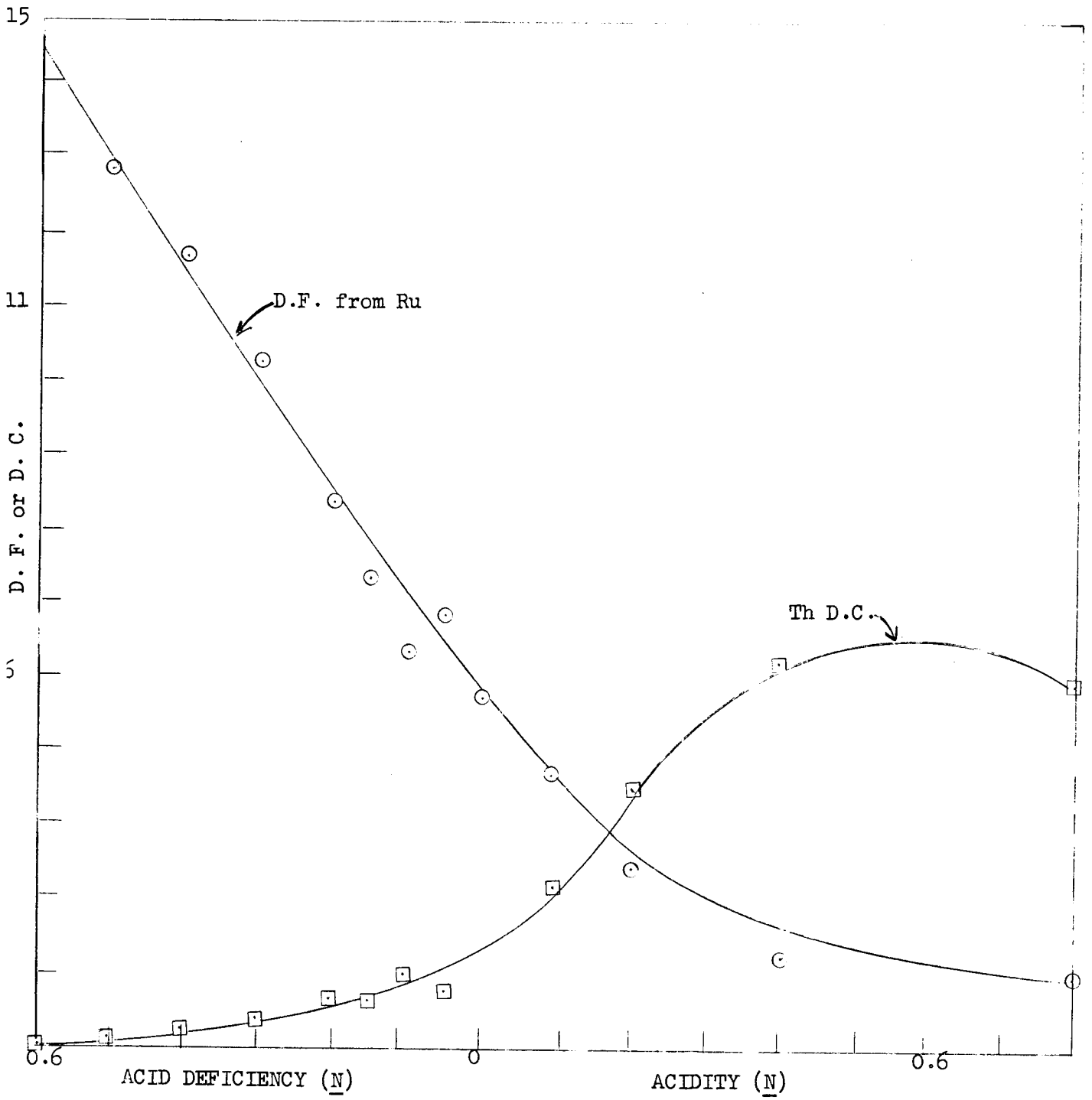

Fig. 7.2. Thorium Distribution Coefficient and Decontamination Factor from Ruthenium as a Function of Feed Acidity in Single Organic-Aqueous Contact.

7.4 Component Studies (R. J. McNamee)

An interface recycle system, similar to that for the 1A-column (ORNL-2228 and 2324) will be installed on the AP stream for further product cleanup. Options are also provided for passing the scrub (1AS) through these systems prior to entry into the column and for introducing the contaminated aqueous return stream further down the column. A cooler will be installed to be used, if necessary, as a further aid in breaking severe interfacial emulsion. The organic-aqueous interface in the separators will be maintained by a water-purge differential pressure probe, in each phase, actuating a control valve on the aqueous discharge line.

A correlation was found between the severe emulsification encountered in a series of earlier runs and a lower value of the surface tension of the scrub used in that series of runs.

8.0 NONAQUEOUS PROCESSES

Nonaqueous processing methods are being investigated in an attempt to find cheaper and more operable methods for recovering source and fissionable materials from reactor fuels.

8.1 Hermex Process (O. C.Dean, C. P. Johnston)

The Hermex process is a zero-valence-state process for recovering and decontaminating uranium from scrap metal or alloys. The uranium is dissolved in boiling mercury, from which it is separated by filtering, pressing, and vacuum retorting.

Control of Atmosphere Composition. Oxygen in the system must be rigorously controlled for satisfactory decontamination. The vacuum system (Fig. 8.1) must produce and maintain at least 1 μ Hg pressure. An inert gas purge system with an oxygen content of 10 ppm or less is necessary, together with instruments to indicate the oxygen and water vapor present. A continuously indicating Beckman hygrometer was ordered for determining the dew point of the purge gas and will permit total oxygen determination by a "difference" procedure by catalytically combining oxygen with hydrogen to convert all the oxygen to water, which will be detected by the instrument. The vacuum gage used is a Hastings gage with a range of 1000-1 μ Hg, the lower range of which is not sufficiently accurate so that a more accurate instrument, such as a National Research Corporation Model, will be required. An oil diffusion pump has been hooked into the system in such a way that it can be bypassed.

The inert gas passes through hot copper, Drierite, Ascarite, and hot uranium turnings before entering the dissolving section (Fig. 8.2) of the apparatus. A cold trap between the vacuum system and the dissolver removes mercury and other condensable gases. Water cooling lines are wrapped to protect the packing in the valve stems. The capacity of the dissolver is approximately 1 liter and is to be operated with 50% freeboard. The capacity of the amalgam cooler is over 500 ml. Amalgam can be moved through the filter, the dissolver, and cooling pot by either inert gas pressure or vacuum. The filter can be valved off and removed to an inert-gas dry box for unloading.

8.2 Fused Salt—Fluoride Volatility Process

Design Studies (R. P. Milford, J. B. Ruch, S. Mann). Design of all components for the High Level Volatility Laboratory was completed. Complete assembly of the instrument panels is expected by June 30, 1957.

Fabrication of the SIR-STR carrier-charger underwater drawer operator was completed; the unit will be shipped to Idaho for testing with the Idaho SIR-STR carrier.

Test specimens and equipment have been shipped to Battelle for corrosion tests. ANL personnel in a discussion here indicated that they intend to concentrate on graphite as a material of construction for the hydrofluorinator and will essentially discontinue further tests of metals. They will also study corrosion in the fluorination step, using F_2 and aiming at a material more satisfactory than L-nickel. In-plant fluorinator corrosion studies will be done at ORNL.

Design and installation of a pilot plant prototype hydrofluorinator are in progress. Equipment arrangement and piping design are nearly completed.

Pilot Plant Studies (W. H. Lewis, J. T. Long, J. E. Bigelow, F. N. Browder, W. H. Carr, R. B. Keely, F. W. Miles, S. H. Stainker, C. L. Whitmarsh). First pilot plant tests, runs C-6 and C-7, of the integrated flowsheet were made with nonirradiated salt, primarily to determine the operability of the plant and uranium losses. In Run C-6, 98.6% of the uranium entering the system was recovered in the product cylinder. In Run C-7 only 77.4% of the uranium was recovered in the product cylinder; a cast-brass fitting split, resulting in UF_6 leakage to the atmosphere. Both runs consisted of five steps: (1) charging salt through the charge melt vessel into the fluorinator, (2) fluorination and absorption, (3) waste salt transfer, (4) desorption and cold trapping, and (5) product transfer.

In the first step, salt containing approximately 10 kg of depleted nonirradiated uranium was charged to the fluorinator; in one run, difficulty was encountered in melting a plug in the transfer line.

Fluorination was carried out at a fluorine flow rate of 15-20 std. liters/min. In run C-6, the fluorine/uranium mole ratio was 5/1; approximately 0.45% of the uranium remained in the waste salt. It is thought that collected "gunk" in the bottom of the fluorinator prevented adequate mixing, resulting in low efficiency. In run C-7, after the fluorine/uranium mole ratio had reached 3.2/1, the waste salt contained 88 ppm uranium; the salt was then sparged with nitrogen for 30 min, reducing the uranium in the waste salt to 4.5 ppm, approximately 0.01% of that in the feed. In both runs the initial temperature in the first absorber was 60-75°C; during fluorination the temperature of the first absorber rose to approximately 200°C. In run C-6, 0.06% of the uranium passed through the absorber; in run C-7 0.01% passed through without being absorbed.

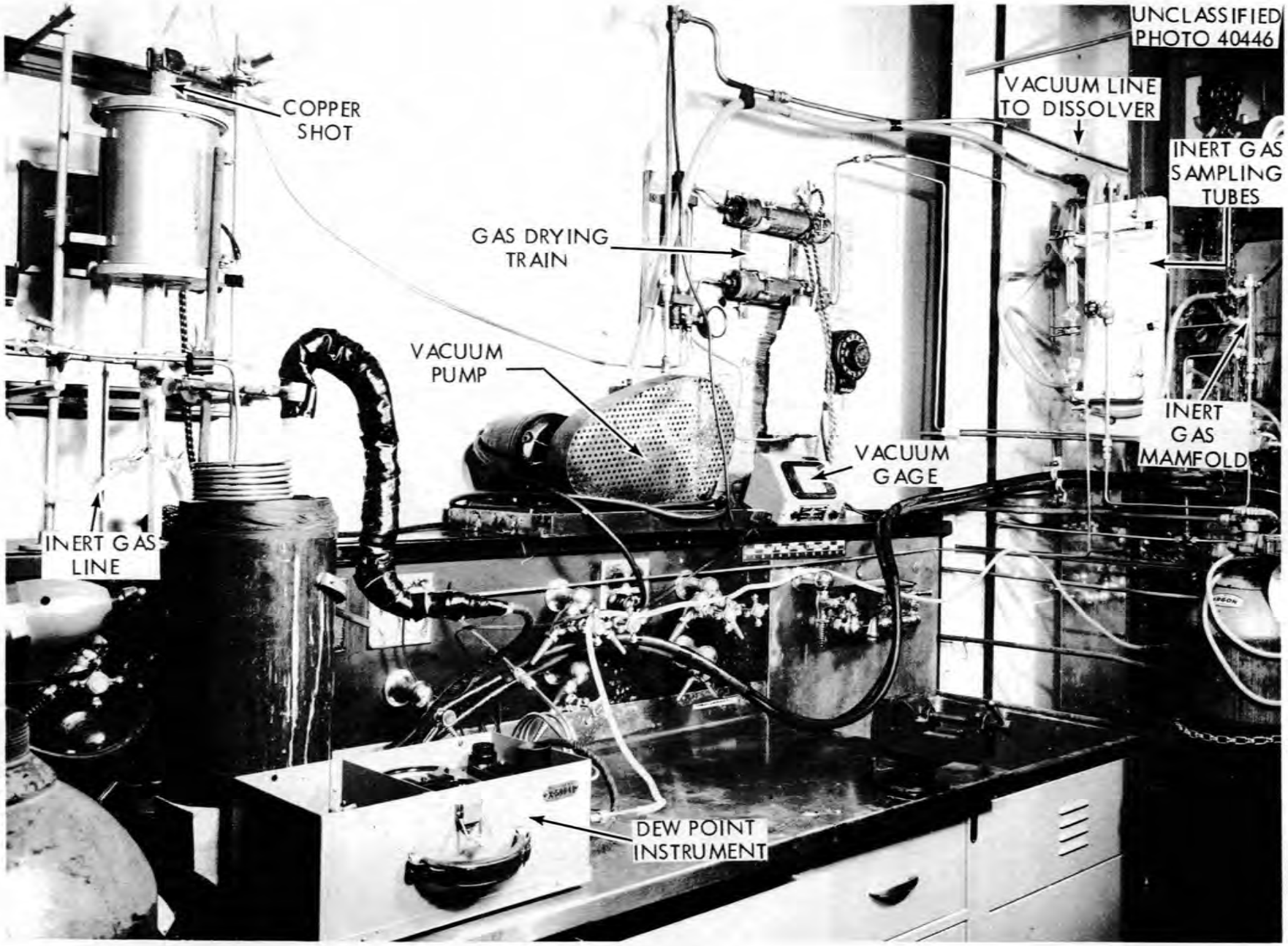

Fig. 8.1. Hermex Vacuum and Inert-Gas Purification Systems.

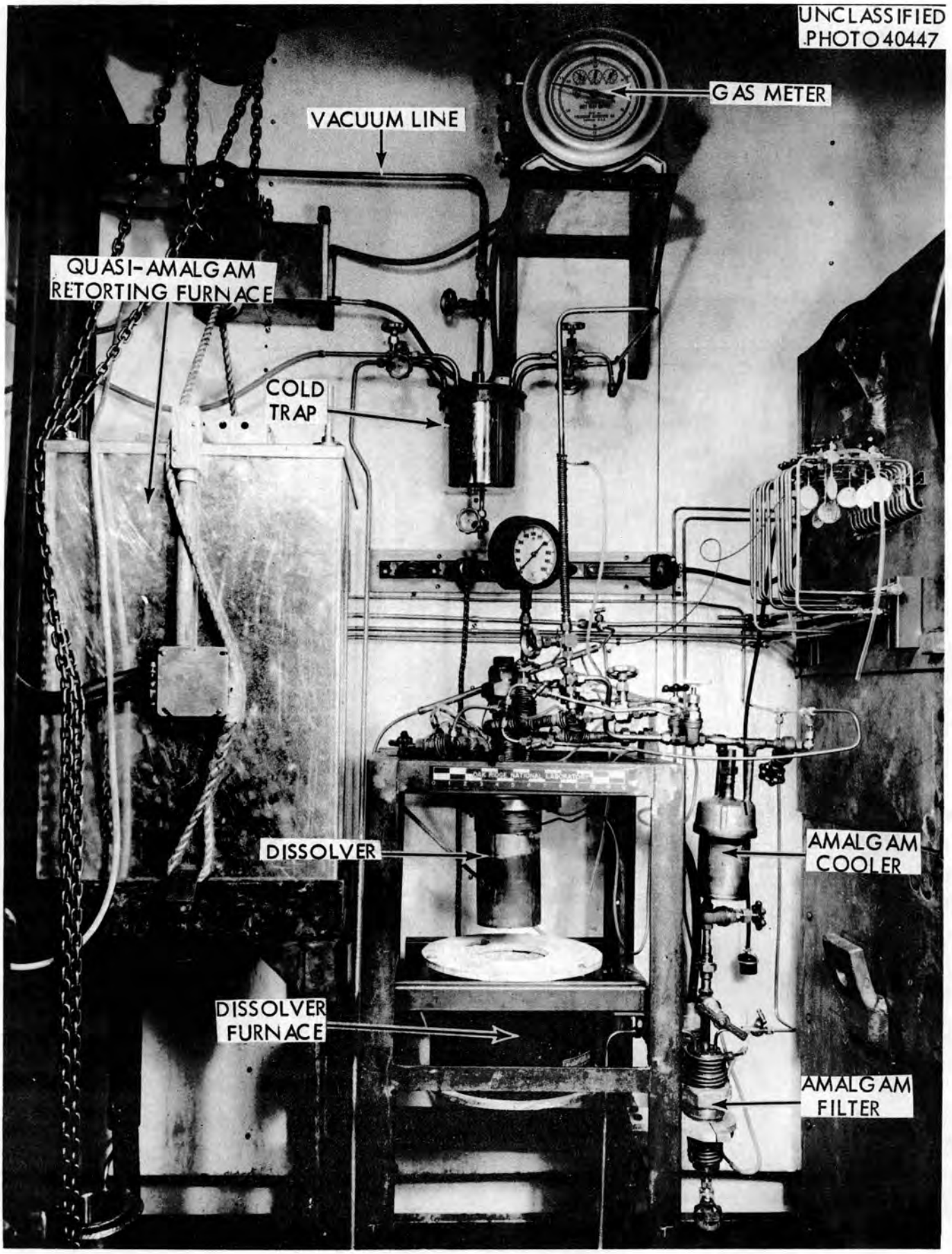

Fig. 8.2. Hermex Dissolver System and Retorting Furnace.

Waste salt transfer in run C-6 was deliberately interrupted several times in order to catch the waste salt in different containers. Following one of these interruptions, difficulty was encountered in restarting the transfer; a plug had formed at the waste salt outlet and had to be removed manually. No difficulties were encountered in transferring waste in run C-7.

Desorption was accomplished by heating to approximately 400°C with fluorine flowing at approximately 12 std. liters/min; the UF_6 desorbed was carried through the second absorber bed, which was heated simultaneously with the first, and into the cold traps. After desorption, approximately 0.2% of the uranium remained in the first absorber and approximately 0.5% remained in the second. Cold trapping losses were 0.03% or less.

The product was transferred in several steps. While the cold traps were still frozen, the entire product system was evacuated. The cold traps and product receiver were then heated above the triple point of UF_6. Liquid drain lines from the cold traps were opened, allowing liquid UF_6 to drain into the product receiver. After liquid transfer was complete, the product receiver was cooled to 0°C, thus effecting a thermal transfer of the remaining UF_6. From run C-6, 0.6% of the uranium was lost to chemical traps during product removal; 98.62% of the uranium was collected in the product cylinder. In run C-7 the pressure at the start of transfer was 35 psig; during transfer, pressure decreased to less than atmospheric. In run C-7, transfer proceeded satisfactorily until the pressure had fallen to 15 psig. At this time, a cast-brass fitting on a cold trap thermowell failed, releasing approximately 20% of the UF_6 to the atmosphere.

A summarized material balance for the two runs is as follows:

	Amount (%)	
	C-6	C-7
Feed	99.91	100.00
Nonrecoverable losses:	0.45	21.18
Waste	(0.45)	(0.01)
Leak		(21.01)
Other		(0.17)
Recoverable losses:	1.02	1.45
Absorption	(0.06)	(0.01)
Desorption	(0.33)	(0.26)
Cold trap	(0.03)	
Product transfer	(0.60)	(0.57)
Equipment holdup		(0.61)
Product transferred	98.53*	77.36**
Total	100.00*	100.00**

* Based on known losses.

**Based on feed because leak measurable only by difference.

Laboratory Process Development (G. I. Cathers, R. L. Jolley). Results of further studies indicated that the bulk of the activity transfer from the fluorinator with the product stream occurs during UF_6 volatilization (Fig. 8.3). More activity was transferred in fluorine sparging of uranium-free salt than in nitrogen sparging, but much less than in UF_6 volatilization. These results are perhaps consistent with the view that the fluorinating potential is highest during the period when U(V) or U(VI) is being formed in salt solution. Micrometallic filtration of the process gas stream effectively removed zirconium and niobium but not ruthenium. The vapor pressure of ZrF_4 over the fused salt appeared to be a major factor in the transfer of zirconium.

In the experiments the product gas passed from the fluorinator through four consecutive micrometallic filters to the UF_6 cold trap (Fig. 8.4). Two G-M counters permitted measurement of the trap. The test salt, approximately 7.7 mole % UF_4 in equimolecular $NaF-ZrF_4$, was fluorinated for 250 min. There was little activity transfer either before or after the UF_6 volatilization period. The inflection in the curve for the filter activity, if real, is indicative of a change in the kind of activity being transferred.

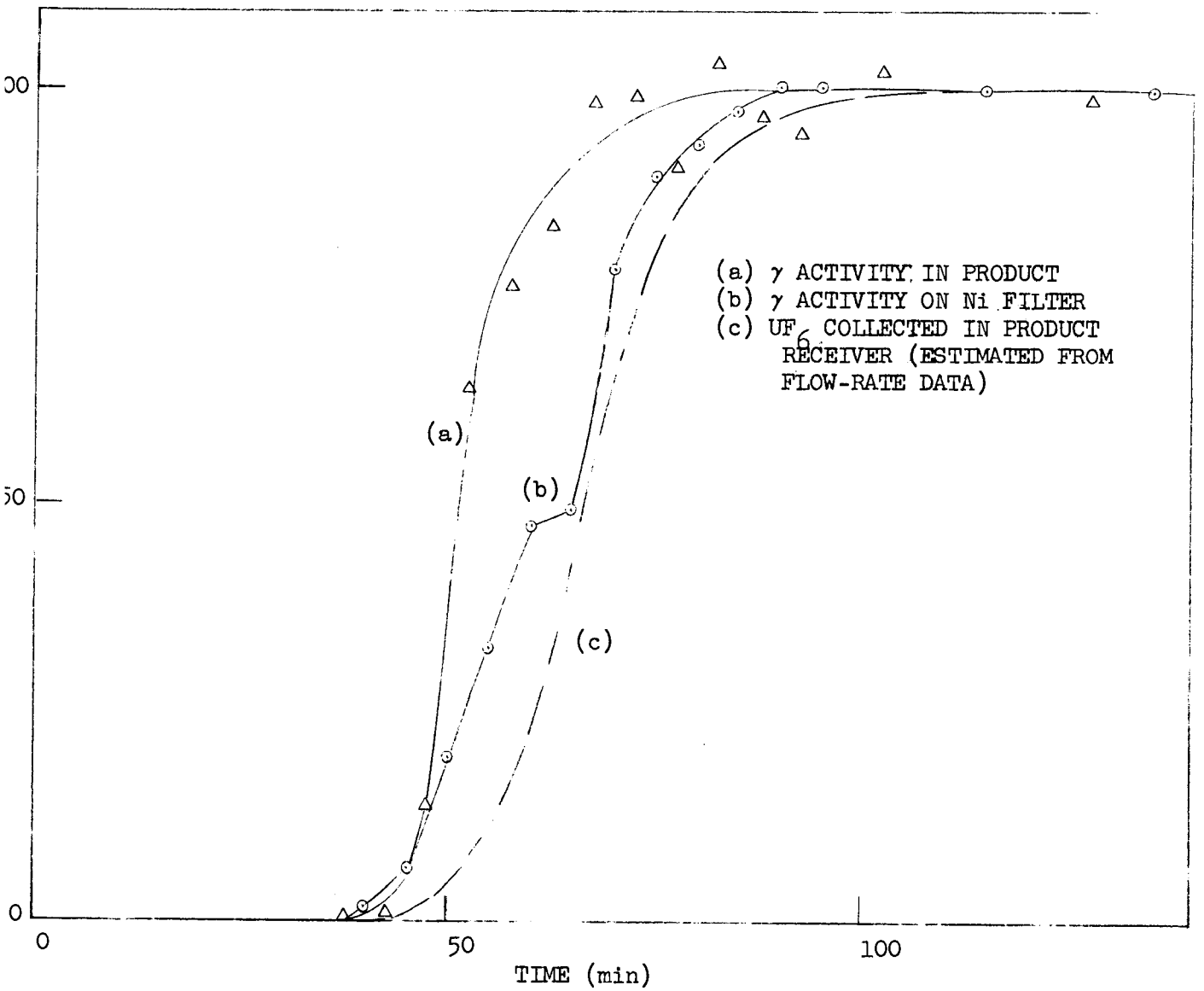

Fig. 8.3. Behavior of Gamma Activity in Fluoride Volatility Processing.

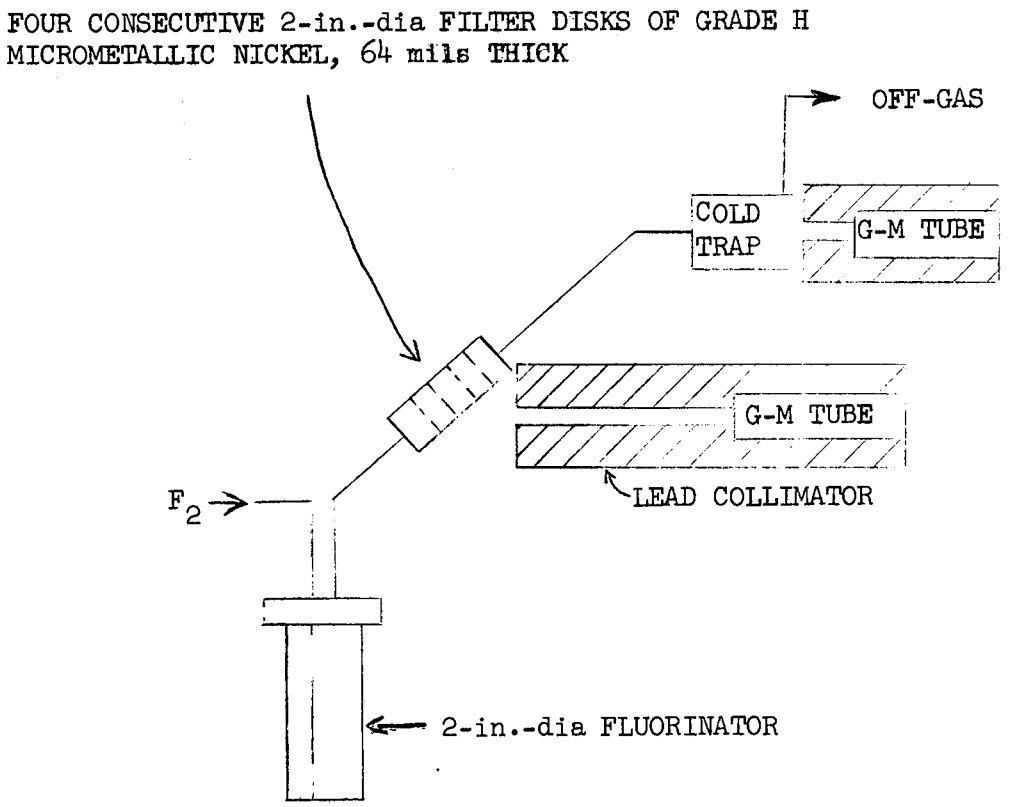

Fig. 8.4. Equipment Used in Activity Transfer Experiments.

Decontamination from zirconium-niobium activities with only a filter were comparable with that obtained by NaF absorption-desorption:

	Decontamination Factors		
	Previous Run, NaF Absorption	Filtration Test Run	
Activity	Method, Total	Total	Filter
Gross β	$3x10^6$	$2x10^4$	13
Gross γ	$1x10^6$	$5x10^3$	130
Ru γ	$4x10^3$	$3x10^2$	2.5
Zr γ	$1x10^7$	$1x10^7$	$1.6x10^4$
Nb γ	$5x10^5$	$4x10^6$	$4.9x10^4$
TRE β	$3x10^7$	$9x10^6$	470

There was little removal of ruthenium activity. The effective decontamination factors for the filter step were calculated from the amounts of activity found on the filter. The activity was removed from the filter with two 400-ml washes of 10% NaOH--10% Na tartrate--2.5% hydrogen peroxide, which reduced the contact radiation reading from 1.2 r/hr to about 1 mr/hr. Observation of each of the four elements separately with the collimated G-M tube before washing indicated that > 99 % of the activity was on the first element.

Nitrogen sparging of the salt used in the previous test, before fluorination and UF_6 volatilization, at nitrogen flow rates of 100 and 400 ml/min (STP) and temperatures of 550, 600, and 650°C, resulted in no noticeable transfer activity as determined with the collimated G-M tube. In a second series of nitrogen sparging tests under the same conditions with the same salt after the UF_6 volatilization, the activity transfer was determined by analyses of aqueous wash solutions and filter contact radiation readings. The activity transfer per unit volume of gas was approximately constant:

N_2 Flow Rate (ml/min,STP)	Entrained Activity on Filter (c/m/ml gas) Gross γ	Zr γ	Contact Radiation Reading of Filter (mr/hr)
100	1500	42	7
400	1600	59	21

Most of the gross gamma activity was probably niobium.

A ZrF_4 vapor pressure of 0.033 and 0.046 mm was calculated from the nitrogen sparging tests. This is less than the reported value of 0.09 mm for equimolecular $NaF-ZrF_4$ at 600°C.* These values perhaps signify that 40-50% of the ZrF_4 actually vaporized at 600°C is effectively entrained in the gas stream as snow after reduction of the temperature. There was apparently little entrainment other than true vaporization in the 600°C temperature zone.

A comparison of actvity transfer in fluorine and nitrogen sparging was obtained in the case of uranium-free salt by passing the gas through an aqueous trap of 2.4 M KOH. Nitrogen sparging resulted in a gross gamma activity transfer of 38 c/min per milliliter of gas, in contrast to 720 with fluorine. Although a gas filter was not used, the low activity transfer indicated some entrained solids separation before the aqueous trap.

Fused Salt Dissolution of Stainless Steel (J. E. Savolainen, L. M. Ferris). Further experiments on dissolution of stainless steel--containing fuel elements by reaction at 550-700°C with anhydrous HF in 53-47 mole % $NaF-ZrF_4$ confirmed the previously reported (April report, ORNL-2324) impracticability of the scheme. Extrapolation of recent solubility data** (Fig. 8.5) at 700°C for NiF_2

*BMI-1064, K. A. Sense, R. E. Bowman, R. W. Stone, M. J. Synder, and R. B. Filbert, Vapor Pressure of the $NaF-ZrF_4$ System and Derived Information.

**Analyses provided by Dr. L. G. Overholser of the ORNL Chemistry Division.

in 53-47 mole % $NaF-ZrF_4$ to intersect a 45° line extending from the origin gives a solubility value of approximately 0.35 wt % Ni^{++}. However, when FeF_2, CrF_2, and NiF_2 were added to $NaF-ZrF_4$ in proportions expected from the dissolution of 18-8 stainless steel, the NiF_2 solubility was only 0.10 wt %:

Wt % Added to Melt			Wt % Found in Filtrate		
Fe^{++}	Cr^{++}	Ni^{++}	Fe^{++}	Cr^{++}	Ni^{++}
9.0	2.2	0.98	6.95	1.85	0.33
4.5	1.1	0.50	3.60	0.73	0.19
1.1	0.28	0.12	1.25	0.22	0.10

From these data a solubility limit of about 1.5 wt % stainless steel in 53-47 mole % $NaF-ZrF_4$ is expected. For an APPR fuel element the uranium content would be approximately 0.1 wt %. This concentration is not excessively low, but in light of the extremely low rate of reaction, and the nonhomogeneity of attack by HF, dissolution of stainless steels in this fluoride medium appears impractical.

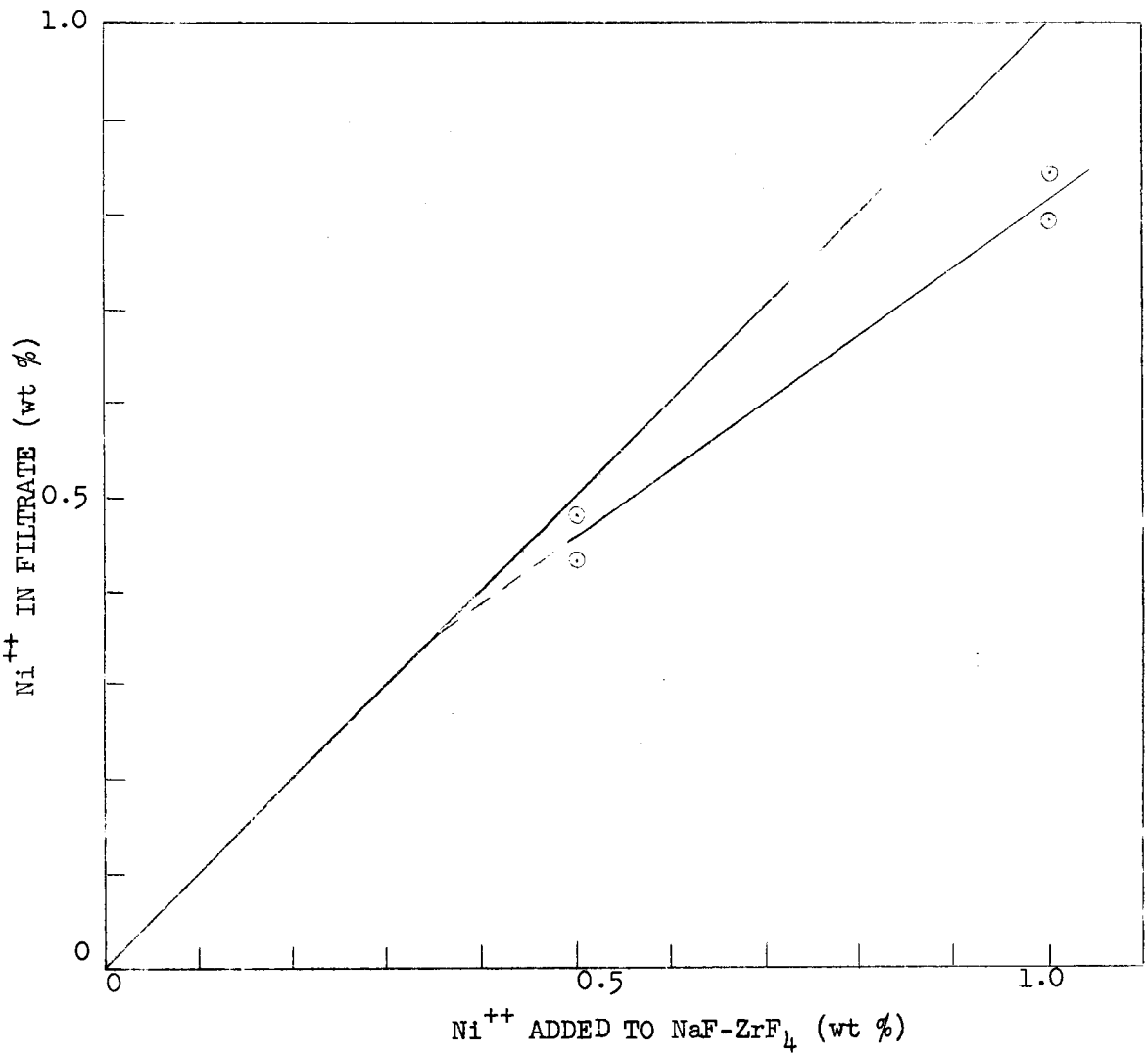

Fig. 8.5. Solubility at $700^{\circ}C$ of NiF_2 in Molten 53-47 mole % $NaF-ZrF_4$.

Part III. AQUEOUS HOMOGENEOUS REACTOR FUEL AND BLANKET PROCESSING AND DEVELOPMENT

9.0 HRT CHEMICAL PLANT

9.1 Plant Testing (W. D. Burch, W. L. Albrecht, N. C. Bradley, R. H. Winget)

Construction of the low-pressure system was completed.

Poor flange alignment and improperly machined gasket grooves in the Carpenter 20 valve bodies made initial sealing of six of these valve flanges impossible. Pitch diameters were from 5.5 to 9.5 mils over standard dimensions. After remachining and proper flange alignment, all six were sealed without difficulty. The completed system, exclusive of the dissolver, was then hydrostatically tested at 500 psi. The dissolver was not included in the hydrostatic test because of possible damage to the tantalum liner.

The dissolver top flange was again damaged during an attempt to seal the special Swagelok fittings when one of the tantalum liner tubes was twisted, resulting in a crack in the tube to flange-liner weld. Repairs to this crack were successfully made in the shops and the closure was sealed, leaktight, at 80 psi pressure. However, it was necessary to substitute lead ferrules in place of tantalum ferrules on two of the five tubes penetrating the flange. Lead has sufficient corrosion resistance, but its mechanical properties are inferior to tantalum for this application. Being quite soft, it seals readily, but tends to extrude and permit leakage.

The system was given the standard three-step flushing and cleaning procedure, consisting of a process-water flush to remove any foreign debris, a rinse with trisodium phosphate solution for degreasing, and a pretreatment with 5% HNO_3 at 85°C. This acid treatment would detect any off-grade material that might have been accidentally incorporated into the system. Analytical results showed no excessive amount of contaminants.

All low-pressure leak detector lines were filled with water, allowed to soak 24 hours, and the water drained and analyzed for chloride content. Two of the 42 lines showed minor contamination, the water from them containing 4.8 and 10 ppm chlorides, respectively.

Liquid-level instruments on the decay tanks and D_2O storage tank were calibrated. Over-ranging the instruments on the decay tanks, caused by failure of radiation block valves in each bubbler line to open simultaneously, resulted in a sizeable zero shift. An automatic equalization valve will be installed if this difficulty continues. The thermal-level probe on the D_2O storage tank has not functioned properly, but performance of the weigh cell is quite satisfactory.

Steam, water, and refrigerant services were placed in operation. Tests of individual radiation block valves in service lines showed all to be leak-tight.

A wooden model of the processing cell (Fig. 9.1) was fabricated to aid in operator training and serve as an exhibit for visitors later when the cell will be covered.

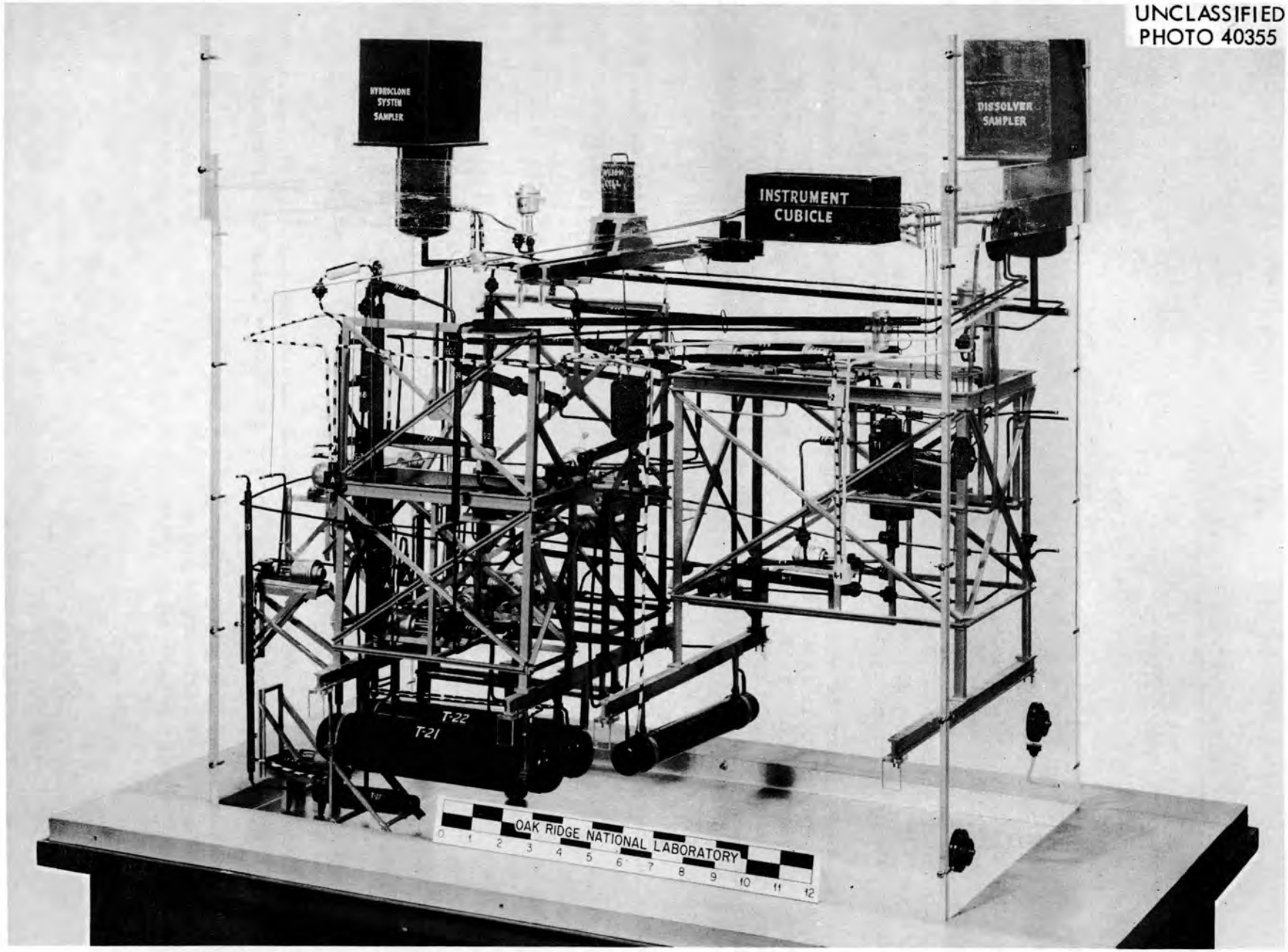

Fig. 9.1. HRT Chemical Plant Model.

9.2 Equipment and Process Modifications

Closed-cycle Cooling Water System (A. M. Rom). The cooling water system for the HRT-CP now comprises two closed cycles. Two cold traps are on a 40°F system, and the remaining process equipment is on a larger 90°F system. The Worthington pump for the larger system was received recently. Design work on this problem is about 80% complete.

Corrosion Product Dissolution Studies (P. A. Haas, J. W. Snider, V. L. Fowler). Results of eight test dissolutions showed that present equipment is inadequate for the proposed dissolution procedure. From 3 to 8% of the solids remained undissolved in plant-scale equipment, probably because of inadequate agitation by boilup during refluxing. In the smaller scale laboratory development tests, this was not a problem since boilup was limited to the flask bottom and the reflux rate in terms of dissolver volumes per hour was about ten times faster.

The steam jacket on the glass-lined HRT type dissolver is being segmented by an O-ring seal to limit the heating steam to the lower third of the jacket. This modification will limit the steam generation to the lower portion of the dissolver contents and thus ensure maximum agitation for a given boilup rate. The upper part of the steam jacket may be used for cooling with air or water.

A tantalum baffle installed below the vapor exit line did not reduce the corrosion of the Carpenter 20 reflux condenser system. The segmented steam jacket may reduce entrainment and thus reduce corrosion. Corrosion samples will be placed in the dissolver in future tests.

Data from the last four dissolution tests were:

Run	Position of Condenser	Reflux Composition for 10.8 M H_2SO_4 Reflux[a] U(g/liter)	H^+(N)	Undissolved Solids Wt. (g)	Composition (%) Zr	Fe	Cr
D-5	Horizontal	0.016	0.06	12.3	3.4	30.3	2.0
D-6	Horizontal	1.60	1.56	28.8	1.8	24.4	2.9
D-7	Vertical	2.85	0.32	33.2	0.6	24.5	1.1
D-8	Vertical	0.08	0.121	10.2	0.3	39.2	3.7

(a) For reflux cycle with highest concentrations of U and H^+ in the reflux.

Four hundred grams of zirconium, iron, and chromium oxides was used in each run. This was refluxed for three cycles, each cycle consisting of 4 hr with 10.8 M H_2SO_4 and 4 hr with 4 M H_2SO_4.

Inspection and Modification of Westinghouse A-13-A1 Pump (HR-CPP Prototype) (R. W. Horton, R. D. Arthur, R. C. Early, V. L. Fowler, F. N. McLain, D. A. McWhirter, G. E. Woodall). Inspection of the Westinghouse 1-gpm 100-ft-head pump (the prototype for the HR Chemical Processing Plant) revealed no wear (Fig. 9.2) after 3200 hr operation. About 2500 hr of this time was at 250 to 300°C, and 2900 hr was at 80 cycles/sec.

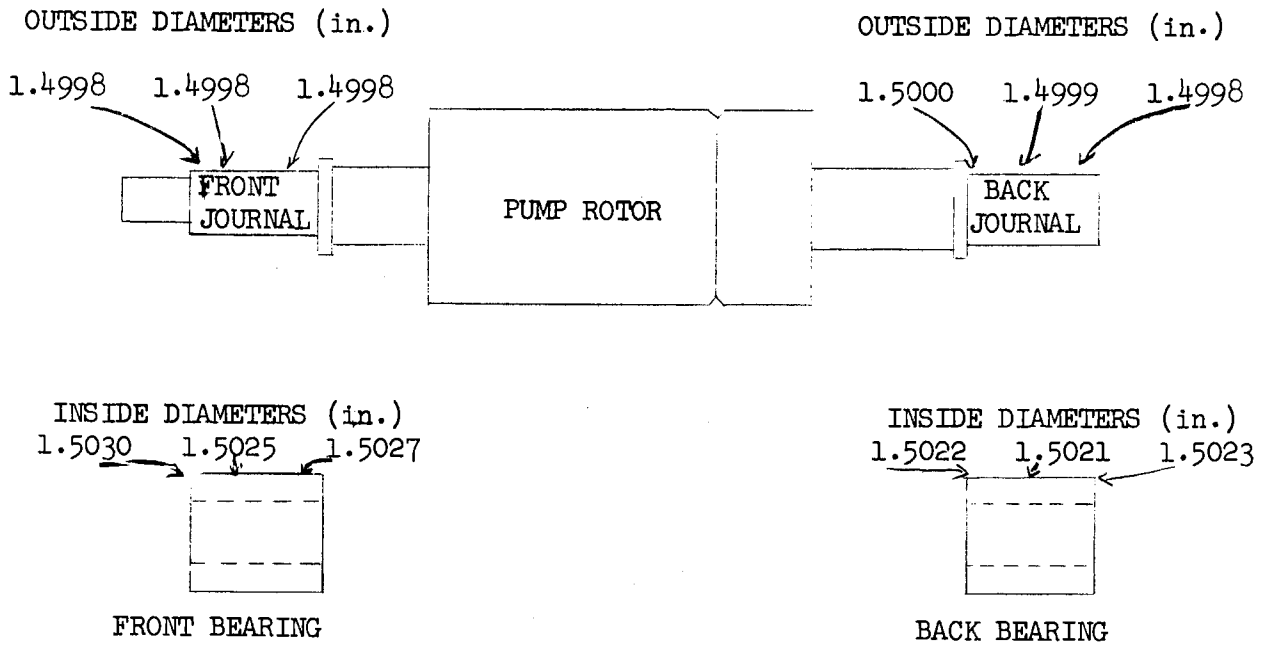

Fig. 9.2. Dimensions of Westinghouse A-13-A1 Pump Bearings and Journals after 3200 hr operation.

The inspection was made at this time because the pump was disassembled for the change to a welded thermal barrier. In the pump installed in the HR Chemical Processing Plant, liquid repeatedly leaked past the thermal barrier seal into the motor end of the pump, causing an increase in operating temperature at the front bearing which may result in bearing failure. The prototype pump operated in loop A had not leaked past the thermal barrier. However, it had not been exposed to the severe thermal shocks that occur in the Chemical Plant pump while going on stream with the reactor.

After inspection, the thermal barrier of the pump was heliarc-welded in place and the pump re-assembled for service testing. Over 100 hr at 300°C and 80 cycles/sec have been accumulated with no operating difficulty. Heliarc welding was chosen because the components involved in the weld are made from type 347 stainless steel.

The weld was prepared by V-grooving about 3/8 in., and the old metallic O-ring seal was used to position the thermal barrier. The thermal barrier cap screws were used to hold the thermal barrier in position while welding. A type 347 disk was welded over the head of each screw to prevent leakage past the threads.

After all welding was completed and tested (Dy-Chek), the gasket face was machined smooth. About 0.015 in. of metal was removed to clean the weld area. When the pump was reassembled with the gold-plated gasket previously used in place, a tight seal was obtained with the recommended 400 ft-lb torque on the flange bolts.

10.0 URANYL SULFATE FUEL PROCESSING

10.1 Rate of Deposition of Solids in a Dynamic System (Loop A) (R. W. Horton, R. D. Arthur, W. J. Bryan, R. C. Early, V. L. Fowler, F. N. McLain, D. A. McWhirter, G. E. Woodall).

Further runs were made in loop A to determine the rate at which typical homogeneous reactor corrosion product solids settle out from fuel solutions in a circulating system and to study the effect of temperature, concentration, and circulation velocity on the settling rate. The characteristics of the zirconium oxide solids used in these tests were described in the March monthly report (ORNL-2307).

Apparently, equilibrium concentration is approached over a period of about 10 hr (Fig. 10.1). The data indicate that the deposition rate has a first order dependence on the instantaneous concentration of the suspended material in excess of the equilibrium concentration over most of the run time; i.e., the concentration would follow an equation of the type $dc/dt = k(C-C_{\infty})_1$ where C_{∞} is the equilibrium concentration and C is the sample concentration at time t. A plot of log $(C - C_{\infty})$ against time shows the rate constant, k, to be larger during the first 60 min of any run. The effect of the independent variables cannot be presented quantitatively since the value of k is a sensitive function of the equilibrium concentration, which was not measured accurately. However, the trend of values of C at 600 min showed that C_{∞} did increase as the initial concentration of solids increased. The first sample actual concentration was always larger than calculated, possibly because of erosion of previously deposited solids. A glass loop is under construction with which to study the mechanism of solids deposition in a dynamic system.

10.2 Adsorption of Simulated HRT Corrosion Product Solids on Stainless Steel (W. B. Howerton)

Data obtained thus far show that appreciable amounts of solids are not deposited tightly on stainless steel surfaces from agitated slurries in contact with such surfaces. With type 304 stainless steel vessels, more solids were consistently taken out than were put in and the vessels lost weight correspondingly. With type 347 stainless steel there was no net change in either.

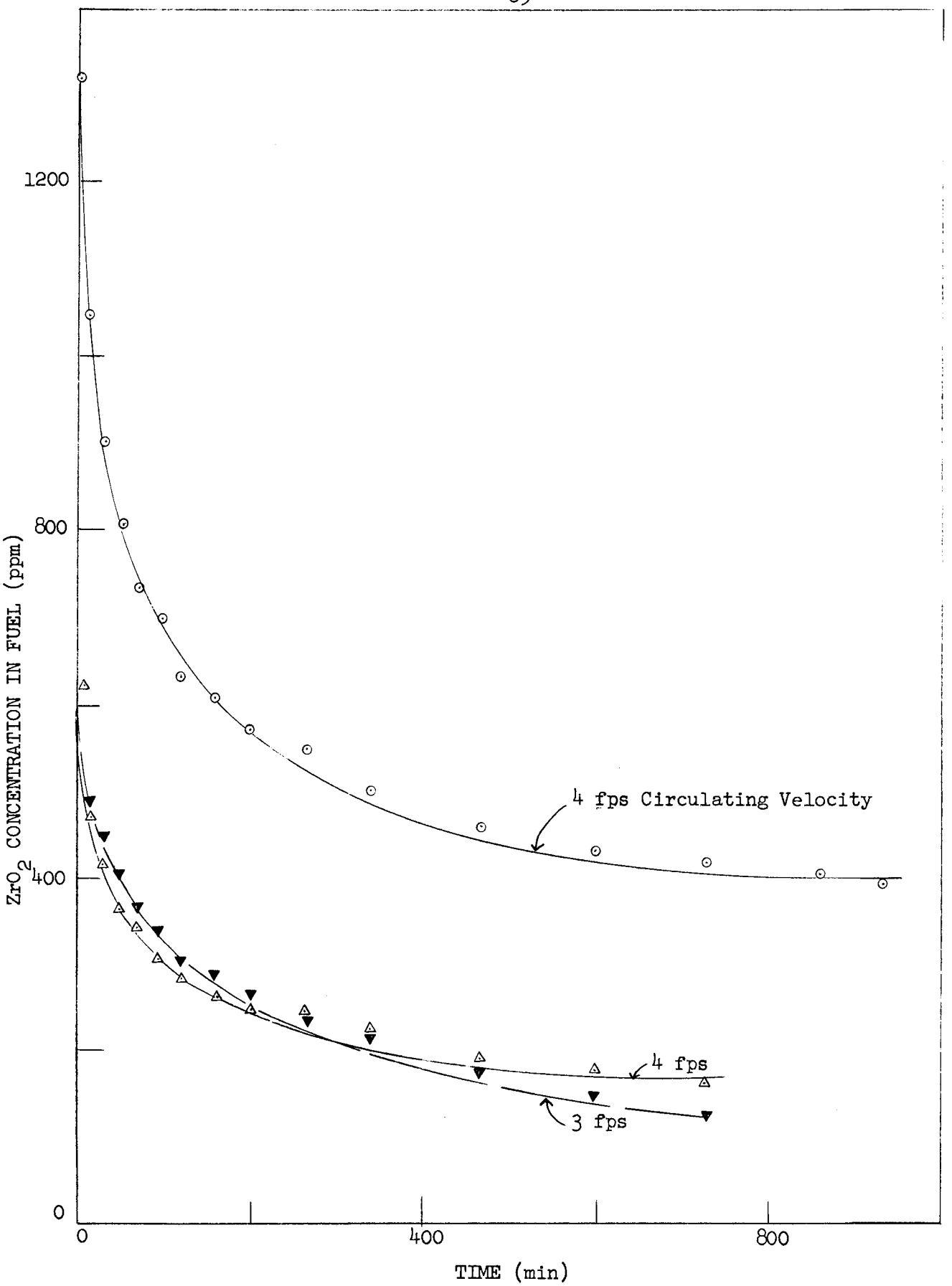

Fig. 10.1 Rate of Deposition at 115°C of ZrO_2 from Suspension in Circulating 0.04 m UO_2SO_4. Rates determined by gamma counting of radioactive ZrO_2 feed.

The experiments were made with uranyl sulfate solution, 5 or 10 g of uranium per liter, 25 or 50% excess sulfuric acid, with simulated reactor corrosion product solids ranging from 0.4 to 123 mg/ml. Two series of tests were made, one in type 304 stainless steel, the other in 347 stainless steel. The test vessels were made of 0.5-in. tubing closed with a welded-in plug at one end and a "Swagelok" cap at the other. The tube was charged with 10 ml of slurry and 0.5 ml of 30% H_2O_2, closed, and placed in an autoclave pressure vessel containing water and pressurized to 200 psig at room temperature with oxygen. The system was heated to 270-275°C for 33, 79, or 85 hr with the autoclave rocking during the heating time. After cooling, the test containers were opened and the solids flushed out of the tubes. The solids and tubes were then washed, dried, and weighed. After weighing was completed, a fresh charge of slurry and H_2O_2 was added to each tube and the test repeated.

10.3 Adsorption of Chloride by Simulated Reactor Solids (R. A. McNees, S. Peterson, J. E. Davidson)

Simulated HRT corrosion product solids (46% ZrO_2, 41% Fe_2O_3, 13% Cr_2O_3) removed a small amount of chloride from simulated fuel solution (0.04 m UO_2SO_4, 0.02 m H_2SO_4, 0.005 m $CuSO_4$) containing 117 ppm of HCl traced with Cl-36 when the two were heated together at 250 and 300°C. At a solids concentration of 20 g/liter the chloride concentration in the solution decreased 10-20% at both temperatures. Increasing the solids concentration increased the amount of chloride removed from solution, but increasing the heating time from 0.5 to 16 hr was without effect.

Material balances on all the experiments were low owing to difficulty in satisfactorily analyzing the solids for Cl-36. Direct counting of the β-emitting Cl-36 in the solids gave low results because of absorption. Digestion with 10.8 M H_2SO_4 followed by distillation also gave low results. An attempt to develop a satisfactory method of analysis is being made.

10.4 Dissolution of Simulated HRT Corrosion Product Solids in 10.8 M H_2SO_4 (R. A. McNees, W. B. Howerton)

Further tests of the dissolution of simulated corrosion product solids in 10.8 M H_2SO_4 confirmed again that the recommended dissolving procedure is successful if agitation is sufficient during all parts of the dissolving cycle. These tests were made because the larger equipment failed to produce good results (Sec. 9.2). Operation of a simulated HRT dissolver in a laboratory test showed that the HRT dissolving equipment would not provide sufficient agitation of the solids during dissolution and that some modification of the dissolver would be necessary.

Four tests were made in round-bottom boiling flasks heated by "glas-col" mantles. In two tests UO_2SO_4—free solids were used and in the other two the solids were evaporated in a slurry of UO_2SO_4 solution such that the final solids were approximately 50% corrosion product solids and 50% UO_2SO_4. One flask of each set was provided with mechanical agitation while the others were agitated only by boiling. The boil-off rate was 2% of the dissolver contents per minute. In all four tests 99.7% of the solids was dissolved in one cycle.

In a fifth test UO_2SO_4-containing solids were treated in a cylindrical flask heated from the sides only by a heating tape. The boil-off rate was 0.5% of the dissolver contents per minute. Only 60% of the solids was dissolved in one cycle.

These results indicate that the HRT dissolving equipment should be modified to provide for heating from the bottom of the dissolver so that more vigorous boiling may provide better agitation of the solids during all portions of the dissolving cycle.

10.5 Iodine Chemistry (R. A. McNees, S. Peterson)

At 100°C in the presence of Co-60 radiation the stability of iodate in simulated homogeneous reactor fuel solution was decreased by increasing the amount of free sulfuric acid present in the solution. The results of experiments performed at higher acidities (0.02 m vs 0.01 m H_2SO_4) than reported in previous monthly reports are shown in Fig. 10.2 for four H_2/O_2 ratios in the gas phase above the solutions. The effect of increasing the free sulfuric acid in a 0.04 m UO_2SO_4 solution by a factor of 2 is to decrease the iodate concentration by a factor of 0.5. The steady-state iodine valence distribution as a function of H_2/O_2 ratio in the gas phase above the solution is shown in Fig. 10.3 along with similar data previously reported. The data clearly indicate that at the higher (0.02 m) acidity the effect of variation in the gas composition on valence distribution is not so pronounced as at the lower (0.01 m) acidity.

10.6 Behavior of Iodine in the HRT Mock-up (R. A. McNees, S. Peterson)

Iodine introduced into the high-pressure system of the HRT mock-up was rapidly removed from that system in the let-down stream and concentrated in the low-pressure system. In the low-pressure system iodine was adsorbed by the operating platinum recombiner catalyst, impairing its efficiency.

In the mock-up 60 liters of uranyl sulfate solution (0.04 m, 0.02 m in H_2SO_4) circulated at 280°C in a high-pressure loop with a constant side stream cooled and let down to a dump tank, from which a constant stream was pumped back to the high-pressure system. Hydrogen and oxygen admitted to the low-pressure system were diluted with steam generated in the dump tank and passed through a recombiner (bed of platinized alundum) to a condenser. (In the second experiment, a bed of silvered alundum preceded the recombiner.) The condensed steam from the recombiner was collected in a tank, from which constant small streams were fed to the pump and to the pressurizer of the high-pressure system; the remainder of the condensate eventually reached the dump tank.

In the first experiment, half the iodine (0.70 g) was added on each of two successive days. After each addition, the iodine concentration in the high-pressure system dropped by a factor of 50 in 4 hr. Iodine vaporized in the low-pressure system and was adsorbed in the recombiner. After dismantling of the recombiner, the catalyst bed was sampled, assayed for I-131, and found to contain 87% of the iodine that could have entered the system. Several hours after iodine injection, practically none was evident elsewhere in the system

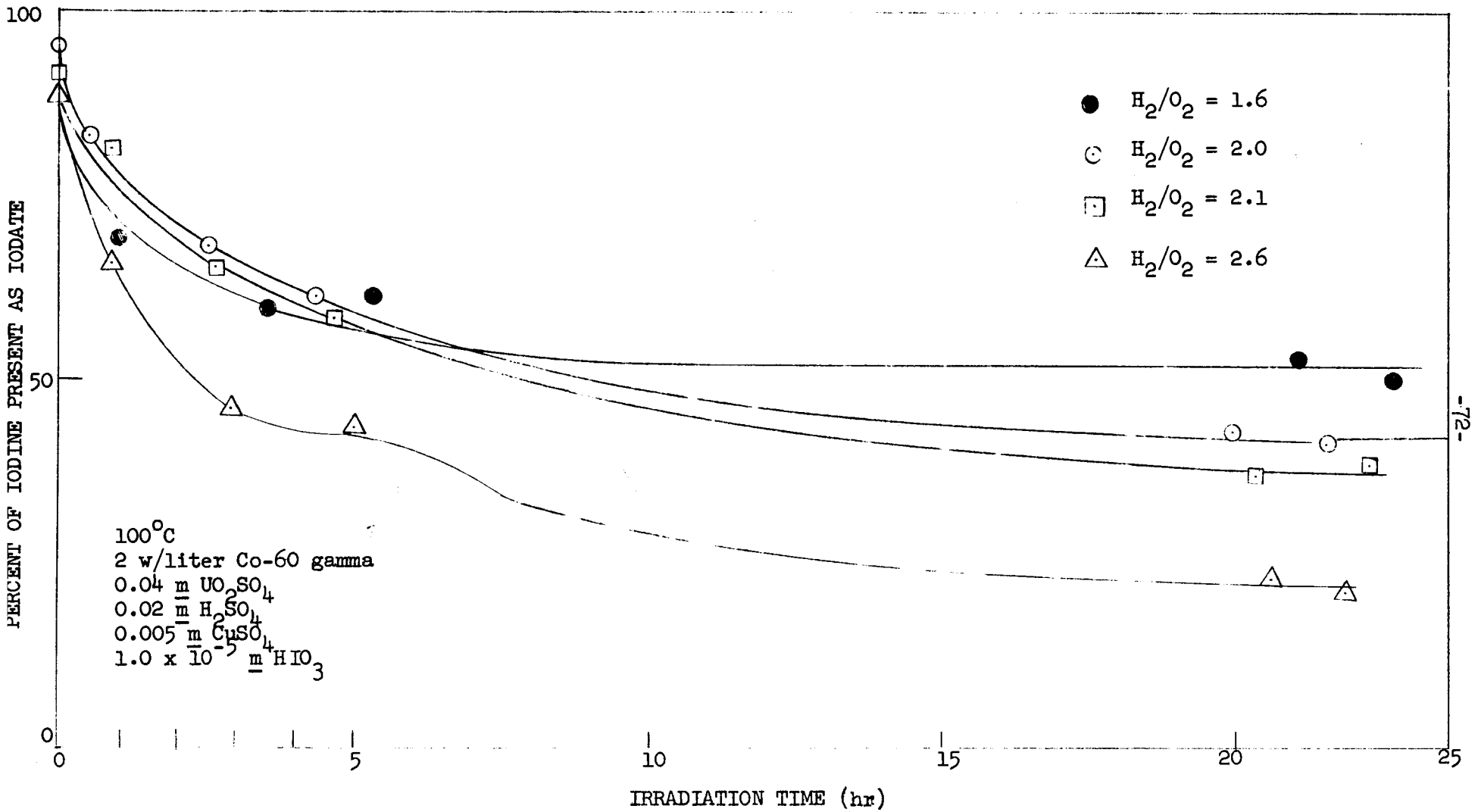

Fig. 10.2. Irradiation of Simulated HRT Fuel at Various H_2/O_2 Ratios.

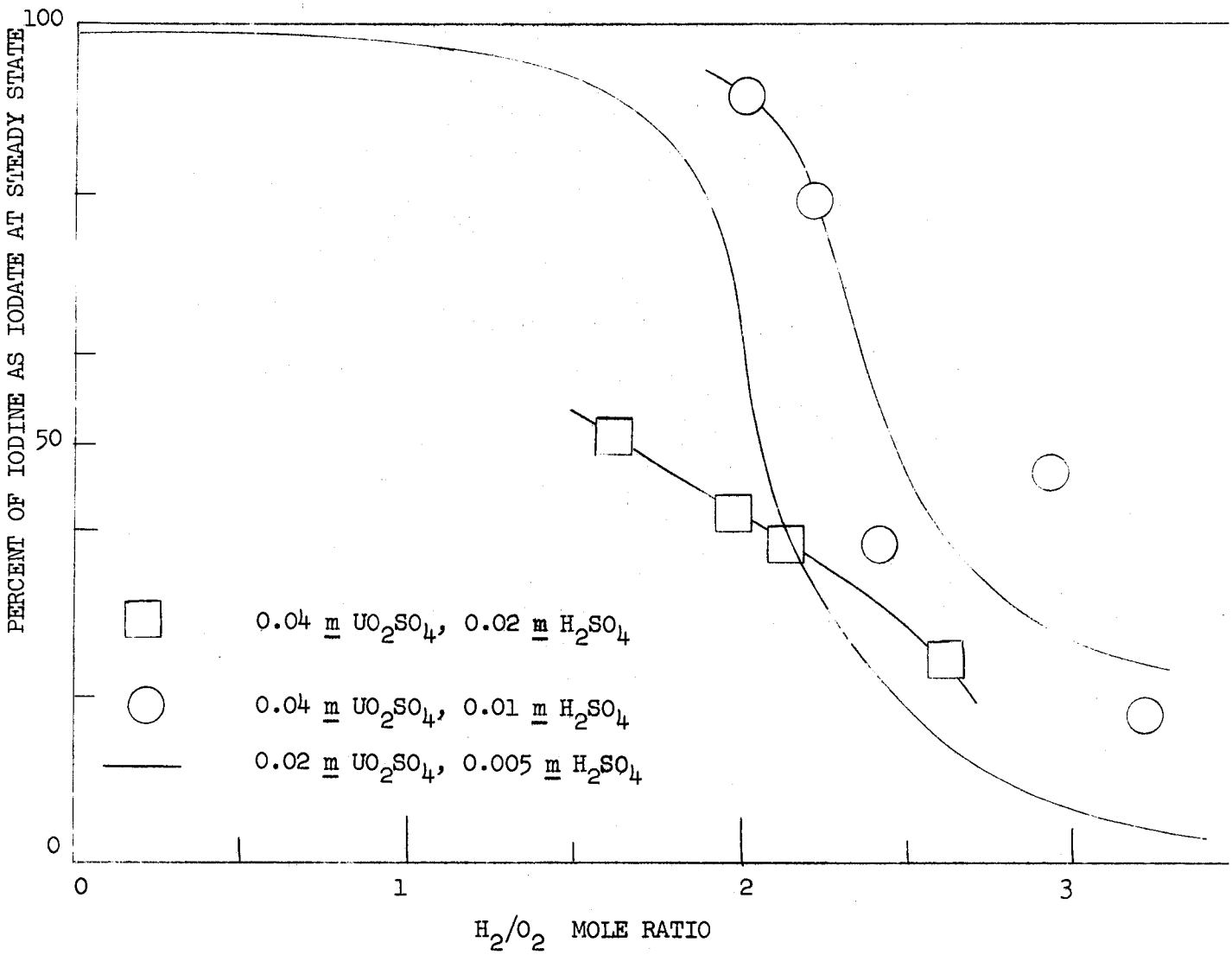

Fig. 10.3 Steady-state Iodate Content For Three Fuel Solutions at 100°C and 2 w/liter.

liquids or in gases leaving the system. An accurate assay of iodine entering the system was impossible, since incomplete loading into the addition bomb and incomplete transfer from the bomb into the system are suspected to have occurred. Some sample contamination indicated that the latter of these happened in the second iodine addition of the first experiment.

After the first experiment, the recombiner was loaded with fresh catalyst, a silvered alundum bed was installed ahead of the platinum catalyst bed, and provision was made for sampling both beds without dismantling the system.

In the second experiment, the entire amount of iodine was added by diverting a portion of the high-pressure flow through the addition bomb for 0.5 hr. Midway during the period a sample of the let-down stream showed an iodine concentration which, if representative of the high-pressure solution, indicates that 62% of the iodine added to the system was in the high-pressure system and that iodine was already present in the dump tank. Immediately after removal of the additon bomb, samples of the high-pressure solution and the let-down solution showed that 27% and 26%, respectively, of the added iodine was in the high-pressure system. These concentrations dropped by a factor of 10 in 2 hr and 100 in 6 hr. During this time, iodine was observed, by using a survey meter, to be accumulating both in the silvered alundum and in the recombiner, and the efficiency of the latter was decreasing. Operating the loop overnight without the recombiner operating (no hydrogen fed into the system) restored some of the iodine to the solutions. Calculations show that practically all the iodine present in the high-pressure system after the first 2 hr had re-entered that system from the condensate tank via the pressurizer.

After about 24 hr of operation, the loop was shut down and a sample of pellets taken from both the silver and platinum beds. After resuming operation, the recombiner was operated at 650°C instead of the previous temperature of 420°C by decreasing the steam content of the gases entering it. After two days of operation at 650°C both beds were again sampled. Assuming that the samples taken were representative, the iodine contents were, in the first sampling, silver bed 14% and recombiner 17% and in the second sampling, silver bed 32% and recombiner 2.3%, based on the theoretical amount of iodine entering the system. No appreciable iodine was elsewhere in the system. Transfer of iodine from the platinum bed to the silver bed restored the recombiner to normal efficiency.

These data show that the recombination efficiency of the platinum catalyst will be reduced if iodine is allowed to build up in the recombiner as a result of its operation at low temperatures, and suggest that such difficulties may be overcome by operating the catalyst bed at 650°C. The benefits due to the presence of the silver bed ahead of the recombiner should be evaluated.

10.7 Adsorption of Fission Gases by Activated Charcoal (R. E. Adams, W. E. Browning, J. F. Krause, D. E. Guss)*

Adsorption. Data obtained in a preliminary study of adsorption of krypton on activated charcoal at temperatures ranging from room temperature to 100°C

* Solid State Division.

indicated that the adsorptive capacity of charcoal at elevated temperatures for krypton diluted with oxygen is significantly less than would be predicted by extrapolation of lower temperature data. The adequacy of the HRT charcoal beds is therefore doubtful. A deleterious effect of water on the adsorptive capacity of charcoal was also observed.

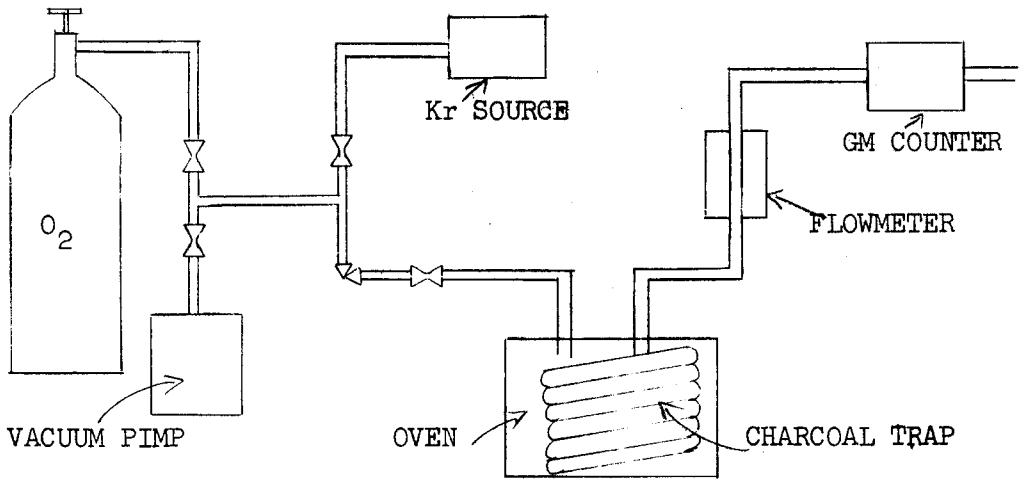

Fig. 10.4. Equipment Used in Krypton-Adsorption Studies.

The data were obtained with a charcoal trap (Fig. 10.4) fabricated of 24 ft of 3/4-in.-o.d. copper tubing wound in a helix and filled with 782 g of Columbia grade G activated charcoal, 8-14 mesh. The trap was enclosed in a small drying oven for study at temperatures up to 100°C. Neither the trap nor the manner of heating was entirely adequate. Charcoal traps fabricated from straight pipe will be used in future work. The use of a steam jacket for heating the straight traps is being studied, with the first results encouraging.

For each run the charcoal trap was saturated with oxygen and was brought to the desired temperature. Thermocouples were buried in the charcoal trap at the inlet and outlet ends and spaced along the outer surfaces of the copper tubing. After temperature equilibrium was reached, the manifold was evacuated and Kr-85 allowed to flow into the krypton chamber. The chamber was closed off and the remainder of the manifold evacuated. Oxygen was then allowed to push the krypton into the trap at a constant flow rate of 250 cc/min. The concentration of krypton in the effluent gas, and therefore its partial pressure, was determined by measuring the activity of Kr-85 in the gas. The activity of the effluent gas was measured as it passed through a small gas cell, one wall of which was the end window of a TGC2 Geiger tube. The activity was registered on a log-count rate recorder. The results of studies at 26, 50, 75, and 100°C are shown in Fig. 10.5.

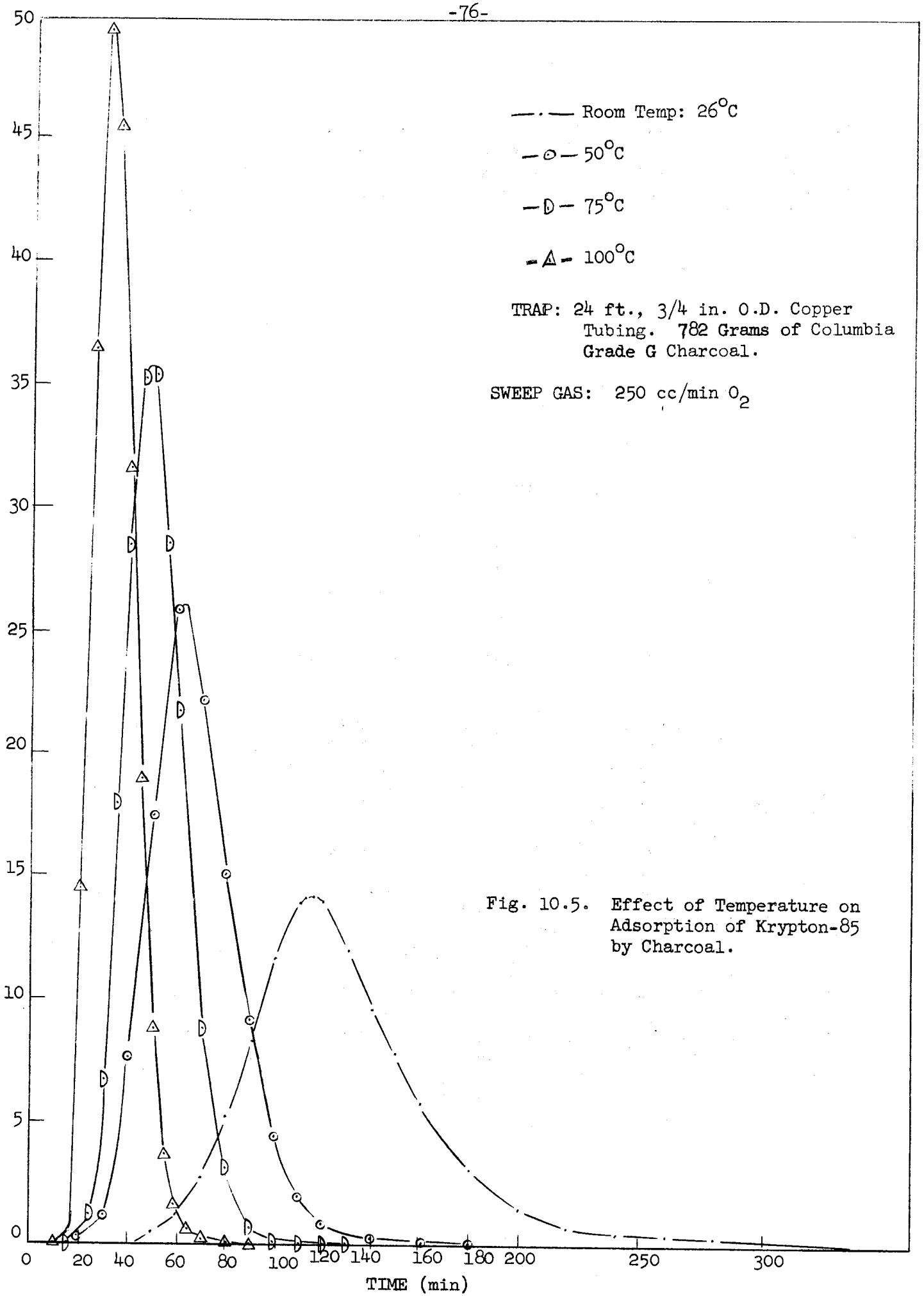

Fig. 10.5. Effect of Temperature on Adsorption of Krypton-85 by Charcoal.

During the higher temperature runs moisture was driven from the charcoal. After the 100°C run, the trap was dried by heating at 100°C and flowing oxygen through it for 18 hr. With this dry trap at room temperature, time for the activity to break through the trap and time to reach maximum activity (t_{max}) were displaced (Fig. 10.6).

N values for the temperatures studied, where N is defined as the number of theoretical plates in the trap, were:

Temp. (°C)	N Value
24-27	18.3
50 ± 9	15.0
75 ± 12	14.5
100 ± 18	12.8

These N values were much lower than anticipated based on N values reported in ORNL-2116*, but with these values agreement between the theoretical and experimental data is close.

Using the above N values, the theoretical values for the activity in the effluent gas were calculated from the expressions

$$\frac{NF}{km} = \frac{N - 1}{t_{max}} \quad \text{and} \quad \log \frac{y}{c} = -\frac{NFt}{km} \log e + (N-1) \log t$$

Where

F = flow rate (cc/min)

k = slope of the linear isotherm x/m = kP for radiokrypton in the mixture of inert purge gas and radiokrypton (cc atm/g atm), x being the amount of radiokrypton adsorbed isothermally (g atm) and P being the partial pressure

m = amount of charcoal in trap (g)

t = time after injection of pulse (min)

Holdup Time and Activity. Previous calculations of holdup time and activity for the HRT charcoal beds were made with the consideration that a pulse of activity is held up until and released at a breakthrough time, t_{max}. This assumption is valid only if the number of theoretical plates in the system is very large. For a small number of plates some of the activity gets through the bed earlier than the time t_{max}. Equation (1) in ORNL-2116 adjusted to take into account continuous input and decay is:

$$P_N = \frac{AN^N F^N}{(N-1)!(km)^N} \int_0^\infty t^{(N-1)} e^{-(C + \lambda)t} dt$$

where $C = \frac{NF}{km}$ and λ = radiodecay constant. The "decay factor," that is, the ratio of activities with and without holdup in the charcoal bed, is

$$\frac{P_N}{A} = -\frac{N^N F^N}{(N-1)!(km)^N} \int_0^\infty t^{(N-1)} e^{-(C + \lambda)t} dt = \left(\frac{NF}{NF + \frac{0.693\ km}{t_{1/2}}} \right)^N$$

* A more detailed explanation of N and of charcoal trap theory is given in ORNL-2116, "Measurement and Analysis of the Holdup of Gas Mistures by Charcoal Adsorption Traps," by W. E. Browning and C. C. Bolta.

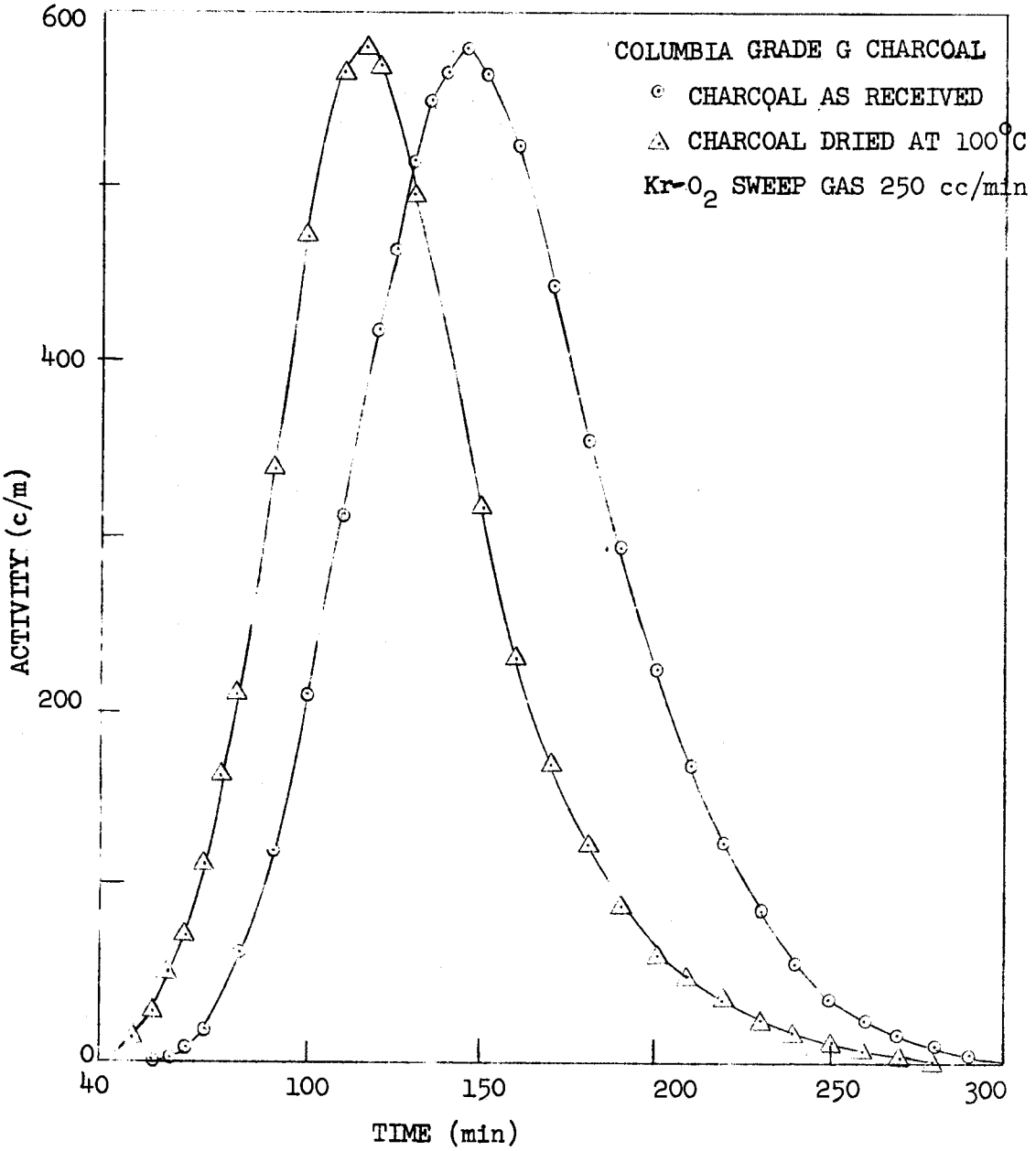

Fig. 10.6. Effect of Moisture on Krypton Adsorption by Charcoal at Room Temperature.

Two illustrations of the effect of the size of N on the ratio P_N/A were calculated. In one an N of 30 was selected and in the other an N of 1300, which for the values chosen for F, km, and the half-life of Xe-133 is a very large number of theoretical chambers (since the value of the ratio P_N/A for an N of 1300 is very near the value of $e^{-t_{max}}$). In each case, F = 250 cc/min, $t_{1/2}$ for Xe-133 = 5.27 d, M = 410 lb, t_{max} for Xe-133 = 68 d, and km = 2.45×10^7 cc. (The value of km for xenon is derived from km for krypton, using the ratio obtained in static tests.) Then for N = 30, $P_N/A = 3.98 \times 10^{-4}$, and for N = 1300, $P_N/A = 1.38 \times 10^{-4}$.

From these two examples it can be seen that different adsorption beds with the same average holdup times could produce widely differing "decay factors," depending on the amount of activity that would break through before the average time. In the case of the HRT charcoal beds, the amount of activity actually leaving the beds would be three times larger than that calculated if the calculation was based on the assumption that the activity left the bed at t_{max}.

11.0 URANYL SULFATE BLANKET PROCESSING

11.1 Loop P-1 Studies (P. A. Haas, S. D. Clinton)

Ten runs were made in loop P-1 for a cumulative operating time of approximately 190 hr, all with an oxygen overpressure of 50 psi. There was no apparent damage to the A-150-D Westinghouse pump bearing assembly. In one 46-hr run with 5 wt % HNO_3 at 85°C or lower, all corrosion occurred during the first 2 hr of operation, in which 5 g of iron and 1 g of nickel were dissolved. Five thermal cycles were made with water at loop temperatures of 220-240°C and a total operating time of 60 hr; these were followed by four runs with uranyl sulfate solution (10 g U/kg H_2O) at loop temperatures of 220-230°C. Samples taken during the uranyl sulfate runs indicated that the uranium remained in solution, none being adsorbed on the loop surfaces. No corrosion was apparent during these runs; the nickel content of the solution remained below 20 ppm. At the end of the last run examination of the sample holder showed that the cylindrical shoulder of the retainer plug had galled with the coupon holder body, and the silicone rubber O-ring had dissolved in the uranyl sulfate. Approximately 5 mils was machined from the cylindrical plug surface, and the rubber gasket was replaced with Teflon.

The biggest problems encountered during thermal cycling were leakage around autoclave valve glands and fittings upon cooling the loop after a run. After cleaning, relubricating, and tightening the pump scroll case bolts to a torque of 300 ft-lb, the gold-plated stainless steel gasket between the pump housing and scroll continues to hold 1000 psi of nitrogen after five thermal cycles with no apparent drop in bolt loading.

11.2 In-pile Bomb Experiments (R. E. Leuze, S. S. Kirslis, R. L. Hickey)

In a second* experiment on the behavior of plutonium and neptunium in uranyl sulfate under irradiation in the LITR, there was a very small amount of precipitate containing only traces of neptunium and plutonium. Most of the plutonium was adsorbed on the titanium bomb walls, leaving 16% in solution at a concentration of 14 mg/kg H_2O. Most of the neptunium was in solution at a concentration of 37 mg/kg H_2O with only 4% on the bomb walls:

	Plutonium		Neptunium	
Location	μg	% of Total	μg	% of Total
Solution	57.8	16	139.2	95
Precipitate	0.7	0.2	1.3	1
Bomb walls	305.6	84	5.8	4
	364.1		146.3	

These results are in contrast with the first experiment in which both the neptunium and plutonium were distributed about equally between the solution and the bomb walls. The experiments were made with 4 ml of 1.4 m UO_2SO_4 containing 0.002 m Cu^{++} which was irradiated in a titanium bomb at 250°C under 200 psi O_2 at a flux of 2.7×10^{13} n/cm^2/sec for 12.8 days.

Plutonium valence analyses were made for both runs within 10 hr of reactor shutdown; however, the results are not reliable owing to peroxide formation after the solutions were cooled to room temperature prior to analysis. These analyses indicate that the plutonium in solution was $<1\%$ Pu(IV) in the first run and $>90\%$ Pu(IV) in the second run. Results of the first run may be in error, since it was a single determination and analysis of the second run was made in triplicate.

Agreement was excellent between the quantities of neptunium found in the first and second runs: 143 μg for 10.9 days' irradiation , and 146 μg for 12.8 days' irradiation, respectively. Both values indicate a neutron absorption cross-section of approximately 13 barns for U-238 in 1.4 M aqueous solution. In both runs, however, the total quantity of plutonium formed was low by 100 μg or more. (The Pu/Np ratio may be calculated, and is independent of U-238 cross-section.) This may be due to incomplete bomb descaling or to error in either the neptunium or plutonium analysis.

12.0 THORIUM OXIDE SLURRIES

12.1 Preparation (P. A. Haas, W. J. Clossey)

The basic process for preparation of thorium oxide is precipitation of thorium oxalate by addition of oxalic acid to a thorium nitrate solution, and subsequent firing to the oxide. Since optimum slurry characteristics seem to depend on uniformity of ThO_2 particle size, with sizes in the 0.2 to 10 μ range desired, it will be necessary to investigate both the precipitation control and the means of liquid-solid separation. Control of particle size is dependent on solution temperature, length of time of contact, and other factors controllable by equipment design and operation.

* The first was reported in the HRP quarterly for April 1957, ORNL-2331.

Precipitation of Thorium Oxalate. Designs were completed for a jet precipitator for thorium oxalate production. The precipitator consists of a pair of opposed fine jets entering the run of an ordinary tee. Product is led off through the branch to a liquid-solid separator. The results of preliminary runs on a small-scale model of this device indicate that by this method good control can be obtained of temperature of reactants and product over a wide range and that delay times after precipitation can be varied from a few seconds to as long as desired by changes in product hold-up volume.

Filtration. In a series of studies to determine the feasibility of liquid-solid separation by continuous filtration, vacuum filtration through nylon filter cloth gave filtrate removal rates as high as 8 gal/ft^2/hr at a vacuum of 40 cm Hg. Product losses ranged downward from 0.2%.

There was a correlation between mixing rate, as measured by the pressure drop across the solution introduction jets, and particle size distribution. In the preliminary runs, the distribution of particle sizes was displaced toward the lower sizes as the mixing rate increased. The curve of size distribution from the first three runs made (Fig. 12.1) at several mixing rates are fairly typical. Particles were smallest with the intermediate mixing rate, in which there was no excess oxalic acid, but the high rate gave a somewhat narrower band. For a given size, a narrower size range would give fewer fines which might interfere with solids recovery in a production set-up.

12.2 Development (J. P. McBride)

Irradiation Studies (N. A. Krohn). Irradiation of a settled slurry of 800°C calcined micropulverized thorium oxide was continued. The experiment has now been in the reactor for 1324 hr, 1100 at full power. This corresponds to an integrated dose of 1.15×10^{20} nvt.

Viscosity Measurements (N. A. Krohn). Out-of-pile measurements of slurry viscosity were made in the dash-pot bomb on slurries of thorium-uranium oxide (U/Th = 0.005) prepared from the coprecipitated oxalates by calcination at temperatures from 650 to 1600°C. At concentrations of 250 and 500 g Th/kg H_2O the viscosity was essentially independent of both calcination temperature and slurry temperature (Table 12.1). Upon increasing the concentration to 750 g Th/kg H_2O, however, the apparent viscosity increased markedly with slurry temperature, the relative effect becoming less as the calcination temperature was increased. Only in the case of the 1600°C fired material was it possible to stir a slurry containing 1000 g Th/kg H_2O.

Gas Recombination Studies (L. E. Morse). Measurement of the reaction rates of stoichiometric H_2-O_2 mixtures in an aqueous slurry of thorium-uranium oxide (500 g Th/kg H_2O, U/Th = 0.005) obtained from 10°C coprecipitated thorium-uranium oxalates by calcination at 1000°C for 24 hr and containing 0.05 m molybdenum trioxide have been completed. In both the slurry as prepared and the activated slurry, reaction rates were more than sufficient for the use of the slurry in a TBR blanket:

Slurry Treatment	Specific Reaction Rate Constant (hr^{-1})	Combination Rate, 250°C and P_{H_2} = 500 psi (moles H_2/hr.liter)
As prepared	$k_\pi = 2.38 \times 10^7 e^{-6.38 \times 10^3/T}$ (224-248°C)	59
After activation	$k_\pi = 1.68 \times 10^3 e^{-1570/T}$ (206-238°C) (T = absolute temperature)	41

The apparent activation energy of the combination reaction in the activated slurry was 3140 cal/mole, which indicated that the rate was diffusion-controlled. Diffusion, being a relatively slow process, may explain why the reaction rate in the slurry as prepared was greater than the corresponding rate for the activated slurry. The reaction in the slurry as prepared showed an induction period before attaining the rates. The induction period was not present in the experiments with activated slurry. The equations for the temperature dependence of the rate constant were calculated from the data of six or more combination experiments carried out over the indicated temperature range and were used to calculate the combination rates to be expected at 250°C.

The slurry was prepared by tumbling the dry thorium-uranium oxide and molybdenum trioxide powders for 1 hr and then heating the mixture in water at 280°C for 3 hr with a small oxygen overpressure (300 psi at room temperature). The slurry was activated by heating it with hydrogen (250 psi H_2 at 25°C) at 270°C for 2 hr. Heating the activated slurry with oxygen (500 psi O_2 at 25°C) for 3 hr did not affect its catalytic activity.

Slurry Evaluation Studies (W. M. Woods). Projected dynamic studies of ThO_2 slurry systems require some means of measuring flow of slurries. Two sizes of elbow flow meters (3/8 in. and 1/4 in. i.d.) were built of glass and calibrated with water (Fig. 12.2). One of these, the 1/4-in. i.d., was also calibrated with slurry at specific gravities of 1.8 and 1.5. The calibration of velocity vs. ΔH in terms of head of fluid flowing was log-log linear (Fig. 12.3). It was the same for the two meters, and the calibration for the 1/4-in. meter fit with either water or slurry as the flowing fluid.

For the water calibration the flowmeter was simply attached to the faucet. Flows were measured by catching a measured volume of the discharge in a graduate and measuring the time. Differential head across the elbow was measured with a water—carbon tetrachloride manometer.

For the slurry calibration a simple loop, consisting of an agitated tank, an Eastern pump, the flowmeter, and appropriate stopcocks, was used. The system was cycled until well mixed, after which a three-way stopcock was quickly turned to direct the discharge into a graduate. The time for flow of a known volume was determined with a stopwatch, the differential head was read on the water—carbon tetrachloride manometer, and a sample was caught in a tared container for determination of the specific gravity.

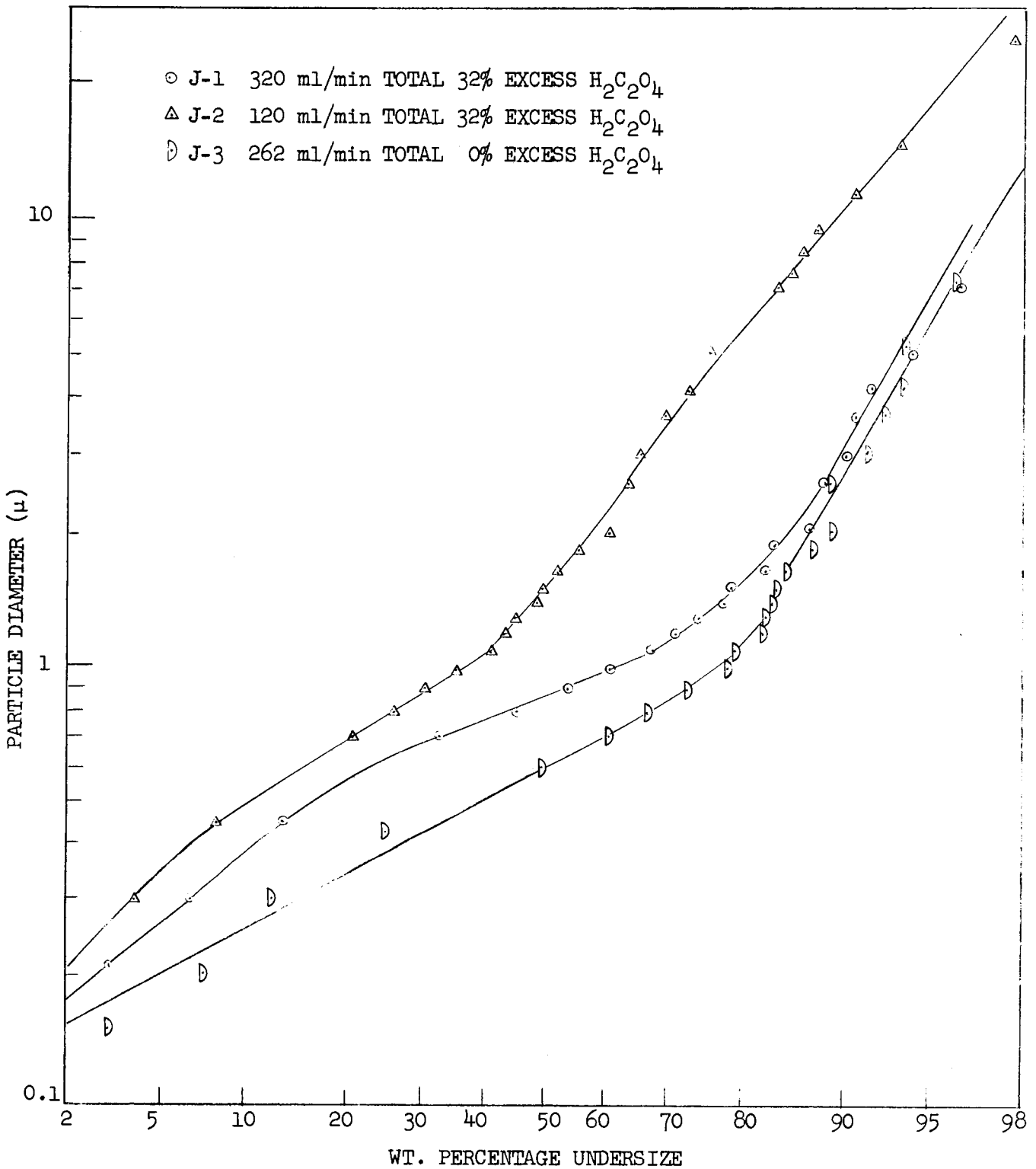

Fig. 12.1 Size Distribution of ThO_2 from 1.00 M $Th(NO_3)_4$—0.88 M $H_2C_2O_4$ in Jet Mixer.

Table 12.1. Effect of Calcination Temperature on the Viscosities of ThO_2-0.5% U Slurries Prepared from Coprecipitated Oxalates

Calcination Temp (°C)	Slurry Temp (°C)	Viscosity (centistokes) 250 g Th/ kg H_2O	500 g Th/ kg H_2O	750 g Th/ kg H_2O	1000 g Th/ kg H_2O
650	100	4	6	7	
	200	4	7	14	
	300	3	8	a	
800	100	6	7	8	
	200	5	7	14	
	300	4	7	a	
1000	100	6	6	7	
	200	6	7	12	
	300	5	8	a	
1170	100	6	6	6	
	200	5	6	9	
	300	6	5	a	
1400	100	5	7	5	
	200	4	5	7	
	300	4	4	9	
1600	100	6	6	6	5
	200	5	5	6	6
	300	4	5	5	8

[a]Could not be stirred.

The manometer lines and glass settling chambers in the elbow taps were kept clear of slurry by purging intermittently with water in such a way as to return any slurry to the system.

On changes of flow rate slurry would enter one or the other glass settling chamber in the elbow taps. While this was always purged back to the system with water before taking readings, it was noted that the presence of settled slurry in these chambers had no effect on the differential pressure. The effect of slurry head in the chamber on manometer reading appeared to be restricted to the hindered settling region, any effect vanishing as the slurry went into compaction.

The pipe elbow meter, properly arranged for purging taps, appears on the basis of these tests to be an entirely practical device for measuring flow of ThO_2 slurry systems.

Properties of High-fired Thorium Oxide (R. L. Pearson, E. V. Jones, C. E. Schilling). Preliminary dynamic tests with slurries of high-fired thorium oxide have been encouraging. Hence data have been obtained on the effect of high

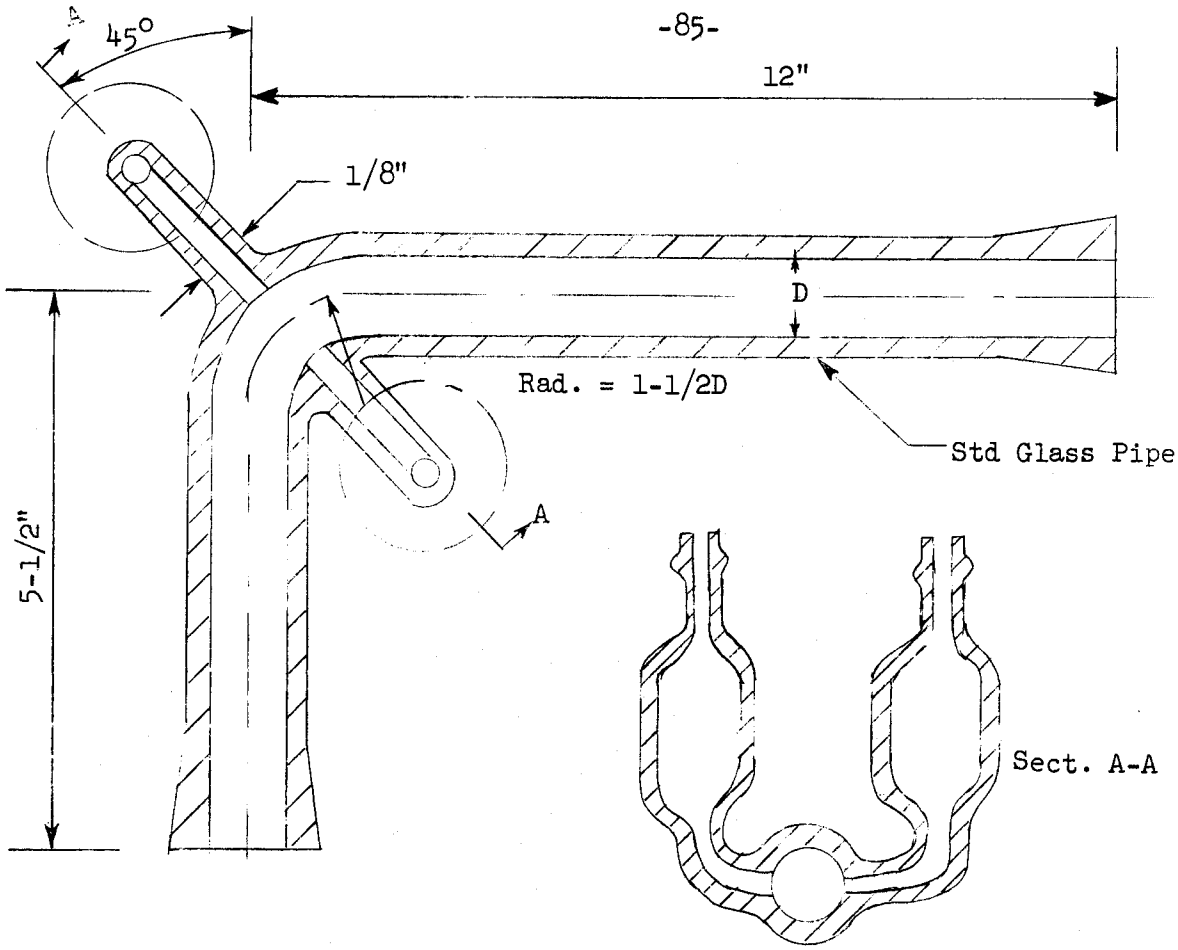

Fig. 12.2 Glass Elbow Flowmeter.

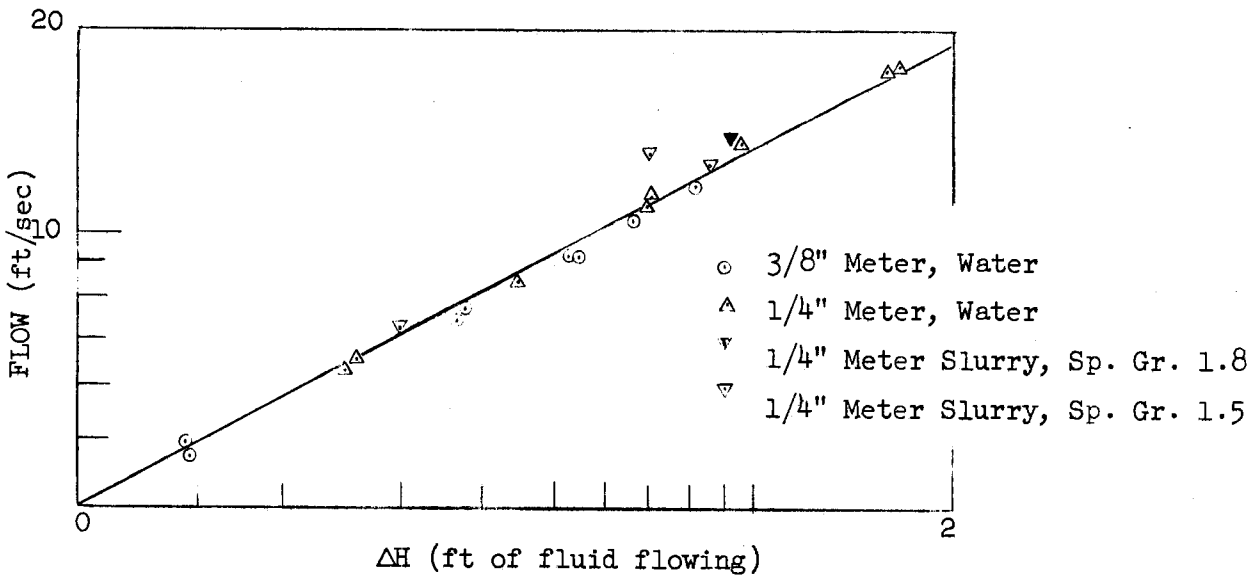

Fig. 12.3 Calibration of 1/4- and 3/8-in. Elbow Flowmeters with Water and ThO_2 Slurry.

firing (1000-1600°C) on the characteristic properties of thorium oxide, its resistance to particle degradation, and its abrasive characteristics. Pronounced sintering appeared to result from the 1400 and 1600°C firings.

Increasing the firing temperature from 1000 to 16000°C, for 6- to 12-hr firings, of thorium oxide prepared from 10°C precipitated oxalate by multistage firing ending at 650°C and 1000°C resulted in a marked increase in average particle size for 1400 and 1600°C fired materials. There was no significant difference in the characteristic properties from the use of a 650°C fired oxide, as opposed to a higher fired oxide, as the starting material for firing at 1200-1600°C.

In tests to determine the effect of mechanical handling on the average particle sizes of the high-fired materials, oxides fired at 1400 and 1600°C resisted degradation to a greater degree than those fired at 1000 and 1200°C (Table 12.2). The tests consisted in blending a 500 g Th/kg H_2O slurry 1 hr in a Waring blender, grinding 1 hr in a mechanical grinder, and treating 1 hr in an ultrasonic disperser in both the absence and presence of a dispersing agent, 0.005 M $Na_4P_2O_7$. Degradation was most efficient with the mechanical grinder. Only by this method were the 1400°C fired oxides reduced in average particle size below the original oxide. In no case was a 1600°C fired material reduced to the same average particle size as the oxide from which it was prepared.

Slurries (250 g Th/kg H_2O) of the TO-10 oxides fired at 1000, 1200, 1400, and 1600°C were tested in the jet impingement slurry abrasion tester, using a 1-mil-thick type 302 spring-tempered stainless steel shim stock. The 1600°C material was ground before testing to minimize particle size effects. Results were reproducible to ± 1.5%. Penetration times decreased with increasing firing temperature (Table 12.3). Upon impingement a second time on a fresh target, only the 1000°C material showed an appreciable increase in penetration time, presumably the result of particle degradation. Materials fired at 1400 and 1600°C showed no change in penetration time in five consecutive tests, indicating that these materials were more resistant to degradation than the lower burned materials.

Figure 12.4 shows the linear dependence of the log of the penetration time on the reciprocal of the absolute firing temperature. Crystallite growth has been shown to have a linear logarithmic dependence on the reciprocal of the absolute temperature. This may indicate that the increase in crystallite size with increasing firing temperature is the main factor contributing to the higher abrasiveness of the higher fired materials.

High-temperature Settling Studies (R. L. Pearson). The effect of particle size on the high-temperature settling rates of thorium oxide slurries (250 g Th/kg H_2O) was studied with an 800°C fired oxide, the same material after micronizing, and an oxide prepared by hydrothermal decomposition of thorium oxalate and subsequent firing at 900°C (PO-10-900). The average particle sizes of these materials were 2.6, 1.0, and 0.5 μ, respectively. The hindered settling rates decreased with decreasing particle size (Fig. 12.5). The rates were very much faster than those predicted from Stokes' law since the slurries were flocculated. The addition of silicate (10,000 ppm SiO_2/ThO_2) as sodium metasilicate slowed the settling rates markedly and had a relatively greater effect on the smaller particle material, particularly above 200°C (Fig. 12.6).

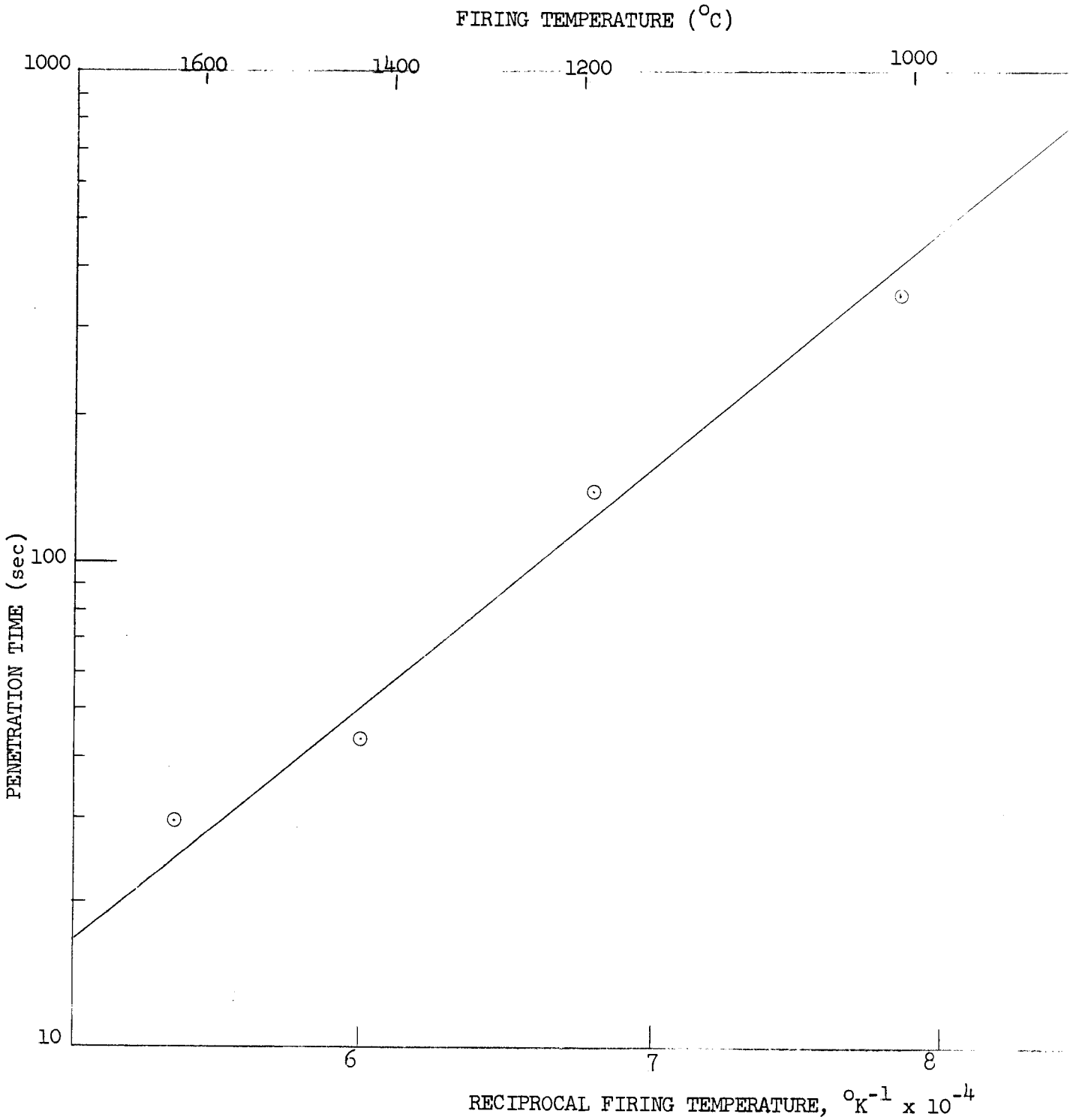

Fig. 12.4. Abrasion Test Data; Penetration Times versus Reciprocal Firing Temperature (TO-10 oxide; 250 g Th/hg H_2O)

UNCLASSIFIED
ORNL-LR-DWG. 23153

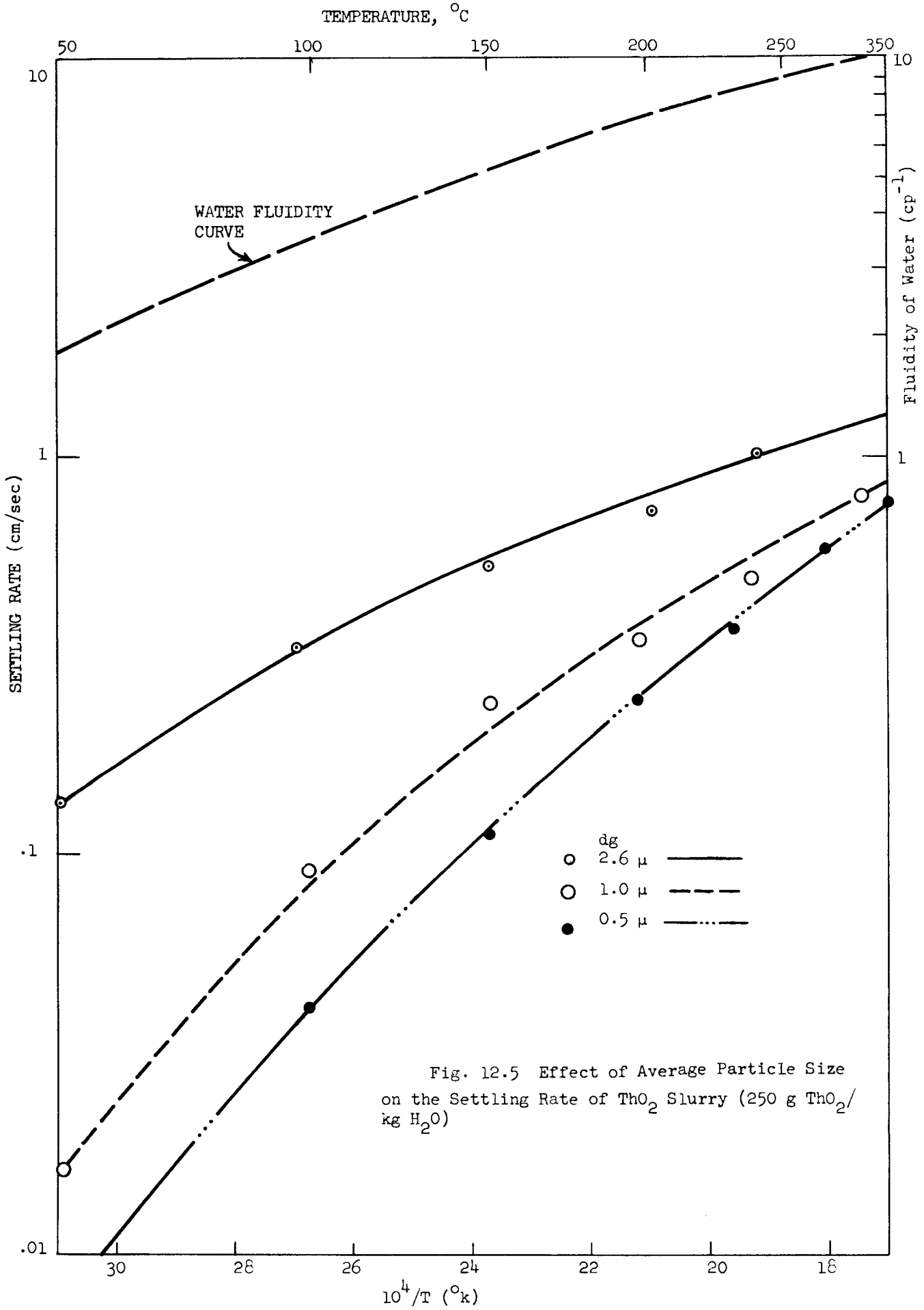

Fig. 12.5 Effect of Average Particle Size on the Settling Rate of ThO_2 Slurry (250 g ThO_2/kg H_2O)

UNCLASSIFIED
ORNL-LR-DWG. 23154

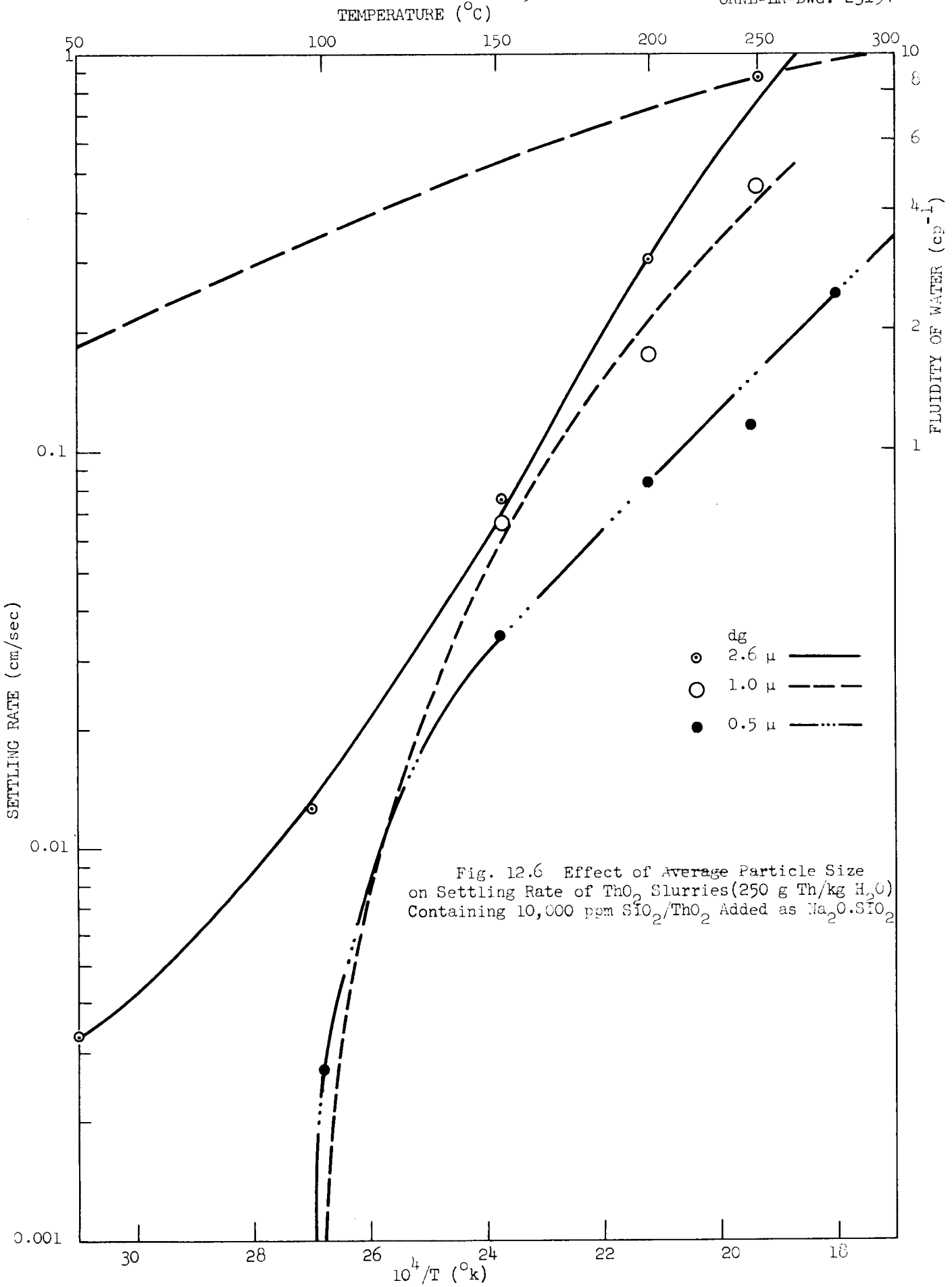

Fig. 12.6 Effect of Average Particle Size on Settling Rate of ThO_2 Slurries (250 g Th/kg H_2O) Containing 10,000 ppm SiO_2/ThO_2 Added as $Na_2O.SiO_2$

Table 12.2 Characteristic Properties of High-fired Thorium Oxide

Starting Material[a]	Final Firing Temp (°C)	Average Particle Size (μ)					Avg. X-ray Crystallite Size (A)	Specific Surface Area (m^2/g)
		Original Oxide	After Blending[b] 1 hr	After Grinding 1 hr	After Ultrasonic Treatment 1 hr			
					In water	In 0.005 M $Na_4P_2O_7$		
SO-B10-650	1200	1.1	1.1	0.7	1.1	0.9	1300	2.2
SO-B10-650	1400	1.6	1.6	1.0	1.3	1.3	--	2.2
SO-B10-650	1600	2.3	2.3	1.8	1.8	1.6	2700	0.9
TO-10-1000	1000	1.2	1.2	0.8	1.3	1.0	803	4.3
TO-10-1000	1200	1.2	1.2	0.7	1.3	0.9	1100	3.0
TO-10-1200	1400	1.5	1.5	1.1	1.5	1.5	2900	2.4
TO-10-1400	1600	2.1	2.0	1.5	1.9	2.1	2900	1.0

[a] Last figure in sample designation indicates firing temperature in °C; prepared from 100°C precipitated thorium oxalate.

[b] In Waring blender; 500 g Th/kg H_2O concentration.

Table 12.3 Abrasive Characteristics of High-fired Thorium Oxide Impinged against 1-mil type 302 stainless steel shim stock; 250 g Th/kg H_2O

Oxide[a]	Average Particle Size (μ)	Penetration Time (sec) 1st Pass	2nd Pass
TO-10-1000	1.2	346	440
TO-10-1200	1.2	138	140
TO-10-1400	1.5	44	44
TO-10-1600	1.5	29	29

[a]Last figure in sample designation indicates firing temperature in °C; prepared from 10°C precipitated oxalate.

In the pure slurries, containing no additive, there was a twofold decrease in settling rate at 300°C for a decrease in average particle size from 2.6 μ to 0.5 μ. With 10,000 ppm SiO_2/ThO_2 added there was a fivefold decrease in the settling rate at 300°C.

The settling rate--reciprocal temperature curve for the slurry of the 2.6-μ material closely parallels the water fluidity curve (Fig. 12.5). With decreasing particle size the slope of the settling rate curve increases, indicating that, particularly with the small particle material, the increase in settling rate with increasing temperature is the result of additional changes in the slurry other than the decrease in the viscosity of the water. In the presence of silicate the temperature dependence of the settling rate is more complex than in the pure slurry and the relative effect of the silicate depends on both temperature and particle size (Fig. 12.7). Even more than with the pure slurry the increase in settling rate with increasing temperature depends on other factors than a simple decrease in water viscosity.

Hindered settling rate data were obtained from room temperature to 300°C on slurries (250 g Th/kg H_2O) of PO-10-900 thorium oxide containing 0 to 30,000 ppm SiO_2/ThO_2 added as $Na_2O \cdot SiO_2$. The results were similar to those obtained with slurries of other thorium oxide preparations in that the settling rate decreased markedly with 5000-10,000 ppm SiO_2/ThO_2, particularly below 200°C. As in the other studies, the addition of 1000 ppm of SiO_2/ThO_2 caused an increase in the settling rate at slurry temperatures between 50 and 250°C.

The PO-10-900 oxide was prepared by the hydrothermal decomposition of thorium oxalate and subsequent firing of the oxide at 900°C. Its average particle size was 0.5 μ. In contrast to the results obtained with slurries of larger particle size (2.6 and 1 μ), settling rates were shown with the PO material in the presence of silicate even at 300°C.

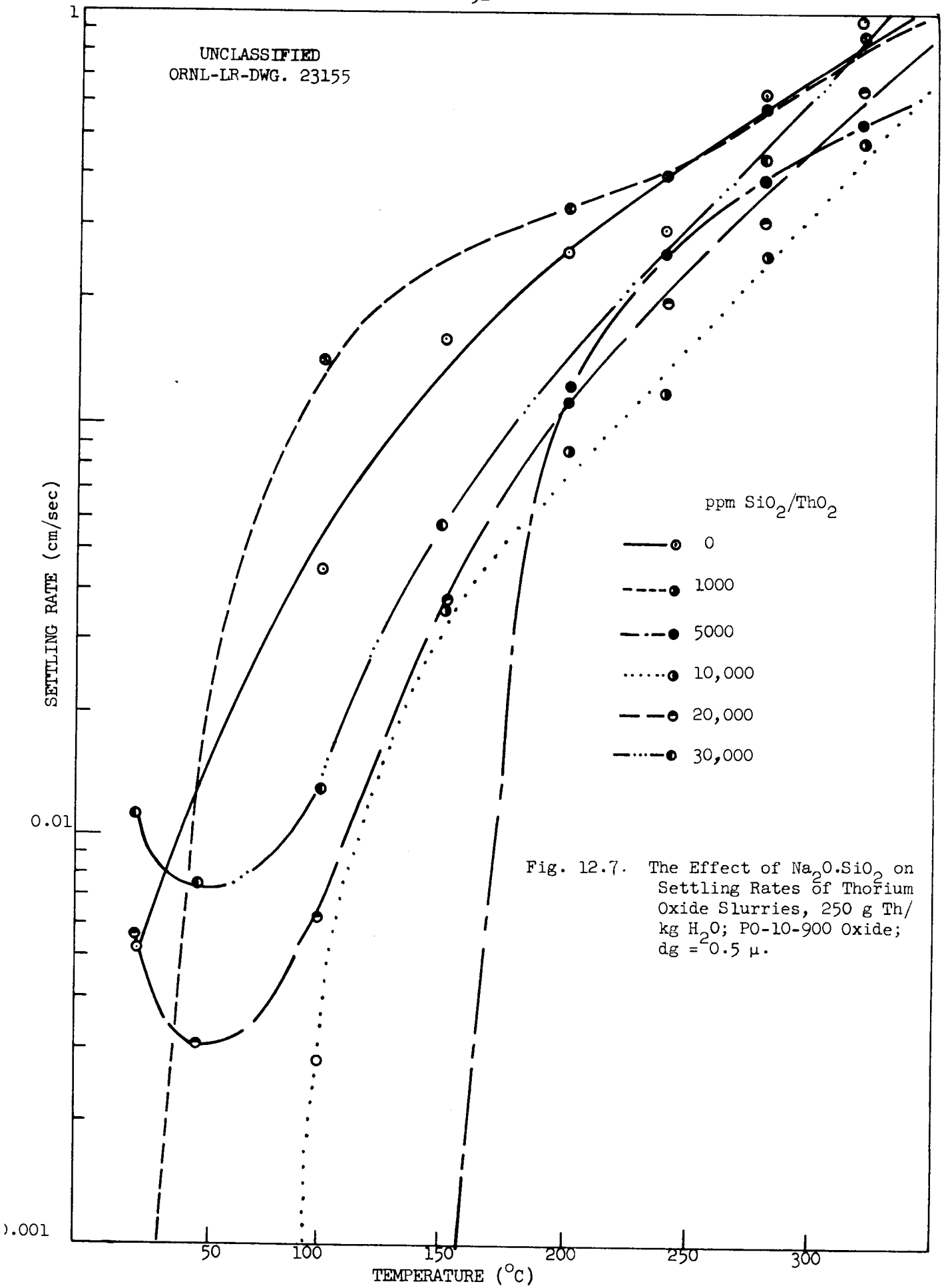

Fig. 12.7. The Effect of $Na_2O.SiO_2$ on Settling Rates of Thorium Oxide Slurries, 250 g Th/kg H_2O; PO-10-900 Oxide; dg = 0.5 μ.

Preparation of Thoria Microspheres (Work done by Houdry Process Corporation). Experimental quantities of pure thoria microspheres of 30 μ average particle size and fired at 1000°C were prepared from thoria gels formed by jet mixing thorium nitrate sol and hexamethylene tetramine solution. Particle density was 9.7 g/cc, and the specific surface area was 0.1 m^2/g. This indicates that a strong monolithic structure was formed even at the relatively low firing temperature of 1000°C.

Part IV. CHEMICAL ENGINEERING RESEARCH

13.0 ION EXCHANGE STUDIES

(C. W. Hancher, G. Jones, Jr., C. C. Nance, J. C. Rose, W. G. Sisson, J. S. Taylor)

13.1 36-in.-dia Resin Test Loop

Two pieces of auxiliary equipment for large-scale contactors being studied are the hydraulic pulsing mechanism and the resin movement recorder-controller.

Pulsing Mechanisms. A pulsing mechanism must be able to deliver a large amount of water (30 gal/min/ft^2) at relatively high pressures (50-100 psig) for short periods of time (1-10 sec). During the early development of the Higgins contactor a gear pump was used to pump water to cause the resin to be moved. When a pulsing mechanism was chosen for the 36-in. resin test loop the following specifications had to be met: 200 gal/min flow rate, controlled flow times of 1-10 sec at full capacity, and discharge pressures of 50-100 psig. Under normal operating conditions it appeared that a gear pump or single piston would not operate satisfactorily. A hydraulic accumulator system was therefore installed (Fig. 13.1). In a 120-hr test to define the operating area for hydraulic stability and the conditions for a minimum slip-water ratio, the contactor was pulsed for time intervals of 1-10 sec at pulse pressures of 20-80 psig. For pulse pressures of 60 and 80 psig the slip-water ratio for all time periods was 2.0 or lower, which is in the desirable range. The 12-in.-dia contactor at Grand Junction operated at slip-water ratios of 3.0 to 5.5. At these high ratios, backmixing is increased, resulting in greater HETS values.

Resin Movement Recorder-Controller. The ORNL Instrument Division has been working on a resin movement recorder-controller. Two types are being investigated, a photoelectric system and a mechanical system. The photoelectric system (Fig. 13.2) consists of a number of pairs of lights and photo cells which will be inserted in the reservoir section of the contactor at 1- or 2-in. intervals to measure the resin-liquid interface. The mechanical system consists of a propeller suspended inside the contactor in a section where the resin is always densely packed. A magnet is attached to the turnable propeller shaft (Fig. 13.3a), and a magnetic pickup (Fig. 13.3b) outside the contactor records the revolutions, which should be proportional to the resin movement. A model of the propeller-type meter in a 6-in.-dia resin loop (Fig. 13.4) recorded resin movement accurately within 0.25 in.

13.2 Y-12 Scrap Recovery

The main step in the recovery of low-enriched uranium from CaF_2 and MgF_2 bomb liners is an ion exchange operation in which the uranium is recovered from a sulfate slurry as uranyl nitrate. A 12-in. Higgins continuous contactor will be used as the contacting device. The contactor will be rubber or plastic lined so that chemical conditions can be changed. The proposed flowsheet is shown in Fig. 13.5.

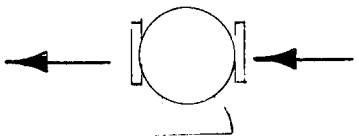

POSITIVE DISPLACEMENT PUMP
USING CONTACTOR FLUID

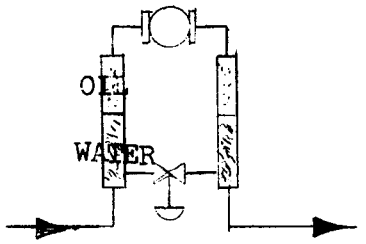

POSITIVE DISPLACEMENT PUMP
USING OIL BATH

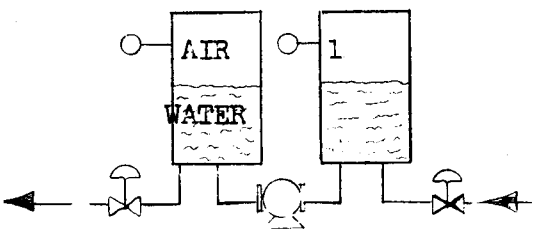

HYDRAULIC ACCUMULATOR WITH
VACUUM TANK AND POSITIVE
DISPLACEMENT PUMP

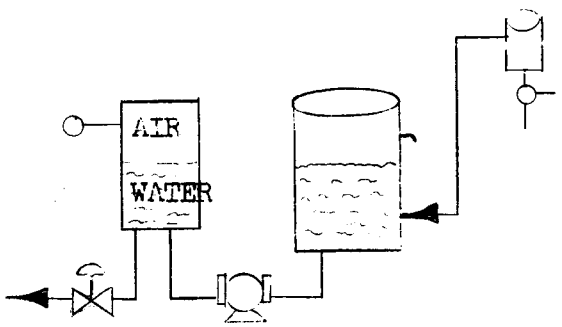

HYDRAULIC ACCUMULATOR WITH
ATMOSPHERIC TANK AND POSITIVE
DISPLACEMENT PUMP

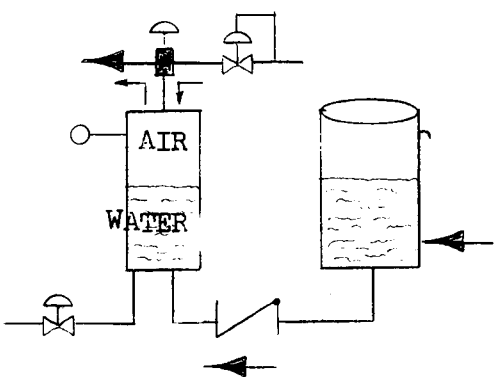

HYDRAULIC ACCUMULATOR WITH
COMPRESSED AIR AND CHECK VALVE

Fig. 13.1 Pulsing Mechanisms for Continuous Solid-Liquid Contactors.

UNCLASSIFIED
PHOTO 40533

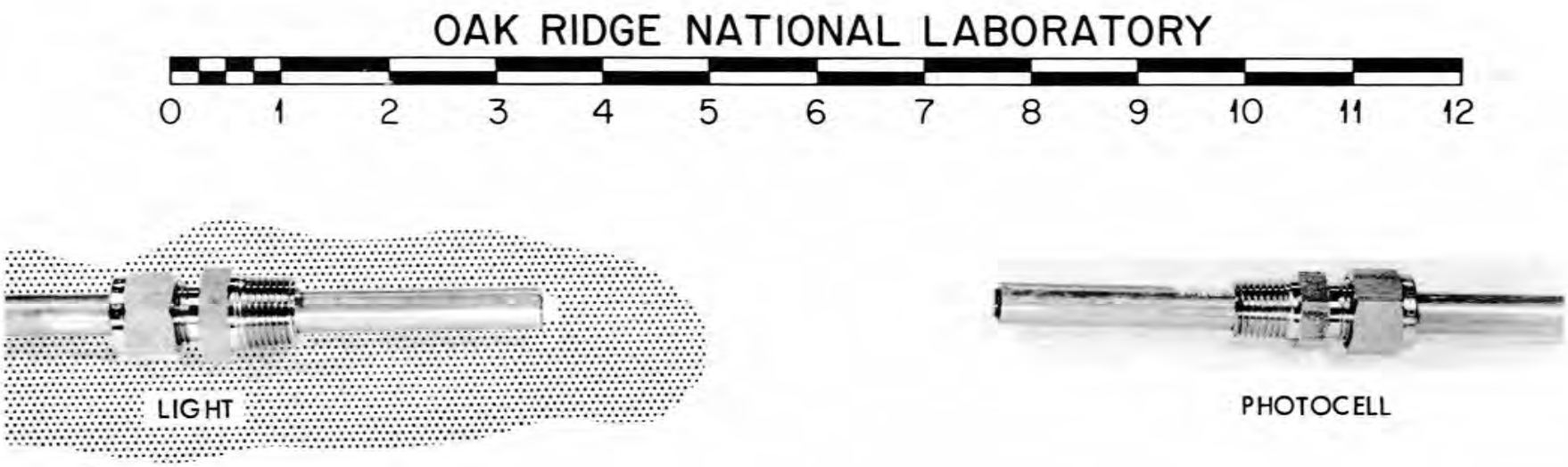

Fig. 13.2 Components of Photoelectric Resin Movement Recorder System.

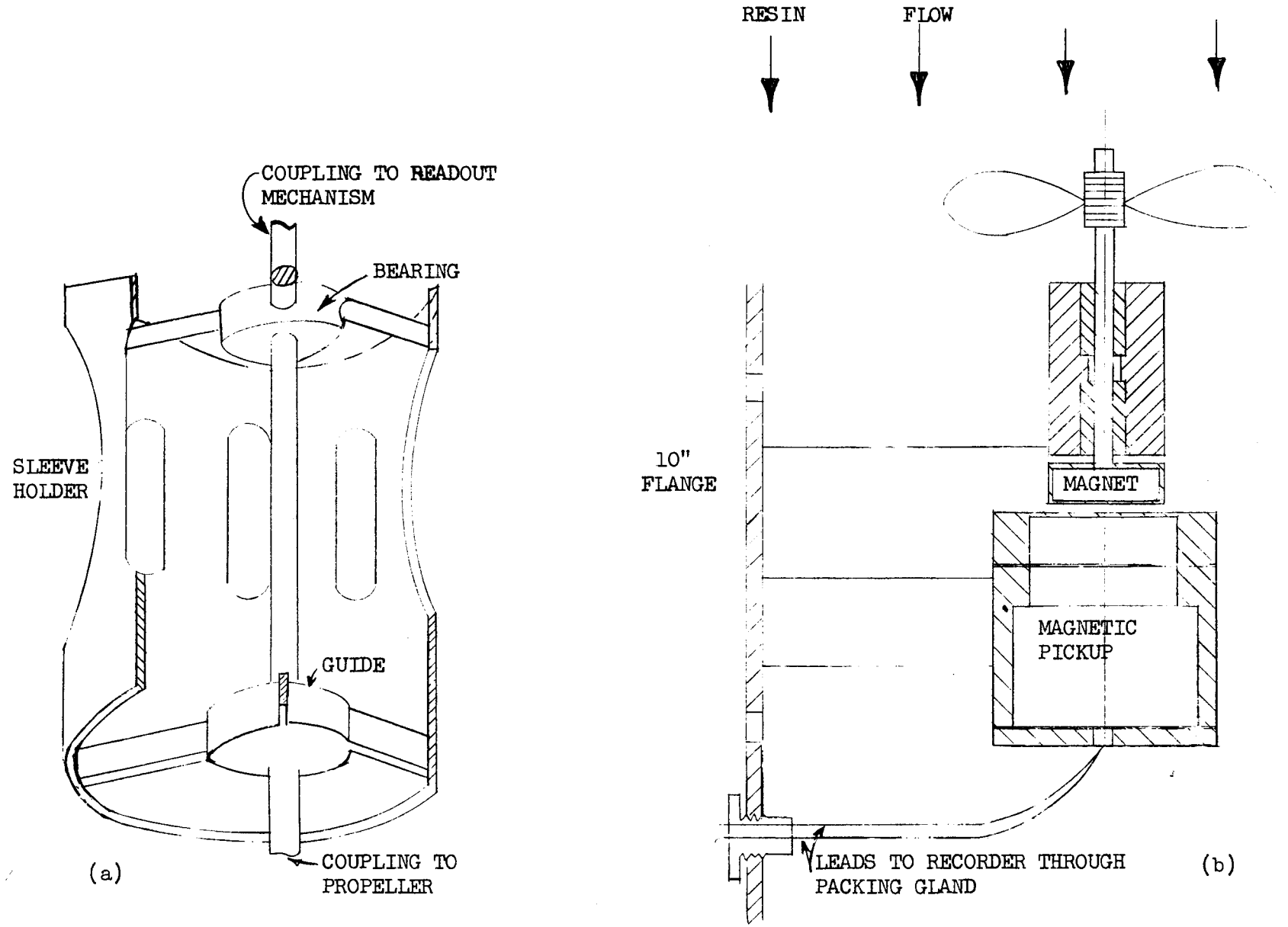

Fig. 13.3 . Resin-moving Test Equipment. (a) Propeller shaft; (b) magnetic pickup.

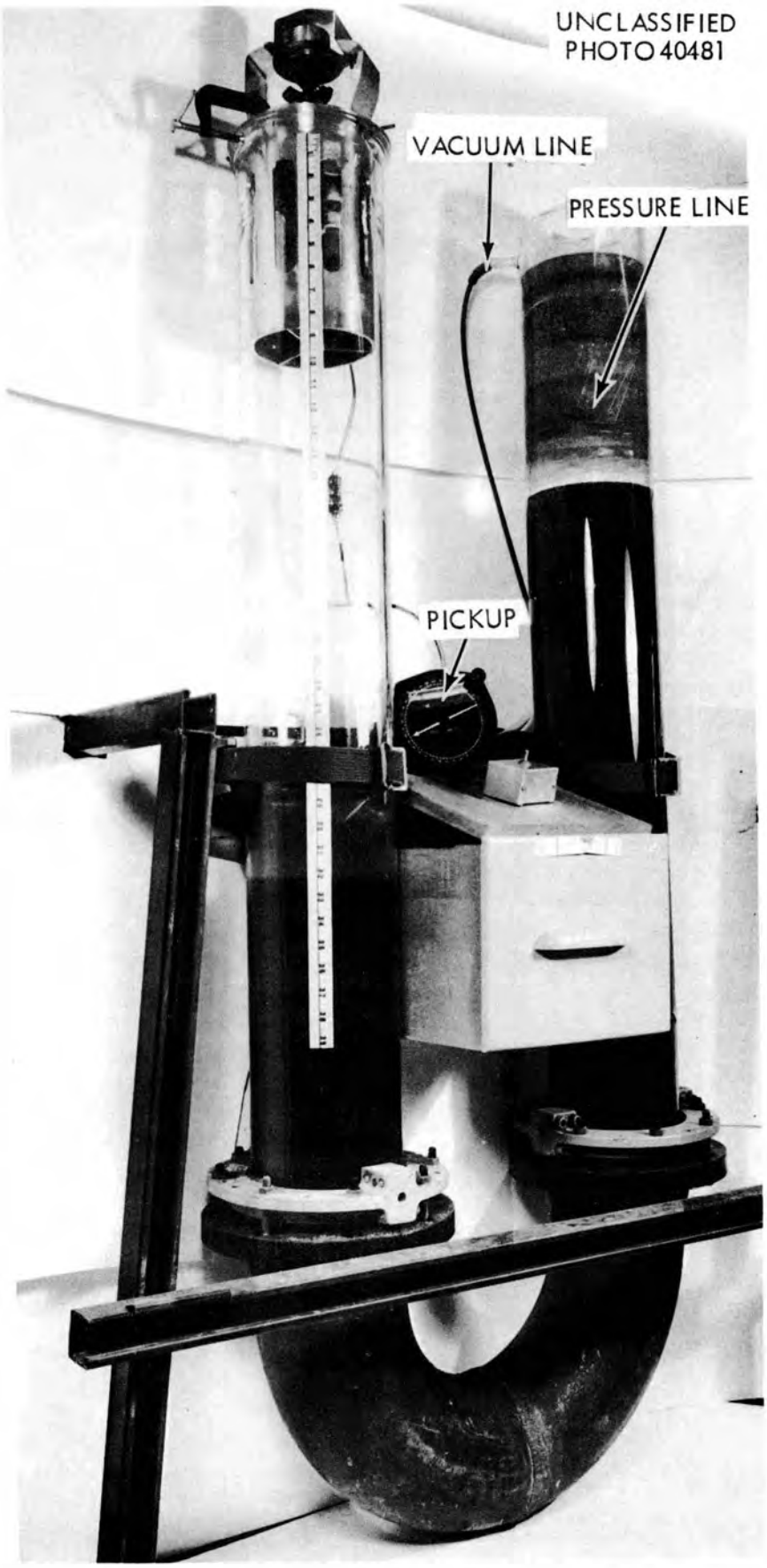

Fig. 13.4 Loop, 6-in.-dia, for Testing Resin-Moving Propeller.

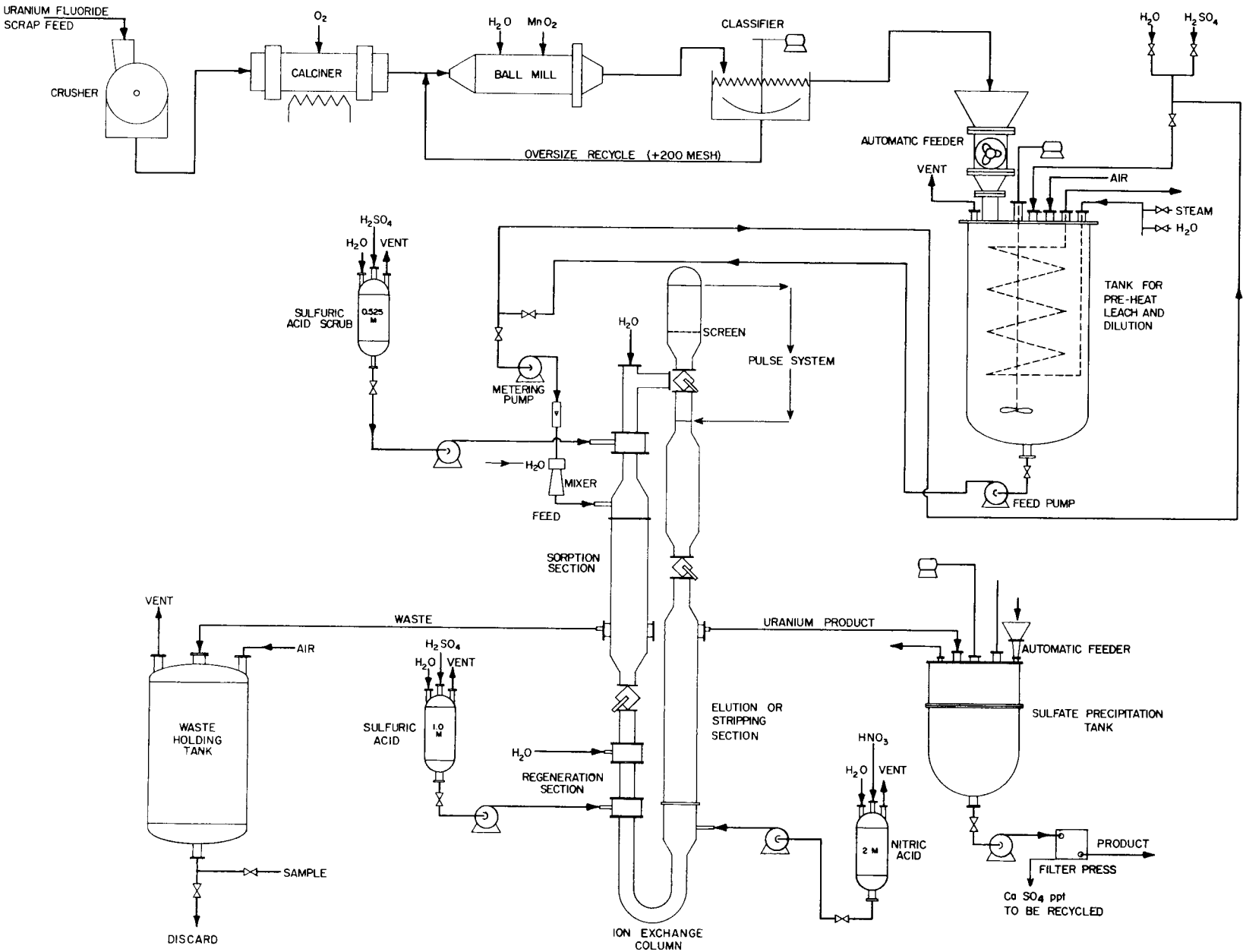

Fig. 13.5

PROCESS FLOW DIAGRAM ION EXCHANGE UNIT
Y-12 URANIUM SCRAP RECOVERY PROGRAM

13.3 Plutonium-Uranium Isolation by Ion Exchange

In a study aimed at isolation of plutonium from uranium, a 3-in.-dia continuous ion-exchange column was operated continuously for 120 hr with excellent mechanical performance. Steady-state chemical performance was not approached. To avoid a plutonium health hazard a mixture of iron and uranium was used as a simulated feed. The feed contained 9.6 g/liter iron, 2.0 g/liter uranium, and 0.25 M HNO_3 and was fed at a rate of 100 ml/min (42 gal/hr/ft^2). A 0.5 M H_2SO_4 scrub was used to complex the uranium and a 6.0 M HNO_3 stripping solution was used to remove the iron.

13.4 Resin Radiation Stability

A resin radiation stability study was revived in order to evaluate the life of resin used in a radiation field.* During the fuel reprocessing cycle the main source of radiation is beta radiation. As it is difficult to obtain a beta source for irradiation of resin samples, a gamma source is being used at present. The assumption is made that 1 r of absorbed gamma radiation will do approximately the same amount of damage as 1 r of beta radiation. Anion-exchange resins in chloride and $UO_2(SO_4)_3^{4-}$ form and cation-exchange resins in H^+ and U^{4+} form were used for the radiation damage study. It is reported in "Ion Exchange Technology," by Nachod and Schubert that the percentage reduction of capacity per kilowatt-hour per kilogram of resin is:

Cation exchange	
Dowex 50	23
Amberlite 1R-120	9
Anion exchange	
Dowex 1	40
Permutit SK	38

After 3.5×10^8 r exposure in the Co-60 source, 10-20 mesh Permutit SK resin in either form showed no capacity loss within experimental limits and no sign of brittleness or gummy surface. The type of matrix and percent cross-linkage of this resin are not known, but the active group is pyridine.

14.0 HYDROCLONE DEVELOPMENT STUDIES

14.1 Multiple-clone Operation (P. A. Haas)

The feasibility of operation with more than one hydroclone on a single induced underflow receiver is being studied. The most important factor to be determined is whether the induced underflow will divide equally among the several hydroclones. Efficient operation requires a flow from each hydroclone to the underflow receiver since a hydroclone would have a zero or perhaps even a

*Earlier work reported by I. R. Higgins, "Radiation Damage of Organic Ion-exchange Materials," ORNL-1325 (Feb. 18, 1953).

negative efficiency without this flow. In preliminary tests with LiCl solution, three identical 0.40-in. hydroclones on one receiver gave almost identical induced underflow rates and efficiencies when operated with identical feed pressures and 0 psig overflow pressures:

Test	Hydroclone	Feed Pressure (psig)	Li Conc (ppm) Co, in Overflow	Cp, in Pot	Co/Cp x 100 = B/F (%)
A	TM-SS-11	44	106	7,120	1.49
	TM-SS-13	44	96	7,120	1.35
	TM-SS-14	44	129	7,120	1.81
B	TM-SS-11	44	106	7,120	1.49
	TM-SS-13	44	112	7,120	1.57
	TM-SS-14	44	155	7,120	2.18
C*	TM-SS-11	44	108	7,200	1.50
	TM-SS-13	44	117	7,200	1.62
	TM-SS-14	44	123	7,200	1.71
D	TM-SS-11	30	215	25,000	0.86
	TM-SS-13	28	720	25,000	2.9
	TM-SS-14	28	1340	25,000	5.4

*Positions on the underflow pot changed for this determination.

When the feed pressure was decreased, the units gave high lithium concentrations because of large flows from the pot to the hydroclone. The flow into the pot was probably all through the underflow port of the third hydroclone.

14.2 Pump-Clone Contactor (C. V. Chester)

A short residence time solvent extraction contactor would be desirable to reduce solvent damage from radiation in radiochemical processing plants. The ability of a hydroclone to act as a liquid-liquid separator is the basis for the design of such a contactor, using 3-stage centrifugal pumps (Eastern Industries, Model 3-J) to mix the phases and provide pressure for the operation of the clones. A test program is underway in which a 3-stage contactor (Fig. 14.1) will be run as the extraction section of the Purex HA column and as part of the extraction section of the Redox 1A column.

Preliminary tests of the system on the Purex solutions showed hydroclone separation factors much lower than expected on the basis of previous work with a 0.4-in.-dia hydroclone operated with a turbine pump (Roth, Model 3S2128-HAS). The earlier work, with 30% TBP in Amsco and pure water through the turbine pump, was repeated in the pump-clone contactor. The clone operated with a 3-stage centrifugal pump gave maximum separation factors of about 10 compared with about 20 for the same clone driven by the turbine pump.

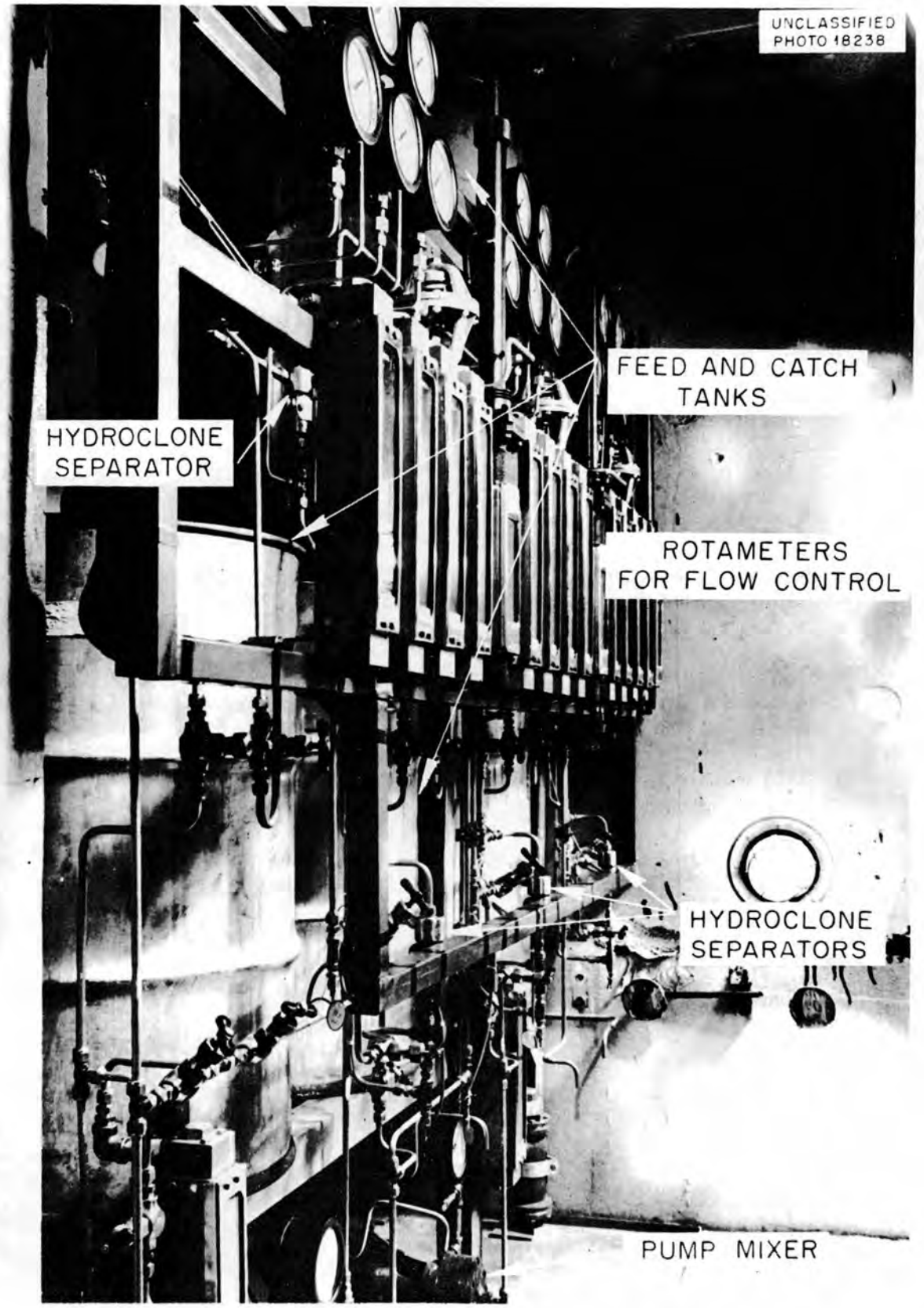

Fig. 14.1. Three-Stage Pump-Hydroclone Solvent Extraction Contactor.

The data are plotted in Fig. 14.2. Separation factors for water (SF_w) are drawn as solid lines, and those for solvent (SF_s) as dotted lines. For both solvent and water, separation factors from the turbine pump equipment are about twice those from the centrifugal pump equipment over the whole range of the control function. In addition, data are plotted for a feed containing 33% water by volume, instead of 20% as in the previous runs. This corresponds to the water ratio under Purex conditions. The maximum separation factor for water has decreased to about 2 for this feed.

The poor separation factors indicate that operation of a pump-clone contactor with a TBP organic is marginal with the present equipment. However, the data show a much greater dependence of separation on the pump, and presumably also the piping, than previously expected.

14.3 Available Literature

The following papers on hydraulic cyclone development and application studies in Holland have been received. Copies and translations of the papers are available in the CTD Unit Operations files:

(1) F. J. Fontein and C. Dijksman, "The Hydroclone, Its Application and Its Explanation," Recent Developments in Mineral Dressing, London, pp. 229-246 (1953).

(2) F. J. Fontein and C. Krijgsman, "Recent Developments in the Cyclone Washer System," Second International Coal Preparation Congress, Essen, Sept. 20-25, 1954.

(3) F. J. Fontein, "Stand der Entwicklung und Anwendung von Hydrozyklonen". Chemie-Ingenieur-Technik, pp. 190-192, January 1955.

(4) C. Krijgsman, "Versuchs- und Betriefsergebnisse mit Hydrozyklonen," Chemie-Ingenieur-Technik, pp. 540-542, January 1951.

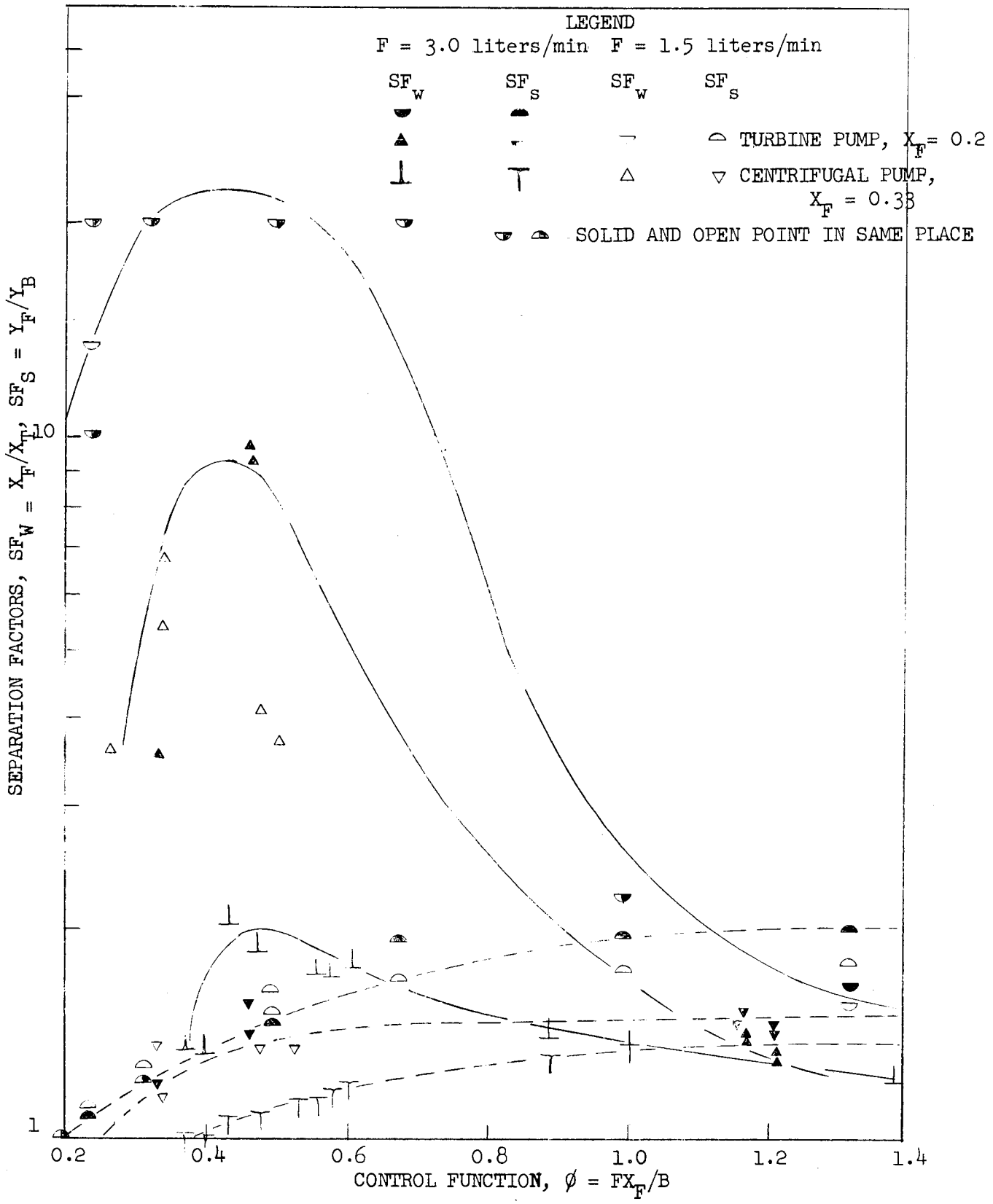

Fig. 14.2. Effect of Pump and Feed Composition on Separation of 30% TBP in Amsco and Water in a 0.4-in.-dia Hydroclone.

15.0 APPENDIX

REPORTS AND SPEECHES MADE

ORNL-2235, "Neptex Process," J. R. Flanary and J. H. Goode (Confidential)

ORNL CF No.:

57-4-119, "Chemical Processing of Irradiated Thorium Oxide Status Review for May 1956 to May 1957," E. M. Shank (Confidential)

57-5-24, "Comments on the Transportation of Irradiated Fuel and Radioactive Wastes for M. Louis Armand, Euratom Group," F. L. Culler (Unclassified)

57-5-47, "Vapor Phase Metallex Studies - Problem Statement," C. D. Scott (Confidential - Internal Use Only)

57-5-65, "Volatility Pilot Plant: Run C-2, Further Tests of Salt Handling Equipment," C. L. Whitmarsh and J. E. Bigelow (Secret - Internal Use Only)

57-5-72, "Metal Recovery Radiation Report for 2nd Quarter FY 1957," C. D. Hylton (Unclassified - Internal Use Only)

57-5-77, "Status of the Metallex Process," O. C. Dean (Confidential - Internal Use Only)

57-5-99, "Effect of Uranium Recycle on Transuranic Element Buildup," E. D. Arnold (Unclassified)

57-5-108, "Monthly Program Summary, May 1957, Chemical Technology Division," F. L. Culler and F. R. Bruce (Confidential)

57-6-6, "Specifications for Cleanliness Requirements High Level Volatility Lab. 4507," J. B. Ruch (Unclassified)

Subcontract Reports:

Houdry Process Corporation, Subcontract No. 904, "Monthly Status Report for April 1957, Preparation of Thorium Oxide Sols," T. H. Milliken (CF No. 57-5-16, Unclassified - Internal Use Only)

Houdry Process Corporation, Subcontract No. 904, "Monthly Status Report for May 1957, Preparation of Thorium Oxide Sols," T. H. Milliken (OCR-7, Unclassified - Internal Use Only)

Ionics, Inc., Subcontract No. 947, "Monthly Progress Report for May 1957-Excer," W. Juda (Unclassified - Internal Use Only)

Stanford Research Institute, Subcontract No. 1081 (SD-2080-1), "Radiation Stability of Organic Liquids, Progress Report for April 1-30, 1957," (Unclassified)

Stanford Research Institute, Subcontract No. 1081 (SD-2080-2), "Mechanisms of Surface Adsorption in Homogeneous Reactor Loops, Progress Report for April 1-30, 1957," (Unclassified)

Vanderbilt University, Subcontract No. 914, "Behavior of Actinides and Transuranics in Solvent Extraction, Progress Report for March 1 - May 31, 1957," (Unclassified)

Vitro Laboratories, Subcontract No. 535, HR Fuel Reprocessing, Progress Report for April 1957," (V-87-91-0, Confidential)

Vitro Laboratories, Subcontract No. 535, HR Fuel Reprocessing, Progress Report for May 1957," (V-87-92-0, Confidential)

Vitro Laboratories, Subcontract No. 994, "Fission Product Separations Study April 1957 Monthly Progress Report," W. A. Bain (V-2077-6-0, Unclassified)

Speeches

The following papers were presented at the Brussels Symposium on Chemical Processing and will be issued in TID-7534:

57-4-83, "Alternate Processing Methods for Zirconium and Stainless Steel Containing Fuels," R. E. Blanco

57-4-84, "Dissolution and Feed Adjustment, R. E. Blanco

57-4-59, "Radiochemical Separations Processes: Chemical Safety, A. T. Gresky

57-4-114, "Radiation Exposure and Safety Experience in Radiochemical Plants," G. S. Sadowski, T. W. Hungerford, R. E. Blanco, and F. L. Culler

57-5-10, "Session II: Auxiliary Processes: Introduction, F. R. Bruce

57-5-6, "Ion Exchange Isolation Processes, F. R. Bruce

57-4-101, "Tail-End Treatment for Zr-Nb Removal, F. R. Bruce

57-5-20, "The Thorex Process," F. R. Bruce

57-4-95, "Fluoride Volatility Process for High Alloy Fuels," G. I. Cathers

57-5-17, "Auxiliary Radiochemical Equipment," F. L. Culler and W. E. Unger

57-4-100, "General Economics of Chemical Reprocessing for Solvent Extraction Processing," F. L. Culler

57-4-91, "Development Facilities and Aids for Radiochemical Processing," F. L. Culler and E. J. Frederick

57-5-25, "Unit Costs and Economic Relationships for Certain Radioactive Waste Disposal Steps," F. L. Culler, J. O. Blomeke, and W. G. Stockdale

57-5-4, "Design for Criticality Control," J. W. Ullmann

57-4-82, "Heavy Element Isotopic Buildup," J. W. Ullmann

57-4-48, "Preparation of Waste for Liquid Disposal," J. W. Ullmann