[redacted]

~~CONFIDENTIAL~~

ORNL

12

MASTER COPY

AEC RESEARCH AND DEVELOPMENT REPORT

ORNL-2400
Chemistry-Separation Processes for Plutonium and Uranium

[redacted]

SPECIAL REREVIEW FINAL DETERMINATION

CLASS. ____ AUTH. ____

REVIEWERS/VERIFIERS	CLASS.	DATE
(1) DBaker	U	6-30-80
(2) ATGresky	U	7-7-80

Classification Cancelled
~~Or Changed To~~
By Authority Of DOC
By EEB
Date SEP 13 1971

CHEMICAL TECHNOLOGY DIVISION

MONTHLY PROGRESS REPORT

AUGUST 1957

[redacted]

Authority Of:

For:

Laboratory Records Dept.
ORNL

This document contains Confidential Restricted Data relating to Civilian Applications of Atomic Energy.

[redacted]

OAK RIDGE NATIONAL LABORATORY

OPERATED BY

UNION CARBIDE NUCLEAR COMPANY

Division of Union Carbide Corporation

UCC

POST OFFICE BOX X · OAK RIDGE, TENNESSEE

U-PSD 6/30/80

RESTRICTED DATA

This document contains Restricted Data as defined in the Atomic Energy Act of 1954. Its transmittal or the disclosure of its contents in any manner to an unauthorized person is prohibited.

~~CONFIDENTIAL~~

[redacted]

CENTRAL RESEARCH LIBRARY
DOCUMENT COLLECTION

4

AEC RESEARCH AND DEVELOPMENT REPORT

ORNL-2400
Chemistry-Separation
Processes for Plutonium and Uranium

MARTIN MARIETTA ENERGY SYSTEMS LIBRARIES
3 4456 0350540 0

Classification Cancelled
Or Changed To
By Authority Of
By Date

CHEMICAL TECHNOLOGY DIVISION

MONTHLY PROGRESS REPORT

AUGUST 1957

CENTRAL RESEARCH LIBRARY
DOCUMENT COLLECTION
LIBRARY LOAN COPY
DO NOT TRANSFER TO ANOTHER PERSON
If you wish someone else to see this document, send in name with document and the library will arrange a loan.

[redacted]

OAK RIDGE NATIONAL LABORATORY
OPERATED BY
UNION CARBIDE NUCLEAR COMPANY
Division of Union Carbide Corporation
UCC
POST OFFICE BOX X · OAK RIDGE, TENNESSEE

[redacted]

[redacted]

Printed in USA. Charge $1.50 cents. Available from the U. S. Atomic Energy Commission, Technical Information Extension, P. O. Box 1001, Oak Ridge, Tennessee. Please direct to the same address inquires covering the procurement of other classified AEC reports.

LEGAL NOTICE

This report was prepared as an account of Government sponsored work. Neither the United States, nor the Commission, nor any person acting on behalf of the Commission:

A. Makes any warranty or representation, express or implied, with respect to the accuracy, completeness, or usefulness of the information contained in this report, or that the use of any information, apparatus, method, or process disclosed in this report may not infringe privately owned rights; or

B. Assumes any liabilities with respect to the use of, or for damages resulting from the use of any information, apparatus, method, or process disclosed in this report.

As used in the above, "person acting on behalf of the Commission" includes any employee or contractor of the Commission to the extent that such employee or contractor prepares, handles or distributes, or provides access to, any information pursuant to his employment or contract with the Commission.

[redacted]

[redacted]

ORNL-2400

CHEMICAL TECHNOLOGY DIVISION

MONTHLY PROGRESS REPORT

for August 1957

F. L. Culler	- Division Director
F. R. Bruce	- Associate Director
D. E. Ferguson	- Chemical Development Section A Chief
R. E. Blanco	- Chemical Development Section B Chief
K. B. Brown	- Chemical Development Section C Chief
J. C. Bresee	- Unit Operations Section Chief
H. E. Goeller	- Process Design Section Chief
R. B. Lindauer	- Pilot Plant Section Chief

DATE ISSUED

DEC 18 1957

OAK RIDGE NATIONAL LABORATORY
Operated by
UNION CARBIDE NUCLEAR COMPANY
A Division of Union Carbide and Carbon Corporation
Post Office Box X
Oak Ridge, Tennessee

[redacted]

[redacted]

[redacted]

MARTIN MARIETTA ENERGY SYSTEMS LIBRARIES

3 4456 0350540 0

[redacted]

ORNL-2400
Chemistry-Separation Processes
for Plutonium and Uranium
M-3679 (20th ed., Rev.)

INTERNAL DISTRIBUTION

1. C. E. Center
2. Biology Library
3. Health Physics Library
4-5. Central Research Library
6. Reactor Experimental Engineering Library
7-11. Laboratory Records Department
12. Laboratory Records, ORNL R.C.
13. A. M. Weinberg
14. L. B. Emlet (K-25)
15. J. P. Murray (Y-12)
16. J. A. Swartout
17. E. H. Taylor
18. E. D. Shipley
19-20. F. L. Culler
21. M. L. Nelson
22. W. H. Jordan
23. C. P. Keim
24. J. H. Frye, Jr.
25. S. C. Lind
26. A. H. Snell
27. A. Hollaender
28. K. Z. Morgan
29. M. T. Kelley
30. M. E. Whatley
31. R. S. Livingston
32. A. S. Householder
33. C. S. Harrill
34. C. E. Winters
35. D. W. Cardwell
36. D. Phillips
37. W. K. Eister
38. F. R. Bruce
39. D. E. Ferguson
40. R. B. Lindauer
41. H. E. Goeller
42. R. A. Charpie
43. J. A. Lane
44. M. J. Skinner
45. R. E. Blanco
46. G. E. Boyd
47. W. E. Unger
48. R. R. Dickison
49. A. T. Gresky
50. C. W. Hancher
51. E. D. Arnold
52. C. E. Guthrie
53. J. W. Ullmann
54. K. B. Brown
55. K. O. Johnsson
56. H. M. McLeod
57. J. C. Bresee
58. R. B. Briggs
59. D. S. Billington
60. W. D. Burch
61. R. E. Brooksbank
62. W. H. Carr
63. J. W. Landry
64. W. H. Lewis
65. E. M. Shank
66. W. E. Clark
67. O. C. Dean
68. J. R. Flanary
69. I. R. Higgins
70. J. E. Savolainen
71. R. P. Milford
72. E. L. Nicholson
73. W. R. Winsbro
74. R. E. Leuze
75. R. A. McNees
76. J. P. McBride
77. R. H. Rainey
78. G. I. Cathers
79. C. F. Coleman
80. D. J. Crouse
81. J. T. Long
82. C. D. Watson
83. R. B. Korsmeyer
84. E. L. Compere
85. P. A. Haas
86. J. L. Fowler
87. P. M. Reyling
88. W. W. Weinrich (consultant)
89. M. D. Peterson (consultant)
90. D. L. Katz (consultant)
91. G. T. Seaborg (consultant)
92. M. Benedict (consultant)
93. C. E. Larson (consultant)
94. L. Squires (consultant)
95. J. H. Rushton (consultant)
96. ORNL - Y-12 Technical Library, Document Reference Section

[redacted]

EXTERNAL DISTRIBUTION

97. Division of Research and Development, AEC, ORO
98. American Machine and Foundry Company (C. J. Brous)
99-100. Argonne National Laboratory (1 copy ea. to Lawroski and Manning)
101-108. Atomic Energy Commission, Washington (1 copy ea. to E. Anderson, R. C. Dalzel, S. G. English, F. Kerze, Jr., M. B. Kratzer, D. R. Miller, W. N. Munster and S. B. White)
109-110. Atomic Energy Commission, Oak Ridge (1 copy ea. to D. F. Cope and R. B. Martin)
111-113. Atomic Energy Commission, Washington, Division of Raw Materials
114. Battelle Memorial Institute (C. L. Peterson)
115. Bureau of Mines, Salt Lake City
116. Carter Laboratories
117. Columbia University (Hasselis)
118. Dow Chemical Company, Rocky Flats (Matherson)
119. duPont Company, Wilmington (Worthington)
120-121. duPont Company, Aiken (1 copy ea. to E. Cole and M. Wahl)
122-123. Hanford Operations Office (1 copy ea. to Cooper and Tomlinson)
124. Houdry Process Corporation (Alex Oblad)
125. Ionics, Inc. (W. Judas)
126-127. Los Alamos Scientific Laboratory (1 copy ea. to R. D. Baker and R. P. Hammond)
128. National Lead Company of Ohio (Cuthbert)
129. National Lead Company, Winchester (Breitenstein)
130. Naval Radiation Laboratory (Ballou)
131-133. Phillips Petroleum Company (NRTS) (1 copy ea. C. E. Stevenson, D. Reid, and C. Slansky)
134-135. North American Aviation, Inc. (1 copy ea. to Library and C. Starr)
136. Sylvania Electric Products, Inc.
137. University of Utah (M. A. Cook)
138. Union Carbide Nuclear Company (K-25 Plant) (D. M. Lang)
139. Union Carbide Nuclear Company (Y-12 Plant) (R. F. Hibbs)
140. Union Carbide Nuclear Company (C-31 Plant) (R. G. Jordan)
141. University of California Radiation Laboratory, Livermore (K. Street)
142. Vitro Engineering Division (W. Pings)
143-145. Westinghouse, ARP
146-259. Given distribution as shown in M-3679 (20th ed., Rev.) under Chemistry-Separation Processes for Plutonium and Uranium category

[redacted]

CONTENTS

		Page
	Part I. FEED MATERIALS PROCESSING	
1.0	Metallex Process	6
2.0	Fluorox Process	10
3.0	Excer Process	15
	Part II. HETEROGENEOUS POWER REACTOR FUEL REPROCESSING	
4.0	Head-end treatments for Solvent Extraction Processing	18
5.0	Solvent Extraction Studies	25
6.0	Metal Recovery Plant	26
7.0	Thorex Process	28
8.0	Waste Studies	31
9.0	Americium Recovery	33
10.0	Nonaqueous Processes	42
	Part III. HOMOGENEOUS REACTOR FUEL AND BLANKET PROCESSING AND DEVELOPMENT	
11.0	HRT Chemical Plant	44
12.0	Uranyl Sulfate Fuel Processing	44
13.0	Uranyl Sulfate Blanket Processing	53
14.0	Thorium Oxide Blanket Processing	56
15.0	Thorium Oxide Slurry Development	58
	Part IV. CHEMICAL ENGINEERING RESEARCH	
16.0	Separation of Liquids	69
17.0	In-line Instrumentation	71
18.0	Ion Exchange Technology	75
	Appendix	78

[redacted]

[redacted]

RELATED PROGRESS REPORTS (LAST SIX MONTHS)

CTD Monthly Progress Reports

Feb. 1957	ORNL-2270 (70¢)
March 1957	ORNL-2307 (60¢)
April 1957	ORNL-2324 (55¢)
May 1957	ORNL-2361 (70¢)
June 1957	ORNL-2362 (55¢)
July 1957	ORNL-2385 (50¢)

Homogeneous Reactor Project

For quarter ending:	April 30, 1957	ORNL-2331 ($1.00)
	July 31, 1957	ORNL-2379 ($5.00)

All studies reported here are preliminary and conclusions are subject to change. The information is published as a formal report only to permit ready dissemination of data to interested persons.

ABSTRACT

I. FEED MATERIALS PROCESSING

Metallex Process. Thorium tetrachloride was satisfactorily reduced at a rate of 3.6 lb Th/hr, with yields of about 90% in the large-scale continuous equipment. A relation between the gamma activity and the average thorium concentration of thorium amalgams was established. Thorium determinations based on this were accurate within 5% for 50-g samples. In settling rate and centrifugation studies, the particle diameters of $ThHg_3$ formed by sodium amalgam reduction of $ThCl_4$ in Hg were 0.7 to about 16.8 μ, and were increased by aging. Filtration and activity-monitored settling rate studies roughly confirmed these data.

Fluorox Process. Two flame reactor oxidations of UF_4 with O_2 were terminated when the solids inlet nozzle was seriously oxidized as a result of flame flashback. A fluidized-bed reactor was plugged completely by fused UF_4, resulting from excessive temperatures.

In kinetic studies on the high-temperature decomposition of UO_2F_2, the reaction $3\ UO_2F_2 \longrightarrow 2/3U_3O_8 + UF_6 + 1/3O_2$ was found first order with respect to UO_2F_2. Rate constants of 7×10^{-4} and 24×10^{-4} min^{-1} were determined from thermobalance weight-loss curves at 800 and 840°C, respectively, with dry helium as an inert sweep gas.

Excer Process. Flowsheets using iron reduction of uranyl salts to U(IV) compounds were developed for ore mills using either the chloride or sulfate system. The iron is removed from the product UF_4 by ion exchange.

[redacted]

In 11 hr operation of the continuous precipitation equipment, with electrolytically produced UCl_4, UF_4 hydrate was formed at an average rate of 1 lb of uranium per hour. The precipitate settled rapidly and appeared to be all the 3/4 hydrate, with a bulk tap density of 3.4 g/cc.

II. HETEROGENEOUS POWER REACTOR FUEL PROCESSING

Head-end Treatments. In Zircex process studies, PWR blanket fuel rods were dejacketed at 600° and 725°C with anhydrous HCl in 1.5 hr and 1 hr, respectively, with losses to the sublimate and as insolubles of 0.005%, 0.002%, and 0.08%, 0.006%. Adsorption of chlorine by the unreacted UO_2 pellets was approximately 1%. Chlorination of zirconium-alloy fuels by constant-pressure chlorine gas fed into a closed system was controlled by the rate of heat dissipation from the chlorinator.

The attack of HNO_3-HF, an aqueous dissolvent alternate to nitric acid, on Zircaloy-2, was decreased sharply by increasing the concentration of Zr(IV) in the acid; 13.1 M HNO_3--0.004 M HF did not appear to be a practical dissolvent for Zircaloy-2. Dissolution rates of Zircaloy-2 and U-10% Nb in 9 M HF were 284 and 0.031 mg/cm^2.min, respectively, indicating the practicability of removing Zircaloy jackets with this reagent.

Zirconium was dissolved electrolytically to give solutions in which the F/Zr ratio was about 0.15 and which contained as much as 0.67 M zirconium with electrolytes initially 3 M in HCl and 0.1 M in HF. A metallic sludge formed at this low fluoride concentration. Short term dissolutions with a graphite anode indicated the cell resistance was lower than with platinum.

The zirconium removed from a synthetic zirconium-uranium fluoride decladding solution, in preparation for recovery of uranium by ion exchange, by raising the pH with urea and ammonium carbonate varied from 16% to 54%; the uranium carried by the zirconium fluoride precipitate varied from 0.23% to 4%.

Solvent Extraction Studies. In batch countercurrent experiments on a Purex-type solvent extraction flowsheet for separating uranium and plutonium from thorium in the Rural Cooperative Reactor fuel, a $Th(NO_3)_4$.4 TBP--TBP--Amsco third phase formed. A Thorex-type flowsheet extracted all three components satisfactorily.

Waste Metal Recovery. Approximately 4.5 tons of Paducah fluorinator ash was processed, with the recovery of 30 g of Np-237 and 3 tons of uranium. The flowsheet consists of dissolution of ash in 1.8 M $Al(NO_3)_3$--1.0 M HNO_3, one cycle of solvent extraction with 15% TBP-85% Amsco, and product concentration by evaporation. Overall neptunium and uranium losses averaged 1.7 and 0.04%, respectively. The amount of ash dissolved per mole of aluminum nitrate was increased 33% without affecting neptunium recovery. The first batch of neptunium product solution contained 6.4 g of ionium (Th-230) and 3 kg of Th-232.

Thorex Process. The 1AWC collected during run HD-19 was reprocessed in run AWD-1 to recover about 20 g of 99.5% U-233. Solvent extraction losses totaled 0.6% with an overall material balance of 103%. The observed gross gamma decontamination factor for the U-233 product was 2×10^3.

A total of 3350 kg of irradiated and 540 kg of recycle thorium was processed in run HD-26. Continuous two-cycle operation was maintained for 620 hr except for one 20-min power failure and a 12-hr interruption to acid-flush the 2C-column. A total of 3830 kg of thorium product was separated and 3130 g of U-233 was isolated; both products met activity and ionic specifications. Average gross gamma decontamination factors were 10^4 for thorium and 10^5 for uranium. Solvent extraction losses averaged 0.7% for thorium and 0.15% for uranium.

Equipment performance during runs AWD-1 and HD-26 was good. Fiberglas filter medium was replaced about every 3 days for organic streams and 10 to 14 days for aqueous streams. Optimization of the solvent recovery system hydroclones indicated that addition of water to the hydroclone feed is detrimental and that the hydroclone gives a decontamination factor, with or without water, of 1 to 3.

Design of the 1AWC facility was completed and installation is about 90% complete. Installation of the third uranium cycle, the iodine removal system, and the sample conveyor was completed. Installation of the interface purge system is 90% complete.

Waste Studies. A flowsheet for removing radioactive fission products from process waste by ion exchange and electrolysis is presented.

Americium Recovery. A solvent extraction process is being developed to separate approximately 40 g of Am-241 from 40 kg of lanthanum and cerium.

Lanthanum and americium distribution coefficients between tributyl phosphate and 7.5-17.2 M HNO_3 increased from 0.045 to 0.52 and from 0.165 to 5.2 as the acidity increased from 7.5 to 17.2 M.

In batch countercurrent extraction runs on the proposed flowsheet, a partitioning column using 15.5 M HNO_3 in 4 scrub stages and 17 M HNO_3 in 6 extraction stages recovered 99.96% of the americium contaminated with 0.93% of the original lanthanum.

Nonaqueous Processes. The use of a stainless steel, instead of glass, dissolver in the Hermex process reduced the nonrecoverable uranium loss by a factor of 20 without appreciably increasing the uranium holdup. Recent gross decontamination factors of the quasi amalgam in glass were about 50 as compared to 18 in earlier runs.

Studies on the Fused Salt--Fluoride Volatility Pilot Plant NaF absorber showed that as much as 15 kg of uranium (1.5 flowsheet batches) could be

absorbed prior to breakthrough of the UF_6 if the fluorine used is free of HF. An HF trap was installed in the fluorine supply line prior to the last two of the current series of seven flowsheet demonstration runs. A schedule of two runs per week was met during this series.

In fused salt equilibrium tests, less than 50 ppm of uranium remained in equimolar $NaF-ZrF_4$ at 600°C after contact with F_2 and UF_6 gas mixtures up to UF_6 partial pressures of 250 mm.

III. AQUEOUS HOMOGENEOUS REACTOR FUEL AND BLANKET PROCESSING AND DEVELOPMENT

HRT Chemical Plant. Following completion of the nonradioactive testing program, the HRT Chemical Plant is being readied for operation with radioactive material. Thirty minor maintenance jobs must be completed prior to closing the cell. Remote maintenance procedures to be performed ultimately with the cell flooded for shielding, are being practiced. One-third of the 30 pieces of replaceable equipment have been removed and replaced from above the cell. This maintenance practice has been with no shielding water, but several of the more difficult operations will be repeated under water.

Uranyl Sulfate Fuel Processing. In dynamic studies of the adsorption of xenon on HRT charcoal, xenon was 16 times as strongly adsorbed as krypton at 27°C and 8 times at 100°C. Of the various other adsorbents tested in static equilibrium experiments, silica gel was the best, but it had only 5-7% of the capacity of charcoal for krypton.

A silvered-alundum bed in the vapor phase of the low-pressure system of the HRT mockup trapped 63% of the iodine added to the high-pressure system. In laboratory experiments such traps operated much more effectively at 120 than at 100°C.

Uranyl Sulfate Blanket Processing. Preformed ZrO_2 in loop P-1 was removed from circulating 1.4 m UO_2SO_4 by the hydroclone; ZrO_2 formed in the loop by hydrolysis of $Zr(SO_4)_2$ was not removed.

Thorium Oxide Blanket Processing. The capacities of lead and bismuth oxide for adsorption of uranium were 0.6 g/gram of oxide and for cerium, 0.2 g/g of PbO and 0.1 g/g of Bi_2O_3. In the presence of these oxides, the adsorption of uranium and fission products on ThO_2 was decreased 10-fold or more.

Thorium Oxide Slurry Development. A jet precipitator and rotary filter were installed and operated successfully to produce thorium oxalate. Thorium oxalate was continuously fed to the flame calciner by the new feeder.

In development studies, a slurry (500 g Th/kg H_2O) of 1600°C fired ThO_2 that had been pumped 268 hr at 300°C was irradiated 336 hr in the LITR in a stirred autoclave without difficulty. A 2091-hr irradiation of a settled slurry of 800°C calcined micropulverized ThO_2 did not markedly impair its

slurry properties.

The G value for gas production in a 500 g Th/kg H_2O slurry (no catalyst added) of thorium-uranium oxide (2.8% U-235) under irradiation in the graphite pile was 0.73. Recombination rates increased from 0.03 to 0.28 mole H_2/hr.liter (at P_{H_2} = 500 psi) as the temperature was increased from 200 to 282°C.

A slurry (500 g Th/kg H_2O) of 1200°C 4-hr calcined thorium-uranium oxide containing 0.05 m MoO_3 and activated by heating with H_2 at 270°C had a hydrogen-oxygen combination rate of 53.3 moles H_2/hr.liter at 200°C and a hydrogen partial pressure of 500 psi. Heating with O_2 lowered the activity only slightly. A slurry of thorium-uranium oxide calcined 4 hr at 1000°C at Y-12 and recalcined an additional 12 hr at 1000°C had about half the catalytic activity of thorium-uranium oxide calcined at 1000°C for 16 hr in a single firing step.

The addition of synthetic flocculating agents to the jet precipitation of thorium oxalate greatly increased the settling rate of the product and eased the handling problem. The physical and chemical characteristics of the oxide prepared by firing the oxalate precipitate were unaffected by the added flocculant.

Oxides fired at 1400°C for 64 hr, 1600°C for 12 hr, or 1800°C for 2 hr resisted degradation in the jet abrasion tester. Oxide fired at 1400°C for 12 hr was degraded.

The addition of uranium to thorium-uranium oxide prepared by the decomposition of the coprecipitated oxalates increased the abrasiveness and sintering tendency when compared with the pure oxide.

The viscosities, η, of thorium oxide slurries containing 200 to 700 g Th/kg H_2O in the temperature range 25 to 90°C is related to the hindered settling rate, η_o by the equation $\eta = AU_o e^{x 2.85 \times 10^3/T^oK}$. The proportionality constant, A, is characteristic of the oxide used, and, for the oxides tested, was 0.003.

IV. CHEMICAL ENGINEERING RESEARCH

Separation of Liquids. The ability of a hydroclone to de-water solvent was independent of its size.

In-line Instrumentation. In line instruments are under development for interface leve control; uranium, nitric acid, chloride, gamma activity, and alpha activity monitoring; and flow rate and density measurements.

Ion-exchange Technology. Startup of the Y-12 uranium scrap recovery plant is scheduled for September 1.

Part I. FEED MATERIALS PROCESSING

1.0 METALLEX PROCESS
Program Leader: O. C. Dean

In the Metallex process, anhydrous thorium chloride is reduced by sodium amalgam to thorium mercuride, and massive thorium is recovered by filter-pressing and vacuum distillation of the mercury.

1.1 Large-scale Reduction Studies (G. K. Ellis)

A total of 225.4 lb of thorium metal in an amalgam phase was produced in seven runs during a total of 89.7 hr of operation of the 1.5-gal dispersal contactor, giving an average production rate of 2.5 lb Th/hr at an average reduction yield of 82.5%. Satisfactory operation of the reduction was demonstrated. Efficient washing of the quasi-amalgam product at its maximum rate of 3.6 lb Th/hr, exceeding a design capacity of 2 lb Th/hr, could be obtained only by the installation of another washing stage. Results of two runs are shown in Fig. 1.1.

Large-scale thorium chloride reduction studies have been discontinued because of the greater urgency of developmental work on UF_6 reduction. Further work would be required on the washing, filtration, and retorting steps in order to fully demonstrate the feasibility of the process. A limited amount of work remains to be done in cleanup of existing quantities of thorium amalgam; filtration-pressing to remove approximately 40 lb of readily available thorium; and carrying all thorium, within chemical specification limits, through a retorting, arc-melting, and final extrusion step.

1.2 Determination of Thorium Concentration in Thorium Amalgam by Gross Gamma Counting (O. C. Dean)

The thorium concentration of continuous thorium amalgam streams may be monitored by the relation found between the gross gamma content of the amalgam. The relation between the thorium concentration of amalgams between 0.2 and 1.6 wt % thorium (Fig. 1.2) is accurate to about ± 5% if 50-g samples of amalgam are counted in a 13- by 20-mm pyrex tube in a sodium iodide counting cell. The sample must be isolated from air between sampling and counting, and, if there is more than a few minutes time lapse, the tube should be agitated before counting. A correction for decay and daughter buildup during the time interval between sampling and counting was applied to the gross count (Fig. 1.3).

1.3 Settling Rate Studies (O. C. Dean)

Settling of $ThHg_3$ in amalgams produced by sodium amalgam reduction of $ThCl_4$ at varied rates was observed. Since there is no observed interface for the Hg-$ThHg_3$ system, the following methods of observing rate of particle fall were devised. In a glass cylinder, two side sampling points embraced 31% of the entire capacity. Samples were withdrawn at timed intervals and analyzed for thorium. The average of the upper and lower sampling point concentrations was used to determine a rate of increase of thorium in the 31% zone. The

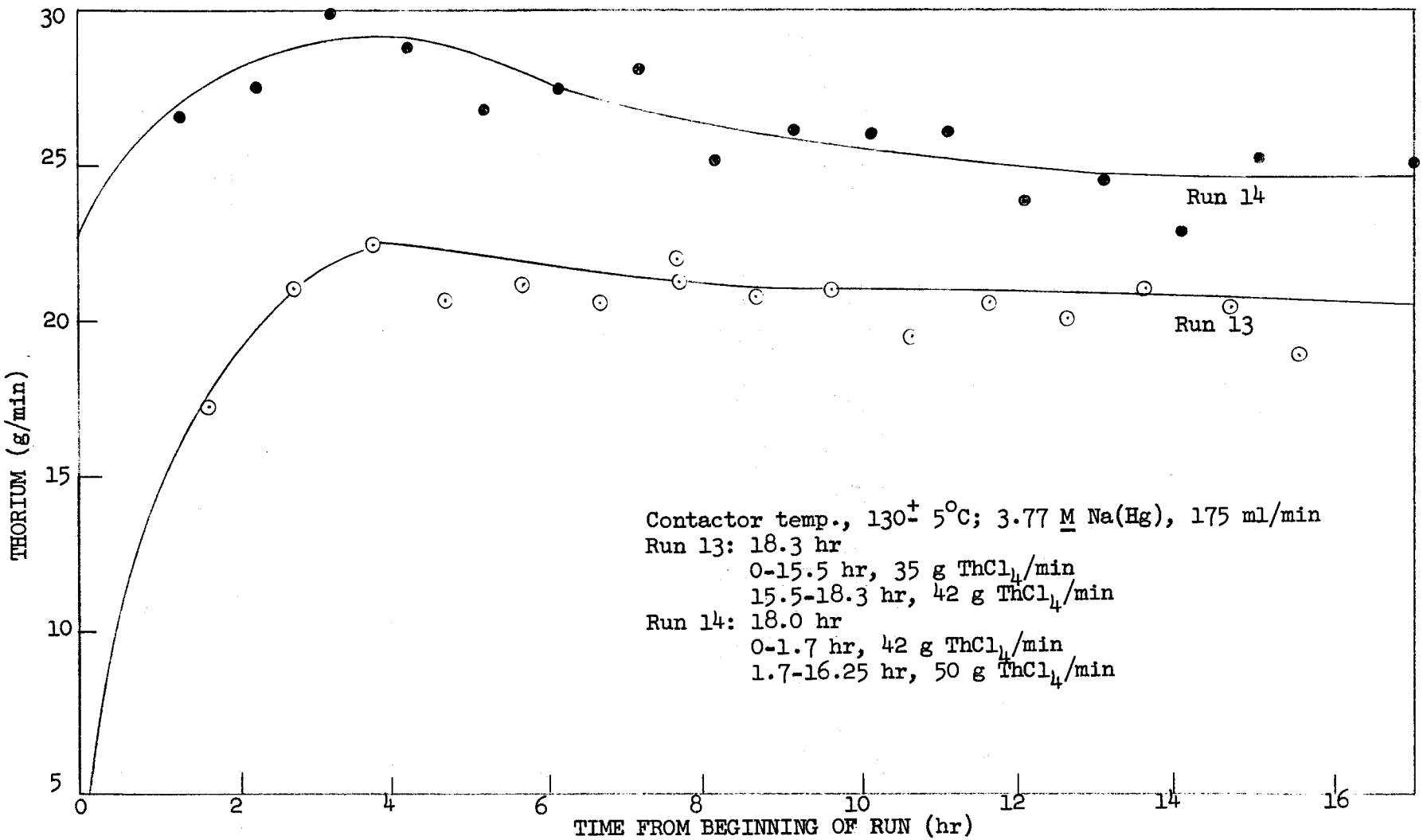

Fig. 1.1. Thorium Production in 1.5 gal Dispersal Large-scale Reduction Contactor

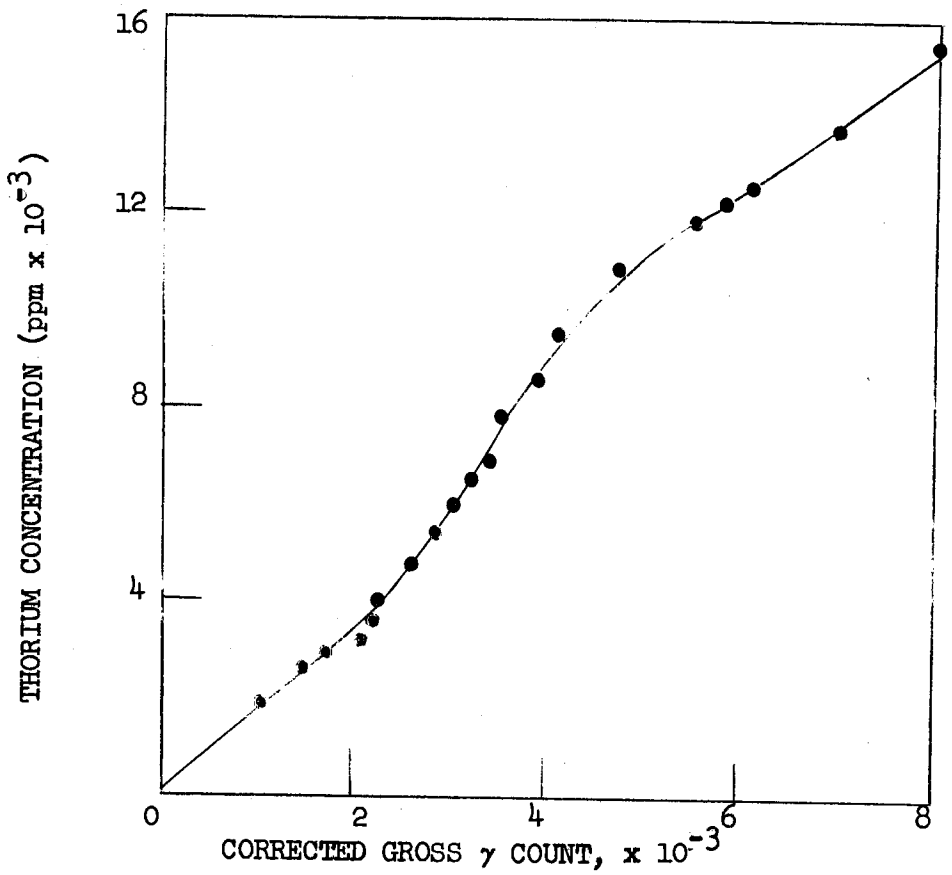

Fig. 1.2. Determination of Thorium Concentration from Gross γ Count in Thorium Amalgams.

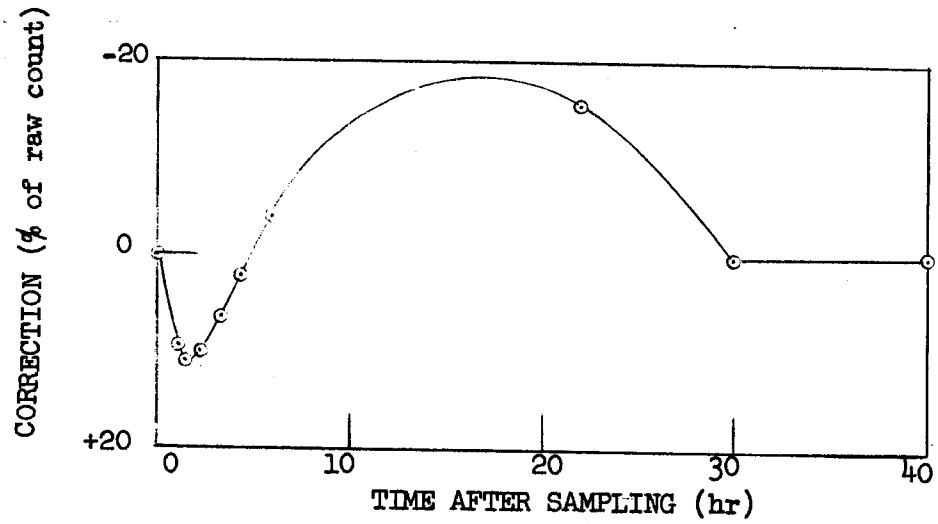

Fig. 1.3. Correction of Raw Count in Determination of Thorium Concentration by Gross Gamma Count.

distance of particle travel was taken from the surface to the linear center of the zone, and was 18.4 cm. The percentage of thorium particles falling to this point was determined as a function of time. The application of Stokes' law for hindered settling permitted an estimation of particle size distribution. For amalgams 30 days and 1 day old, the particle sizes ranged from <1.7 to >16.9 μ. For the 30-day-old amalgam the settling rates varied from <0.0042 to 0.615 cm/min, and the particle diameters from 1.8 to >16.8 μ. Eighty-four percent of the particles had diameters of >16.8 μ, and $<1\%$ less than 1.8 μ. For the 1-day-old amalgam 66.6% of the particles had diameters <1.7 μ and none >11.8 μ. Only 12.7% were >9.7 μ. Settling rates were from <0.0042 to 0.307 cm/min with more than two-thirds of the thorium settling at less than the lower rate. The difference between aged and newly prepared amalgams explains difficulties in thorium recovery by filtration and pressing, and shows that slow flocculation or crystal growth occurs.

1.4 Centrifugation Studies (O. C. Dean)

Thirty-day-old amalgams ranging in thorium concentration from 0.028 to 1.8 wt % were centrifuged at 410 G for 15 and 20 min. The thorium concentration in the supernatant mercury was 168-278 ppm, the lowest occurring in the 1.8% thorium amalgam. The 1.8% thorium amalgam produced the most concentrated quasi amalgam (4.31 wt % thorium), and 99.4% of the thorium was concentrated into 37.8% of the volume in 20 min.

Application of the Cunningham modification* of Stokes' law for estimating the lower limit of particle size of settled thorium mercuride showed 0.9 μ for the dilute amalgam and 0.71 μ for the more concentrated amalgam. It was thought that, in the more concentrated amalgam, some of the smallest particles were carried down with the larger.

1.5 Amalgam Filtration Studies

One-day-old amalgam containing 0.88 wt % thorium was filtered successively through enclosed, sintered type 316 stainless steel filters with average pore diameters of 3, 7, and 12 μ, with provision to prevent particle by-passage, at 25°C and under 50 psi of argon. One and two-tenths percent of the thorium passed through the 3-μ filter, 9.8% through the 7-μ filter, and 38.8% through the 12-μ filter. In a previous experiment with two weeks' old amalgam, 7% of the thorium passed the 12-μ filter. Results indicate that the filters catch smaller particles than the pore diameters warrant, and that the larger particles tend to build a filtration mat. They also show a flocculation or crystal growth in thorium amalgams with time at room temperature. A preliminary study by G. W. Leddicotte (Analytical Chemistry Division), by monitoring settling rates by gamma counting, showed the particle size range for a two-week-old amalgam to be 1.8-8 μ.

1.6 Vapor-phase Reduction of UF_6 by Sodium (C. D. Scott, W. G. Sisson)

Metallic uranium was produced by vapor-phase reduction of UF_6 with sodium. The button of metal formed in the bottom of the reactor contained 13.9% uranium and inconel, the latter resulting from melting of the gas inlet tube. The mater-

*J. H. Perry, "Chemical Engineers' Handbook," 3rd Ed. McGraw-Hill, New York, p. 1019.

ial balance indicated some uranium loss, which may have been due to a non-homogeneous analytical sample:

Wt (g)	Total Material Balance	U Material Balance
Reactants:		
Sodium	57.0	
UF_6	100.0	
Uranium in UF_6		67.7
Total	157.0	
Products:		
Uranium in metal button	3.1	3.1
Other reaction products	150.0	
Uranium in reaction products		48.0
Total products (excluding inconel in metal button)	153.1	
Total U		51.1

The reduction was carried out in a 2-in.-dia contactor (Fig. 1.4). UF_6 and helium were introduced into the hot contactor which contained a small amount of liquid sodium and an atmosphere rich in sodium vapor. The bulk of the 100-g UF_6 charge was introduced in a very short time, <1 min. The large flow rate was due to the excessive temperature of the UF_6 container prior to the UF_6 introduction.

The measured inside contactor temperature increased from 755 to 1015°C within 30 sec after the initial introduction of UF_6, although the actual temperature at the UF_6 entrance must have been greater than 1400°C since some of the inconel at this point melted. The inside temperature of the contactor decreased rapidly from the 1015°C high; there was a 200°C decrease within 5 min, which indicated that the duration of the reaction was short.

2.0 FLUOROX PROCESS
Program Leader: J. C. Bresee

In the Fluorox process, UF_6 is prepared by oxidizing UF_4 with oxygen or dry air at high temperatures. The UF_4 may be obtained by simultaneous reduction and hydrofluorination of UO_3 and UO_2F_2, by the Excer process, or by conventional feed materials processes.

2.1 Oxidation of UF_4

Flame Reactor (C. D. Scott, W. G. Sisson). The flame reactor is to be used to continuously react UF_4 with oxygen in a CO-O_2 flame at temperatures above 1000°C. Two runs in the flame reactor were terminated when the solids

nozzle was severely oxidized as a result of flame flashback. Because of the higher feed rate in the first run, a large amount of solid product was deposited on the side of the reactor. This did not occur in the second run in which the UF_4 feed rate was much lower. Most of the product in the second run was collected in the filter housing. The product from the second run was dark in color, indicating the presence of some uranium oxides. Analytical results on the products are not complete.

The lavite burner eroded somewhat during these runs, but it is still operable. A larger diameter solids nozzle is being fabricated. This increase in diameter will decrease the burner annulus and should make flame flashback easier to control.

The design of an all-metal burner assembly has been completed (Fig. 2.1), and it is now being fabricated. This burner will have both external and internal gas mixing, which should help eliminate flashback in the burner assembly. Gas flow rates for this burner will be somewhat lower than for the present system.

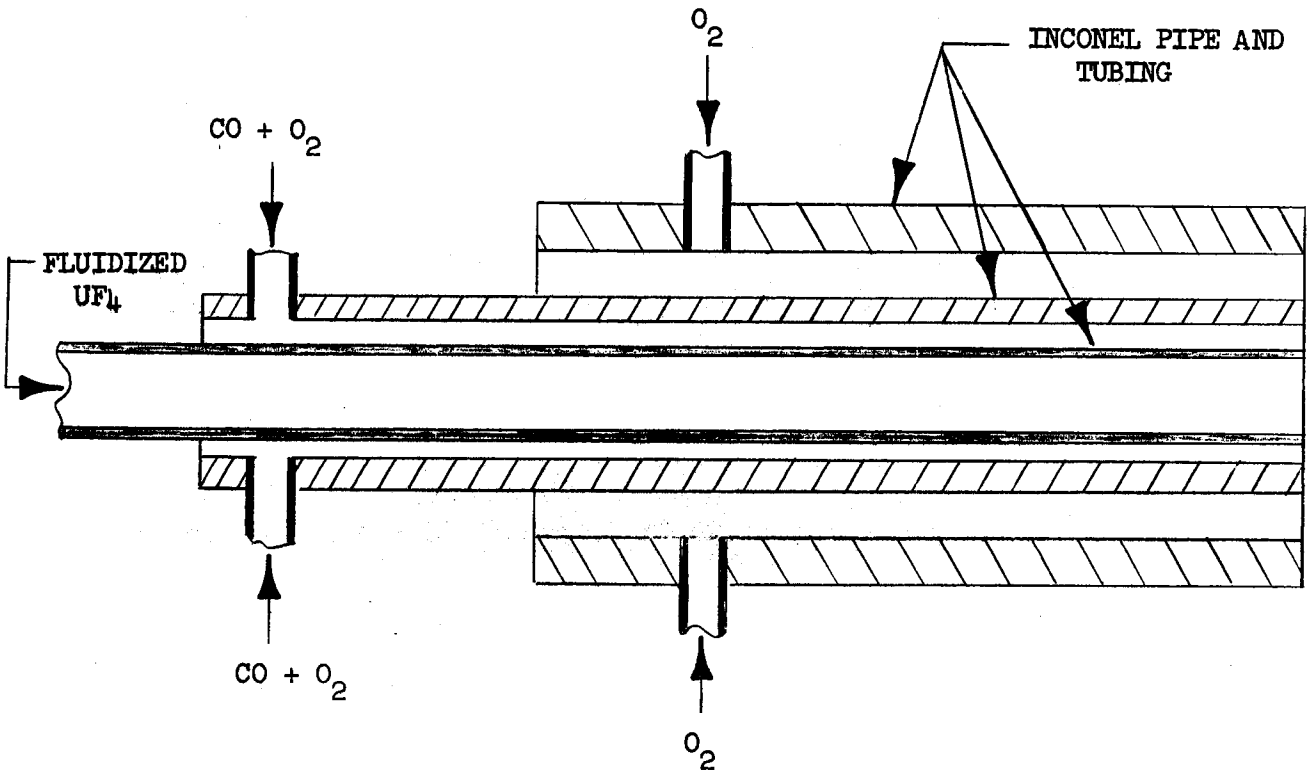

Fig. 2.1. Fluorox Flame Reactor All Metal Burner

CO will be used in the flame reactor rather than some other fuel in order to keep water out of the process; water would react with UF_6 and decrease the amount of product. Commercial grade CO has some H_2, water, and saturated hydrocarbons which contribute to water vapor in the gas stream. Pure grade CO has been obtained which will produce much less water when burned:

Component	Commercial	Pure
CO	96.8%	99.87%
CO_2	0.36 %	---
H_2	0.97%	<0.02%
O_2	--	0.02%
N_2	1.0%	0.10%
Saturated hydrocarbons	0.8%	---
Dew point	0°F	-60°F

The decrease in H_2 and water in the CO gas is expected to make combustion in a flame more difficult, since water and H_2 have a catalytic effect on combustion.

Fluidized-bed Reactor (J. B. Adams). Excessive temperature and resulting fusion of UF_4 resulted in failure of a fluidized-bed reactor run. The reactor plugged completely. This indicates that the reactor should be started up on UO_2F_2, which does not melt, and that the percentage of UF_4 in the bed at any time should be kept low.

In this run a mixture of 5.5 lb of UF_4 and 5.5 lb of UO_2F_2 was charged. The reactor was successfully heated up from 25 to 740°C while fluidizing with nitrogen. A required change of nitrogen cylinders at this time stopped fluidization for about 10 sec. The temperature rose rapidly and peaked at 950°C, and the pressure drop across the reactor became large. All attempts to resume operation failed and the system was shut down. White fumes in the off-gas were noted as the bed temperature approached 950°C.

Inspection of the reactor contents after cooling indicated almost complete fusion. A very hard, black, dense, glassy material plugged most of the reactor. A sample of this material analyzed 70.6% U (total), 61.0% U(IV), 17.0% F, and 31.0% ammonium oxalate insolubles. X-ray diffraction analyses showed only UF_4. The high AOI analysis, indicating U_3O_8, and the change in the U(IV)/U(VI) ratio $\left[\frac{\%\ U(IV)}{\%\ U(VI)} \approx 1\right.$ in the charge; $\left.\frac{\%\ U(IV)}{\%\ U(VI)} \approx 6\right]$ in the residue combined with the evolution of white fumes from the system indicated decomposition of UO_2F_2. The reaction postulated is $9UO_2F_2 \longrightarrow 2U_3O_8 + 3UF_6 + O_2$. Laboratory studies of UO_2F_2 decomposition (Sec. 2.3) indicate that this is the probable mechanism and that the rate is appreciable above 900°C.

The suggested operating procedure is:

1. Heat the bed to reaction temperature (750-850°C) on essentially UF_4-free material, i.e., UO_2F_2.

2. Add the UF_4 in small amounts, and not to more than 10-20% of the total weight of the bed. At temperatures below 750°C a higher percentage of UF_4 can probably be handled.

3. Never stop the gas flow to the reactor since the refractory heaters outside the wall are at about 1000°C. Only excellent transfer at the reactor wall during fluidization maintains the wall temperature below the melting point of UF_4 (~960°C). When gas flow stops, the wall temperature rapidly approaches the heater temperature.

UO_2F_2 is being prepared by screening UO_3 to obtain a 40 x 100 mesh fraction and hydrofluorinating this to UO_2F_2 with anhydrous HF gas. A double-valve gas-lock system suitable for charging UF_4 to the reactor while at temperature has been installed. All gas supply equipment has been manifolded. Fluidization will not have to be interrupted to change oxygen or nitrogen cylinders.

2.2 Recovery of Accumulated UF_6 (J. B. Adams)

Thirteen pounds of UF_6 was recovered from a 25-ft^3 cold trap that had been in use for UF_6 recovery for over a year. The large trap was heated with heat lamps, pressurized at 20 psig with nitrogen, and bled at 4 scfh into two small cold traps (1 ft^3 each), which were kept at 25 to 75°F by trichloroethylene--dry ice. Visual observation of the reaction of UF_6 in the gas stream with water vapor in the cell air indicated the presence of UF_6 at all times during the recovery operation. The operation was shut down when the small cold traps showed no appreciable increase in weight. Finally, all vessels were flooded with water to recover uranium for inventory purposes. More than 2 ft of a 0.5-in. feed tube was found plugged with UF_6 and UF_6 hydrolysis products, mainly uranyl fluoride, when the traps were opened. The accumulated UF_6 was estimated as 70 lb.

2.3 Laboratory Studies (L. M. Ferris)

In the flame reactor (Sec. 2.1), where temperatures may be as high as 1300-1500°C, UO_2F_2 is expected from thermodynamic estimates* to be thermally unstable with UF_6 as a decomposition product. U_3O_8 would thus be expected as a solid product of the reaction of UF_4 and oxygen at temperatures above 1000°C, resulting in a higher UF_6 yield per unit mass of feed and a smaller recycle stream than when UO_2F_2 is the solid product. The reaction also represents a possible recycle scheme for UO_2F_2 produced from the UF_4-O_2 reaction at temperatures below 900°C, and formation of UF_6 directly from UO_2F_2 produced by hydrofluorination of UO_3 becomes a possibility.

The results of exploratory experiments indicate that the decomposition proceeds according to the reaction $3UO_2F_2 \longrightarrow 2/3U_3O_8 + UF_6 + 1/3O_2$, with vaporization of UO_2F_2 as a parallel reaction at temperatures above 825°C. The decomposition is kinetically of the first order with respect to UO_2F_2, with indications that the decomposition rate can be decreased by increasing the partial pressure of oxygen in the gas phase. Rate constants were 7×10^{-4} and 24×10^{-4} min^{-1} at 800 and 840°C, respectively, with dry helium as an inert sweep gas. The helium flow rate in each case was 300 ml/min as measured at 25°C. The experiments were performed in a thermobalance with 2-g UO_2F_2 samples.

*L. M. Ferris, "Laboratory Development of the Fluorox Process: The Reaction of UF_4 with Dry O_2. I. Side Reactions and Thermodynamics," ORNL-2180 (Feb. 19, 1957).

The low rate constants are in agreement with the observed stability of UO_2F_2 at temperatures below 800°C. However, UO_2F_2 is expected to be unstable above 900°C because of the marked increase of the rate constant with temperature. Reaction between UF_4 and oxygen at these temperatures should yield U_3O_8 as the main solid product; i.e., the reaction $3UF_4 + 4/3O_2 \longrightarrow 1/3U_3O_8 + 2UF_6$ should predominate over the reaction $2UF_4 + O_2 \longrightarrow UO_2F_2 + UF_6$.

3.0 EXCER PROCESS
Program Leader: I. R. Higgins

The Excer process is an aqueous process for the production of uranium tetrafluoride, in which a uranyl salt is reduced to a U(IV) salt, and UF_4 hydrate is precipitated and dehydrated. The feed for the reduction step may be prepared by ion exchange.

3.1 Reduction by Iron (I. R. Higgins)

Flowsheets in which uranyl sulfate in ore leach pulp is concentrated by anion exchange and then reduced by iron, instead of by electrolysis as in the original Excer flowsheets, are proposed (Figs. 3.1 and 3.2).

In preliminary tests on removal of iron from the product, U(IV) was separated from Fe(II) by factors of 5-10 in a fixed bed Dowex A-1 anion-exchange resin system. In a continuous run in the 2-in.-dia contactor with Permutit SK anion-exchange resin, the separation factor was 1.3; uranium losses in the waste were 1-5%, and the product solution was 5-20% oxidized.

The elution of uranium from anion-exchange resin with sulfuric acid (Fig. 3.2), instead of the standard chloride or nitrate elution, has been studied at the Winchester Raw Materials Laboratory (WIN-28). In a fixed bed test uranous sulfate was also well sorbed on anion-exchange resin and eluted with sulfuric acid. Ferrous sulfate had a low affinity for the resin, which should provide ready separation of U(IV) from Fe(II).

3.2 Continuous Precipitation (K. O. Johnsson)

Installation of the monel precipitation tanks was completed. In a run in this new equipment, totaling 11 hr over a period of several days, the average uranium throughput rate was 1 lb/hr. The product UF_4 hydrate settled rapidly and appeared to be entirely the 3/4 hydrate.

Approximately 20 lb of uranium, which has been through the ion exchange and reduction steps, is being carried through the rest of the Excer steps. The waste acid (containing some uranium) from the precipitation will be used in the preparation of another batch of feed material. About 3 lb of very dense UF_4 hydrate (bulk tap density 3.4 g/cc) was produced.

3.3 Dehydration (L. E. McNeese)

Approximately 180 lb of UF_4 hydrate feed material for dehydration studies

[redacted]

ORNL-LR-DWG. 25344

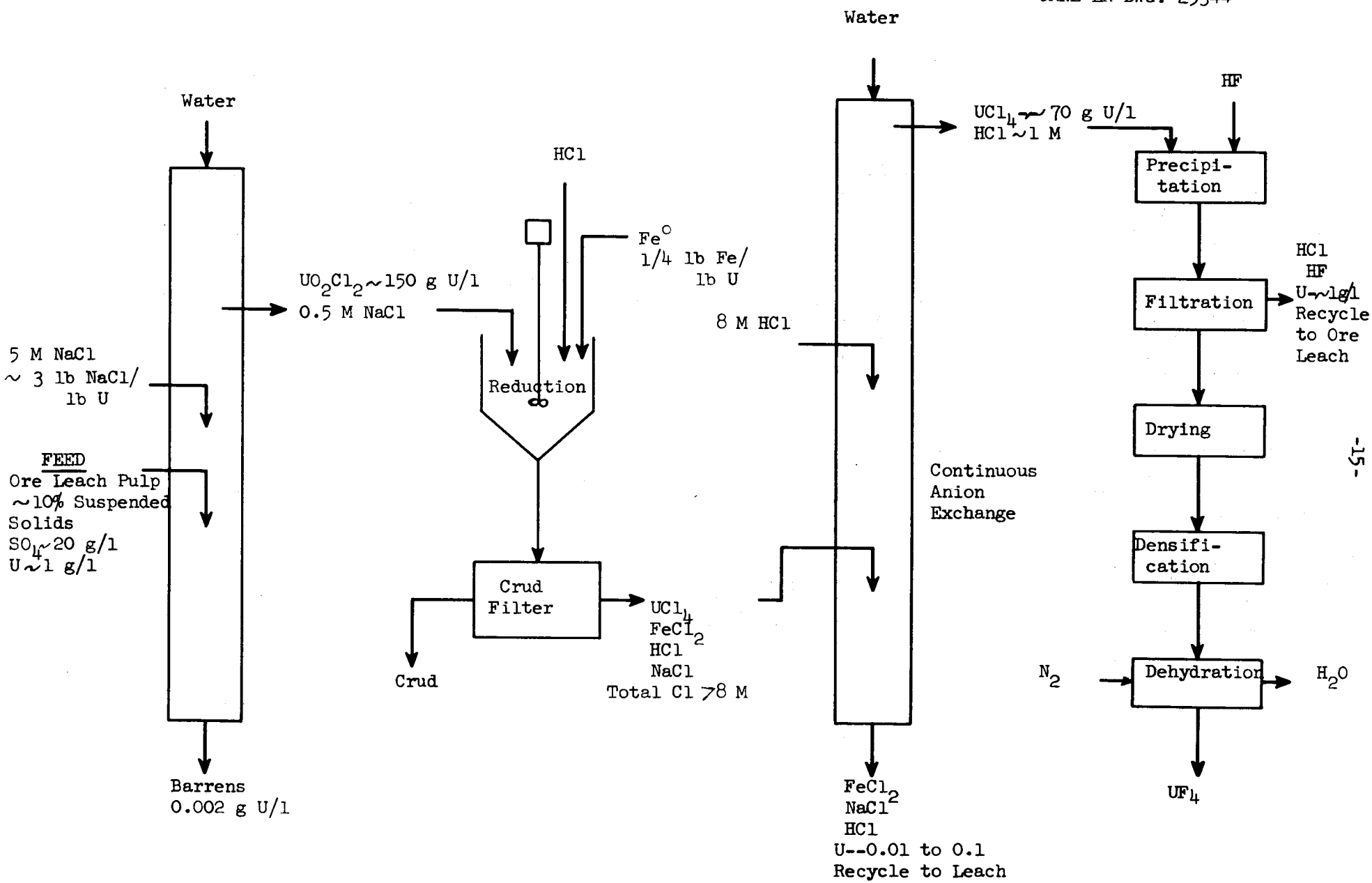

Fig. 3.1 Excer--Ore Mill--Iron Reduction--Chloride Flowsheet

[redacted]

[redacted]

ORNL-LR-DWG. 25345

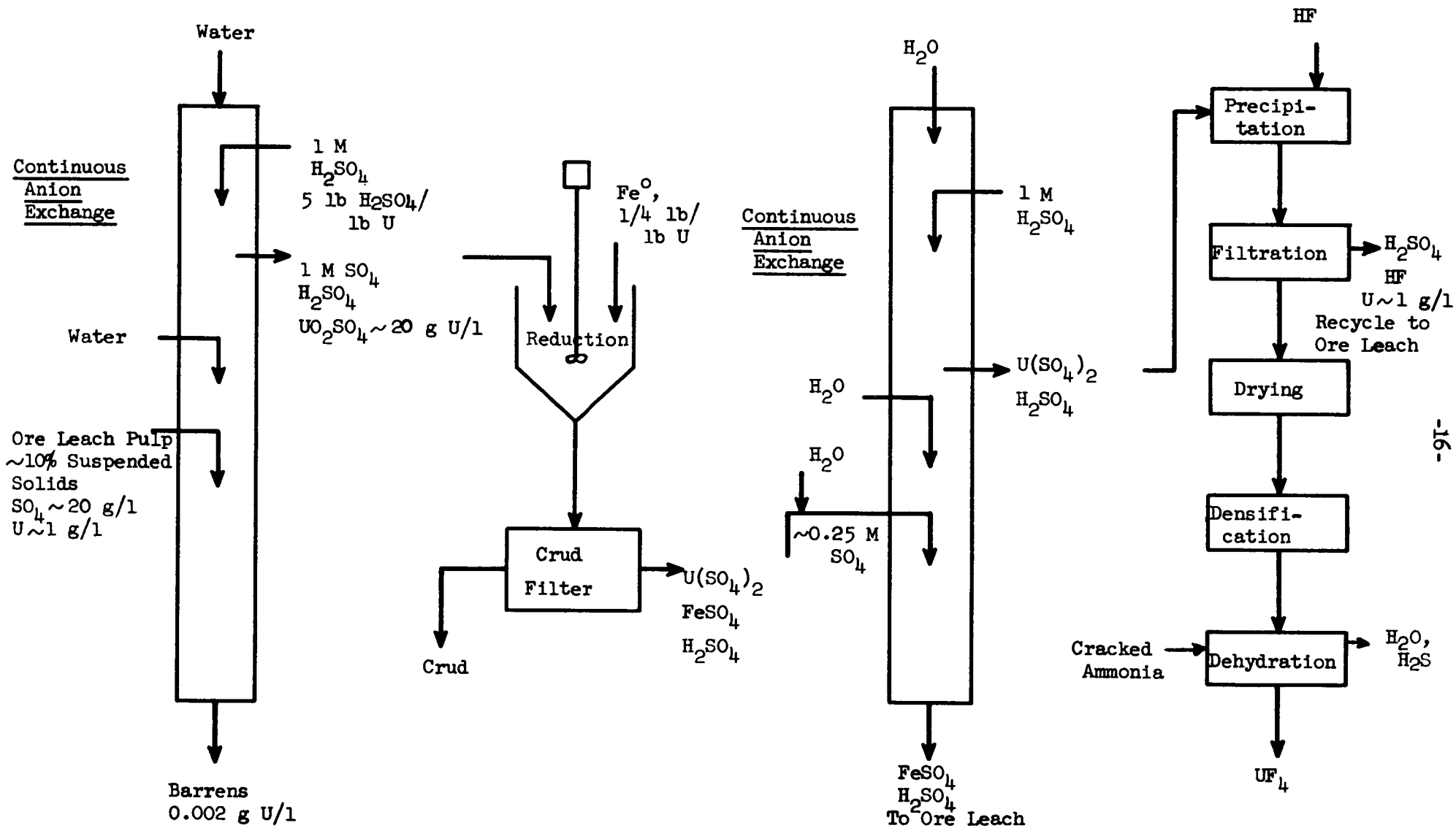

Fig. 3.2. Excer--Ore Mill--Iron Reduction--Sulfate Flowsheet

[redacted]

was prepared by slurrying dehydrated UF_4 with water, filtering, drying, tableting, grinding, and screening.

In two attempts made to operate the fluidized bed dehydrator as a continuous unit, binding of the screw in the feeding device necessitated shutdown. A new solids feeder in which nitrogen will be used to sweep the UF_4 hydrate into the bed was designed and is being fabricated.

Part II. HETEROGENEOUS POWER REACTOR FUEL REPROCESSING

4.0 HEAD-END TREATMENTS FOR SOLVENT EXTRACTION PROCESSING

Various head-end treatments are being investigated for preparing fuel elements with difficultly soluble components for solvent extraction. Processes for entire classes of fuels, rather than for individual fuels, are emphasized.

4.1 Zircex Process for Zirconium-containing Fuels (B. T. Gens, J. J. Perona, J. E. Savolainen)

The Zircex process for zirconium-containing fuels consists in chlorinating or hydrochlorinating the fuel to form volatile $ZrCl_4$, dissolving the residue, containing uranium chloride, in nitric acid, and removing or destroying the chloride by distillation prior to solvent extraction. The UCl_3 residue may also be processed further by the Hermex or Fused Salt--Fluoride Volatility process.

Decladding with HCl (B. T. Gens, J. J. Perona, J. E. Savolainen). The feasibility of dejacketing zircaloy-2-clad UO_2 fuel was demonstrated in several engineering-scale tests in which PWR blanket rods were hydrochlorinated at 600 and 725°C. At 600°C uranium losses were 0.005% to the sublimate and 0.002% as insolubles in 10 M HNO_3. All the zircaloy-2, including end caps, reacted in 1.5 hr. At 725°C losses were 0.08% to the sublimate and 0.006% as insolubles in a reaction time of 1 hr. In both runs about 10 g of powdered solids was recovered from the hydrochlorinator, along with the unreacted UO_2 pellets, indicating a chloride concentration of about 1% if the contents of the hydrochlorinator were put into solution at a uranium concentration of 300 g/liter. The choice of a material of construction for the dissolver may be difficult.

Chlorination (J. E. Savolainen). The processing of fuel elements by direct chlorination may be economical for some of the alloys which contain the more refractory metals, such as niobium, in combination with uranium and zirconium. The feasibility of a proposed method in which the chlorination is controlled by the rate of heat dissipation from the chlorinator was verified by a laboratory demonstration in which zircaloy-2 satisfactorily reacted with Cl_2 gas. If the heat is not removed, the zirconium tetrachloride formed remains in the vapor state at a pressure sufficiently great to prevent the passage of additional chlorine into the chlorinator.

A constant pressure chlorine gas feed system was connected to a closed nickel vessel containing zircaloy-2 rods, and the vessel was heated until reaction between the chlorine gas and the zirconium alloy started. The initiation of the reaction was observed immediately by the flow of chlorine gas into the chlorinator vessel. In 1 hr 47 g of zircaloy-2, as 1/8-in. rod, was chlorinated. An estimated 23 liters of chlorine gas was used; the calculated amount is about 24 liters. The tin from the zircaloy-2 formed $SnCl_4$ during the reaction, but this is not expected to condense as readily as the $ZrCl_4$. The reaction appeared to start at 300°C. Reaction initiation at lower temperature is probably prevented by an oxide layer on the surface of the metal.

Preparation of Pure HCl. In order to study the effects of impurities on the hydrochlorination system a source of pure hydrogen chloride gas is needed. HCl gas produced by dehydrating analytical grade hydrochloric acid with calcium chloride at about 100°C was dried further by passing over calcium chloride and then liquefied at the temperature of liquid nitrogen. The liquid hydrogen chloride was distilled through a bed of phosphorus pentoxide and again liquefied at liquid air temperature. The product was free of water and of the hydrocarbons which are present in the commercially available cylinder gas. In laboratory-scale equipment the HCl product contained 20 ppm of sulfur impurity.

Engineering Studies (A. R. Irvine). Problems of heat removal from the hydrochlorinator, of hydrogen-chlorine burning, and of disposing of the large volume waste from 1 ton of A-1-W Navy reactor blanket elements must be solved. As much as 1×10^6 Btu/hr must be removed from the hydrochlorinator of a 1-ton/day Zircex plant. Possible coolants for the hydrochlorinator are hot air and NaK, both of which have obvious disadvantages. The design of a hydrogen-chlorine burner for use in a radiochemical Zircex system is restricted as to size, capacity, ability to operate with varying feed rates and/or compositions, and completely remote operation. This unit process will receive further study. Medium- or low-activity-level wastes from Zircex processing of the Navy reactor blanket elements were calculated to be a minimum of 675 gal per ton of uranium. Assuming complete utilization of caustic and 100% saturation of the resultant NaCl solution, the volume of the solid wastes is expected to be about 450 gal/ton.

4.2 Alternate Aqueous Dissolution Studies (W. E. Clark, A. H. Kibbey)

Dissolution of Zircaloy-2 in $HF-HNO_3$. In order to obtain the dissolution rates of Zircaloy-2 in various mixtures of $HF-HNO_3-Zr(IV)$, 24 dissolution mixtures were prepared containing combinations of the following concentrations: 0.1 and 0.5 M HF; 4, 6, 8, and 13 M HNO_3; 0.1, 0.3, and 0.5 M Zr(IV). It was found impossible to prepare solutions containing 0.5 M HF and 0.5 M Zr(IV) at any HNO_3 concentration, or 0.5 M HF and 0.3 M Zr(IV) above 6 M HNO_3 because of zirconium precipitation.

At 90°C dissolution rates were practical only for the 0.5 M HF--0.1 M Zr(IV) mixtures (Fig. 4.1). With 0.5 M HF--0.3 M Zr(IV) and with 0.1 M HF--0.1 M Zr(IV) rates were less than 2 mg/cm^2. min, and all other dissolution rates were negligible. The F/Zr ratio therefore must be considerably above 1/1 to assure practical dissolution rates.

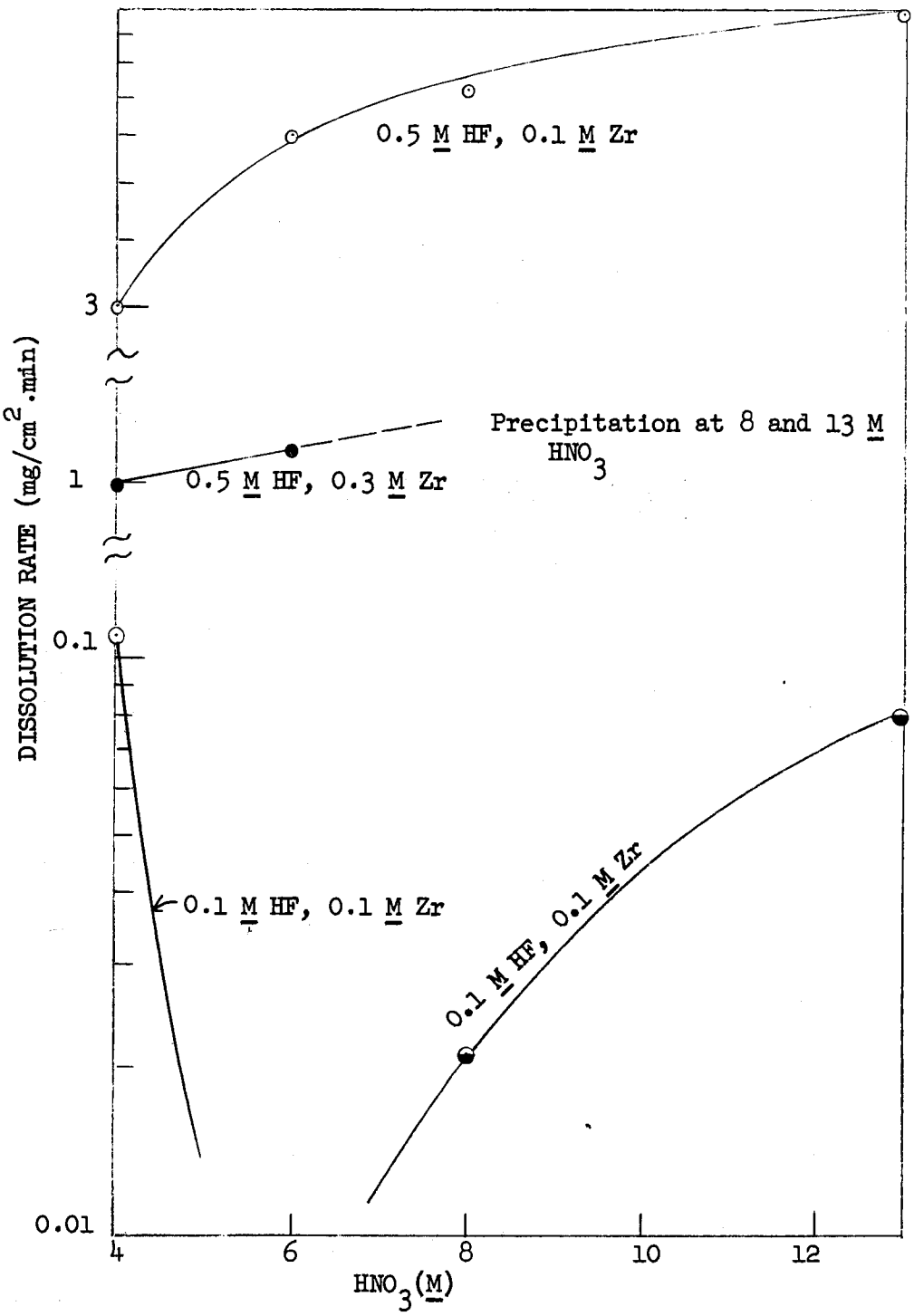

Fig. 4.1. Dissolution Rate of Zircaloy-2 in HF-HNO_3 Mixtures Containing Zr(IV).

In 2-hr dissolutions of zircaloy-2 in 13.1 M HNO_3--0.004 M HF at 90°C, zirconium precipitated at a concentration below 0.01 M:

Expt. No.	Zr in Final Solution (M)	F/Zr Ratio
1	0.0036	1.11
2	0.0027	1.5
3A*	0.00063	6.4
3B	0.0027	1.5
4A*	0.0075	0.54
4B	0.0091	0.44

*The metal specimens used in 3A and 4A were rinsed and reused in 3B and 4B, respectively.

Dissolution rates in most of the experiments were extremely low.

Dissolution of Zircaloy-2 and U-10% Nb in HF. Tests on dissolution of zircaloy-2 and U-10% Nb, at 25 and 90°C, indicate that 9 or 12 M HF should be satisfactory for the chemical decladding of zircaloy-2 clad U-10% Nb fuels, with the lower acid concentration preferable:

Material	HF (M)	Temp (°C)	Dissolution Time (min)	Dissolution Rate ($mg/cm^2 \cdot min$)
Zircaloy-2	9	25 to boiling*	1.5	284.3
	12	25 to boiling*	1.5	118.6
U-10% Nb	9	25	25	0.031
	12	90	30	0.083

*Temperature increased to boiling by the heat of reaction

Dissolution of U and U-10% Mo and APPR Fuel in Sulfuric Acid. In 2-min dissolutions at 100°C, uranium metal dissolved one tenth or less, as fast as U-10% Mo alloy:

H_2SO_4 (M)	Dissolution Rate ($mg/cm^2.min$) U	U-10% Mo
2	0.092	1.34
3	0.024	---
4	0.119	1.40
5	0.023	---
6	0.089	1.88
8	0.093	2.16

These data, particularly for uranium metal, are somewhat erratic; the experiment will be repeated.

In another analysis of the solids remaining after dissolution of an APPR fuel element in 4 M H_2SO_4 (ORNL-2362) the uranium loss was 6.7%. No obvious explanation of this anomalously high loss figure is available.

Sulfuric Acid Decladding Waste (J. H. Goode, J. R. Flanary). The dry, solid $CaSO_4$ cake produced by neutralization of 100 ml of 5.54 M H_2SO_4, containing 21.7 g Fe, 5.3 g of Cr, and 3.0 g of Ni per liter, obtained in sulfuric acid de-jacketing of Yankee Atomic fuel pins, with 40.7 g (0.55 mole) of $Ca(OH)_2$ was leached in 250 ml of distilled water for 60 days. Analysis of the leach solution, basic from excess $Ca(OH)_2$ and covered with a scum of $CaCO_3$, showed 0.42 mg Ca/ml, 0.310 mg SO_4/ml, and less than 2 ppm of Fe, Cr, and Ni. The experiment is being repeated with mixed fission products incorporated in the $CaSO_4$ cake.

Electrolytic Dissolution* In continuing studies of the dissolution of zircaloy-2-containing fuel elements in 3 M HCl--0.1 M HF, zirconium concentrations as high as 0.67 M were obtained, giving F/Zr ratios of approximately 0.15. Solid residues were not, however, completely eliminated at these fluoride concentrations, about 10% of the total zirconium being found in the anode sludge. Circulation of the dissolvent helped dissolve very finely divided metallic particles.

Preliminary experiments on UO_2 core material indicate that it can probably be made to dissolve in the 3 M HNO_3 used as dissolvent in the stainless steel dissolution work.

Short electrodissolutions indicated that the cell voltage drop is lower with a graphite anode than with platinum. The use of graphite may present a problem because of its relatively low mechanical strength.

4.3 Ion Exchange Studies (I. R. Higgins, W. J. Neill)

Ion exchange recovery of the small amount of uranium present in a zirconium-decladding solution would be simplified by prior removal of the zirconium. In tests on removal of the zirconium, as ZrO_2, from 1 M ZrF_4--1 M HF containing 1.7 g of uranium per liter by slowly increasing the pH of the solution, only about half the zirconium was removed:

*Work done by Carter Laboratories under subcontract.

Run No.	Decladding Solution Treatment	Type of Ppt	Zr Pptd (% of total)
1	Stoichiometric urea added and boiled 6.5 hr before pptn occurred	Granular	54
2	$(NH_4)_2CO_3$ added slowly at room temperature; pptn began when 67% of stoichiometric had been added	Gelatinous	53
3	60% of stoichiometric $(NH_4)_2CO_3$ added, with no pptn, and then sufficient urea added to neutralize remaining HF; pptn occurred after 1 hr boiling	Granular	52
4	10% excess $(NH_4)_2CO_3$ added slowly to boiling solution	Granular	16

The Zr/F ratios of the precipitates indicate the probability of some ZrF_4 and some $ZrOF_2$ in the precipitates:

Run No.	Concentration (wt %) Zr	F	NH_4	U	% of Total U
1	37.7	38.0	5.39	0.016	0.9
2	30.6	28.0	<0.05	0.073	4
3	27.6	28.3	<0.05	0.025	1
4	45.8	32.0	<0.05	0.010	0.23

The composition of the filtrates was:

Run No.	Concentration (g/liter) Zr	F	NH_4	U	H^+ (N)
1	15.9	18.0	3.32	0.493	0.82
2	19.9	25.1	<0.05	0.587	0.04
3	25.7	27.5	<0.05	0.670	0.11
4	35.3	22.8	<0.10	0.716	0.05

4.4 Corrosion Studies*

In cyclic Zircex hydrochlorination-dissolution tests, the attack of 5 M HNO_3--0.03 M UCl_3 on various alloys followed a consistent pattern although the amount of attack on a given material varied considerably from cycle to cycle (Fig. 4.2). For this reason it is planned to continue the tests on S-816 and Haynes-25 to 100 cycles, which corresponds approximately to four months of fairly continuous service. The general pattern of behavior was the same in the 3 M and 15 M HNO_3 tests in 5 M HNO_3--0.03 M Cl^-.

*Work done by Battelle Memorial Institute under subcontract.

[redacted] ORNL-LR-DWG. 25346

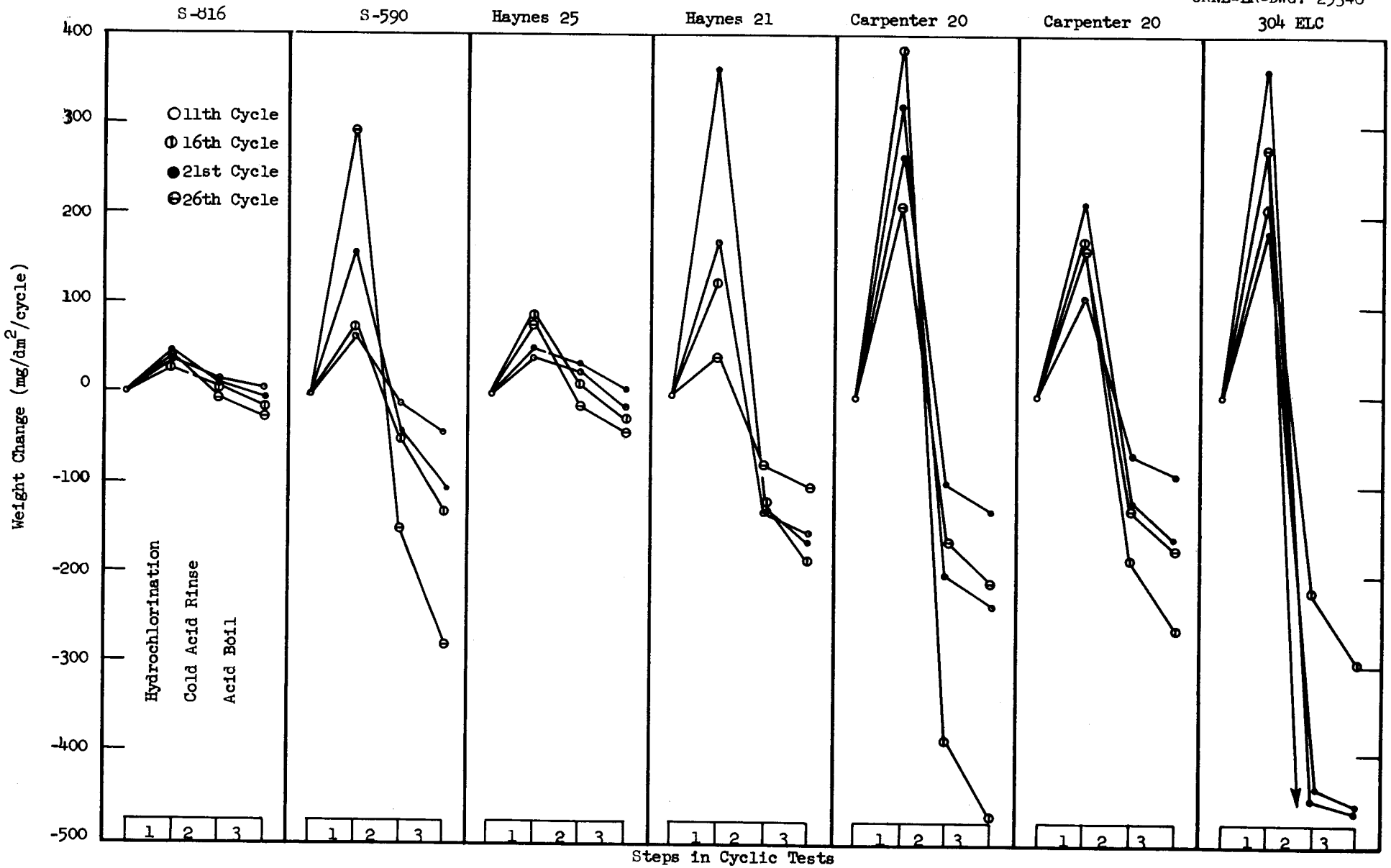

Fig. 4.2. Weight Changes in Cycles of Exposure to 5 M HNO_3--0.03 M UCl_3

5.0 SOLVENT EXTRACTION STUDIES
Program Leader: H. E. Goeller

the head-end treatments discussed in Sec. 4.0 are designed to produce solutions that can be subsequently extracted with TBP in existing or slightly modified Purex, Thorex, or 25 process flowsheets. The product solutions from the head-end development work are being extracted in experimental equipment to determine the usefulness of these flowsheets for the newer fuels.

5.1 Rural Cooperative Reactor Fuel (J. R. Flanary, J. H. Goode)

Batch countercurrent experiments indicated that many of the distribution coefficients for uranium, plutonium, and thorium obtained in batch equilibrations (ORNL-2385) were not valid under dynamic equilibrium conditions. In initial experiments, designed on the basis of low thorium distribution coefficients (~ 0.03) in a highly concentrated but stable feed (275 g Th/liter, 185 g U/liter, 2 M HNO_3), a third organic phase formed in the extraction section of the countercurrent apparatus when the feed was contacted with 2 vol of 30% TBP solvent and 0.2 volume of 3 M HNO_3 scrub. This flowsheet was expected to yield a Purex-type organic product from the extraction-scrub column (HAP), which could then be stripped and further processed in standard Purex equipment. Analysis of the third phase showed 90% to be the $Th(NO_3)_4 \cdot 4TBP$ complex plus smaller amounts of the $UO_2(NO_3)_2 \cdot 2TBP$ and $HNO_3 \cdot TBP$ complexes in $\sim$70% TBP.

Dilution of the feed and increase in the solvent volume resulted in the following workable, Thorex type co-decontamination flowsheet:

HAF/100 vol: 145 g Th/liter, 80 g U/liter, 2 M HNO_3, Pu α
HAS/200 vol: 3 M HNO_3
HAX/400 vol: 30% TBP

Anaylsis of individual stage samples indicated that losses of uranium and plutonium were less than 0.01% after 3 extraction stages, but that 0.34% of the thorium was in the aqueous raffinate after 5 stages.

5.2 Extraction Reagent Performance* (Program Leader: R. E. Blanco) (D. W. Sherwood)

Further vacuum fractionation of Amsco 125-82 has yielded what are believed to be several individual species. These are to be subjected to Co-60 radiation at ORNL and checked for decomposition products and the effect on decontamination factors.

More detailed vapor-phase chromatographic analysis of Amsco 125-82 indicates that as many as 17 components may be present in the diluent and that at least one of the major components contains 13 carbon atoms in an apparently highly branched chain.

*Work done at Georgia Institute of Technology under subcontract.

6.0 METAL RECOVERY PLANT
Program Leader: W. H. Lewis

(W. H. Lewis, J. L. Matherne, W. R. Whitson, C. D. Hylton, R. E. Brooksbank and P. A. Goudreau)

Approximately 9.5 tons of Paducah fluorinator ash is being processed in the Metal Recovery Plant to recover an estimated 120 g of Np-237 and 6.6 tons of depleted uranium. To date, about 3 tons of uranium and 30 g of neptunium have been recovered from 4 tons of ash.

The chemical flowsheet (Fig. 6.1) consists in (a) dissolution of ash in 1.8 M $Al(NO_3)_3$--1.0 M HNO_3 solution, (b) one cycle of solvent extraction, and (c) product concentration by evaporation.

6.1 Dissolution of Ash

Feed solution for solvent extraction was prepared by batch dissolution of ash in a 500-gal vessel. Approximately 160 kg of ash was dissolved in 1243 liters of 1.6 to 1.8 M $Al(NO_3)_3$--1.0 M HNO_3 solution. The dissolution of the ash was completed after 2-4 hr at a solution temperature of 100°C. After dissolution of ash was completed, the temperature of the solution was increased to the boiling point and the solution was digested, under full reflux, for 6-8 hr to coagulate the silica so that emulsions and column operational difficulties would be minimized. In some cases concentration by evaporation was performed during the digestion period to provide a 1.8 M $Al(NO_3)_3$ feed solution.

The amount of ash dissolved per unit of aluminum was increased by a factor of 1.5 over the amount used during the K-25 ash program. This change did not affect the recovery of neptunium by solvent extraction; however, laboratory study indicates that a further reduction in $Al(NO_3)_3$/ash ratio would probably cause a neptunium loss during solvent extraction because of uncomplexed fluoride ions.

6.2 Solvent Extraction

One cycle of solvent extraction—extraction, partitioning, and stripping—was used to recover the uranium and neptunium from the dissolver solution. In the extraction column the uranium and neptunium were extracted from the aqueous feed solution with 15% TBP-85% Amsco. Ferrous ion was added to the extraction-scrub stream to maintain a Np(IV) valence state and to promote neptunium extraction. The extractant/feed ratio was controlled to give a uranium solvent saturation of 50%. The separation of neptunium from uranium was accomplished in the partitioning column by controlling the concentration of nitric acid, thereby causing a transfer of the neptunium from the extractant to the aqueous partitioning solution. The uranium remained in the extractant and was stripped from the extractant in the stripping column with water. The average solvent extraction losses for the 20 days of continuous column operation were:

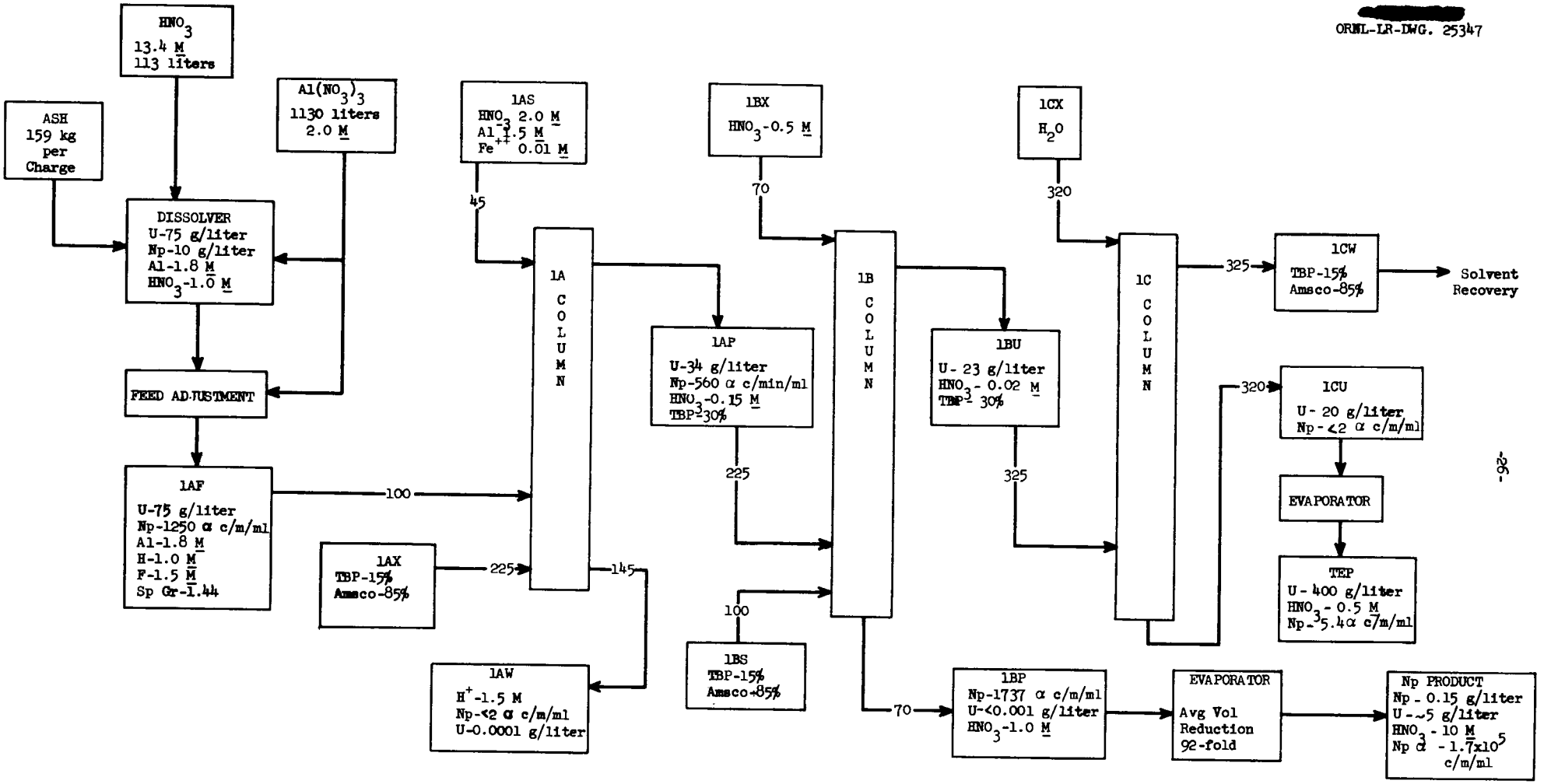

Fig. 6.1. Metal Recovery Plant Flowsheet for Recovery of Uranium and Np-237 from Fluorinator Ash.

Stream	Product Losses (% of IAF)	
	Neptunium	Uranium
1AW	0.28	0.001
1BP	-	0.001
1CU	1.45	-
1CW	-	0.031
Total	1.73	0.033

6.3 Product Concentration

The dilute uranium product from the stripping column (1CU) was concentrated by evaporation to 400 g of uranium per liter.

The neptunium product (1BP) from the partitioning column (1B) was concentrated 100-fold by evaporation and was removed from the system to await final purification by ion exchange or additional solvent extraction. Analyses of a typical neptunium product solution indicated that the solution contained:

Np-237	18.2 g
Io (Th-230)	6.4 g
Pu	0.7 g
Th	2950 g
U	3362 g

6.4 Thorium Extraction

The presence of excessive alpha activity in the neptunium product stream (1BP) led to the discovery that macro quantities of Io (Th-230) were being extracted and separated along with the neptunium. Analysis of the concentrated neptunium product solution for total thorium revealed that appreciable Th-232 was present. Therefore, no attempt will be made to recover the ionium.

7.0 THOREX PROCESS

Program Leader: E. M. Shank

In the Thorex process thorium and U-233 are separated from each other and from fission products and are recovered as aqueous solutions suitable for direct handling in processing to metal. Irradiated thorium is dissolved in excess nitric acid, concentrated to remove excess acid, and processed through two solvent extraction decontaminating cycles. The thorium and U-233 are extracted by tributyl phosphate in a kerosene-type diluent (Amsco) and costripped with dilute nitric acid in the first cycle, and are continuously concentrated and adjusted and are re-extracted and partitioned in a second cycle. The thorium product is continuously evaporated to 2 M and the U-233 is further purified and concentrated by ion exchange.

7.1 Pilot Plant Performance (E. M. Shank, J. R. Parrott, W. T. McDuffee, G. S. Sadowski, R. H. Vaughan, O. O. Yarbro, C. V. Ellison, J. F. Manneschmidt, Joe Cerny III, and L. B. Shappert)

Two pilot-plant development runs were completed. Run AWD-1 consisted of the reprocessing of the 1AW collected during the short-decayed scouting run HD-19. Run HD-26 consisted of the processing of 1000 g/t, 900-day decayed irradiated thorium; a total of 3890 kg of thorium was continuously processed through two solvent extraction cycles.

In run AWD-1, about 20 g of U-233 was recovered. Preliminary isotopic analyses indicated this material to be about 99.5% U-233. Solvent extraction losses totaled 0.6% with an overall material balance of 103%. The gross gamma decontamination factor for the uranium product was 2×10^3.

Totals of 3350 kg of irradiated and 540 kg of recycle thorium were processed in 620 hr of two-cycle operation in run HD-26. Continuous operation was maintained except in one 20-min power failure and one 12-hr interruption to acid-wash the 2C-column. A total of 3830 kg of thorium product was separated and 3130 g of U-233 was isolated; both products met activity and ionic specifications. Solvent used during run HD-26 was freshly prepared oleum-treated Amsco--42.5% TBP. Mercury-free dissolvings were routinely made without difficulty. Preliminary evaluation of the iodine scrubber was made using I-127 addition to the dissolver solution.

Average gross gamma decontamination factors in run HD-26 were 10^4 for thorium and 9.6×10^4 for uranium:

	First Cycle		Second Cycle		Overall	
Activity	Th 1AF/1CP	U 1AF/1CP	Th 2AF/2BT	U 2AF/IF	Th 1AF/2BT	U 1AF/IF
Gross γ	800	1000	20	140	1×10^4	9.6×10^4
Pa	1000	1000	10	1000	1×10^4	$\sim 1 \times 10^6$
Ru	1000	1000	~10	~10	5000	3×10^4
Nb-Zr	480	600	30	90	7600	8×10^4
TRE	1×10^4	2×10^4	10	~5000	$\sim 1 \times 10^5$	$\sim 1 \times 10^8$

Both the thorium and uranium products met tentative specifications:

	Activity (c/m/mg)				
	Gr γ	Pa γ	Ru γ	Zr-Nb γ	TRE β
Thorium					
1AF	10^5	4000	5000	$3x10^4$	$2x10^5$
1CP	150	4	5	50	20
2AF	200	6	5	60	20
2BT	10	<1	<1	2	2
Specs.	260	30	40	45	40
Uranium					
1AF	$1x10^8$	$3x10^6$	$5x10^6$	$4x10^7$	$4x10^8$
1CP	$1x10^5$	3000	5000	$7x10^4$	$2x10^4$
2AF	$2x10^5$	4000	5000	$7x10^4$	$2x10^4$
2CU	1400	~ 5	400	700	~ 4
Specs.	9000	1000	280	8000	450

Solvent extraction losses during run HD-26 averaged 0.7% for thorium and 0.15% for uranium. About 65% of the thorium loss was observed in the 1AW and about 93% of the uranium loss was observed in the 2BT.

Equipment performance during run 1AWD-1 was good. A minor modification was made in the 1AX head pot to permit flow of the 6% solvent into the 1A-column. Equipment performance during run HD-26 was also good except for the operation of the 2C-column, which had to be acid-washed to remove the gel-like deposits of thorium phosphate after about 400 hr of operation.

A study of the Fulflo filters installed on all nonradioactive process streams indicates a replacement frequency of about once in 3 days for organic streams and once in 10-14 days for aqueous streams. Initial evaluation of the iodine scrubber indicated it to be oversized by a factor of about 4, and the effective area of the plates was therefore reduced to 25% of that originally available.

Installation of the third uranium cycle equipment was completed and the equipment was cleaned with detergent and rinsed with water. Initial operation of the system with synthetic solutions indicated satisfactory performance of all equipment pieces.

Optimization of the hydroclone operation in the solvent recovery system was completed. Addition of water to the hydroclone feed increases the concentration of water dispersed in the organic phase and decreases the quality of the solvent

overflow. Under all operating conditions, with or without water, the hydroclone showed a decontamination factor of 1 to 3. Performance of the 1-gal/min hydroclone was better than that of the 0.5-gal/min on the basis of water separation, decontamination factors, and steady performance for the same pressure drop.

7.2 Plant Modifications (W. R. Winsbro, W. T. McCarley, R. J. McNamee, R. J. Foltz)

Design of the IAWC facility was completed and installation is about 90% complete. All critical piping materials were acceptable by ASTM standards under the corrosion and mechanical soundness test except for special 1/2-in. metal-arc butt-welded transfer jets. These welds showed excessive porosity under radiography and this was corrected by removing the existing weld deposit and rewelding by the heli-arc process. The mechanical soundness of the materials was determined by either ultrasound or radiography and Zyglo testing.

Design of the additional 5000-gal thorium nitrate storage vessel and installation of the third uranium cycle, the iodine removal system, and the sample conveyor was completed. Installation of the interface purge system is 90% complete.

8.0 WASTE STUDIES

Program Leader: J. O. Blomeke

(I. R. Higgins)

Alkaline treatment of ORNL waste is being studied. At the present time these wastes are stored in ground surface pits. Naturally occurring Conasauga shale possesses sufficient ion exchange capacity to sorb all the fission products except ruthenium, but the ruthenium, together with the nitrate ions, escapes directly to the ground water and may eventually contaminate the environment.

In the new process (Fig. 8.1) waste, at a rate of about 5,000 gal/day would be sent to either a continuous ion exchange contactor or a shale-filled pit where cesium, strontium, and the rare earths would be removed. Data show that a 6-in.-dia column would be required. Based on recent determinations by the Health Physics Division, approximately 35 yd^3 of shale per year would be required as an alternative.

For the removal of nitrate and ruthenium, two types of electrolytic cells are being considered. An acid-base cell using anion- and cation-exchange membranes would require about 35 ft^2 each of electrode area* and a 60-kw power supply. A nitrate reduction cell would be simpler in construction, not requiring membranes and compartments, but possessing a total of about 280 ft^2 of electrode area* and a 500-kw power supply. The latter cell may be somewhat more efficient for ruthenium plating. On the other hand, if ruthenium removal only is desired without nitrate or caustic destruction or recovery, a much simplified electrolytic cell may be used.

*These are a factor of 10 less than the sizes given in ORNL-2385, Sec. 9.0, where extremely preliminary results are given.

[redacted]

ORNL-LR-DWG. 25348

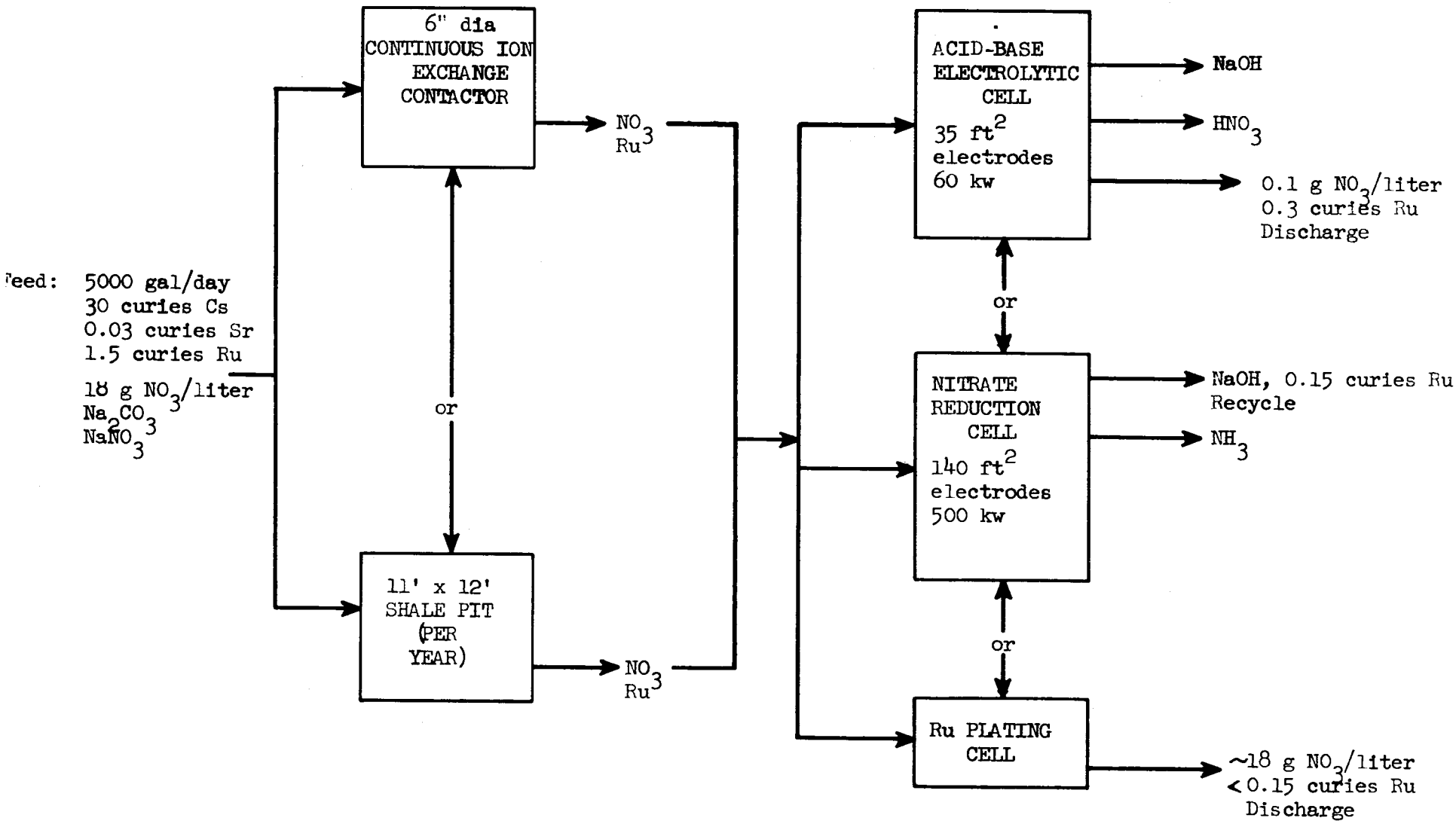

Fig. 8.1. ORNL Waste Treatment Flowsheet.

Considerably more laboratory work will be required before the final flowsheet conditions and equipment may be chosen.

9.0 AMERICIUM RECOVERY

Nitrate solutions from Los Alamos (Table 9.1) containing approximately 40 of Am-241 contaminated with large amounts of other cations are being processed. Because of the large amounts of lanthanum and cerium, americium recovery by ion exchange* would require at least 800 liters of resin and large eluant volumes, difficult to handle in a laboratory operation. Therefore solvent extraction methods that can be used in existing pilot plant equipment are being investigated. Distribution coefficients for lanthanum and americium between tributyl phosphate and nitrate solutions were determined experimentally, and proposed separation methods were tested by batch extractions.

Table 9.1. Composition of Americium Solutions

Drum No.	Vol (gal)	Activity (c/m/ml) Am	Activity (c/m/ml) Pu	H^+ (N)	Ionic Analyses (mg/ml) Al	Cr	Fe	U	Spectrographic Analyses (mg/ml) Ca	Ce	La	Mg	Y
1	25	5.6×10^8	1.1×10^7	2.79	18.4	0.089	1.28	0.018	26.5	33.5	65.0	0.60	0.07
2	25	6.0×10^8	1.1×10^7	2.81	16.6	0.097	1.13	0.019	22.5	30.5	59.5	0.50	0.06
3	22	5.4×10^8	9.7×10^6	2.63	17.3	0.098	1.13	0.018	27.0	34.5	69.5	0.85	0.07

9.1 Distribution Coefficients from Neutral Nitrate Solutions

Results of batch equilibrations (Fig. 9.1) indicated that large volumes of dilute tributyl phosphate would be required for complete La extraction from the Los Alamos solutions, but small volumes of 100% TBP can be used. The aqueous solution used in the equilibrations was a synthetic neutralized Los Alamos solution. In the Hanford slag and crucible waste solutions processed by ion exchange**, lanthanum concentrations were much less than 1 mg/ml.

As the lanthanum concentration increased, the plot of the log of the lanthanum distribution coefficient vs log concentration approached a straight line with a slope of -1. (Fig. 9.2). This is due to the approach to lanthanum saturation in the organic phase, which is about 120 g/liter in 100% TBP. These experiments were carried out by equilibrating equal volumes of tributyl phosphate with aqueous solutions containing 1 M $Al(NO_3)_3$, 2.5 M $NaNO_3$, and various amounts of $La(NO_3)_3$ plus La-140 tracer. Distribution data for lanthanum concentrations < 1 g/liter were erratic and are not reported.

*D. O. Campbell, "The Isolation and Purification of Americium," ORNL-1855 (March 27, 1956).

**R. E. Brooksbank, J. L. Matherne, and W. R. Whitson, "Terminal Report on the Recovery of Plutonium and Americium from Hanford Metallurgical Waste in the ORNL Metal Recovery Plant," ORNL-1850 (Feb. 16, 1955).

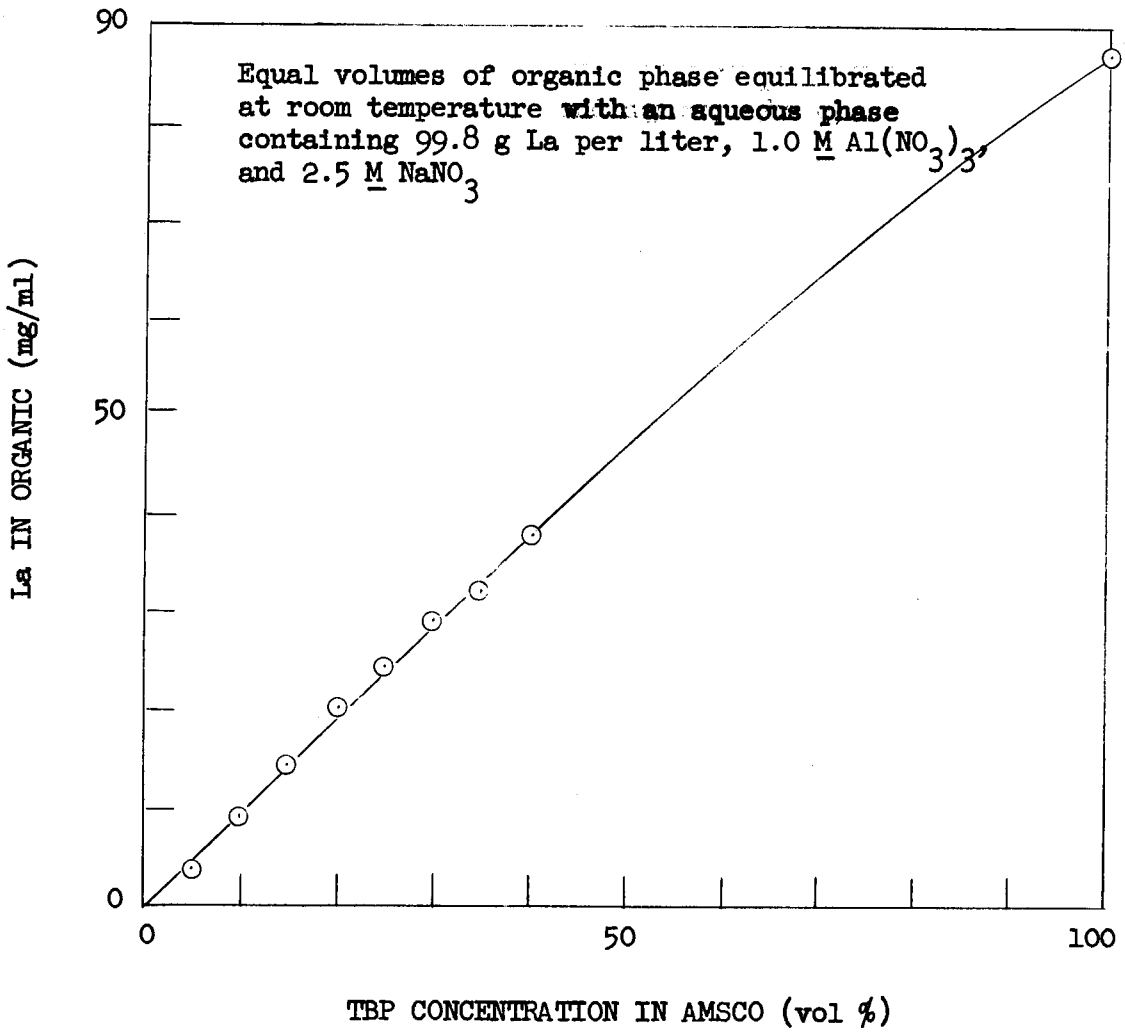

Fig. 9.1. Lanthanum Extraction by Tributyl Phosphate

[redacted]

ORNL-LR-DWG. 25349

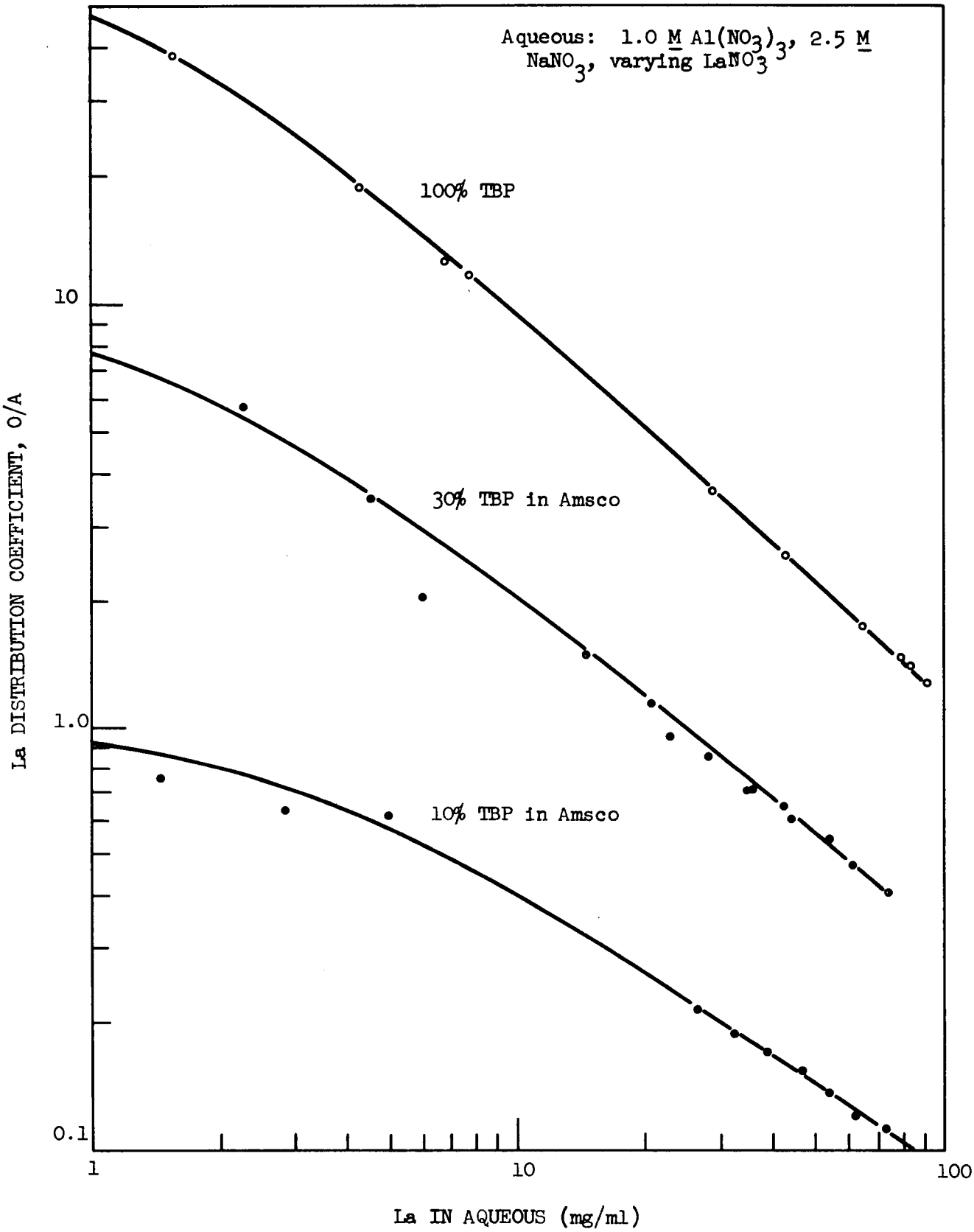

Fig. 9.2. Lanthanum Distribution Coefficient vs. Lanthanum Concentration

Owing to the limited glove box space available, americium distribution coefficients were not determined for these conditions. They are probably 1.5 to 2 times those of lanthanum. A single determination with lanthanum nitrate and americium tracer in the aqueous phase and 100% TBP showed a lanthanum distribution coefficient of 15, and an americium distribution coefficient of 26.5. At equilibrium, the lanthanum concentration in the aqueous phase was 3.32 g/liter.

9.2 Distribution Coefficients from Concentrated Nitric Acid

Americium and lanthanum distribution coefficients decreased rapidly with slight increase of acidity near the neutral point (Fig. 9.3); however, at high nitric acid concentrations, the distribution coefficients increased with acidity. Distribution coefficients were obtained by contacting equal volumes of aqueous solution containing approximately 50 g/liter La and 50 mg/liter Am and 7.5-17.2 M HNO_3 with tributyl phosphate. However, the americium distribution coefficient increased more rapidly, thus resulting in better separation at higher acidities. The separation factor of 10 at 17.2 N HNO_3 makes separation by solvent extraction quite feasible.

9.3 Batch Countercurrent Extraction Tests

Preliminary flowsheets based on the above distribution data were tested in batch countercurrent runs. The proposed flowsheet requires an extraction column, a partitioning column, and a stripping column. Both americium and lanthanum are extracted into 100% TBP from neutral nitrate solutions in the extraction column. Nitric acid concentrations in the partitioning column are high, so that lanthanum is back-extracted to the aqueous phase but americium is kept in the organic phase. Water is used in the stripping column to remove acid, americium, and the remaining lanthanum. Conditions and results of the countercurrent runs are summarized in Tables 9.2-9.5.

Americium was not used in any of these runs; however, americium tracer was added to each stage of the second partitioning column run (Table 9.4) after equilibrium was reached in order to obtain distribution coefficients. Lanthanum analyses were made by counting La-140 tracer.

In the extraction column (Table 9.2) with only two stages, the lanthanum loss was 0.04%.

In the first partitioning column run (Table 9.3), all the acid was added at the top and the bottom of the column. About 15% of the lanthanum was carried in the organic phase. In the second run (Table 9.4), lanthanum carryover was decreased to 0.93% by decreasing the acidity in the aqueous scrub. An acid butt was added to the same plate as the organic feed in order to maintain high americium distribution coefficients in the bottom of the column. Expected americium recovery calculated from the measured distribution coefficients is 99.96%.

Lanthanum loss in the stripping column (Table 9.5) was 1.3%; however, this may be in error because of the low concentration. This can be readily decreased by increasing the volume of aqueous strip.

UNCLASSIFIED
ORNL-LR-DWG 24625

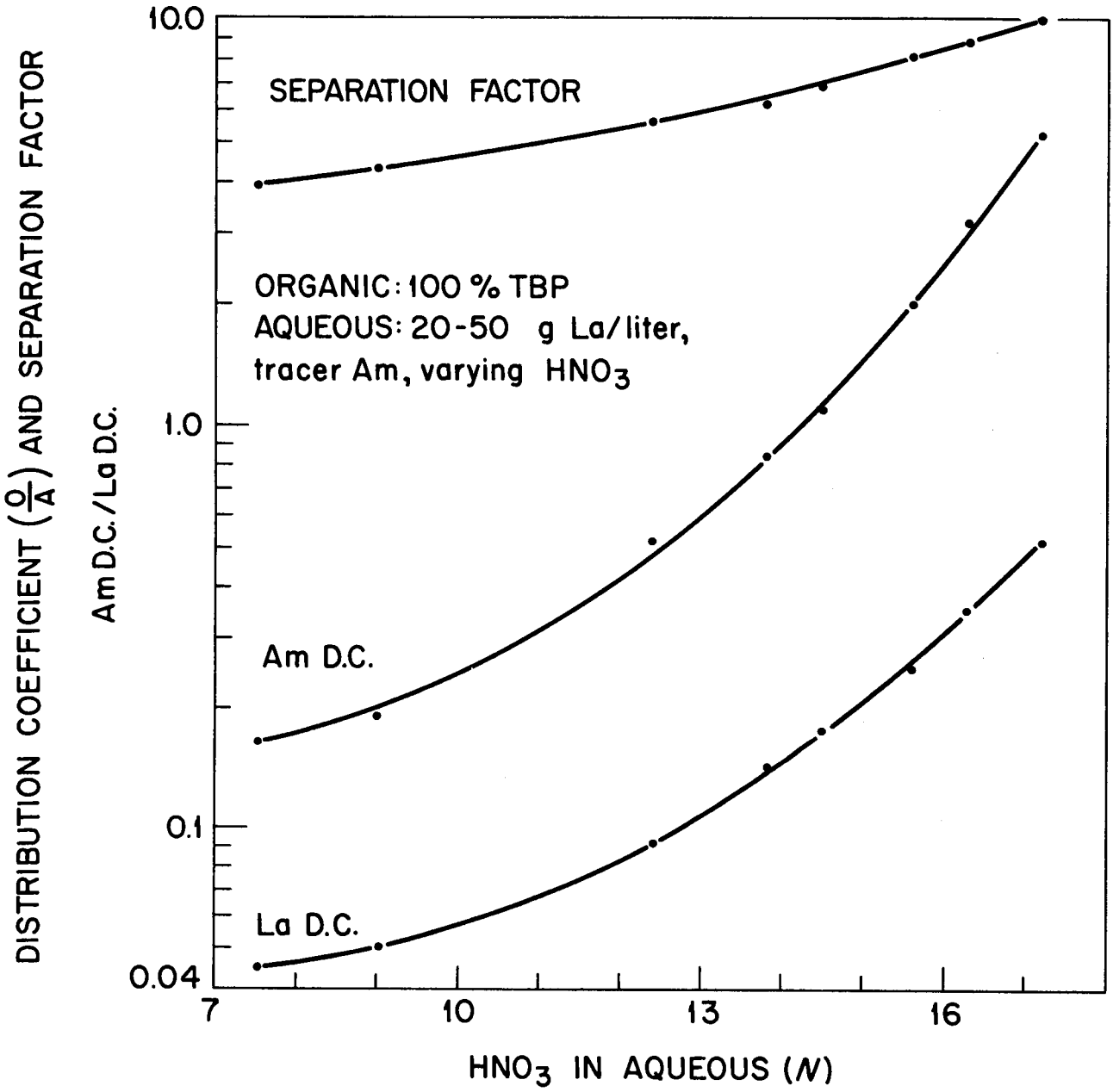

FIG. 9.3

LANTHANUM AND AMERICIUM DISTRIBUTION COEFFICIENTS AS A FUNCTION OF ACIDITY

Table 9.2. Extraction Column

Entering and Exit Streams				Stage Equilibrium Data	
Stream	Composition	Vol (ml)	Stage	Aqueous Phase La, g/l	La D.C. (O/A)
Organic product	49.8 mg/ml La	70			
Aqueous feed	1 M $Al(NO_3)_3$ 2.5 M $NaNO_3$ 100 mg/ml La	35	1	2.23	22.3
Aqueous waste	1 M $Al(NO_3)_3$ 2.5 M $NaNO_3$ 0.04 mg/ml La	35	2	0.04	248
Organic Extractant	100% TBP	70			

Table 9.3. Am-La Partitioning Column, First Run

Entering and Exit Streams				Stage Equilibrium Data			
				Aqueous Phase		Distribution Coefficient, O/A	
Stream	Composition	Vol (ml)	Stage	HNO_3 (M)	La (mg/ml)	HNO_3	La
Organic product	7.85 N HNO_3 1.93 mg/ml La	~ 60	1	17.8	2.37	0.441	0.82
Aqueous scrub	18 N HNO_3	45	2	17.5	5.00	0.437	0.69
			3	17.2	7.80	0.422	0.61
			4	16.7	13.0	0.413	0.51
Organic feed	49.8 mg/ml La	15	5	15.3	31.8	0.405	0.32
			6	15.5	27.8	0.403	0.34
			7	15.4	27.4	0.406	0.32
			8	15.2	29.1	0.408	0.29
			9	15.1	26.0	0.404	0.31
Aqueous waste	15.7 N HNO_3 16.6 mg/ml La	~ 45	10	15.7	16.6	0.398	0.37
Organic scrub	6.4 N HNO_3	45					

Table 9.4. Am-La Partitioning Column, Second Run

Entering and Exit Streams				Stage Equilibrium Data						
				Aqueous Phase		Vol (ml)		Dist. Coeff., O/A		
Stream	Composition	Vol (ml)	Stage	HNO_3 (N)	La(mg/ml)	A	O	HNO_3	La	Am
Organic product	6.10 N HNO_3 0.101 mg/ml La	59								
Aqueous scrub	15.6 N HNO_3	45	1	15.5	0.417	45	59	0.394	0.24	2.36
			2	15.4	1.69	48	57	0.396	0.24	2.00
			3	15.7	4.91	48	58	0.395	0.26	1.80
Organic feed	49.8 mg/ml La	15	4	16.0	11.50	54	63	0.413	0.35	2.72
Aqueous acid butt	20.9 N HNO_3	30	5	17.1	14.56	76	70	0.439	0.63	4.38
			6	17.0	14.38	75	47	0.441	0.56	4.96
			7	17.0	13.84	75	46	0.441	0.59	4.67
			8	16.7	13.01	73	45	0.443	0.51	4.60
Aqueous waste	16.8 N HNO_3 8.49 mg/ml La	74	9	16.7	11.33	74	44	0.437	0.48	4.24
			10	16.8	8.49	74	44	0.435	0.48	4.03
Organic scrub	6.4 N HNO_3	45								

Table 9.5. Stripping Column

Entering and Exit Streams				Stage Equilibrium Data			
				Aqueous Phase		Dist. Coeff., O/A	
Stream	Composition	Vol (ml)	Stage	HNO_3 (N)	La (mg/ml)	HNO_3	La
Organic waste	1.90 N HNO_3 0.026[a] mg/ml La	~49					
Aqueous strip	H_2O	30	1	2.90	0.180[a]	0.655	0.145[a]
Aqueous product	9.70 N HNO_3 2.57 mg/ml La	~38	2	9.70	2.57	0.386	0.0467
Organic feed	7.85 N HNO_3 1.93 mg/ml La	60					

[a]Values may be in error because of low concentration.

10.0 NONAQUEOUS PROCESSES

Nonaqueous processing methods are being investigated in an attempt to find cheaper and more operable methods for recovering source and fissionable materials from reactor fuels.

10.1 Hermex Process (O. C. Dean, C. P. Johnston; Program Leader: O. C. Dean)

The Hermex process is a zero-valence-state process for recovering and decontaminating uranium from scrap metal or alloys. The uranium is dissolved in boiling mercury and separated by filtering, pressing, and retorting.

The use of a stainless steel rather than a glass dissolver reduced the nonrecoverable uranium loss by a factor of 20, from 24% to 1.2%. Planned modifications in technique and equipment are expected to further reduce this loss due to oxidation. A reduction from 55 to 7 μ in the effective porosity of the filter at 356°C had little effect on the amount of uranium held-up in the dissolver.

Material balances have improved, but the fission product activity balances remain unsatisfactory. Although most of the activity balances are low (60-75%), Zr γ and Nb γ balances are invariably high, 120-10,000%. Analytical studies are underway to improve this situation. The low activity balances are largely due to volatility losses and losses in a small, aqua regia--insoluble residue adhering to the dissolvers. Decontamination factors for the uranium quasi amalgam in glass apparatus ranged from 2.2 for TRE β to 18 for gross γ. Decontamination factors for the most recent run in glass are estimated to be about three times as great.

10.2 Fused Salt--Fluoride Volatility Process (Program Leader: R. B. Lindauer)

Pilot Plant Studies (W. H. Lewis, J. T. Long, J. E. Bigelow, F. N. Browder, W. H. Carr, R. B. Keely, S. Mann, F. W. Miles, S. H. Stainker, C. L. Whitmarsh). Absorber studies started last month were completed. Cooling the absorber during absorption held absorption losses to less than 1%; absorption losses are recoverable. A center tube was used in these runs to reduce the time required for heating. More than 15 kg of uranium (1.5 flowsheet batches) can be absorbed prior to breakthrough if HF has been removed from the fluorine.

The snow trap was altered to permit the use of sodium fluoride for absorbing zirconium and chromium.

Six of a series of seven flowsheet runs were completed. Preliminary information indicates that a fluorine flow rate of 10-18 std liters/min is the optimum fluorination rate. The sodium fluoride in the snow trap is removing some chromium and zirconium.

In an effort to reduce valve seat leakage in the present metal-to-metal

seat valves, Kel-F disks were experimentally installed in five valves. The three 1/2-in. valves with Kel-F disks appear to seal satisfactorily; however, the two 1-in. valves leak excessively.

An HF trap (filled with sodium fluoride) was installed in the fluorine supply line and is being used for the last two of the seven runs in order to remove as much HF as possible. Heating equipment required for proper operation and for regeneration of the trap has not yet been installed.

Fused Salt--HF Dissolution (M. E. Whatley, S. H. Stainker, G. Jones, Jr.). Design of the STR fuel element dissolution facility is complete, but changes and simplications will be made in the proposed method of operation. Construction of the facility is now about 75% complete.

The difficulty of obtaining copper forms in ASTM specification grades and the critical copper-copper weld at the bottom of the dissolver liner have caused construction delays. A nonporous weld has not yet been achieved, but suggested revisions in technique are expected to produce an acceptable weld.

Laboratory Tests (G. I. Cathers, M. R. Bennett). The equilibrium concentration of uranium in equimolecular $NaF-ZrF_4$ was less than 50 ppm after the molten salt had been contacted at 600°C with UF_6-F_2 gas mixtures over the UF_6 partial pressure range 0.01-250 mm. This level of uranium probably reflects the salt sampling technique and poor analytical accuracy rather than true equilibrium. It is believed that the true equilibrium values are much smaller. Results indicate that a molten salt scrub step would be feasible in a volatility process as a means of achieving additional decontamination without appreciable uranium loss.

In preliminary studies, fluorine gas at measured rates was passed through a 4-in. length bed of $3NaF.UF_6$ complex at a known temperature. The resulting F_2-UF_6 gas mixture was then passed through a nickel reactor containing 50 g of molten $NaF-ZrF_4$ (50-50 mole %) at 600°C. Samples of the molten salt were taken periodically by the cold dip-rod method to determine changes in uranium concentration. Partial pressures of UF_6 in F_2 were higher when the temperature of the bed was raised. No attempt was made to analyze the off-gas F_2/UF_6 ratios in the earlier runs. In later runs, at UF_6 pressures greater than 10 mm, the off-gas was analyzed by connecting a gas trap of known volume and hydrolyzing the UF_6. At UF_6 pressures of approximately 100 mm and above, difficulty was encountered in using the bed complex as a UF_6 source owing to depletion of the bed and temperature effects; therefore, the bed was replaced by a nickel reactor containing solid UF_6 alone as the saturating source. Samples of the molten salt were taken at 15-min intervals in the equilibration tests. In sampling, the salt had to be brought out of the reactor so that it was in contact with the UF_6-F_2 gas mixtures. Calculation showed that absorption of the UF_6 on the outer surface of the cold salt was probably the reason for the small amount of uranium always detected.

High Activity Level Volatility Laboratory (R. P. Milford). Installation of instruments began July 15 as scheduled and the pipe fitting was completed. Structural supports for the vessels and cell equipment were fabricated and are now being installed.

Arrangements are being made to irradiate 12 PWR blanket fuel rods in the MTR to 10,000 Mwd/ton. Permission to use one of the EBR charging machines for shipment of the irradiated rods to Oak Ridge from Idaho Falls was granted by D. G. Reid of Phillips Petroleum Company.

Part III. HOMOGENEOUS REACTOR FUEL AND BLANKET PROCESSING AND DEVELOPMENT

Program Leader: D. E. Ferguson

11.0 HRT CHEMICAL PLANT

(W. D. Burch, W. L. Albrecht, N. C. Bradley, R. H. Winget)

11.1 Craft Maintenance.

To obviate the necessity for freezing 4.0 M H_2SO_4 (f.p. ~ -50°F) in order to transfer solution outside the cell from the decay tanks, the piping below the decay tanks was revamped. Thirty freeze coils and connecting risers to the top of the cell were installed for isolating equipment during replacement with the cell flooded. The entire secondary refrigeration system was leak-tested and leaks were repaired. No leaks were found in cell C, but numerous soldered joints in the service cell leaked. All insulation cans were refilled. The Sant-O-Cel (silica aerogel) had settled, leaving nearly half the lines exposed.

11.2 Remote Maintenance Demonstrations.

Approximately half the 30 pieces of equipment designed to be replaceable can be grouped with other pieces for which maintenance is similar or identical. Thus it is necessary to actually demonstrate that about 15 separate items can be removed and replaced by the methods proposed. All were practiced with the cell not flooded. Minor revisions to equipment supports, alignment mechanisms, etc., were required, but none of the jobs proved unfeasible. As expected, aligning the flanges and making them leak-tight upon replacement proved to be the most difficult aspect. One flange on the high-pressure heater was damaged and had to be lapped prior to resealing.

11.3 Charcoal Bed Breakthrough Tests.

Owing to the extremely adverse effects of a void or channel in one of the off-gas charcoal beds, a "breakthrough" test was recommended to ascertain the physical condition of each of the four beds. The beds are now being dried and leak-checked. In the test a burst of active krypton will be injected into each bed, and normal flows of oxygen purge will be maintained until the activity is removed from the bed as indicated by an end-window Geiger tube by which the exit gas is passed. If no voids exist in the bed, the first activity should breakthrough in one to two weeks. If there are voids the breakthrough will occur in much less time.

12.0 URANYL SULFATE FUEL PROCESSING

12.1 Rare Gas Adsorption

Dynamic Studies (R. A. McNees, R. E. Adams*, W. E. Browning*, J. F. Krause*, D. E. Guss*). The study of holdup by adsorption of krypton and xenon

*Solid States Division.

on activated charcoal has been continued and additional experimental data on the behavior of xenon have been obtained. Xenon was adsorbed on charcoal more strongly than krypton at all temperatures studied (Fig. 12.1), and the xenon adsorption coefficient was more temperature dependent than that of krypton (Fig. 12.2). Characteristic charcoal trap constants are compared in Table 12.1.

Testing of the HRT charcoal beds is underway with a 20 mc pulse of Kr-85 having been injected into each of two beds on August 15. With an oxygen flow rate of 500 cc/min through each bed, no breakthrough had been noted after 12 days. The tests will be continued until breakthrough occurs, after which the other two beds will be tested.

A newly designed counter tube holder was constructed so that the end window of the tube forms one wall of the totally enclosed holder. Thus the counting efficiency of the system has been increased and the disposal of the radioactive gas facilitated. A proportional counter has also been installed so that more highly radioactive rare gases may be used.

Table 12.1 Xenon Adsorption on HRT Charcoal[a]

Trap 1: 3/4 in. i.d. x 71 in. glass pipe; 247.2 g charcoal; 5.5% moisture

Trap 2: 3/4 in. o.d. x 118 in. aluminum pipe; 318.9 g charcoal; 1.9% moisture

Trap	Temp (°C)	Ratio		k		N	
		t_b	t_{max}	Xe	Kr	Xe	Kr
1	27	16.4	16.5	779	47	26	34.5
	29	17.4	17.3	868	50	36.3	36.3
	100 ± 5	7.6	7.9	88	11[b]	113	150[b]
2	29	17.7	18.6	828	44	151	151
	100 ± 0.5	7.5	7.9	88	11[b]	112	150[b]

[a]Definitions:

t_b = time when activity appears in effluent gas

t_{max} = time when activity is at a maximum in effluent gas

k = measure of adsorptive capacity of charcoal

N = number of theoretical chambers in trap

Ratio = t_b and t_{max} of xenon as compared to values for krypton

[b]Approximate values because of short elution time and small amount of Kr-85 activity.

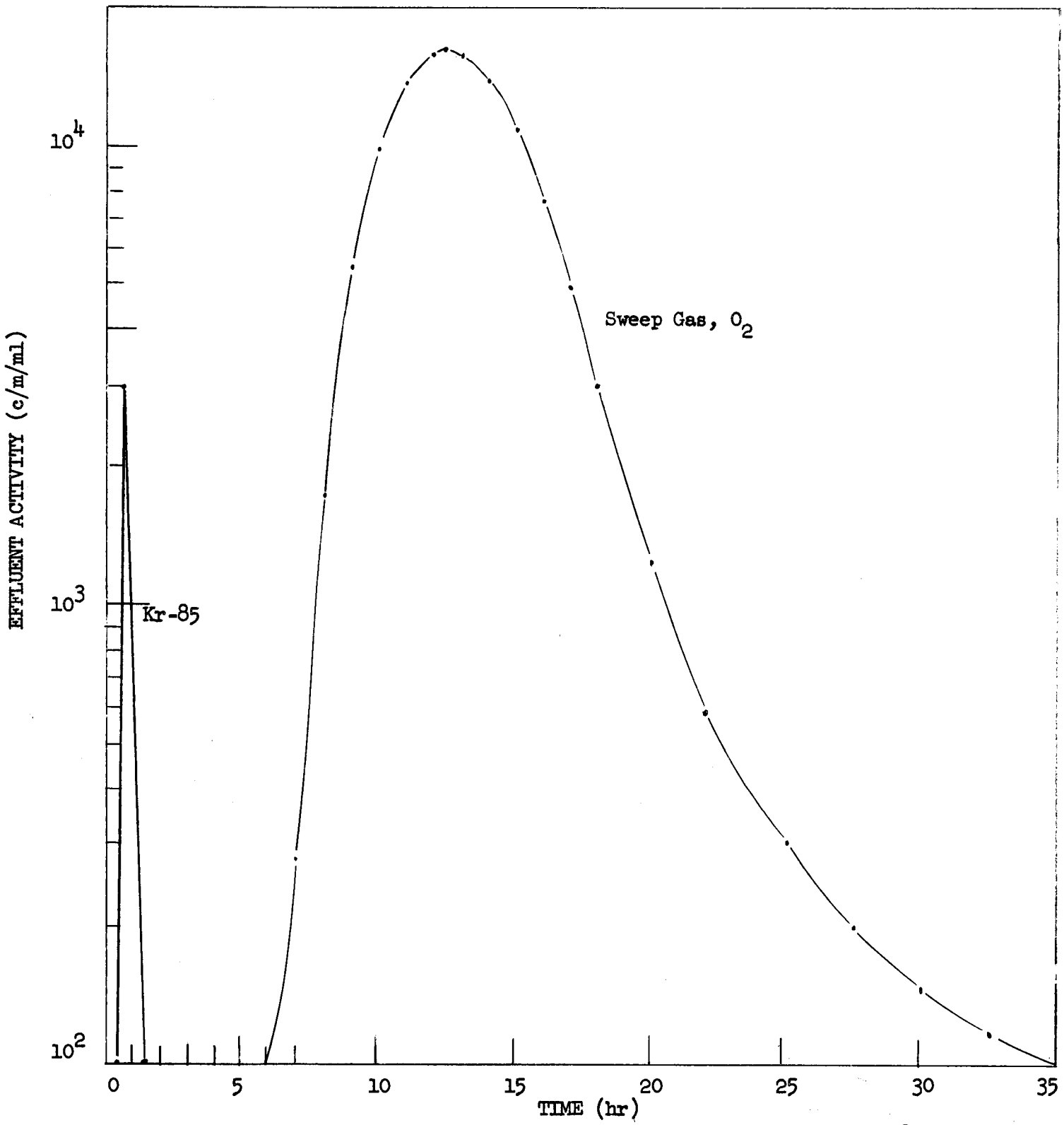

Fig. 12.1. Adsorption of Xe-133 and Kr-85 on HRT Charcoal at 25°C.

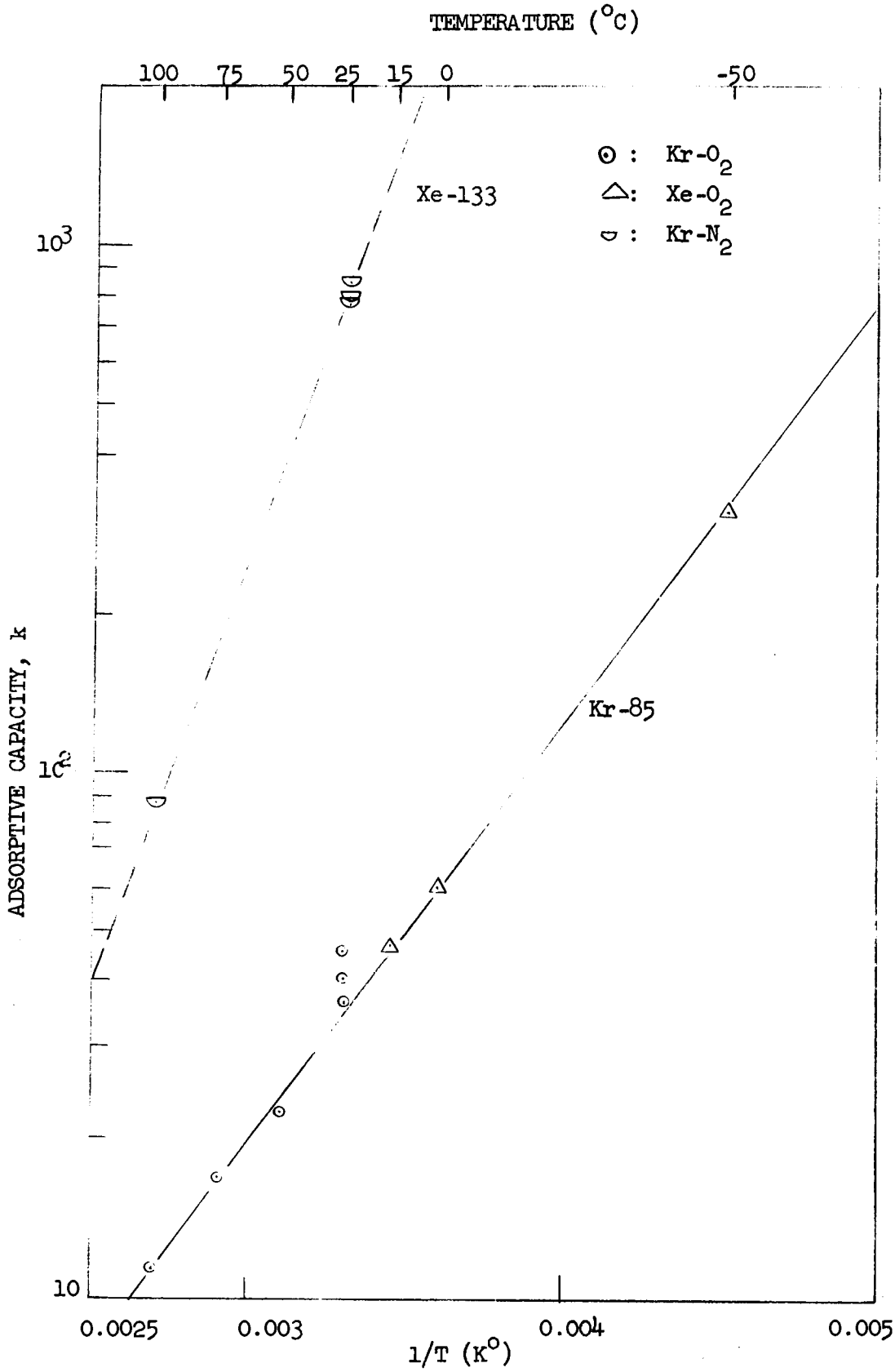

Fig. 12.2. Effect of Temperature on Adsorptive Capacity of HRT Charcoal for Krypton and Xenon.

Equilibrium Studies (R. A. McNees, M. H. Lloyd). Equilibrium adsorption isotherms for krypton at 2 and 28°C show that silica gel had the largest capacity for krypton of any material studied except Columbia G charcoal, but at 125 mm pressure of the gas had only 6.6% of the charcoal capacity at 0°C and 5.2% of that capacity at 28°C. Desorption isotherms at 81, 50, and 35°C indicated no hysteresis effect since any observed deviation was within experimental error.

Static adsorption isotherms for krypton on a variety of other materials have been measured at 2°C and 28°C (Fig. 12.3). The materials include Houdry alpha alumina, Magnesol, Alcoa alumina H-151, vermiculite, Linde Molecular Sieve 4A and Davison silica gel-05.

12.2 Iodine Chemistry (R. McNees, S. Peterson)

HRT Mockup Loop. In the HRT mockup loop an iodine trap, consisting of silvered alundum Raschig rings and located ahead of the platinum catalytic recombiner in the vapor phase of the low-pressure system, removed iodine effectively from the circulating uranyl sulfate solution.

The iodine trap consisted of 2250 g of 0.25-in. Raschig rings containing 48.4 g of silver and packed into a 6- x 6-in. cylindrical bed and was operated only slightly above 100°C. During 4.5 hr of loop operation at 280°C an iodine solution containing 1.06 g of iodine was added to the high-pressure system. Samples were taken periodically from the high-pressure system, condensate tank, pressurizer, and dump tank. Samples taken 20 hr after iodine addition was completed showed essentially no iodine in solution anywhere in the system (Fig. 12.4).

Accumulation of iodine in the trap was followed with a counter mounted at the wall of the trap. The activity registered by this counter rose steadily during the iodine-addition period and reached a maximum 3.5 hr after the iodine addition was stopped. Scanning the bed after completion of the run showed the bottom portion of the bed (flow was up through the trap) to contain about three times as much activity as the top. More precise activity measurements made on the alundum rings and the iodine concentration as a function of position in the trap after disassembly are plotted in Fig. 12.5. Based on these samples the trap contained 0.65 g of iodine, or 63% of the iodine put into the system. The efficiency of the bed for removing iodine has been estimated by Paul Harley of the REED Division to be 35-75% under the conditions of the experiment.

Laboratory Experiments. In laboratory experiments removal of iodine from an oxygen-steam gas stream was facilitated by raising the temperature of the iodine trap from 100°C to 120°C (Fig. 12.6). At these temperatures the iodine-silver reaction proceeded throughout the body of the silver-impregnated alundum support rings and not just on the surface of the rings.

For these experiments an apparatus was assembled which permitted control of the flow rate and composition of a gas stream through a bed of silvered-

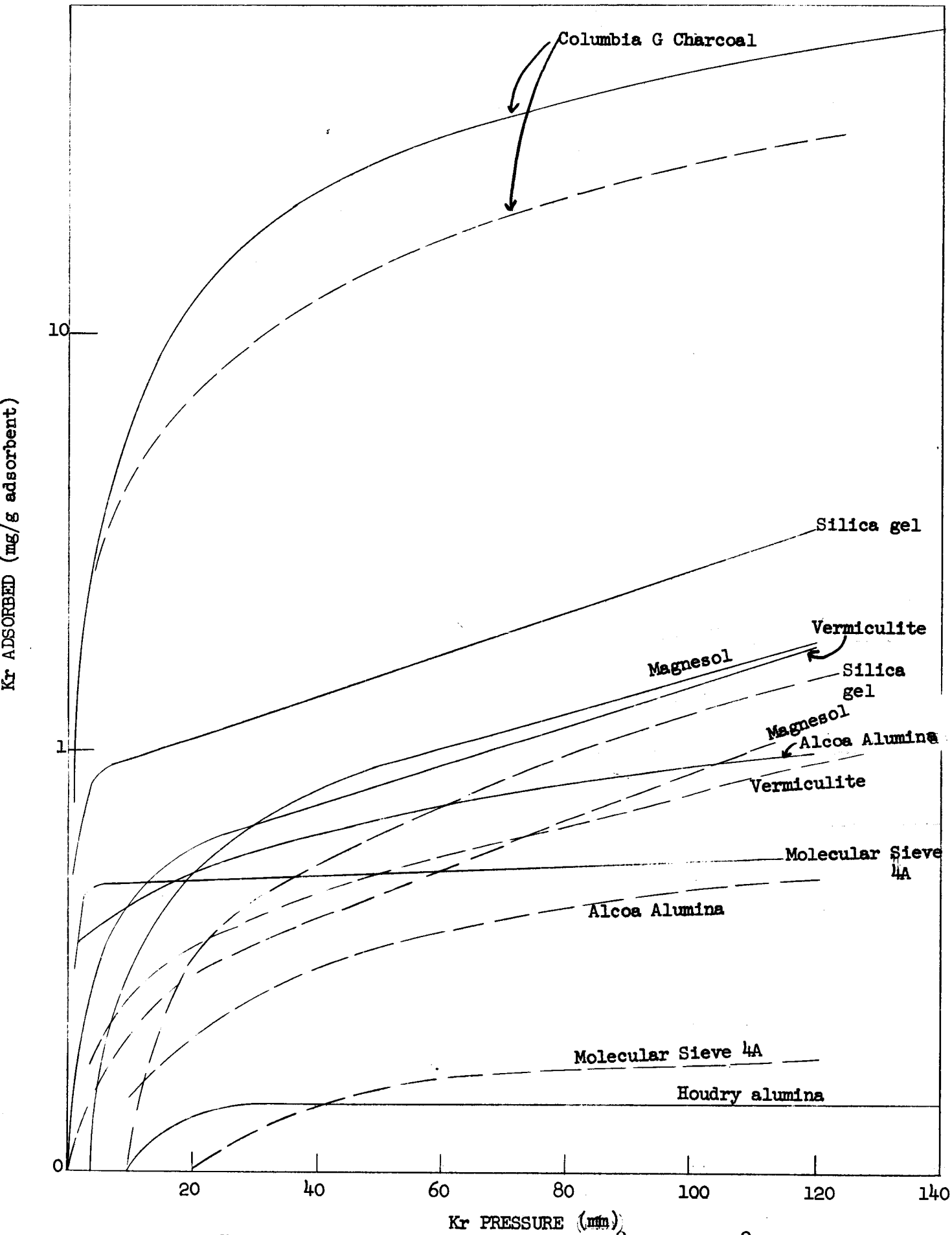

Fig. 12.3. Krypton Adsorption ——at 2°C; ---at 28°C.

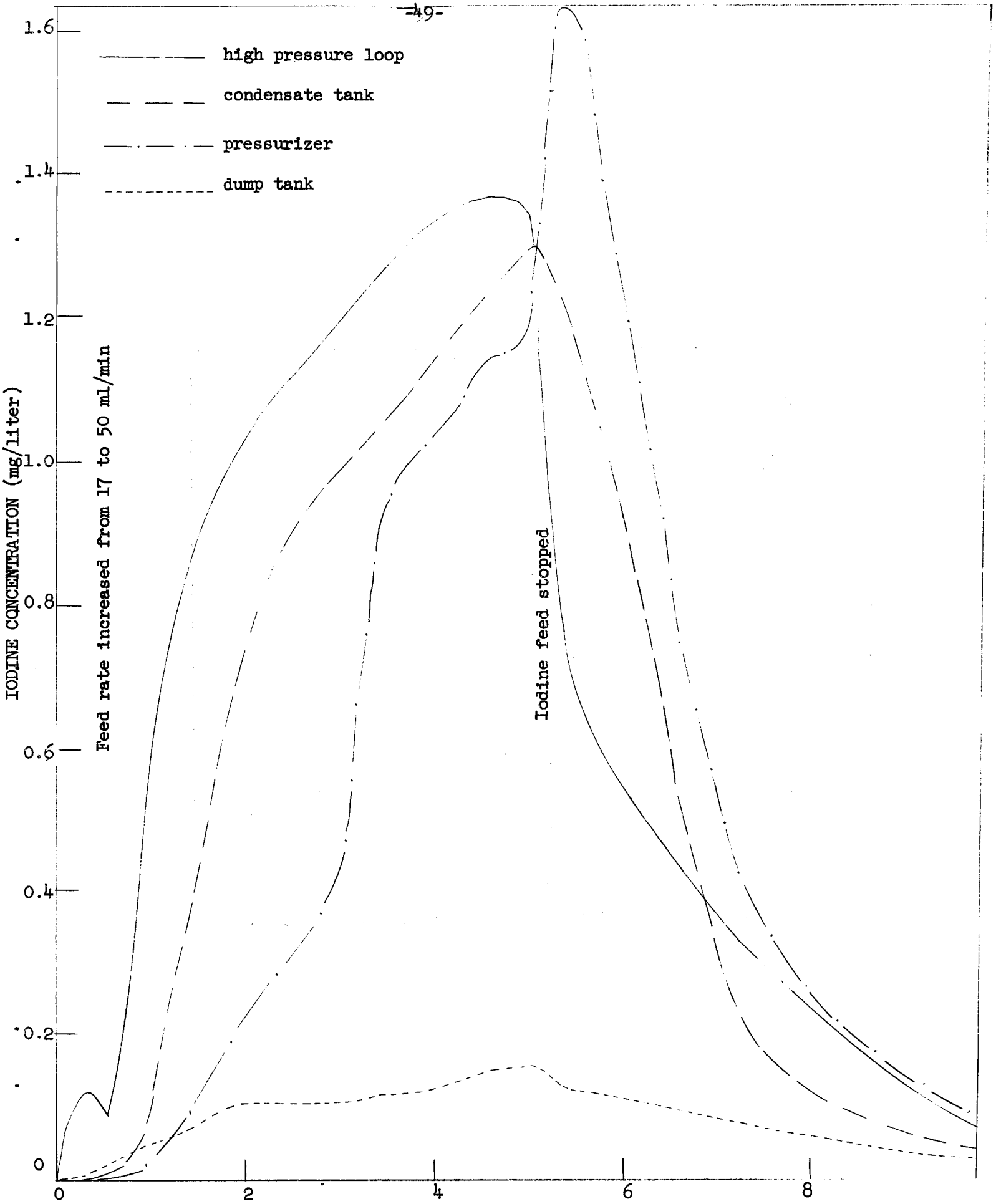

Fig. 12.4. Iodine Concentrations in HRT Mockup.

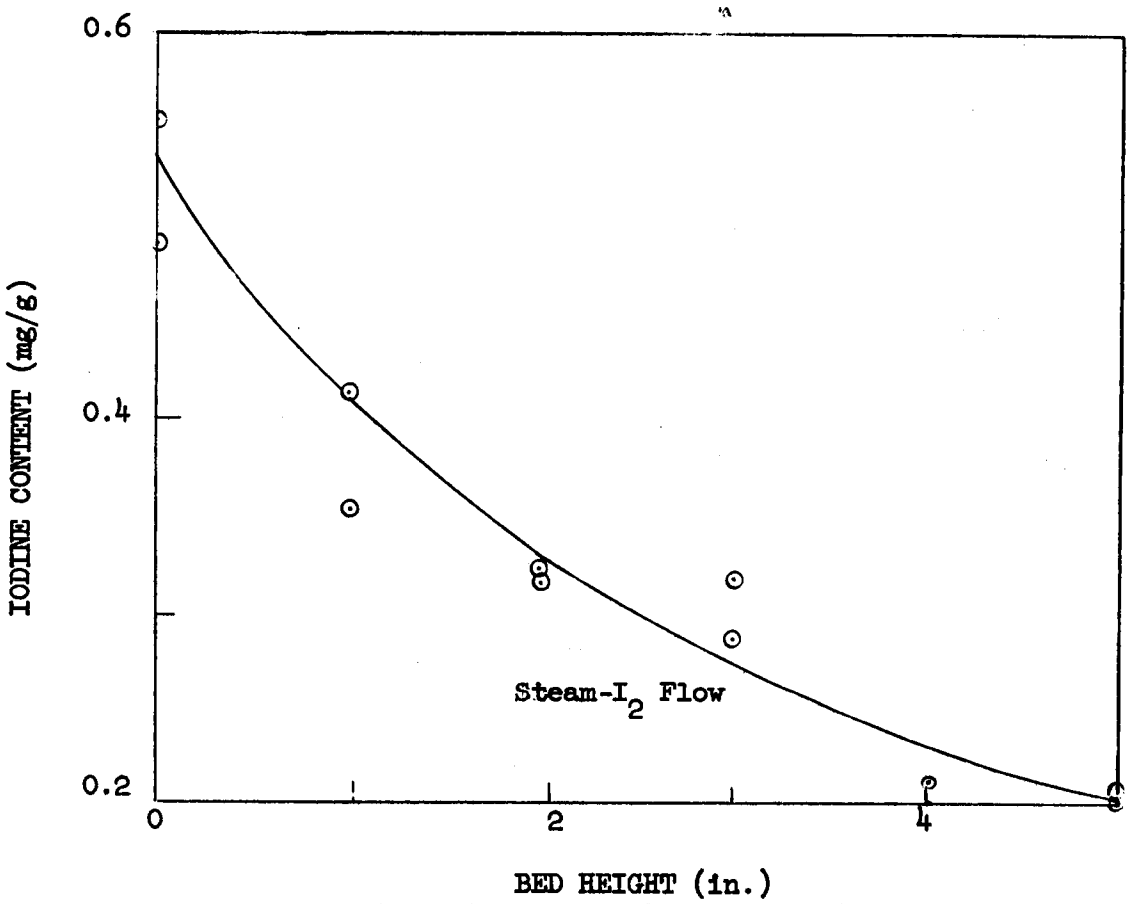

Fig. 12.5. Iodine Distribution in Mockup Silvered-alundum Bed.

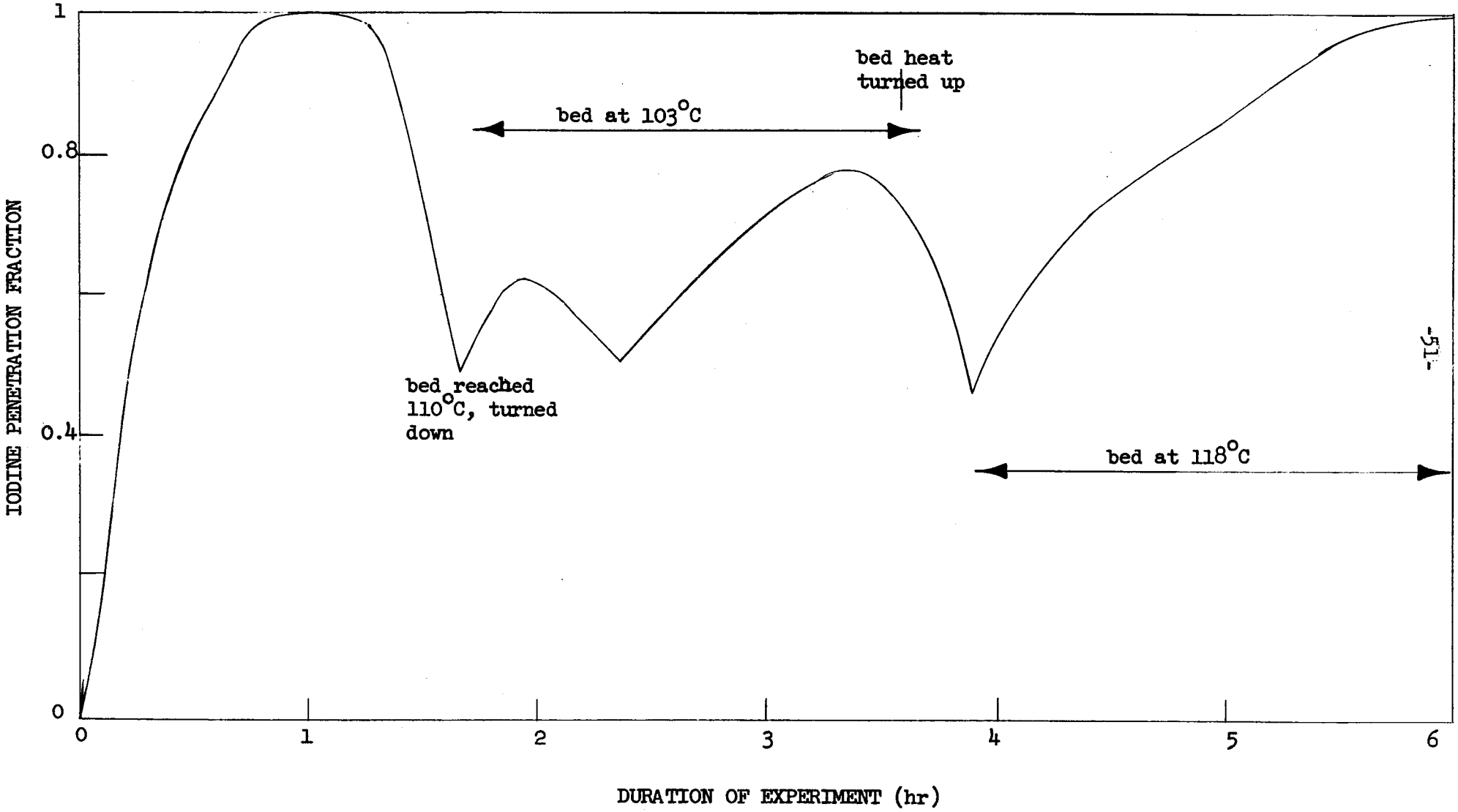

Fig. 12.6. Effect of Variations in Bed Temperature on Fraction of Iodine Penetrating Silvered Alundum Bed.

alundum pellets at a controlled temperature, the effluent gas, largely steam, being condensed and analyzed for iodine content. Steam and iodine-bearing oxygen were mixed and preheated to the desired temperature before being passed through the bed. The iodine concentration was controlled by saturating the oxygen stream with iodine at a controlled temperature. At 54°C and an oxygen flow rate of 45 ml/min, the iodine concentration was 36.3 mg/liter O_2. The silvered-alundum bed was about 1 in. dia by 4 in. deep and contained approximately 45 g of alundum pellets. Initial attempts to hold the bed in a stainless steel mesh basket with similar horizontal spacers to divide the column into three sections resulted in very marked corrosion of the steel mesh as well as by-passing of the bed. For later experiments no basket was used to hold the pellets and the horizontal dividers were of perforated porcelain.

Under the conditions of the experiment the bed at 120°C removed 70% of the entering iodine even though 60% of the capacity of the bed had been consumed. When the bed was disassembled, the top third contained 454 mg I_2, the middle third 457 mg I_2, and the bottom third 276 mg I_2; the gas flow was downward through the bed. (Fig. 12.7).

In another experiment similar to the one just described, except for steam flow which was doubled, the curve shown in Fig. 12.7 was essentially duplicated, with about 37% iodine breaking through the bed at 70% of bed saturation.

In another experiment the iodine-absorption bed was operated at 100°C with wet steam passing through the bed and with other conditions the same as before except that the alundum bed contained only 6.1 mg Ag/g of pellets. Under these conditions iodine broke through the bed almost immediately and after 45 min (which, for the flow rates used, corresponds to 125 ml of condensate in Fig. 12.7) 100% of the iodine entering the bed appeared in the exit stream from the bed. After an additional 30 min the bed temperature was raised to 110°C and the fraction of iodine escaping the bed dropped to about 0.5.

13.0 URANYL SULFATE BLANKET PROCESSING
(R. E. Leuze, J. M. Chilton, R. L. Hickey)

The behavior of zirconium in circulating 1.4 m UO_2SO_4 was calculated from analyses of bomb and drain samples and coupons from runs in Loop P-1. The results (Table 13.1) showed that the hydroclone removed some of the injected preformed oxides but had little effect on zirconium added as a soluble salt and allowed to hydrolyze. It was impossible to evaluate the effect of the hydroclone by comparing the rates of loss of solid from the solution (Fig. 13.1). The amount of zirconium deposited on the surface, which varied from 50 to 98%, was calculated from the amount adsorbed on six sample specimens that had been in the circulating stream. Thermal cycling, as tested in run P-20, did not loosen any significant amount of material from the walls.

The preformed ZrO_2 used in these runs was prepared by hydrolyzing zirconium sulfate in 1.4 m UO_2SO_4 at 250°C. One sample was analyzed for particle

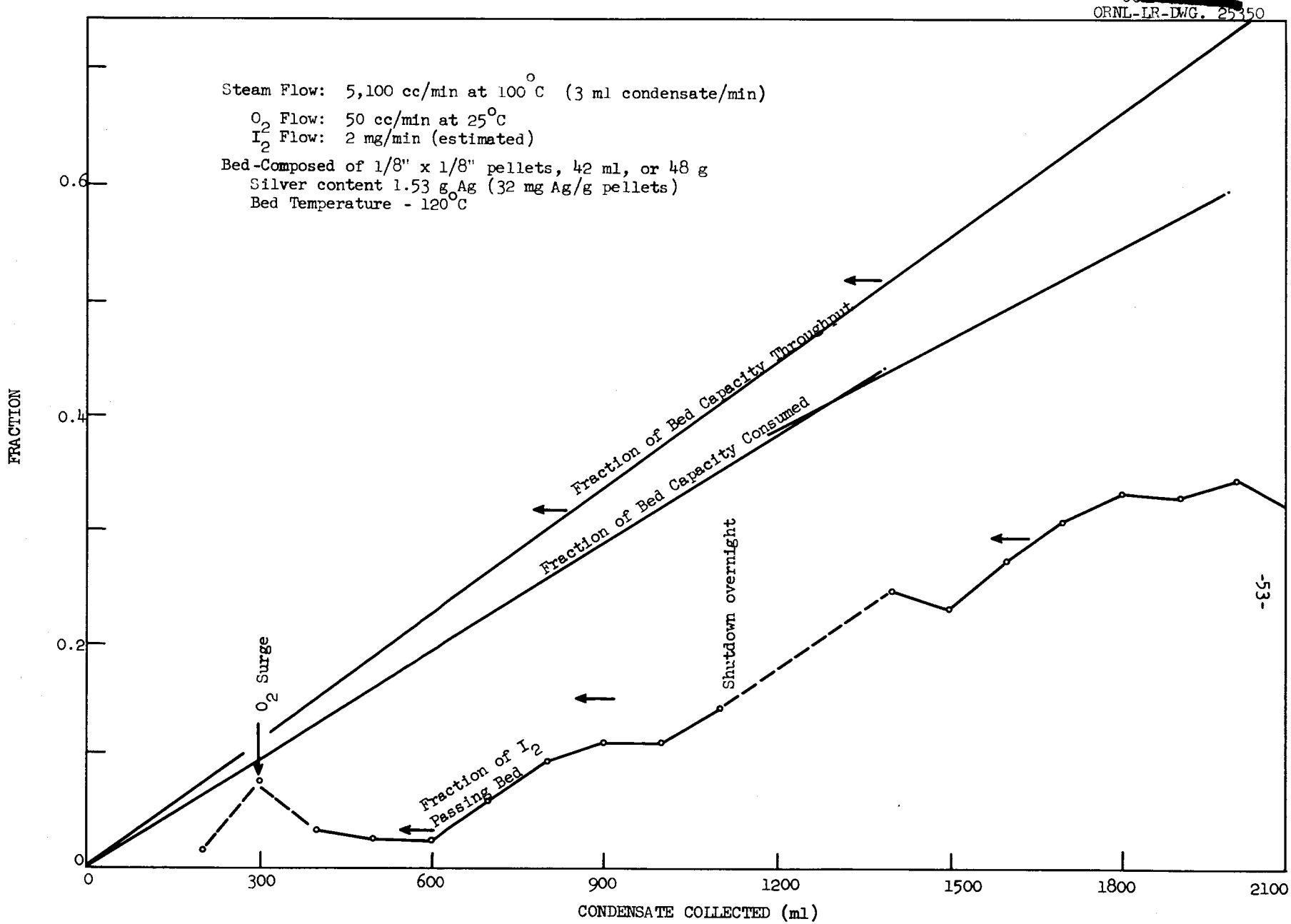

Fig. 12.7 Adsorption of Iodine from a Steam--O_2-I_2 Stream by Silvered Alundum.

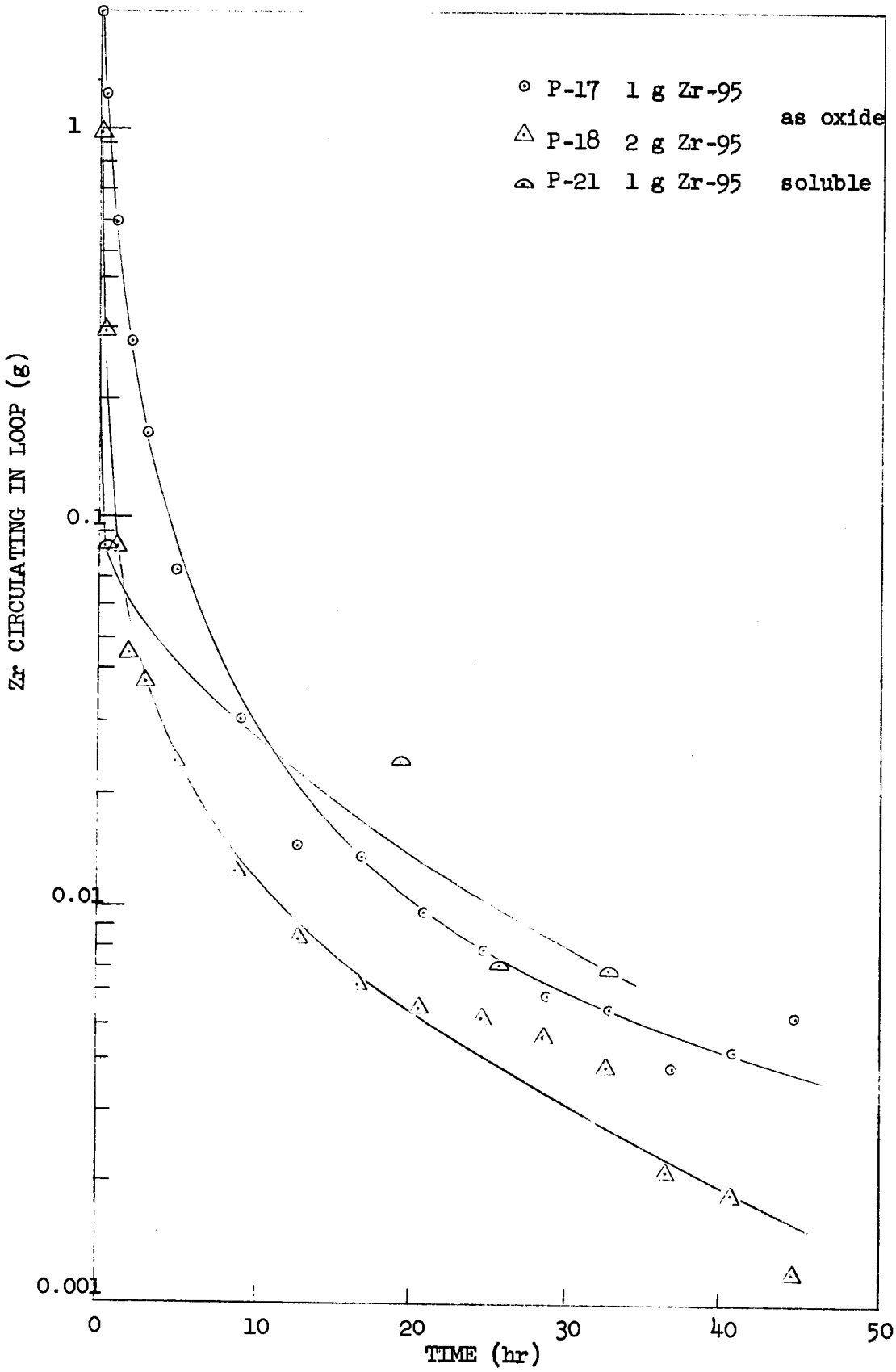

Fig. 13.1. Rate of Disappearance of Zirconium from 1.4 m UO_2SO_4 Circulating at 250°C, 900-950 psi. Hydroclone operated in Runs P-18 and P-21 but Not in Run P-17.

size distribution and showed that 65% was uniformly distributed between 0 and 1 μ, 17% between 1 and 2 μ, and the remaining 18% larger than 2 μ dia.

Runs P-19 and 20 were essentially continuations of run 18. The loop was shut down after 85 hr of operation in run 18, samples were taken, and operation was resumed as run 19; run 20 was begun after 19 hr of operation as run 19 and similar sampling.

Table 13.1. Zirconium Material Balances in P-1 Loop Runs

Conditions: 1.4 m UO_2SO_4, 250°C, 900-950 psi

P Run No.	Length of Run (hr)	Zr Compound	Amount of Zr (g) Added	In Hydro-clone Pot	In Drain	On Walls	Zr Recovery (%) Per Run	Cumu-lative
17	64	ZrO_2	1.0	Not operating	0.125	0.84	97.0	97.0
18	84	ZrO_2	2.0	0.481	0.607	1.025	100.6	99.0
19	19	None	0	0.039	0.028	---	----	---
20	56	None	0	0.016	0.019	0.367	103.1[a]	100[a]
21	33	$Zr(SO_4)_2$	1.0	0.007	0.007	0.975	----	100

[a]Includes deposition in runs 19 and 20.

14.0 THORIUM OXIDE BLANKET PROCESSING
(R. E. Leuze, R. D. Baybarz, O. K. Tallent)

14.1 Adsorption Capacities of Lead and Bismuth Oxides for Fission Products and Uranium

The capacities of lead and bismuth oxides for uranium were about 0.6 g/g oxide and for cerium, 0.2 and 0.1 g/g oxide, respectively:

Oxide	Solution	g U or Ce/g oxide
PbO	0.34 M $UO_2(NO_3)_2$	0.63, 0.64, 0.67
	0.0025 M $UO_2(NO_3)_2$	0.46, 0.56, 0.73
	0.1 M $Ce(NO_3)_3$	0.20, 0.21
	0.01 M $Ce(NO_3)_3$	0.22

Bi_2O_3	0.25 M $UO_2(NO_3)_3$	0.29, 0.55, 0.65
	0.01 M $Ce(NO_3)_3$	0.10, 0.12

Lead oxide was considerably better than bismuth for adsorption of strontium; PbO adsorbed 99.5% of the strontium from a tracer strontium nitrate solution, while bismuth adsorbed only 83.6%.

In all cases the c.p. oxide was slurried with the solution at 250°C for 8-16 hr.

Analysis of a sample of lead oxide loaded with uranium showed the presence of < 10 ppm of nitrate. When the uranyl ion was removed, nitric acid formed and dissolved some of the oxide. Neither PbO nor any known lead-uranium compound was identified by x-ray diffraction. The lead and bismuth oxides remained readily soluble in nitric acid after being heated at 250°C.

14.2 Adsorption by ThO_2

In the presence of lead or bismuth oxide, ThO_2 calcined at 1600°C* adsorbed less than 1% of the uranium and negligible amounts of cerium:

	U			Ce		
Oxide	Solution (%)	Adsorber (%)	ThO_2 (ppm)	Solution (%)	Adsorber (%)	ThO_2 (ppm)
None	98	---	~ 3000	0.25	---	~ 6500
PbO	0.42 0.06	99.04 98.96	217 394	0.26	99.74	10
Bi_2O_3	0.96 0.32	96.15 97.39	300 400	0.11	99.81	20

With PbO/ThO_2 weight ratios of 0.4 or higher, < 10 ppm of neodymium was adsorbed from 0.01 M tartrate solution by ThO_2; with a weight ratio of 0.1, 110 ppm was adsorbed. The tartrate was used to eliminate the effect of nitric acid formed when the cation is removed from solution. For these experiments, ThO_2 and PbO or Bi_2O_3 were slurried in 10 ml of 0.002 M $UO_2(NO_3)_2$, 0.001 M $Ce(NO_3)_3$, or 0.01 M neodymium tartrate at 250°C for 8-16 hr. Uranium adsorption on the PbO and Bi_2O_3 was determined by treating the mixed ThO_2 and PbO or Bi_2O_3 with dilute nitric acid at 100°C. The adsorber and the adsorbed uranium was dissolved, leaving undissolved ThO_2 with its adsorbed uranium.

From 10 ml of tracer strontium nitrate solution, under the same conditions, ThO_2 calcined at 650°C adsorbed 97.7% of the strontium and ThO_2 calcined at 1600°C adsorbed 88.2%.

*Surface area 0.75 m^2/g.

15.0 THORIUM OXIDE SLURRY DEVELOPMENT

15.1 Large-scale Preparation of ThO_2

Preparation of Thorium Oxalate (P. A. Haas, W. M. Woods). Installation of a jet precipitator and rotary filter was completed, and the equipment was tested for leaks and operated for short periods to produce kilogram quantities of thorium oxalate. Operation was satisfactory at a rate somewhat higher than the predicted 2 lb Th/hr. The oxalic acid feed pump and vacuum pump corroded badly.

The mean diameters of two samples of ThO_2 prepared by calcining this thorium oxalate were 0.5 and 2.0 μ. A flocculating agent (Sec. 15.4) is added to the oxalic acid feed. The washed thorium oxalate filter cake is reasonably dry when discharged.

Flame Calcination of Thorium Oxalate (P. A. Haas, C. C. Haws, F. N. McLain, V. L. Fowler, J. R. Phillips). Five runs were completed with the feeder described in ORNL-2385. Operation was continuous, and 100 g of thorium oxide was passed through the oxyacetylene flame in each run. The feeder accomplished the initial purpose of introducing thoria into the flame at a controlled uniform rate, but the feed still entered the flame as small aggregates and reduction of individual, discreet, micron sized thoria particles is believed of paramount importance. Thoria that had been precalcined at 800 or 1000°C aggregated noticeably less than that precalcined at 650°C, though all three were fed successfully.

Tests were also conducted on the feeder alone, without the flame, in an attempt to feed thorium oxalate. At the suggestion of the Ceramics Laboratory, a feed was prepared by ball-milling thorium oxalate for 24 hr with 1% stearic acid. Material thus prepared appears nonaggregated to the unaided

eye and was fed successfully, although aggregates form again when the material is placed in the feeder. The Ceramics Laboratory reports that thorium oxalate (70°C precipitation) is readily fed through this equipment, while thoria (obtained from the 70°C precipitated oxalate) is fed only with great difficulty. With feeds obtained from a 10°C oxalate precipitation, the Chemical Technology Division results were exactly the opposite; i.e., the oxide was fed readily but the oxalate with difficulty. The reason for the difference in results is not known.

More of the physical means of breaking down aggregates that were tried were successful. Use of a flame or an arc discharge shattered the aggregates, much like glass. Deionization in a P-32 source had no visible effect. Grinding by metal objects in the vibratory feeder bowl reduced the size of the aggregates, but a large amount of the powder thus produced attached itself statically to the bowl and could not be moved.

Passage of thoria through the atomic-hydrogen equipment of the Mallinckrodt Chemical Works by their Metallurgical Development Department produced "bird-shot" aggregates which were fused glass-hard and smooth on the outside. They could be broken by striking or pressing firmly with a hard object, revealing a powdered interior. The atomic-hydrogen temperature (3800°C) is therefore more than adequate to fuse ThO_2.

15.2 Slurry Irradiation Studies (J. P. McBride, N. A. Krohn)

Slurry Irradiations in the LITR. Two slurry irradiations were carried out in the LITR. The first was made on a slurry of 650°C fired Davison Chemical Company ThO_2 containing 750 g Th/kg H_2O with no additives. The autoclave leaked, resulting in the loss of all the slurry water after approximately one week in-pile and 140 hr of irradiation. The recovered ThO_2 was brown and lumpy.

The second test was made on a slurry of 1600°C fired ThO_2 that had been pumped 268 hr at 300°C (runs BS15 and 16). The concentration of the slurry was adjusted by density measurement to 500 g Th/kg H_2O for the in-pile test. The test ran smoothly at 300°C for 282 hr, at which time the stirrer timing unit failed. After a lapse of one day for repair the stirrer was restarted without difficulty. After 37 hr of additional operating time the unit again failed, and the test was terminated shortly thereafter. In all, the test was in-pile 366 hr, stirred 330 hr, and irradiated at full reactor power 336 hr. The autoclave has not yet been opened.

Post-irradiation Examination. A slurry of 800°C calcined micropulverized ThO_2 that had been irradiated 2091 hr in the LITR was recovered for examination. Most of the material poured readily from the autoclave as a cream-colored slurry. The autoclave was washed by adding 10 cc of water and shaking. After washing, a plug of ThO_2 was found in the top of the autoclave. The plug constituted 17% of the total solids in the autoclave and was apparently formed by drying of slurry on the walls of the autoclave above the liquid-vapor interface. The material lost no weight upon drying for 48 hr at 110°C. No

evidence of caking was found in the bottom of the autoclave even though the slurry had been 15 weeks in the LITR in a settled condition.

Samples of the slurry that was poured from the autoclave were analyzed for fission products, corrosion products, protactinium, and U-233. The results (Table 15.1) show all constituents except cesium to be with the solid phase, in agreement with previous results on short-term irradiations. The U-233 content was 0.136% after 37 days' cooling. The protactinium content on a mass basis is not obtainable since the counting geometry is not known.

In-Pile Gas Recombination Studies. Equilibrium pressures and radiolytic gas recombination rates were determined as a function of temperature for a slurry of mixed thorium-uranium oxide containing 500 g Th/kg of H_2O with no added catalyst (Table 15.2). The oxide was prepared by coprecipitation of thorium and uranous oxalate followed by calcination to 650°C. The oxide contained 2.18% enriched uranium. The measurements were made in the X-pile over a period of five weeks. The results are reproducible within limits of error, indicating no effect of corrosion product or fission product buildup on the recombination rate. The gas production rate was measured directly by determining the initial pressure rise at low temperatures and low radiolytic gas pressures. Under these conditions, the recombination reaction is negligible. Recombination rates were calculated from the production rate, which is independent of temperature, and the observed equilibrium pressures. The G value for gas production, assuming a neutron flux of 5.3 x 10^{11} n/cm^2.sec and an energy dissipation in the slurry of 170 Mev/fission, was 0.73.

Table 15.1. Radiochemical Analysis of Irradiated Thorium Oxide Slurry

Composition: 800°C calcined micropulverized ThO_2, 20,000 ppm Mo as MoO_3

Conditions: 300-320°C; 2.9 x 10^{13} n/cm^2.sec; irradiated 2091 hr, decayed 35 days

Component	Activity in Supernatant (% of total)	Component	Activity in Supernatant (% of total)
Gross β	1.0	Pa	0.9
Gross γ	1.0	I	0.2
Zr	1.2	U-233	0.1
Nb	2.2	Mo	0.1
Ru	1.1	Fe	0.2
Cs	15.1	Ni	None found
Sr	2.2	Cr	None found
TRE	1.6		

Table 15.2. Equilibrium Pressures and Recombination Rates of Radiolytic Gas in a Thorium-Uranium Oxide Slurry Irradiated in the Graphite Reactor, 5.3×10^{11} n/cm^2.sec

Slurry composition: Th-2.8% U-235 oxide, 500 g Th/kg H_2O

Gas production rate: 3.3×10^{-4} mole H_2/hr

Temperature (°C)	Equilibrium Pressure in Excess of Steam (psi)	Recombination Rate at P_{H_2} = 500 psi (moles H_2/hr/l of slurry)
200	1545	0.03
200	1345	0.04
220	935	0.05
222	760	0.06
235	650	0.07
235	560	0.08
235	610	0.08
250	380	0.12
255	315	0.14
282	145	0.28

15.3 Gas Recombination Studies (J. P. McBride, L. E. Morse)

Catalytic Activity of 1200°C, 4-hr Calcined Coprecipitated Th-U Oxide Slurries. Study of the catalytic properties of an aqueous slurry (500 g Th/kg H_2O) of 1200°C, 4-hr calcined thorium-uranium oxide (0.5% U from coprecipitated oxalates) with 0.05 m MoO_3 was completed. Hydrogen-oxygen reaction rates for both the slurry as prepared and the H_2-activated slurry in the temperature range 165 to 200°C were greatly in excess of 10 moles of H_2/hr.liter of slurry at hydrogen partial pressures of 500 psi. Heating the activated slurry with oxygen lowered the reaction rate only slightly.

Previous to hydrogen activation, the catalytic behavior of the slurry as prepared was erratic. The high reaction rate of 45.2 moles H_2/hr.liter (P_{H_2} = 500 psi) in the initial experiment at 200°C decreased sharply in three successive runs at lower temperatures; however, when the experiment was conducted at 200°C again, the initial reaction rate was again high. Following an experiment at 155°C during which the shaker failed, causing the reaction to proceed at a greatly diminished rate, the catalytic activity of the slurry remained at a very high level in subsequent tests although reproducibility of results was poor.

For the slurry which had been activated by heating with H_2 (250 psi at 25°C) for 2 hr at 270°C, the reaction rate from 165°C to 200°C is given by $k = 4.35 \times 10^4 e^{-2.93 \times 10^3/T}$ where k is the specific reaction rate constant (hr^{-1}) and T the absolute temperature. At 200°C, the highest temperature at which measurements could be made, the reaction rate for the stoichiometric H_2-O_2 mixture was 53.3 moles H_2/hr.liter of slurry at a hydrogen partial pressure of 500 psi. Heating the activated slurry with oxygen (500 psi at 25°C) for 3 hr at 280°C lowered the reaction rate slightly to 48.0 moles H_2/hr.liter of slurry at 200°C and a hydrogen partial pressure of 500 psi.

Catalytic Activity of 1000°C, 16-hr Calcined Coprecipitated Th-U Oxide Slurries. A sample of coprecipitated thorium-uranium oxide (0.5% U) calcined at 1000°C for 4 hr and further calcined for 12 hr at 1000°C had a lower catalytic activity for the reaction of stoichiometric H_2-O_2 mixtures when prepared in an aqueous slurry (500 g Th/kg H_2O) with 0.05 m MoO_3 and hydrogen activated than the 1000°C 16-hr calcined oxide reported on earlier. This difference probably is due to variations in the calcination temperature of the two samples.

The following results were obtained with the thorium-uranium oxide calcined an additional 12 hr at 1000°C. For the slurry as prepared with 0.05 m MoO_3, the reaction rate for the stoichiometric H_2-O_2 mixture was 0.5 mole H_2/hr.liter of slurry at 284°C and a partial pressure of 500 psi H_2. For the hydrogen-activated slurry the rate was 42.5 mole H_2/hr.liter of slurry at 247°C and a hydrogen partial pressure of 500 psi. This is about 50% lower than the value reported earlier.

Catalytic Activity of Slurries Prepared with 1600°C Calcined ThO_2. Slurries containing 1600°C calcined ThO_2 are undergoing further tests for catalytic activity. A slurry (500 g Th/kg H_2O) prepared with ThO_2 calcined at 1600°C for 4 hr and circulated in the REED toroid for 268 hr at about 300°C had very low catalytic activity for the stoichiometric H_2-O_2 reaction. Reaction rates were about 0.1

mole H_2/hr.liter of slurry at 290-300°C and a hydrogen partial pressure of 500 psi for both the slurry as prepared and the hydrogen-activated slurry.

15.4 Flocculation Studies (J. P. McBride, E. V. Jones, R. L. Pearson)

It has been demonstrated (ORNL-2385) that three synthetic polyanionic long-carbon-chain flocculating agents can improve the handling characteristics of thorium oxalate. Settling rates can be increased as much as 50 times for submicron particles. Spectrographic analysis of three useful flocculating agents showed that DX-908 or S-3171 are sufficiently pure for use in the production of thorium oxide (Table 15.3).

Samples of thorium were prepared by jet precipitation of thorium oxalate without any flocculating agent, with DX-908 added and the oxalate decanted and resuspended in distilled water five times, and with DX-908 added and the sample drawn from the settled bed with no washing. The unwashed flocculated jet-mixed oxide did not meet specifications at two points (Table 15.4). Decantation and resuspension of the flocculated oxalate before firing washed out these contaminants. The flocs were so stable that they could be vigorously stirred in fresh water without being dispersed. These results indicate that filtering of the oxalate is unnecessary. Instead, settling and agitation tanks could be used to separate and wash the oxalate. The surface area, crystallite size, and particle size of the above three samples were unchanged.

A slurry of thorium oxalate (d_g = 1.2 μ) was divided between two graduates. The effectiveness of Separan 2610 is shown in Fig. 15.1. To one, Separan 2610 was added at a concentration of 2000 ppm based on the weight of solid thorium oxalate. At the end of 5 min the flocculated slurry had completely settled, leaving a clear supernatant, whereas the pure slurry had not finished settling and was leaving a cloudy supernatant.

15.5 Grindability of High-fired Thorium Oxide (J. P. McBride, R. L. Pearson)

In order to obtain a slurry whose properties will not change as it is pumped, the firing conditions necessary to prevent degradation of individual particles during pumping must be determined. The laboratory jet abrasion tester has been adapted to this purpose. As a slurry is degraded the time for it to penetrate a 1-mil type 302 stainless steel shim stock increases. Oxide fired at 1400°C for 64 hr, 1600°C for 12 hr, or 1800°C for 2 hr was not degraded (Table 15.5). As the temperature of firing increased the total firing time necessary to prevent degradation decreased.

15.6 Mixed Oxide Studies (J. P. McBride, C. E. Schilling)

The effect of firing temperature for 24-hr firings was determined for several properties of thorium-uranium oxides prepared from 10°C coprecipitated oxalates (MSO-CG3-650,2) containing 5.07 g U/100 g Th. Data included uranium content, high-temperature settling rates, crystallite size, surface area, and jet abrasion rate. Further data were collected on some of the above properties for MSO-CG10-650,2 which has a uranium content of 0.54 g/100 g Th.

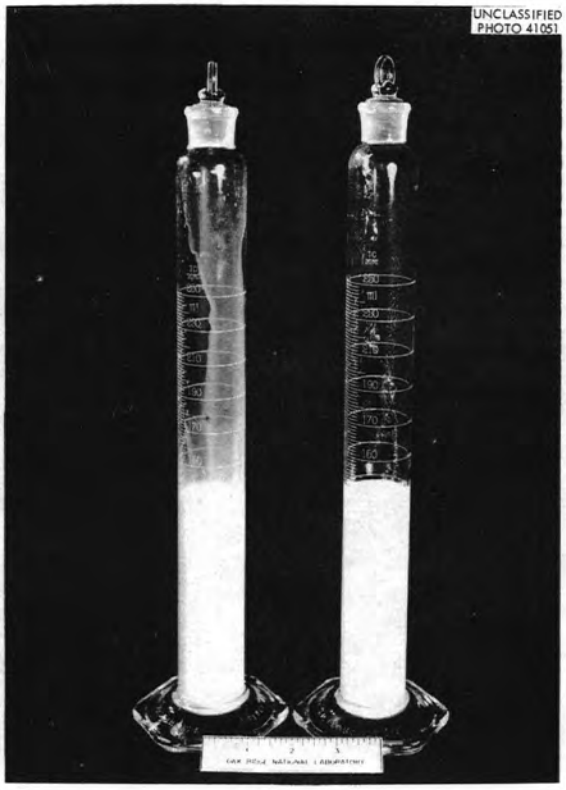

0 min

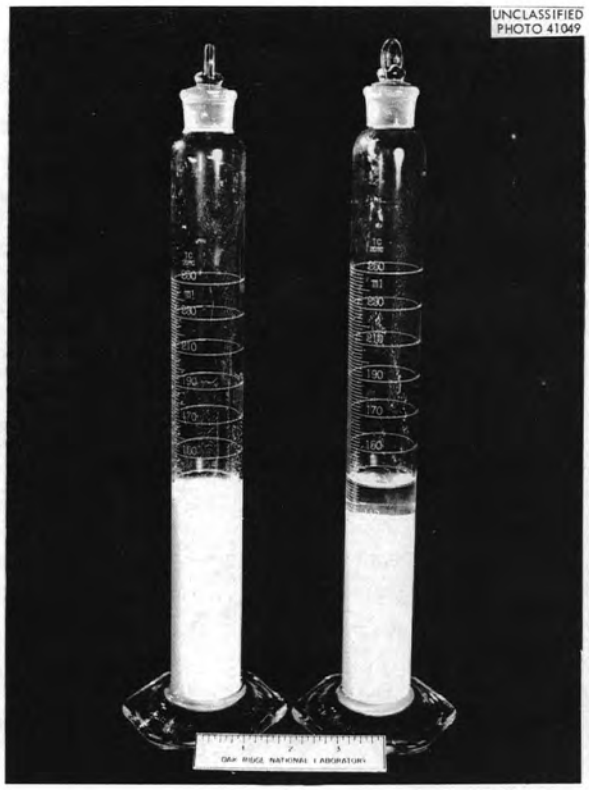

1 min

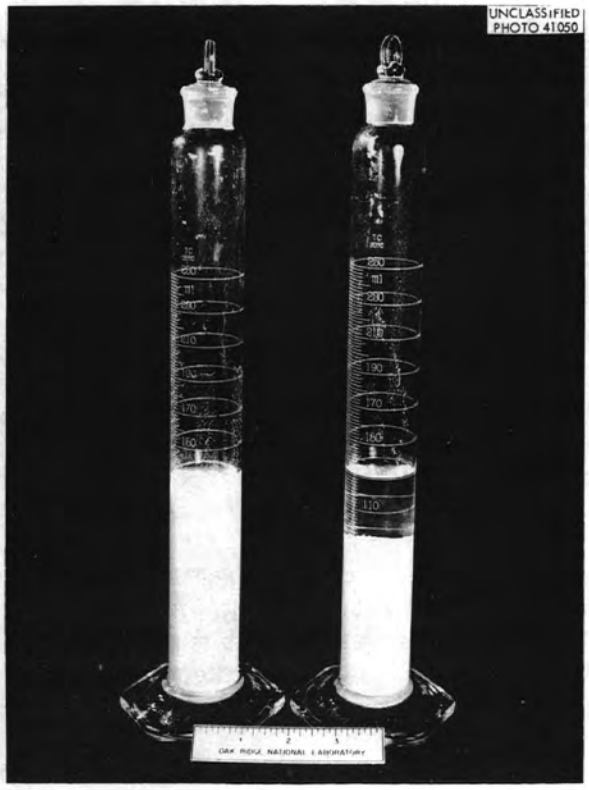

2 min

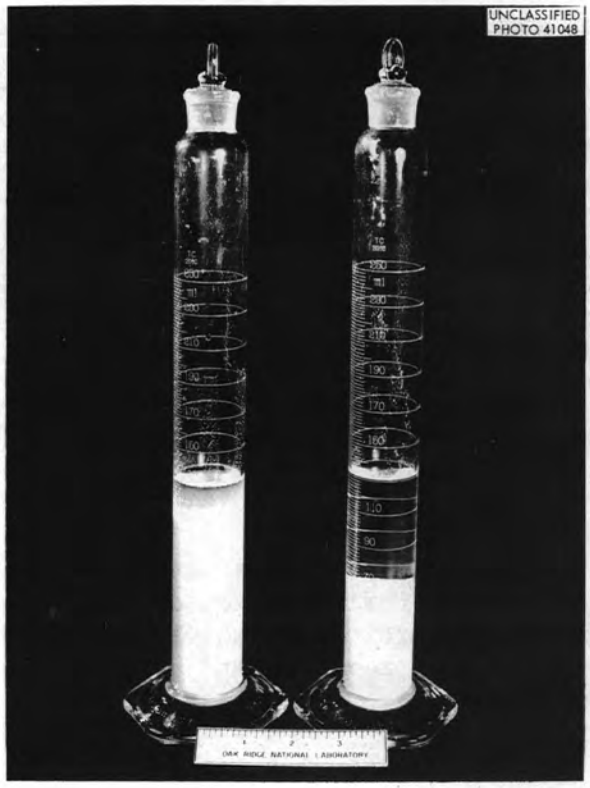

5 min

Fig. 15.1. Effect of a Flocculating Agent on Settling of a Thorium Oxalate Precipitate.

Table 15.3. Spectrographic Analysis of Flocculating Agents

Contaminant	Amount (wt %)		
	Separan 2610	DX-908	S-3171
Al	1.4×10^{-3}	-----	-----
Ca	1.2×10^{-2}	2.4×10^{-3}	3.5×10^{-3}
Cr	-----	-----	1.1×10^{-3}
Cu	4×10^{-3}	-----	-----
Fe	2×10^{-3}	1.2×10^{-3}	4×10^{-3}
K	8×10^{-3}	$<1 \times 10^{-3}$	1×10^{-3}
Mg	3.6×10^{-3}	3.5×10^{-4}	4.5×10^{-4}
Na	1.83	4.3×10^{-2}	8×10^{-3}

Uranium Content. It was speculated in the April HRP Quarterly Report (ORNL-2331) that oxyacetylene firing of a coprecipitated thorium-uranium oxide (MSO-CG10-650,2) at 1400°C and 1600°C might result in appreciable uranium losses by volatilization. However, the uranium content remained constant up to 1600°C for 24-hr firings, with a mean value of g U/100 g Th = 0.54 ± 0.05 at the 95% confidence interval. The same result was obtained with coprecipitated thorium-uranium oxides at higher uranium content for MSO-CG3-650,2 in the range 650 to 1300°C (Table 15.6). The average value is 5.07 ± 0.07 g U/100 g Th at the 95% confidence interval.

Hindered Settling Rates at Elevated Temperatures. Hindered settling rates were obtained on a 250 g Th/kg H_2O slurry of coprecipitated thorium-uranium oxide (MSO-CG3-650,24) with a uranium content of 5.07 g U/100 g Th in the temperature range 25-320°C.

The settling rates were about 10-fold higher at room temperature than for a similar 650°C fired mixed oxide of lower uranium content (0.54 g U/100 g Th). In the temperature range 275-320°C the settling rates were about the same. No satisfactory measurements have been made as yet on MSO-CG3 reburned at 1300°C or above.

Crystallite Size and Surface Area. The results in Table 15.6 show the usual increase in crystallite size and decrease in surface area which accompanied an increase in firing temperature for the mixed oxide MSO-CG3-650,24 in the range

Table 15.4. Chemical Analysis of Jet Precipitated Products

	Jet ppt. Oxide	Jet ppt. Flocculated Washed	Jet ppt. Flocculated Unwashed	Current Specifications
Th (%)	87.37	87.38	86.53	---
Loss on ignition (%)	0.60	0.60	1.85	---
CO_3 (%)	0.46	0.64	0.41	---
C (%)	---	0.04	---	---
NO_3^- (ppm)	< 10	< 10	< 10	10
$SO_4^=$ (ppm)	< 10	< 10	---	500
$PO_4^{\equiv}$ (ppm)	< 10	< 10	24	100
Cl^- (ppm)	< 10	< 10	13	10
Al (ppm)	---	29	---	10
Fe (ppm)	< 10	< 10	17	
Cr (ppm)	< 10	< 10	< 10	50
Ni (ppm)	30	< 10	52	
Na (ppm)	< 10	< 10	29	
Li (ppm)	< 10	< 10	< 10	100
K (ppm)	< 10	< 10	12	
Si (ppm)	20	15	25	100

Table 15.5. Grindability of High-Fired Thorium Oxide

Accumulated Grinding Time (sec)	Penetration Time of 1-mil 302 Stainless Steel (sec)						
	1400°C 12 hr	1400°C 64 hr	1600°C 2 hr	1600°C 4 hr	1600°C 12 hr	1800°C 2 hr	2060°C 3/4 hr
0	47.5	28.5	27.5	30.5	28.5	38.0	30.0
250	50.0	27.0	27.5	30.5	26.5	31.0	27.0
500	54.0	27.5	28.0	32.5	27.5	27.5	30.0
750	60.0	27.5	32.5	34.0	26.5	28.0	34.0
1000	---	30.0	35.0	40.0	28.0	28.5	38.0

Table 15.6. The Effect of Firing Temperature on Some Properties of Thorium-Uranium 10°C Coprecipitated Oxides

Conditions: g U/100 g Th = 5.07
Initial decomposition of 10°C coprecipitated oxalates at 650°C, 2 hr firing time

Firing Temperature (°C)	Uranium Content (g U/100 g Th)	X-ray Crystallite Size (A)	Specific Surface (m^2/g)
650	5.08	94	17.0
800	4.99	140	7.3
900	5.16	535	2.3
1000	5.14	1764	1.5
1200	5.02	<2500	0.91
1300	5.02	<2500	0.62

Table 15.7. Effect of Firing Temperature on Jet Abrasion Rate of Coprecipitated Thorium-Uranium Oxides

Conditions: samples prepared by firing 10°C coprecipitated oxalates at 650°C for 2 hr, refired 24 hr at temperature stated; 250-300 g Th/kg H_2O; 1-mil type 302 stainless steel shimstock target

Firing Temp (°C)	Jet Abrasion Rate (μin./sec) MSO-CG10-650,24 0.54 g U/100 g Th	MSO-CG3-650,24 5.07 g U/100 g Th
650	a	0.63
800	a	3.0
900	0.99	17.1
1000	2.63	24.4
1170	11.6	--
1200	--	27.2
1300	--	29.4
1400	11.2	--
1600	8.9	--

[a]Too low to measure.

650-1300°C. The fact that changes were somewhat steeper than in the 0.54 g U/100 g Th previously reported (MSO-CG10-650,24) indicates that increasing the uranium content may decrease the temperature at which sintering becomes rapid.

Effect of Firing Temperature on Abrasion Rate. The jet abrasion tester was used to show the effect (Table 15.7) of firing temperature and uranium content on the abrasiveness of 250-300 g Th/kg H_2O slurries of thorium-uranium oxides prepared by calcination of the 10°C coprecipitated oxalates at various temperatures. The two oxides, one containing 0.54 g U/100 g Th and the other 5.07 g U/100 g Th, showed similar sharp increases in abrasion rate as a function of firing temperature and increasing abrasiveness with increasing uranium content (Fig.15.2)

15.7 Hindered Settling Rate--Viscosity Studies (J. P. McBride, C. T. Bishop, J. M. Dalla Valle)

Viscosities and hindered settling rates of a number of slurries of the D-16 (pilot plant product) and CB-10 (from 10°C precipitated oxalate) were measured. These included oxides fired at 800, 1000, 1300, and 1600°C in concentrations ranging from 200 to 700 g Th/kg H_2O.

When plotted logarithmically against absolute reciprocal temperature, the relation was linear and the slope was approximately the same regardless of slurry concentration over the temperature range 25-90°C. From 25°C to 0°C, there was a slight curvature. The data are represented by the equation $\eta = a\, e^{10^3/T}$ where η is the viscosity of the slurry, a is a function of the concentration and particle size, and T is the absolute temperature.

Since the last two variables are known to be reflected in the measurement of hindered settling, it has been possible from the experimental data to determine viscosity as a function of hindered settling rate and absolute temperature. If u_o denotes the hindered settling rate in cm/sec at a temperature T°K and η is the viscosity in centipoises at that temperature, then for all data available at this time, $\eta = A\, u_o\, e^{2.85 \times 10^3/T}$ where A is characteristic of the oxide and has a value for both the D-16 and CB-10 series of approximately 0.003. Further work is being done to fix this constant in terms of a shape factor of the slurry particles.

Part IV. CHEMICAL ENGINEERING RESEARCH

16.0 SEPARATION OF LIQUIDS
Program Leader: J. C. Bresee

16.1 Effect of Hydroclone Size on Separation* (C. V. Chester, B. L. Baker)

In a series of tests on 0.25, 0.4, and 1.0-in. hydroclones, the ability of a hydroclone to de-water solvent was independent of hydroclone size. The ability of a hydroclone to remove solvent from water varied for the hydroclones studied, but in no systematic way. It is believed the variation is due to small differences in construction and operation, rather than size, of the hydroclones.

*Work done at the University of South Carolina under contract.

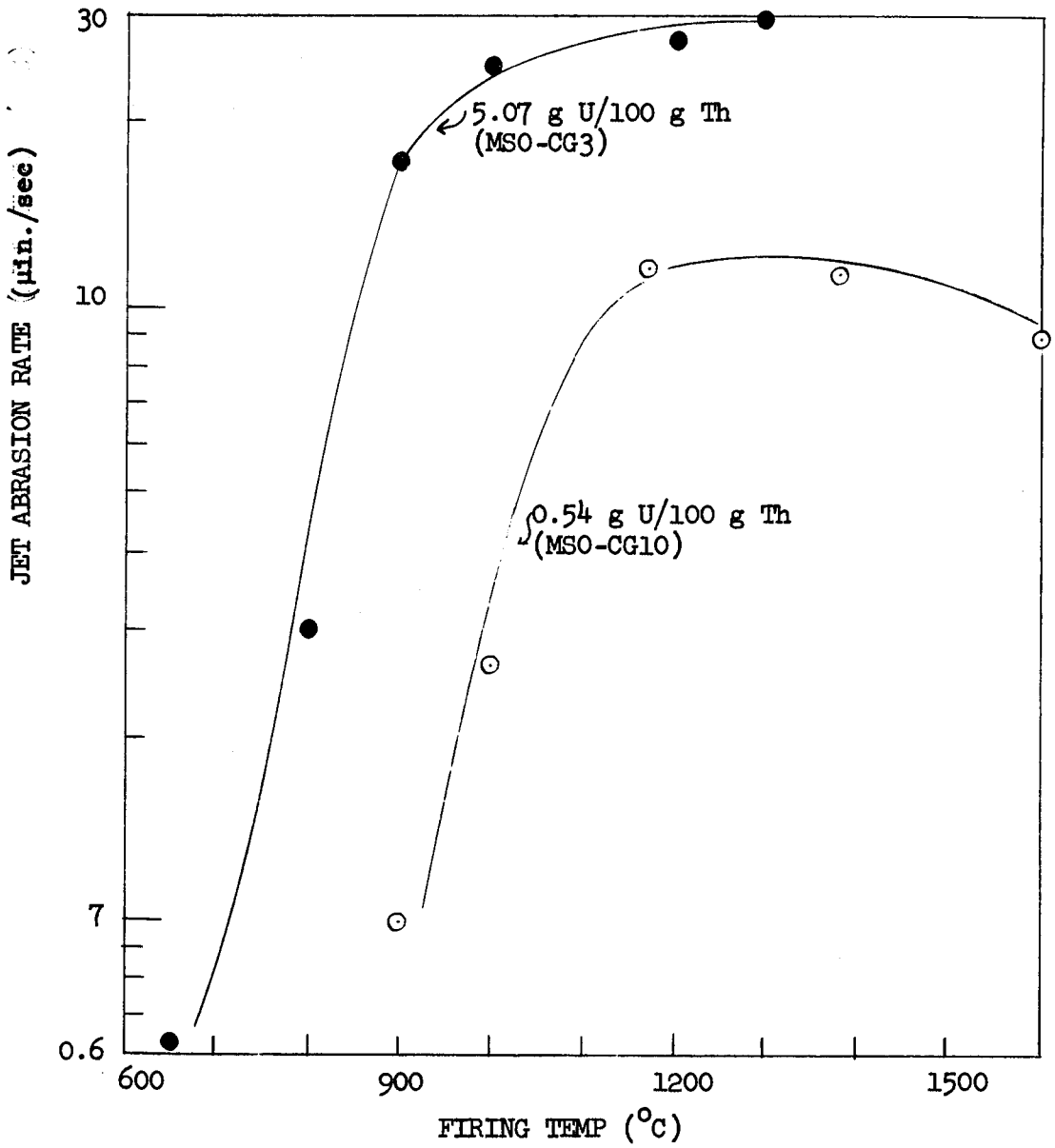

Fig. 15.2. Effect of Firing Temperature and Uranium Content on Rate of Jet Abrasion of Thorium-Uranium Oxide, 10°C Coprecipitated.

The plot of separation factor for water against the control function for 0.25, 0.4, 1.00, and 3.75-in.* hydroclones shows variation in the performance of the four hydroclones (Fig. 16.1a). The scatter of the data is probably the result of operation over a wide range of pressure drops. The plot of separation factor for solvent against the control function on the 0.40-, 0.25-, and 3.75-in. hydroclones shows differences (Fig. 16.1b) but these are not considered significant. The failure of the 1-in. hydroclone to achieve a separation factor greater than 10 at control function values of between 1.5 and 3.0 is ascribed to geometrical factors other than size; the many data showing low separation factors are the result of operation under nonideal conditions.

All sizes of hydroclones operated efficiently when the pressure drop between the feed and underflow exceeded 15 psi.

16.2 Axial-flow Hydroclone

The axial-flow hydroclone discussed in ORNL-2385 is shown in Fig. 16.2.

17.0 IN-LINE INSTRUMENTATION

Program Leader: W. H. Lewis

(J. W. Landry, M. J. Keely, T. S. Mackey, R. W. Stelzner)

17.1 Interface Level Control System

An interface-level control system is being constructed for use with the conductivity-type digital probe that has been under test since April in the Metal Recovery Plant 1A-column. The controller is designed to give proportional control, at a pulsed interface, with an accuracy of ± 1/4 in. of interface level. A pressure-resistant probe is being prepared for controlling interface-level in the bottom of the 1S organic-continuous column that is being installed in the Metal Recovery Plant. The probe is a molded assembly of stainless steel electrodes with insulators of a commercial plastic.

17.2 Concentration Monitors

Uranium. Construction is about 80% complete on a prototype of an in-line high-sensitivity alternating-current polarograph to monitor uranium, of concentration around 10 ppm, in process raffinate streams. The technique used is phase discrimination against the condenser current. A new operational amplifier of increased stability and reliability is being incorporated in the prototype instrument.

Nitric Acid. The radiofrequency monitor for nitric acid concentration in process feed was operated another month on an air-lifted recirculating feed stream. Stability and sensitivity were good at about 0.5 M, the design concentration, and this sensitivity was maintained even at higher concentrations

*Data for 3.75-in. hydroclone from D. J. Simkin, R. B. Olney, A.I.Ch.E.J. 2:545 (1956).

[redacted]

ORNL-LR-DWG. 25351

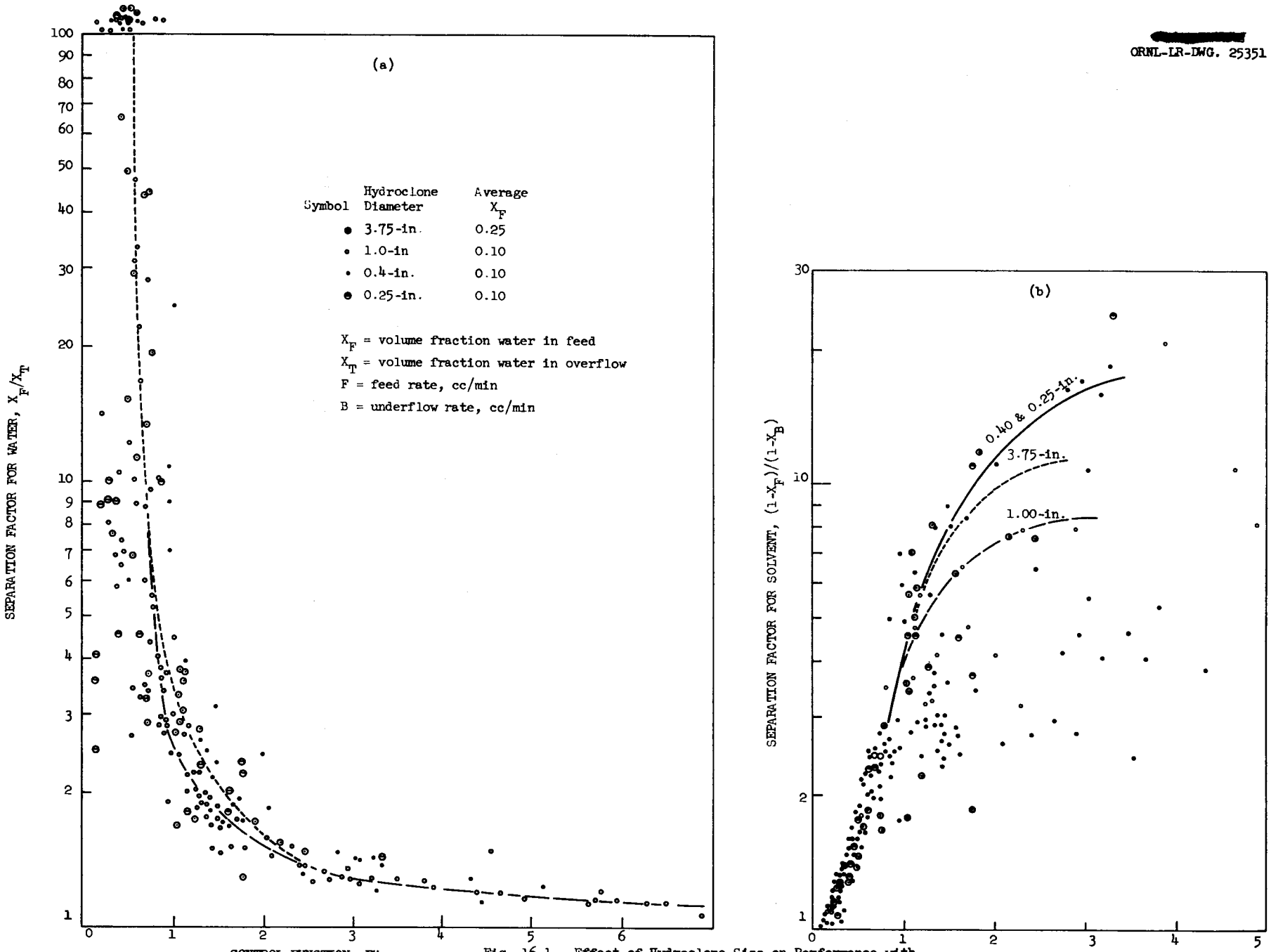

Fig. 16.1. Effect of Hydroclone Size on Performance with Water-Kerosene System. (a) Separation factor for Water. (b) Separation Factor for Solvent.

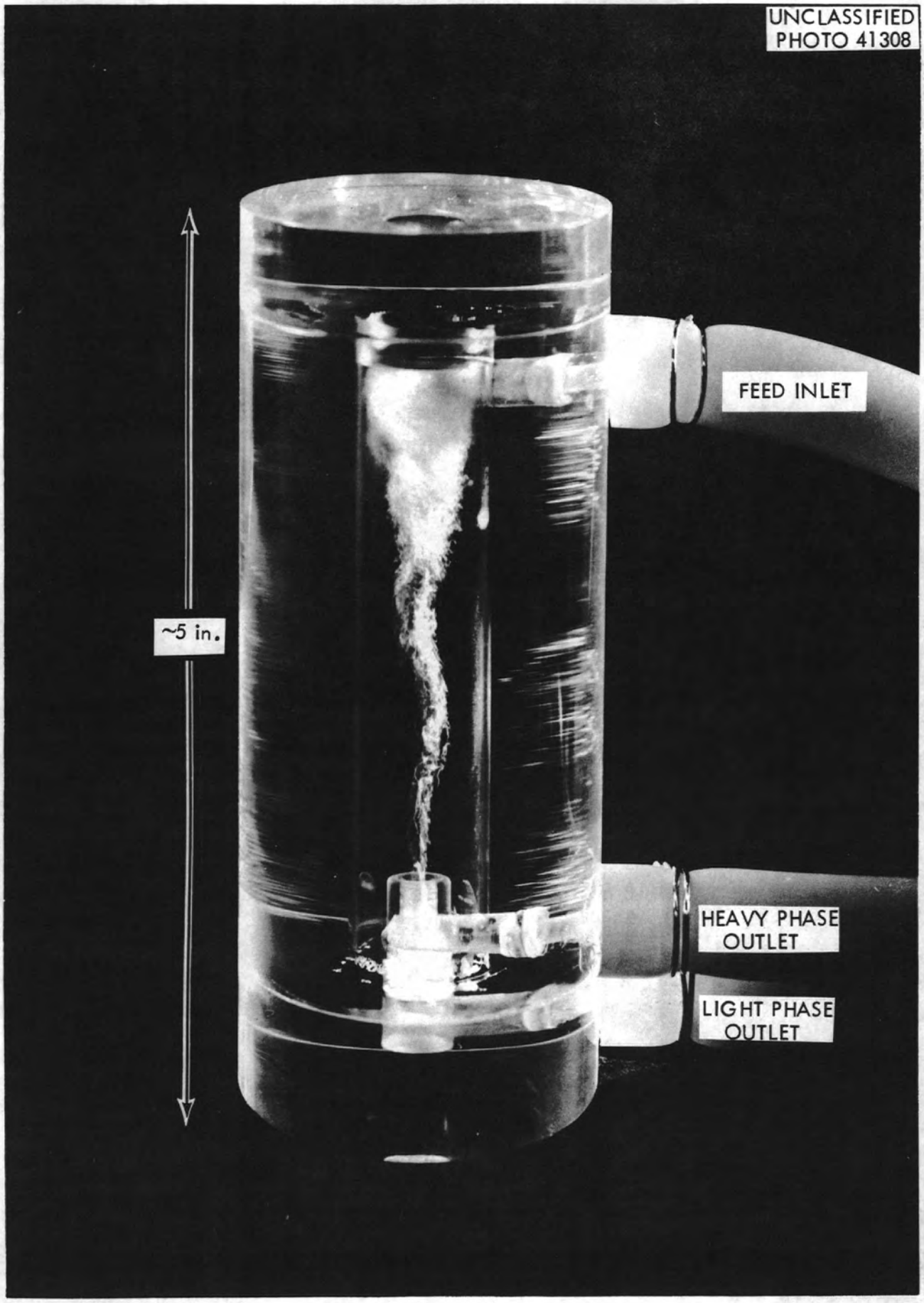

Fig. 12.2. Axial-Flow Hydroclone – Air-Water Separation.

($\pm$ 0.05 M HNO_3 at 4 M HNO_3). The air-lift is being replaced with a pump; there was a change in oscillator response which was traced to a loss of nitric acid due to air-lifting.

Chloride. The design of the chloride-ion monitor for the Darex process was modified. Previously, the difference of potential between the Ag/AgCl electrode and the saturated calomel electrode was measured with a manual potentiometer, and a more sensitive potentiometer was desired. When the modification of the monitor is complete the potential will be amplified by a factor of 100 and the chloride concentration will be read on a D'Arsonval type of meter. This provides better read-out and also enables continuous read-out. Calibration of the monitor, by means of known standards, is still required.

Gamma Activity. Fabrication is complete of the components of the prototype falling-stream gamma monitor. The monitor will be tested in the Thorex 1AP stream during the Thorex short-decayed runs.

A liquid-scintillator type cell is being considered.

Alpha Activity. A glass test cell, as a prototype of an all-metal cell designed for an in-line alpha monitor, is being constructed for study of the hydraulics. A liquid scintillator, consisting of trans-stilbene dissolved in phenyl cyclohexane, is contacted with the aqueous, flowing, sample stream that is being monitored. The scintillator appears to undergo no chemical or radiation damage and no contamination from contact with process type solutions.

Another alpha monitor cell has been constructed in which a small sample stream from the solution to be monitored will be nebulized and carried, in a streamlined envelope of air, through ion-collection electrodes. When the cell was checked with smoke, the air envelope carried the smoke through the electrodes without the smoke contacting the electrodes. This cell is intended to work with organic liquids as well as aqueous and to be free of background effects that would result from contaminated electrodes, and the fine division of the sample stream is intended to give increased ionization efficiency for increased sensitivity of the monitor. It is planned to de-entrain the mist from the air subsequent to the measurement.

17.3 Flow Rate Measurement

Bubble-velocity Meter. A photoelectric, glass model of a bubble-velocity meter for measuring liquid flow rate in the range 0-60 gal/hr was found accurate within $\pm$ 1%. A stainless steel model, with a sonic pickup for detecting bubble exit, is being assembled for testing. Other pickups being evaluated are a capacitance relay, a conductivity probe, a differential transformer, and a gamma absorptometer. An electronic relay system, which was designed for timing the bubble velocity, has an accuracy of $\pm$ 0.01 sec. The objective is an economical, accurate flow rate meter, for low flow rates, with no moving parts and no flow restrictions.

Turbine Meter. A commercial (Potter) turbine type of liquid flow rate meter is being installed for evaluation in the Thorex Pilot Plant interface purge system. A turbine type of gas flow rate meter is being developed for installation in the Volatility Pilot Plant. The sleeve bearings, which are customary in this type of meter, were replaced with carburized Hastelloy B cone bearings; sleeve bearings and ball-point-to-flat-plate bearings were unsatisfactory for this service. A commercial (Nucor) magnetic type of liquid flow rate meter is being checked preliminary to evaluation in the Metal Recovery Plant's 1AF stream; its range is 0-1 gal/min and it has a minimum flow restriction of 0.5 in. dia.

17.4 Density Measurements

A densimeter is in construction for evaluation in a Metal Recovery Plant pulse column. It will be installed about ten plates below the column feed point and will measure the density of the aqueous phase for the purpose of anticipating and preventing column losses. It consists of a sampling pot, to be connected to the column, organic-filled dip tubes, and a pressure recorder. Column pulse energy is used to pick up the aqueous sample, by means of an upward directed inlet in the column, and circulate the sample through the pot and back into the column to a point near the inlet.

A sonic type of densimeter is being investigated for the same purpose. The sonic velocity, in aqueous and organic solutions with densities in the range 0.8-1.3 g/ml was found to be directly proportional to density. A simple measuring cell was used in the tests and was built to be compatible with pulse column installation.

18.0 ION EXCHANGE TECHNOLOGY
Program Leader: I. R. Higgins

18.1 Resin Flow Meters (C. W. Hancher)

A mechanical resin flow meter (Fig. 18.1) was installed in the reservoir section of the 36-in.-dia resin test loop. A model is being designed to be installed in a 6-in.-dia pipe 12 in. long to be tested on the 12-in.-dia contactor now being installed at Y-12.

18.2 Uranium Recovery from Ore (C. W. Hancher)

Installation of the bomb-liner uranium scrap plant (Fig. 18.2) at Y-12 is progressing according to schedule. Startup is scheduled for Sept. 1, 1957. Use of the 12-in.-dia ion exchange contactor is the basic step of the scrap plant. The following modifications were made on the contactor: Slip-water outlets were enlarged; the old gear pump system was replaced by an air pulse system; the top of the contactor was opened to the atmosphere.

UNCLASSIFIED
PHOTO 40890

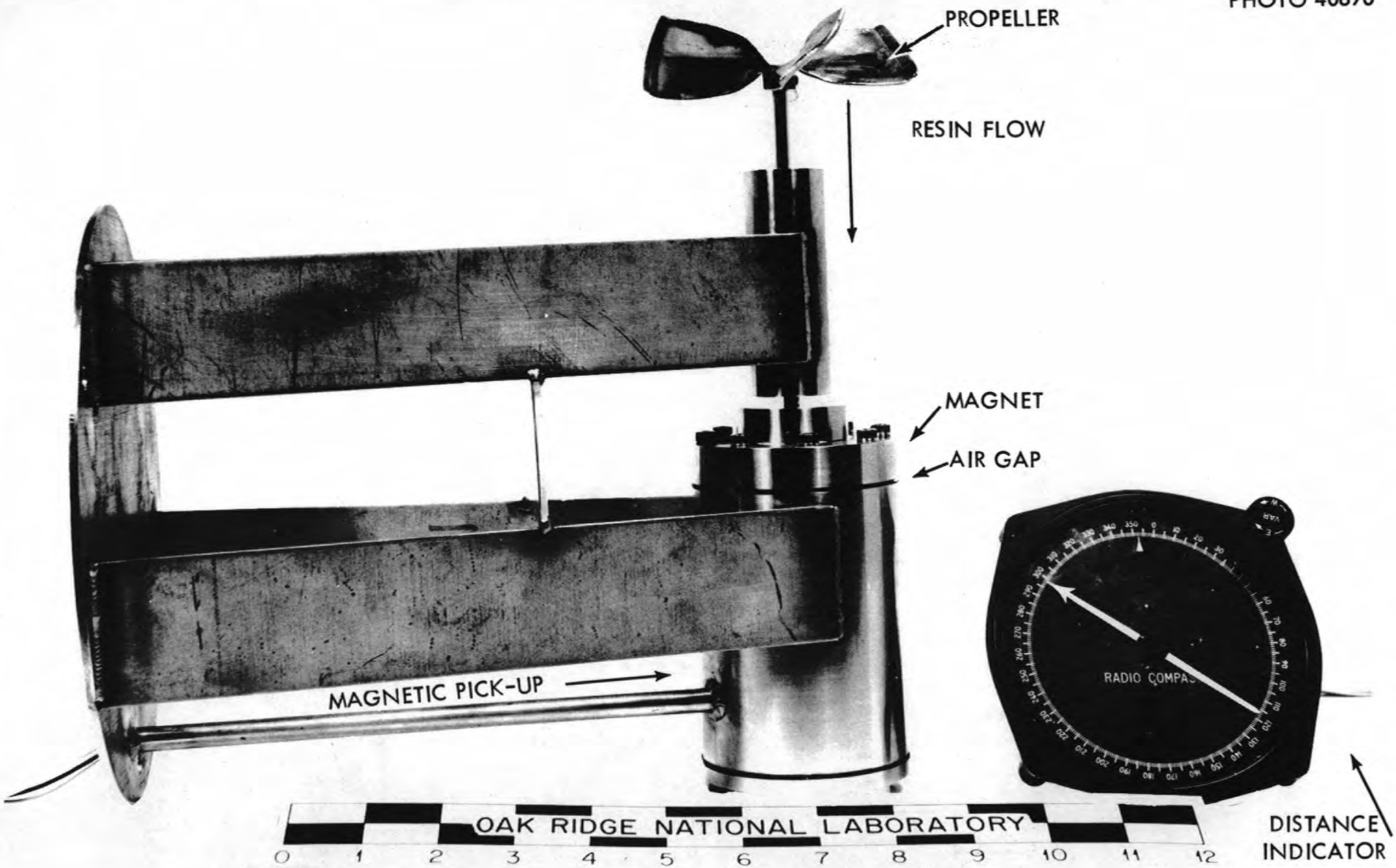

Fig. 18.1. Mechanical Resin Flow Meter.

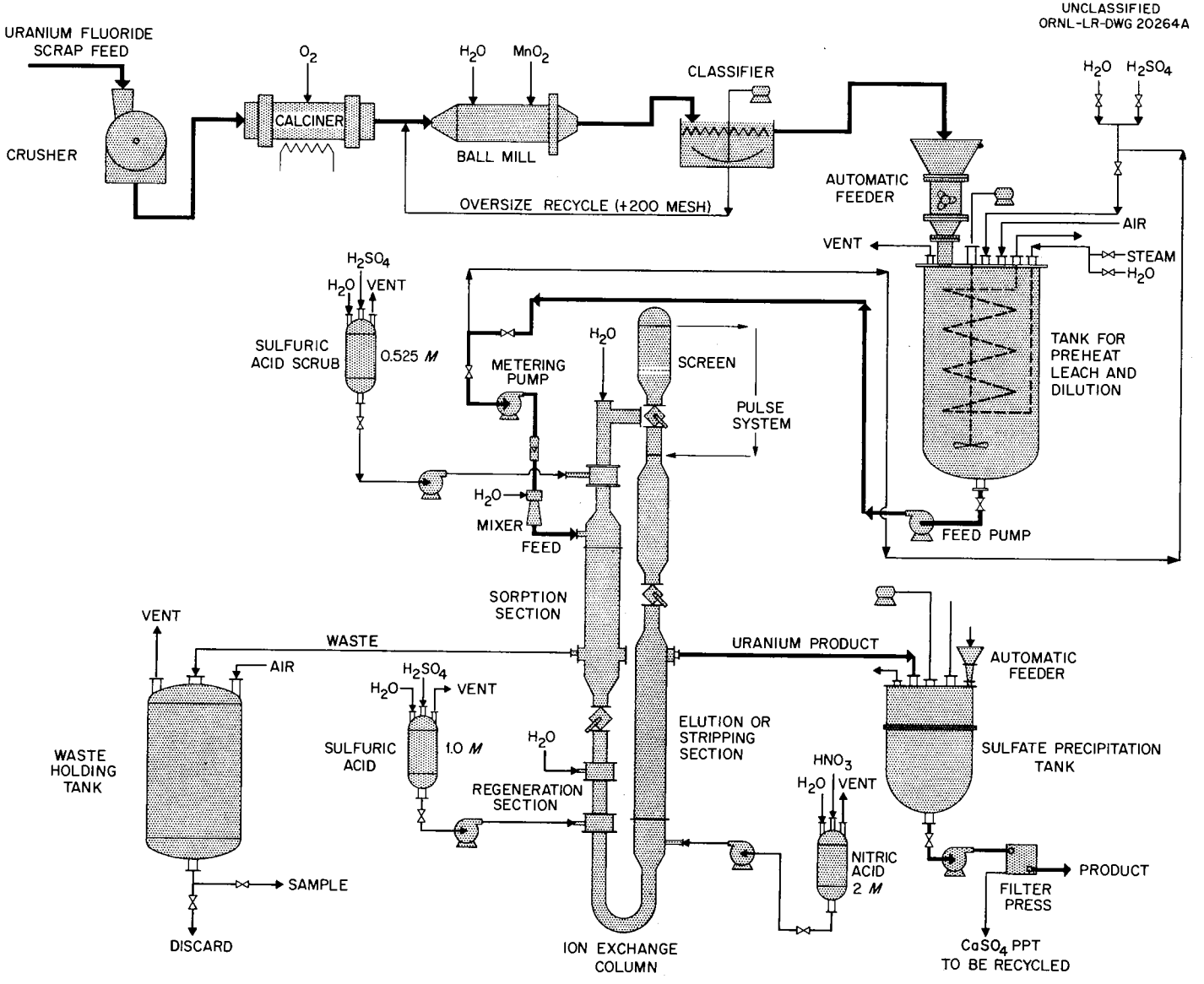

Fig. 18.2. Process Flow Diagram Ion Exchange Unit.

Appendix. PUBLICATIONS AND SPEECHES

ORNL-2332, "A Criticality Study of the Thorex Pilot Plant," O. O. Yarbro, (Unclassified)

ORNL-2335, "ORNL Metal Recovery Plant Activities During FY 1957," J. M. Chandler and W. H. Lewis (Confidential)

ORNL-2357, "Recovery of Uranium and Neptunium-237 from Chalk River Uranyl Nitrate Solution in ORNL Metal Recovery Plant," W. H. Lewis (Confidential)

ORNL CF No.:

57-8-30, "Nuclear Considerations in Design of High Temperature Process Heat Reactors," J. T. Roberts (Unclassified)

57-8-35, "Volatility Project--Report of July 30, 1957, BNL Meeting on Their Volatility Pilot Plant Accident," G. I. Cathers and R. P. Milford (Unclassified - Internal Use Only)

57-8-37, "HRP ThO_2 Preparation - Results of Preliminary Unit Operations Precipitation and Filtration Studies," P. A. Haas and W. J. Clossey (Unclassified Internal Use Only)

57-8-76, "Process Design Section Status Report for Period July 15 to August 15, 1957," H. E. Goeller (Confidential - Internal Use Only)

57-8-95, "Volatility Pilot Plant Run C-3," C. L. Whitmarsh (Confidential - Internal Use Only)

57-8-101, "Dissolution of STR Fuel Elements in Molten LiF-NaF," L. M. Ferris (Confidential - Internal Use Only)

57-8-102, "Status of the Mice Program," W. D. Bond (Secret)

57-8-109, "Estimate of Potential Fuel Reprocessing, Revision No. 18," J. W. Ullmann (Confidential)

57-8-118, "Radioactive Waste Treatment and Disposal--A Bibliography of Unclassified Literature," D. L. Africk, P. E. Novak, J. O. Blomeke (Unclassified)

57-8-124, "Status of Program for Study of Effect of Radiation Damage on Extraction Reagent Performance," R. E. Blanco and D. W. Sherwood (Unclassified)

57-8-132, "Operation of the Engineering Development Facility for HF Dissolution of Fuel Elements in Fused Salts," S. H. Stainker (Confidential - Internal Use Only)

Subcontract Reports:

Carter Laboratories, Subcontract No. 992, "July 1957 Monthly Report," (Unclassified)

Georgia Institute of Technology, Subcontract No. 1082, "Semiannual Report on Radiation Damage to Solvents," (Unclassified)

Houdry Process Corporation, Subcontract No. 904, "August 1957 Monthly Report, Preparation of Thorium Oxide Sols," T. H. Milliken (57-OCR-15)

Speeches

The following papers were presented at the Gordon Research Conference on Ion Exchange August 5-8, 1957 in Meriden, New Hampshire:

"Liquid Ion Exchange Media--Cation Exchange," C. A. Blake

"A Comparison of Fixed and Moving Bed Ion Exchange," C. W. Hancher