UNCLASSIFIED

MARTIN MARIETTA ENERGY SYSTEMS LIBRARIES
3 4456 0351468 6

ORNL-2275 cy 4
Stable Isotope Separation

CENTRAL RESEARCH LIBRARY
DOCUMENT COLLECTION

CALUTRON COLLECTIONS OF INERT-GAS ISOTOPES

H. B. Greene

CENTRAL RESEARCH LIBRARY
DOCUMENT COLLECTION
LIBRARY LOAN COPY
DO NOT TRANSFER TO ANOTHER PERSON
If you wish someone else to see this document, send in name with document and the library will arrange a loan.

OAK RIDGE NATIONAL LABORATORY
OPERATED BY
UNION CARBIDE NUCLEAR COMPANY
A Division of Union Carbide and Carbon Corporation
UCC
POST OFFICE BOX X · OAK RIDGE, TENNESSEE

UNCLASSIFIED

Printed in USA. Price 25 cents. Available from the

Office of Technical Services
U. S. Department of Commerce
Washington 25, D. C.

LEGAL NOTICE

This report was prepared as an account of Government sponsored work. Neither the United States, nor the Commission, nor any person acting on behalf of the Commission:

A. Makes any warranty or representation, express or implied, with respect to the accuracy, completeness, or usefulness of the information contained in this report, or that the use of any information, apparatus, method, or process disclosed in this report may not infringe privately owned rights; or

B. Assumes any liabilities with respect to the use of, or for damages resulting from the use of any information, apparatus, method, or process disclosed in this report.

As used in the above, "person acting on behalf of the Commission" includes any employee or contractor of the Commission to the extent that such employee or contractor prepares, handles or distributes, or provides access to, any information pursuant to his employment or contract with the Commission.

UNCLASSIFIED

ORNL-2275

Contract No. W-7405-eng-26

STABLE ISOTOPES DIVISION

CALUTRON COLLECTIONS OF INERT-GAS ISOTOPES

H. B. Greene

DATE ISSUED

MAY 31 1957

OAK RIDGE NATIONAL LABORATORY
Operated by
UNION CARBIDE NUCLEAR COMPANY
A Division of Union Carbide and Carbon Corporation
Post Office Box X
Oak Ridge, Tennessee

UNCLASSIFIED

MARTIN MARIETTA ENERGY SYSTEMS LIBRARIES

3 4456 0351468 6

ORNL-2275
Stable Isotope Separation
TID-4500 (13th ed.)

INTERNAL DISTRIBUTION

1. C. E. Center
2. Biology Library
3. Health Physics Library
4-5. Central Research Library
6. Reactor Experimental Engineering Library
7-26. Laboratory Records Department
27. Laboratory Records, ORNL R.C.
28. A. M. Weinberg
29. L. B. Emlet (K-25)
30. J. P. Murray (Y-12)
31. J. A. Swartout
32. E. H. Taylor
33. E. D. Shipley
34. C. P. Keim
35. W. H. Jordan
36. M. L. Nelson
37. S. C. Lind
38. F. L. Culler
39. A. H. Snell
40. A. Hollaender
41. M. T. Kelley
42. G. E. Boyd
43. K. Z. Morgan
44. J. H. Frye, Jr.
45. C. E. Normand
46. R. S. Livingston
47. T. A. Lincoln
48. A. S. Householder
49. C. S. Harrill
50. C. E. Winters
51. D. W. Cardwell
52. E. M. King
53. A. J. Miller
54. D. D. Cowen
55. J. A. Lane
56. Russell Baldock
57. J. R. McNally, Jr.
58. Boyd Weaver
59. P. S. Baker
60. M. J. Skinner
61. S. J. Cromer
62. R. R. Dickison
63. P. M. Reyling
64. G. C. Williams
65. F. R. Duncan
66. L. O. Love
67. W. A. Bell
68. W. K. Prater
69. G. M. Banic
70. W. R. Rathkamp
71. K. A. Spainhour
72-76. H. B. Greene
77. J. R. Sites
78. ORNL – Y-12 Technical Library, Document Reference Section

EXTERNAL DISTRIBUTION

79. R. F. Bacher, California Institute of Technology
80. Division of Research and Development, AEC, ORO
81-578. Given distribution as shown in TID-4500 (13th ed.) under Stable Isotope Separation category (100 copies – OTS)

RETENTION OF ELECTROMAGNETICALLY SEPARATED INERT-GAS ISOTOPES

H. B. Greene

SUMMARY

Experimentation has been undertaken to establish that inert-gas ions produced in the electromagnetic separators can be collected and retained on metal surfaces by means of adsorption. A technique has been worked out whereby target surfaces quickly saturated at ordinary reception rates can be renewed by continuous or periodic vaporization and condensation of a suitable metal. Subsequent outgassing of these targets for recovery of the collected isotopes yields many times more gaseous impurities than desired product, and a practical system for cleaning the inert gases to chemical purities of 99.5% or better is described. From one run, lasting about 100 hr, during which 5.3 ma-hr (4.4 ml) of A^{36} was monitored, approximately 2.0 ml of natural A^{36} was recovered. About 1.5 ml of this was enhanced from a natural isotopic abundance of 0.34% to about 70% From the same run, 118 ml of A^{40} was recovered, most of which assayed better than 99.98%.

INTRODUCTION

The inert gases represent one family of elements of which no isotopically enriched samples have been made available in the inventory of the Stable Isotopes Division. Therefore it is very desirable to add this family to the list of elements separated with the versatile electromagnetic equipment,[1,2] so that the program may be brought one step closer to the ultimate goal, which is the enriching of each naturally occurring atomic species, in the periodic chart, that is not already 100% abundant.[3] This report is a review of the work done in adapting the electromagnetic facilities to the enriching of inert-gas isotopes.

COLLECTIONS ON VARIOUS TYPES OF TARGETS

It has been demonstrated that when inert-gas ions having an energy of 60 kev strike a metal target they will adhere to it and that the subsequent release of the retained atoms is possible by heating the target in a vacuum.[4] To determine whether 35-kev ions, such as those produced in a typical separation run, could be absorbed on suitable target material and be recoverable as isotopically enriched gas, a few preliminary runs were made in a 24-in.-radius separator, in which a beam of Ne^{20} of about 1 ma impinged on a stainless steel target for several minutes. Targets bombarded in this manner were subsequently outgassed in an all-glass vacuum system by means of a high-frequency induction heater. The amount of occluded gas released when the target was heated made it impossible to measure the amount of neon released; however, most of the targets treated in this manner clearly indicated the presence of neon in the spectrum when tested with a spark coil.

To test the feasibility of collecting ions of less energy and to try to obtain more data without tying up production facilities, an attempt was made to collect some isotopes of neon and argon in an available small-scale $3\frac{3}{4}$-in.-radius apparatus. (This is a small ion source and target built some years ago to aid in the evaluating of charge materials for full-scale isotope separation.) Ions having an energy of 2.8 kev were directed onto metal targets, and the targets were outgassed in a glass vacuum system. Samples of the gas evolved here were taken to the mass spectrometer laboratory of this division for analysis.[5] The following gases were present: hydrogen, nitrogen, oxygen, water vapor, argon, carbon dioxide, and a variety of hydrocarbons. Ratios between certain gases and between these gases and argon were calculated and compared with the corresponding ratios in a control outgassing of a like target which had not been exposed to the ion bombardment, The

[1] M. L. Smith (ed.), *Electromagnetically Enriched Isotopes and Mass Spectrometry*, Academic Press, New York, 1956.

[2] J. R. Walton (ed.), *Stable Isotope Separations in Y-12*, ORNL-1422 (July 1, 1952).

[3] C. P. Keim, *Ann. Rev. Nuclear Sci.* (Annual Reviews, Inc., Stanford, Calif.) 1, 263 (1952).

[4] J. Koch, *Nature* 161, 566 (1948).

[5] For a description of the equipment used in this analysis see C. E. Melton and H. M. Rosenstock, *J. Chem. Phys.* 26, 314 (1957).

data indicated that there was virtually no adsorption.

Following this work, a receiver was constructed for operation in the 48-in.-radius separators. This receiver had three water-cooled copper plates mounted on the receiving plane. The graphite defining face had three corresponding slots, each limiting the received beam to an area of 1.4 × 4.0 in., as measured on the 45-deg plane of the defining face, or to 1.0 × 4.0 in., as measured normal to the 0-deg beam.[6] A silver target which consisted of two pieces of silver $\frac{1}{16}$-in. thick mounted side by side was placed behind each slot. These pieces measured 0.7 × 4.0 in., and they just covered the area behind the defining slot.

The silver targets were outgassed prior to the run and were fastened to the copper plates with screws. A run was made by using a double gas-feed source,[2] and a beam of 35-kev ions of A^{40} of 0.3 to 0.5 ma was received for approximately 10 min on each target; the yield was essentially zero. The procedure was repeated, with a beam of about 1 ma being received for about 45 min on each target. Still the ratios of the different gases present upon outgassing indicated that no significant amount of argon had been collected. A third run was made in which approximately 3 ma of beam fell on each target for about 15 min. These three targets (six pieces of silver) were placed in an all-metal vacuum system, which consisted of a closed-end stainless steel tube, previously outgassed. A cap was welded on the other end in order to close the system, the tube was heated to approximately 750°C for about 1 hr, and a sample of the gas was taken out through a side arm.

The following tabulated list of the various peak-height ratios obtained from the analysis of this sample shows very clearly the presence of argon.

	Control	Sample
PH^{28}/PH^{32}	20.8	30.6
PH^{32}/PH^{40}	3.56	0.068
PH^{28}/PH^{40}	73.9	2.1

The symbol PH^{28} represents the height of the peak, due to carbon monoxide and nitrogen, at mass 28. Similarly, PH^{32} and PH^{40} represent the heights of the peaks, due to oxygen and argon, respectively, at mass 32 and mass 40. No attempt was made to standardize the readings for the relative gas sensitivities; the ratios were merely compared with those from a control analysis. The control sample was obtained from a piece of silver, similar in shape and size to the targets, which was similarly preoutgassed and outgassed, but which was not exposed in the electromagnetic separator.

The pressure of the gas, as measured by the mass spectrometer manometer for analysis, was approximately 3 mm Hg. Since the original volume was about 150 ml, the quantity of gas was about 0.6 ml. About 10% of this was argon, which means that there was a collection of about 0.06 ml, or about 0.00054 ml per square centimeter of surface.

A vacuum system was now made up which included a manometer above the outgassing chamber so that the pressure could be observed during and after outgassing. A sketch of this equipment is shown in Fig. 1. The operation of this equipment is tantamount to that of a hand-operated Toepler pump.

Because of the limited amount of space that would be available in any kind of practical receiver, some sort of technique for increasing the effective receiving area would be necessary in order to retain appreciably greater amounts of gas. One method of doing this would be to allow the ions to fall on oblique surfaces, so that the true surface area would be much greater than the

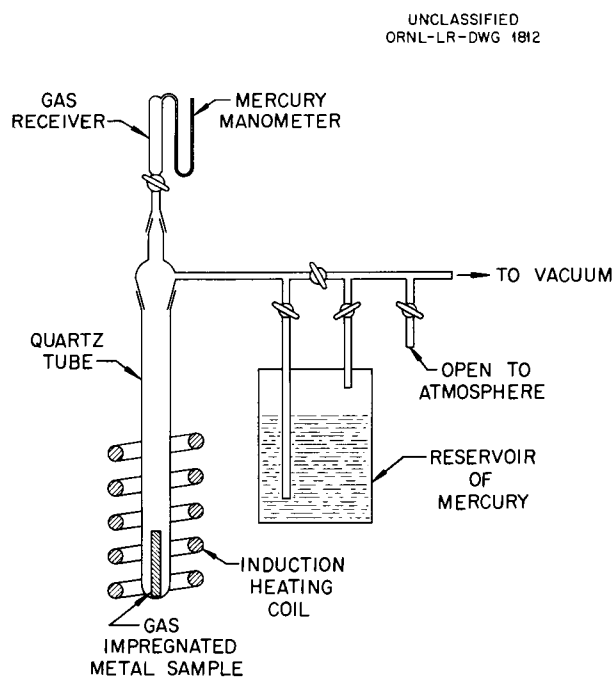

Fig. 1. Gas Recovery Apparatus.

[6] H. B. Greene, *Development of the Basic Isotope Receiver*, Y-630 (July 7, 1950).

projected area normal to the 0-deg beam. This idea was tried by taking a strip of 0.010-in. silver sheet $^{41}/_{64}$ in. wide and 54 in. long, folding it with accordion-like plaits, and placing it in a typical water-cooled copper pocket.[2,6] This target was exposed to a low-intensity beam of A^{40} ions for a sufficient length of time to ensure saturation. The strip was outgassed in the vacuum system described above (Fig. 1) at approximately 750°C for about 1 hr; the gas obtained was compressed into the sample bottle and taken to the mass spectrometry laboratory for analysis. Here the peak heights of all the components were measured, and the relative abundances of the constituents were calculated by standardizing for the sensitivities of the different gases present. Approximately 2 ml of gas (STP) was released. About 10% of the mixture proved to be argon, which means that there was about 0.2 ml for 34.6 in.^{2}. This is about 0.00090 ml/cm^2 (0.00387 ml per square centimeter of projected area).

The receiver was reconstructed with three properly spaced slots together with three copper pockets, for the purpose of determining what could be done in separating some isotopes. This would not only check what could be done at lower reception rates with the less abundant isotopes, but would give more conclusive evidence that the gas was truly coming from the received beams and was not argon from the air. Impurities present had made it difficult to see any depletion in the isotopes of masses 36 and 38 in the A^{40} sample just mentioned. A plaited silver strip, with approximately 140 cm^2 of surface area, was placed in the A^{36} and A^{38} pockets but was omitted from the A^{40} pocket so that greater beam strengths could be maintained on the receiving surfaces. A run was started, and reception was continued until 180 ma-hr of A^{40} had been received in the uppermost pocket. The strip in the A^{38} pocket gave a yield of approximately 1.4 ml of gas, 8.4% of which was argon with an A^{40}/A^{38} ratio of 31.2, as compared with an A^{40}/A^{38} ratio of 1581 for normal argon. This was a total of 0.118 ml of argon, or 0.00084 ml/cm^2 (0.00364 ml per square centimeter of projected area).

The strip in the A^{36} pocket gave a yield of 0.27 ml of gas, 3.2% of which was argon with an A^{40}/A^{36} ratio of 1.54, compared with a normal ratio of 296. This was a total of 0.0086 ml, or 0.00006 ml/cm^2 (0.00026 ml per square centimeter of projected area); the strip was evidently not saturated.

In a search for the best material for the adsorption of ions, a series of runs was made in which data were taken from 53 different collections on targets of various materials. Efforts were made to keep operating conditions during reception as nearly the same as possible. The procedure followed in each case was about as follows: Before each run, all targets to be exposed during the run were placed in a vacuum system and baked at temperatures at least as high as those at which they were later to be outgassed. Several targets were then placed in the receiver, each on a water-cooled plate, and the receiver and the proper source unit were put in the vacuum chamber of the 48-in. separator for a run. A beam of approximately 3 ma was allowed to impinge on each target for 10 or 15 min, which was more than enough to ensure saturation. Individually, then, each target was placed in the vacuum system (Fig. 1) and outgassed at approximately 750°C for 10 to 15 min or until no more gas seemed to evolve. This gas was then taken to the mass spectrometry laboratory for analysis, and the per cent of argon present was determined. The argon recovered from the target was calculated in terms of the number of milliliters collected per square centimeter.

The results of this series of runs are given in Table 1. The first column lists the type of target material used, and the following columns show the amount of gas recovered per unit area from a target of this material under the various circumstances. In run I, the targets were 1.4 × 4 in. and were placed behind slots of the same size. Here the target and defining slit were large compared with the spread of the ion beam at the receiver, and no intentional scanning of the beam across the target was carried out. This probably explains why the collected quantities were low. If the beam width is considered to be of the order of $^1/_4$ in., then these values should be increased by a factor of 3 or 4, and they will be near the succeeding values. In the second run the targets were behind slots $^1/_8$ in. (measured on a plane normal to the beam) by 4 in.; only the area behind the slot was used in the calculation, namely, $^3/_{16}$ × 4 in. The same arrangement was used in runs III, IV, and V, some of the metals being repeated and some new ones being added. Since the values varied so much, it was felt that perhaps gas was being adsorbed by portions of the target other than those actually being struck by the beam and that this scattered retention varied among targets. Therefore some of

Table 1. Quantities of Gas Per Unit Area[a] Recovered From Saturated Targets of Various Materials

Target Material	Run I[b]	II	III	IV	V	VI[c]	VII[d]
Silver	0.00062	0.00202	0.00202		0.00170	0.00062	
Stainless steel	0.00015			0.00248		0.00294	0.00124
Copper	0.00046	0.00232	0.00279		0.00170	0.00108	
Molybdenum	0.00139			0.00403			0.00124
Monel	0.00062	0.00046	0.00310	0.00341	0.00186		0.00108
Hastelloy	0.00077	0.00170	0.00294				0.00186
Nickel		0.00481	0.00977		0.00310	0.00186	0.00124
Aluminum		0.00449	0.00186		0.00790	0.00589	
Brass		0.00248	0.00139		0.00201	0.00124	
Inconel			0.00248		0.00248	0.00356	
Tantalum				0.00232			0.00031
Advance metal				0.00573			0.00046
Graphite				0.00899		0.00418	
Tungsten				0.00186			0.00031

[a]Quantities are listed in ml/cm^2 converted to STP.
[b]Wide slot.
[c]Trimmed target.
[d]Neon.

the targets were now trimmed to the exact size of the defining slits and were used in run VI. In run VII, the conditions were much like those in runs II, III, IV, and V, but with neon as the ion beam. The yields with neon were all low, and it is believed from postrun observation of the targets that the beam intensity must have been very weak on half the target (because of poor ionization characteristics in the ionization chamber of the source during operation). Although the values listed in Table 1 vary greatly, in general they agree quite well with those observed at 60 kv by Koch.[7]

Since these targets were merely fastened to water-cooled plates with four screws, the temperature may have varied greatly during the reception. To check the effect of water cooling, a special receiver was constructed, which consisted of eight defining slits ($\frac{1}{8}$ by 4 in.) behind each of which was placed a $\frac{1}{4}$-in. copper tube acting as a target. In alternate tubes, cold water was circulated, while the others were operated without the use of a coolant. The effective area of the target was considered to be equal to the area of the defining slit, as measured in the plane of the defining face of the receiver. The targets were treated in the same manner as the previous flat targets, and the amounts of the gas recovered are tabulated below:

Target No.	Cooling	Argon (ml/cm^2)
1	No	0.00079
3	No	0.00076
5	No	0.00064
7	No	0.00057
2	Yes	0.00367
4	Yes	0.00124
6	Yes	0.00167
8	Yes	0.00155

The data show very conclusively that water cooling increases the ability of the target to retain the gas under ion bombardment.

[7]J. Koch, *Nature* 161, 566 (1948).

The search for a more flexible system, and one suitable for the retention of large amounts of gas, led to the design and construction of a prototype receiver in which oil was used as the gas absorber. This unit, for the small-scale operation in the $3\frac{3}{4}$-in.-radius equipment mentioned earlier, is shown in Fig. 2. It embodied a horizontal rotating drum, the lower portion of which dipped into oil, and a wiper at the top of the drum to remove the oil that had been exposed to the beam. The drum was placed behind a defining slit, and 1- to 2-kev argon ions were allowed to impinge upon the oil film on the drum. Diffusion pump oil, one of the silicone oils, and Octoil were exposed to the beam in different runs and then were outgassed in the apparatus previously mentioned. Analyses with the mass spectrometer indicated that argon was being collected at these low energies but that the amounts were small compared with the quantities absorbed when argon was simply bubbled through the oil. Furthermore, decomposition products formed during the run and/or during the subsequent outgassing made the analyses difficult. These impurities would also make gas purification more of a problem.

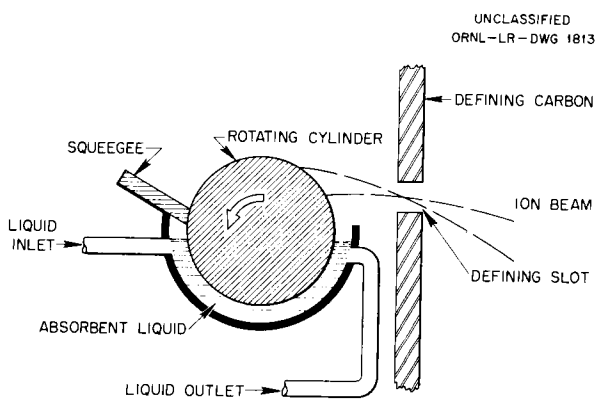

Fig. 2. Rare-Gas Receiver with Liquid Absorbent.

With the idea of using this same sort of equipment for liquid-metal absorbers such as gallium or some low-melting alloys, several checks were made on the solubility of argon in molten gallium. The metal was first completely outgassed in a vacuum. Then argon gas was allowed to come into contact with gallium at a few degrees above its melting point (30–35°C), being shaken up with it or bubbled through it. Since, in use, molten gallium would have to retain argon in a vacuum, the argon-treated gallium was then placed in the vacuum system and evacuated while the metal was molten. It was now isolated and outgassed at approximately 700°C. The gases evolved were analyzed as previously in the mass spectrometer. Hydrogen was predominant, and the quantity of argon in the gas mixture varied in several attempts from about 1% to several per cent. The total amount of argon outgassed from approximately 80 g of gallium varied from 0.02 to 0.1 ml. Therefore gallium did not seem to be very promising for calutron collection purposes.

In order to establish the practicability of increasing the receiving area for inert-gas ions by the technique of allowing the impinging beam to fall on a surface at an oblique angle, a special receiver pocket was designed which could hold about 31 graphite or metal "foot scrapers," little rectangular targets set at an oblique angle with the normal beam. These little targets were $\frac{1}{32}$ in. thick and about $\frac{11}{16} \times 2\frac{3}{4}$ in. and were set at about a 5-deg angle with the normal beam. The total area toward the beam was approximately 60 in.^{2}. The photograph, Fig. 3, shows such a pocket with a set of the foot scrapers installed. A defining face of graphite in front of this pocket contained two $\frac{1}{4}$-in. slots spaced $\frac{1}{4}$ in. apart. This would give a means for determining the location of the beam so that it could be shifted up and down for receiving first in one slot and then in the other to ensure distributing the reception.

For the first of this series of runs, a receiver was constructed with two such pocket and defining-slot arrangements, the upper one containing foot scrapers, and the other, although identical, containing no foot scrapers. About 2 ma-hr were received in each pocket at the rate of approximately 3 ma. The foot scrapers from the first pocket were outgassed and analyzed in three different groups, and each group was given several outgassings so that all the gas could be handled and accounted for. (During this series of runs a more complete gas-handling system was developed, and a method was worked out for a more satisfactory cleaning of the gases. Both will be explained more fully in a later portion of this report.)

The total yield of argon from the first pocket was 0.165 ml (see Table 2). The second (lower) pocket was broken into pieces and outgassed, yielding 0.077 ml. Obviously the extra surface allowed for the entrapping of more gas, as was seen with the plaited silver strips. However, the total gas per

Fig. 3. Receiver Pocket for Argon.

Table 2. Summary of Gas Yields from Foot-Scraper-Type Collectors*

Collector	Yield [ml (STP)]			Yield (ml/cm^2)	
	K Half	Anti-*K* Half	Total	Actual Area	Projected Area
First receiver					
Graphite foot scrapers**	0.087, 0.033, 0.045		0.165	0.00043	0.00635
Broken-up pieces of graphite pocket, no foot scrapers			0.077		
Second receiver					
Graphite foot scrapers	0.108	0.041	0.149	0.00039	0.00573
Third receiver					
Copper foot scrapers	0.121	0.050	0.171	0.00045	0.00666
Aluminum foot scrapers	0.128	0.076	0.204	0.00053	0.00790
Broken-up pieces of pocket which had contained the aluminum foot scrapers			0.075		No projected area
Control, no reception					
Graphite strips			0.01		
Aluminum strips			0.01		

*Receiver pockets containing a series of targets set at an oblique angle with the 0-deg beam.
**See text.

unit area (actual area facing the beam) was 0.00043 ml, which is less than the average quantity retained from a beam on the previous metal target surfaces and less than the amount per unit area collected on the plaited silver strip receiving the A^{40} beam. An immediate question is whether the retaining ability of the target is proportional to the projected area only. This would make the value for the first silver strip 0.00387 ml/cm^2 and the value for the graphite foot scrapers 0.00635 ml/cm^2. (The values in Table 1 need to be multiplied by 1.414 to obtain the amounts per square centimeter of projected area, since the targets there were mounted parallel to the defining faceplate, which is at a 45-deg angle to the normal beam.)

In succeeding runs, graphite, copper, and aluminum foot scrapers were used in a manner similar to that discussed above. Two control runs, one in which graphite strips and the other in which aluminum strips, not exposed to the beam, were outgassed, gave very low yields of argon. From Table 2 it can be seen what the yields from aluminum and copper targets were. In each case the gas was recovered from two portions of the pocket, and that portion designated as the *K* side gave yields consistently about twice those of the anti-*K* side. (The *K* side corresponds to that side of the source from which the ionizing electrons originate.) The characteristics of the ionization within the arc chamber were probably such as to give a more intense beam on the *K* side. This means that the quantity of retained ions per unit area could have been increased if different operating conditions were achieved. The graphite pocket which had contained the aluminum foot scrapers was broken into pieces and outgassed, giving a yield of 0.075 ml. The pocket wall surfaces either were shielded by the foot scrapers or else were nearly parallel to the 0-deg beam, so that the pocket itself had no projected area.

The yields per unit of actual area of the foot scrapers are small compared with the amounts collected on previous flat targets, but except in the case of graphite the quantities of gas retained per unit of projected area are rather large compared with the average amounts previously collected on targets set at larger angles. This is a useful fact. However, the total amount of adsorption is still very definitely limited because the distance between the focal points of the adjacent isotopes of any one element is fixed and relatively quite small and because the impinging beam is focused on the receiving slot from a relatively large range of angles.

Another run was made in which aluminum foot scrapers were placed in one pocket, while 12 g of magnesium ribbon was placed, loosely wadded up, in the second pocket. A beam of A^{40} of about 10 to 12 ma was received in each pocket for about a half hour. The postrun inspection showed that the aluminum had largely melted where the beam was most intense and that the magnesium had been sputtered over the inside of the receiver. The argon yield, after cleaning up the gas upon recovery, was less than could be detected on the manometer of the gas-handling equipment (<0.01 ml). At these reception rates, the target needed to be cooled to be of any practical value.

COLLECTIONS UTILIZING METAL VAPORIZATION AND CONDENSATION

The results described above, plus inspections made after these and other separator runs, indicate a great deal of erosion and suggest that a certain amount of sputtering of target material takes place, continuously exposing new areas to the incoming beams. Therefore it is immediately suggested that a method of continuously renewing the surface of the target is needed. One method of doing this would be to evaporate a suitable metal in the vicinity of the target and to allow it to continuously or periodically condense onto the same target that is receiving the isotopic beam. Such a system, if the metallic evaporator could be kept compact enough, would lend itself nicely to the receiver design and might be capable of functioning over extended periods of time.

Aluminum looked like a good metal to evaporate, on the basis of the experience gained here plus the fact that it is light and is less apt to be sputtered from the target under ion bombardment. Also, considerable work had been done with alumimum, possibly making less preliminary work necessary.[8]

If the reception rate is 10 ma, the area of the target 65 cm^2, and the saturation value 0.00220 ml/cm^2, then the surface would need renewal about once per minute. If it is assumed that 100 atomic diameters of material is needed to effectively renew the surface, which is probably many times more than is actually necessary, then approximately

[8] J. Strong, *Procedures in Experimental Physics*, p 171, Prentice-Hall, New York, 1938.

5.4×10^{-4} g would be required for each such renewing, or approximately 1×10^{-5} g/sec. If the evaporating temperature is somewhere between 1000 and 1150°C,[9] which places the vapor pressure of the aluminum in the 10-μ region recommended by Strong[10] for making mirrors, the rate of evaporation from a square centimeter of surface would be 8×10^{-5} g/sec. On the basis of continuous evaporation, a source having a square centimeter of evaporating surface would give approximately eight times the estimated requirement. There would be a correspondingly smaller amount if a smaller surface area were available from which the aluminum could originate. Using the above figures, about 0.3 g/hr would be needed, which would mean a total of 30 g if it were desired to have a run last for about 100 hr. It seemed logical to believe that the above requirement could be cut by a factor of 10 to 100, making the required amount of metal very reasonable, providing the evaporation rate could be determined and controlled fairly well. One or more heating filaments could be strategically located in the receiver in order to continuously or periodically evaporate the aluminum, which would condense on the same water-cooled target on which the gas ions were being collected.

In an independent vacuum system of the bell-jar type, many runs were made with different types of filaments for vaporizing aluminum. It was soon learned that, because of alloying, variation of the wetted surface area, and other physical changes during evaporation, reproducibility of evaporation rate would be very difficult. With equipment in a bell jar, where the plating onto a target or onto the walls of the jar could be observed, the temperature could be adjusted to allow for changes in the filament characteristics. Even here, it was very difficult to control the rate so that evaporation was assured and at the same time to keep it low enough to allow the aluminum charge to last any more than 1 or 2 hr. In the separator, during operation, some special technique would be necessary to optimize the evaporation rate.

Various tungsten and tantalum wire filaments were tried, including the arrangement of braiding three tungsten wires together.[11] The most promising arrangement was that of a hollow tantalum filament, made of 0.280-in.-dia thin-walled tubing $5\frac{3}{8}$ in. long and pinched together on each end. A slot about $\frac{1}{16} \times 4.0$ in. was cut for the vapor exit. This hollow filament could be charged with 6 or 7 g of aluminum and was of such a size and shape that it would lend itself nicely to the receiver design. The filament was heated in the bell jar with a low-voltage, high-amperage power supply. The optimum evaporating current varied in different runs from 180 to 200 amp at approximately 2 v, yet, at any one setting, a difference of 5 amp made quite an appreciable difference in the evaporation rate. In one run, the current was held to approximately 150 amp between pulses and then pulsed to about 200 amp for 30 sec once every few minutes; the aluminum charge lasted for about 30 individual pulses. Each pulse obviously evaporated more metal than was necessary, but this amount of current was required to ensure vaporization every time. The metal would melt, creep out the exit slit, wet the outside, and then vaporize from the outside surface. The surface from which the metal evaporated changed, as did the resistance of the filament. The lifetime of the metal charge would have to be longer by about an order of magnitude if it were to last through a run.

Magnesium was the next metal that was evaporated. It seemed to have all the advantages of aluminum, and also would sublime directly in a vacuum. Since the magnesium would not wet the surface, perhaps better control over its vaporization rate could be obtained. A miniature furnace was constructed, which consisted essentially of two concentric stainless steel tubes, with appropriate vapor slots, between which were sandwiched a winding of Chromel-A heater wire and mica insulation. The required electrical power was supplied from a 110-v line and was controlled by a Variac. The over-all dimensions of the furnace were approximately $\frac{3}{4}$ in. OD $\times$ 4 in. long. The heater unit consisted of 42 turns of 28-gage wire with a total resistance of about 25 ohms. A thermocouple was placed between the walls to monitor the temperature. After several trial runs and some minor modifications, it was learned that it was necessary to heat the furnace to a temperature somewhere in excess of 500°C to be sure that sublimation had started. The best operating temperature, however, seemed to be about 480 to 490°C, at which the rate of evaporation was 0.7 to 1.0 g/hr. This rate was ten times that desired, but a temperature this high was necessary to ensure

[9] S. Dushman, *Scientific Foundations of Vacuum Technique*, p 748, Wiley & Sons, New York, 1949.

[10] J. Strong, *op. cit.*, p 168.

[11] J. Strong, *op. cit.*, p 175.

that evaporation was taking place. It was believed that the magnesium would last for a sufficient length of time to make a good trial run in the separation facilities.

A target was constructed from six lengths of flattened $\frac{3}{8}$-in. copper tubing arranged so as to give an exposed surface approximately $2\frac{3}{4} \times 7.0$ in. The arrangement of the target, furnace, and beam-defining face can be seen in Fig. 4. The furnace was loaded with 5.3 g of magnesium, and the receiver was installed, along with an appropriate source unit, in the 24-in.-radius calutron for the collection of A^{40}. A 3-ma beam was maintained on the target for $2\frac{1}{2}$ hr while the furnace was held at approximately 490°C. At the end of the run, the magnesium was gone; it probably had been exhausted for some time. It was found that the magnesium could be scraped easily from the target in the form of small flakes, which were placed in the gas-handling equipment and were outgassed in two different batches. The gas from each batch was cleaned of impurities in a manner which will be explained later and was analyzed with a mass spectrometer. The monitored beam of $7\frac{1}{2}$ ma-hr represents about $6\frac{3}{4}$ ml of gas. A recovery of 2.4 ml (STP) of argon was made, which constitutes approximately 38% of the monitored beam. The isotopic analysis shows an enhancement which proves beyond any doubt that the gas came from the ion beam in the separator:

A^{40}	99.99 ± 0.01%
A^{38}	0.008 ± 0.005%
A^{36}	0.005 ± 0.002%

The average concentration of gas per unit area, 0.01938 ml/cm^2, shows that the method is effective. The recoveries from the two batches indicated that the concentration of gas per unit area was not uniform; thus if the maximum concentration per unit area could be attained uniformly over the entire target area, many times this average concentration would be possible.

Fourteen different miniature furnaces were built, and many runs were made on each in the bell-jar vacuum system in an effort to get a combination which would give positive vaporization of magnesium at such a rate that the charge would last for 50 to 100 hr. Copper, brass, stainless steel, lava, and graphite were tried for the main bulk of the furnaces, with sometimes a liner or heat shield of stainless steel. A thermocouple was attached to each furnace either by placing it in a well or by welding it to one of the walls. Various sizes and shapes of openings were used for vapor ports. The charge of magnesium metal was pretreated by

UNCLASSIFIED
ORNL-LR-DWG 7984

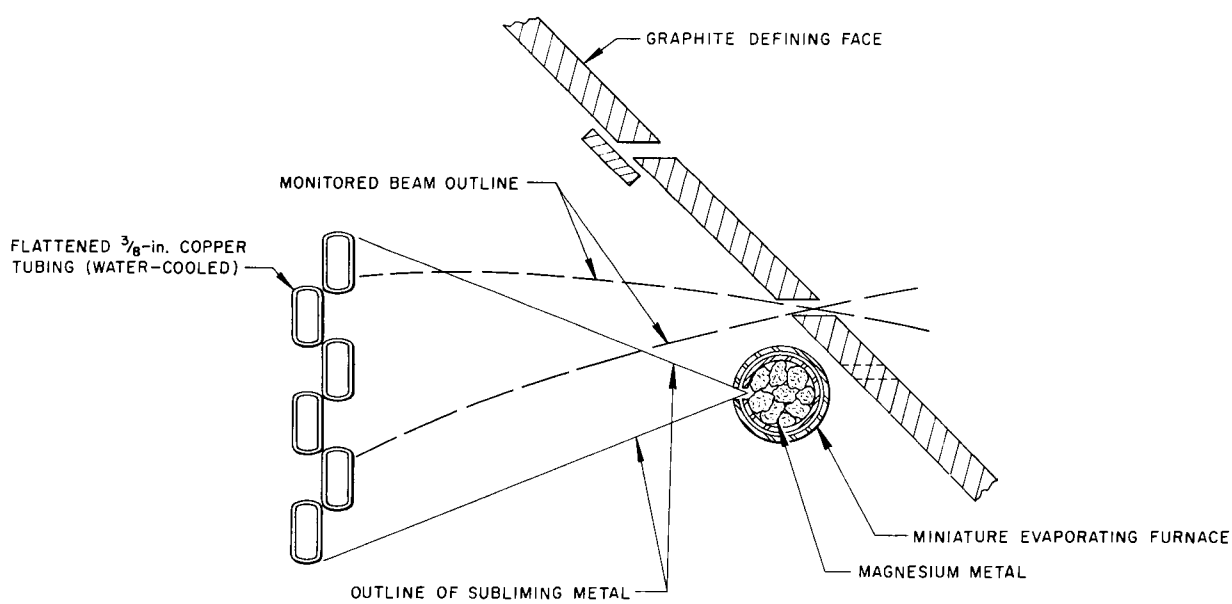

Fig. 4. Electromagnetic Separator Receiver for Gases.

various methods, such as cleaning with hydrochloric acid or rinsing with acetone. In several runs an effort was made to purposely nitride the surface of the metal. Magnesium pieces of different sizes and shapes were used for some of the charges; for others, metal was melted and poured into the furnace, or melted after it was put into the furnace. None of these arrangements seemed suitable for use in a separator receiver, mostly because the same vaporization rate was not obtained when the run was repeated at the same temperature. The best of these furnaces did perform in a manner very close to that which was desired. This furnace consisted of a copper block $\frac{3}{4} \times 1\frac{1}{4} \times 4$ in. Two holes were drilled lengthwise in this block, $\frac{7}{16}$ in. and $\frac{1}{2}$ in. in diameter. A 100-w G-E cartridge heater was removed from its brass case, set in the $\frac{7}{16}$-in. hole, sealed in with Sauereisen cement, and baked overnight at 500°C. The other hole was used for the charge and was threaded for a stainless steel cap. The cap was lubricated with Aquadag to keep it from sticking. A thermocouple was placed in a small well drilled into a corner of the block. The vapor port was made with a No. 2 twist drill 0.221 in. in diameter. This furnace could hold 10 g of magnesium, which, if the rate of evaporation could be held at 0.1 g/hr, would suffice for 100 hr of collection. The entire unit was encased in a 0.005-in. stainless steel heat shield.

In making the runs, the temperature was brought up until condensation could be seen on the walls of the bell jar. Then the temperature was reduced to a somewhat lower value, and the sublimation rate was judged by the plating of metal on the walls of the bell jar. A shield which could be manipulated from the outside of the vacuum system was moved as desired to expose a clean portion of the glass wall periodically. The lowest temperature was noted at which sublimation could be observed, and then the furnace was operated at this temperature for several hours. This lowest temperature varied from 390 to 460°C. Weighing of the furnace before and after the run gave the amount of material lost. The average rate of evaporation varied from 0.04 to 0.9 g/hr; usually it was approximately 0.5 g/hr. The lowest temperatures did not necessarily give the lowest rates.

The rates of evaporation from the miniature furnaces were almost low enough to permit adequate life of the charge, but monitoring with a thermocouple or with an ammeter was not satisfactory. If such a furnace were to be operated in a separator, better control of the evaporation rate would be necessary.

Another method suggested for monitoring the evaporation rate was measurement of the intensity of the beam of magnesium atoms. However, known methods of measuring atomic or molecular beams are either too delicate to lend themselves readily for use in a separator receiver or require elaborate equipment.[12,13] Several modifications of the Philips ion gage were tried as a device for measuring the beam coming from the furnace, but none were satisfactory.

In one of the furnaces a special heated vapor port was employed in addition to the regular heater to act as a door to allow the vapors to come out each time the special heater was operated. The arrangement was bulky, and the special heater was soon shorted out.

Other methods of vaporizing magnesium metal were tried. These methods included the following: heating a rod of metal by passing current through it; heating by contact resistance, one of the electrodes being made of magnesium; heating a rod or bar of magnesium by radiation from a nearby coil; passing a high-voltage spark across a gap, one electrode being of magnesium; and electron bombardment of a rod or bar of the metal. A hollow tantalum filament similar to that previously used, but loaded with magnesium oxide, gave a good output of magnesium vapor, the tantalum reducing the magnesium oxide when nearly white hot. All these methods were successful in the vaporization of magnesium, but in none of them was the rate reproducible by any fairly simple and straightforward method of monitoring.

With the method of electron bombardment, it was planned that a heated filament be used as an electron source. A magnesium rod or block, suitably positioned and insulated to maintain a high potential, would be bombarded by electrons. Evaporation would be accomplished by the heat of bombardment each time the high voltage was turned on. The high voltage could be turned on and off periodically at such a rate as to control the vaporization.

---

[12] R. W. Ditchburn and J. C. Gilmour, *Revs. Mod. Phys.* 13, 310 (1941).

[13] I. Estermann, *Revs. Mod. Phys.* 18, 300 (1946).

It was found that after the temperature necessary for emission of electrons was reached, the heat radiated by a fairly large filament was itself sufficient to cause the rod of magnesium to sublime. In several runs a tungsten filament composed of 0.015-in. wire wound into a multiturn coil failed to emit sufficient electrons to heat the magnesium. However, a straight filament of 0.170-in. tantalum rod and a coil of 0.040-in. tantalum wire of four turns wound on about a $\frac{1}{4}$-in. dia were both excellent sources of electrons. A $\frac{1}{8}$-in. magnesium rod, operated at a few hundred volts dc, was used as the target. The tantalum filaments had to be operated at nearly white heat, which, it was soon learned, was sufficient to cause the magnesium rod to sublime. The vaporization rate was greater with the high voltage on, but the electron bombardment was superfluous, since the same job could be done without it. In fact, when a magnesium ribbon was substituted in place of the rod, the temperature of the filament could be reduced to the yellow region, with sublimation fast enough to be entirely satisfactory.

This result suggested that the vaporization of the magnesium might be regulated easily if the metal, in the form of rod or ribbon, were fed into a vaporizer at a controlled rate. However, methods of ribbon or rod advancement are restricted by the characteristics of the separator receiver. The receiver operates in an evacuated chamber, where space is limited; it is located in a d-c magnetic field; and it is designed to be adjustable, during operation, in two directions, as well as to be rotatable on its axis of support. Designs for motors, solenoids, or armatures to operate in the magnetic field would be complicated by the fact that the field must be varied from one run to the next for processing different elements. Such equipment might also cause field distortion and thereby interfere with proper isotope separation. A driving motor operated outside the field would be outside the vacuum, and the operating mechanism would be complicated due to the vacuum seal and the necessary receiver adjustments.

An idea for a mechanism which obviated all these difficulties was conceived, and some preliminary experiments showed that it would work very satisfactorily. This mechanism is shown schematically in Fig. 5. The driving unit consisted of a bellows, mounted in the receiver, which could be expanded and contracted by means of a vent line running to the outside of the vacuum system. The vent line was of the flexible type, allowing full freedom of adjustment of the receiver, and was connected to a three-way solenoid valve operated by an electrical time delay which automatically reset itself after timing out and actuating the valve. A difference of pressure was brought about by connecting a 15-psi air supply at *A*, leaving *B* open to the atmosphere, or by leaving *A* open to the atmosphere and connecting *B* to a small mechanical vacuum pump. In practice a more flexible arrangement, which allowed some necessary adjustments to be made during a run, was to connect a vacuum at *B* and an adjustable pressure supply at *A*. The back-and-forth motion of the end of the bellows actuated a ratchet mechanism which drove a knurled wheel. An idler wheel rested against the knurled wheel, and the magnesium ribbon was threaded between them. Each click of the ratchet pushed the ribbon forward, through a guide tube, and into the center of the tantalum heating filament. The ribbon was pulled through another guide from a reel designed to hold the commercially available 1-oz roll of 0.008×0.125 in. magnesium ribbon.

Figure 6 is a photograph illustrating how this equipment was mounted in the calutron receiver. Here the defining face has been removed to show the parts just mentioned, plus the flattened copper water tubes which were used as a target for A^{36}, and the graphite plate used as a target for A^{40}. Figure 7, taken with the faceplate in place, shows the $\frac{1}{4}$-in. slot for A^{40}, the $\frac{1}{8}$-in. slot for A^{36}, and the window for observing the functioning of the moving ribbon during operation.

After the equipment was built, several trial runs were made in the vacuum test dock (a large vacuum chamber for checking the vacuum tightness of receivers and sources for the separators). The first unit was constructed with a hollow filament made from a section of tantalum tubing. A rectangular hole was cut in the side of the filament toward the cooled target to roughly define the beam of magnesium vapor. The holes where the tube was clamped in place in the big bus bars feeding current to the filament can be seen in Fig. 6. The hollow filament was unsatisfactory because the cold ends, clamped in the bus bars, caused the condensation of vapor which soon plugged up the tube and stopped the ribbon advancement. Little extensions were then screwed to the bus bars so that a coiled wire filament could be mounted rigidly. This was a five-turn coil of 0.040-in. tantalum wire wound on a $\frac{1}{4}$-in.-dia mandrel.

UNCLASSIFIED
ORNL-LR-DWG 18770

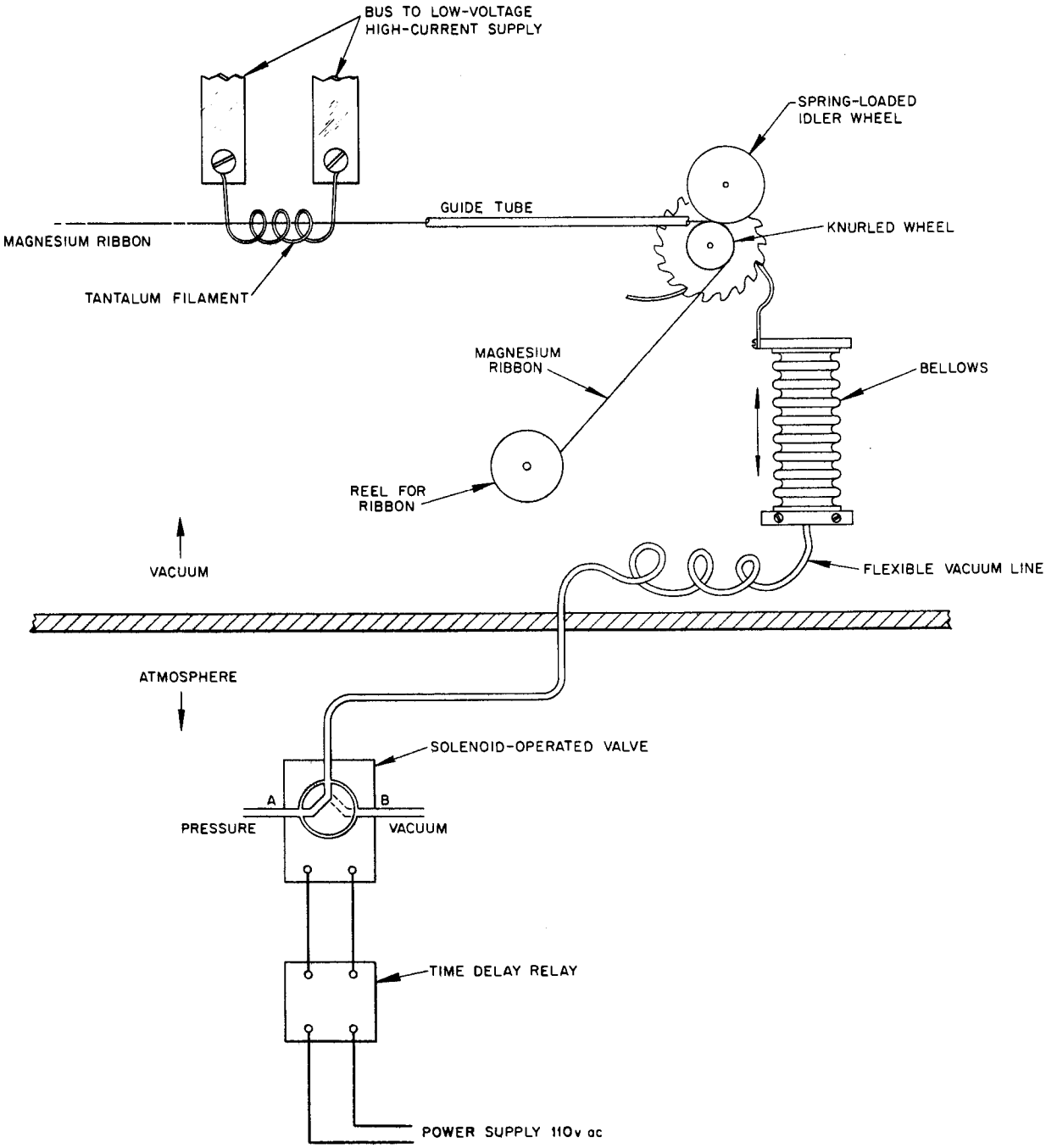

Fig. 5. Schematic Diagram of Bellows-actuated Ribbon Advancer.

Fig. 6. Argon Receiver with Magnesium Vaporizer (Faceplate Removed).

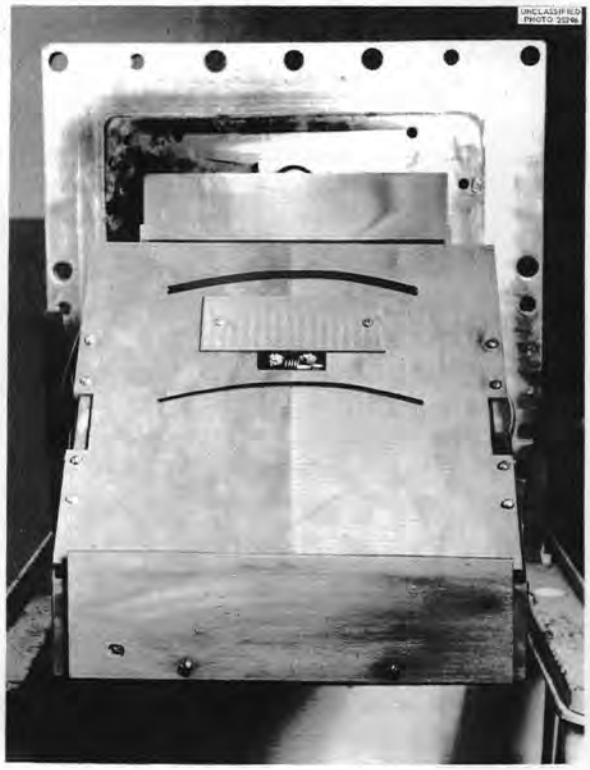

Fig. 7. Argon Receiver with Magnesium Vaporizer (Faceplate in Position).

During preliminary operation in the vacuum dock, magnesium would not condense on the cooled targets because oil vapor from the diffusion pumps had condensed there. However, when pieces of mica or graphite were laid over these surfaces, condensation was satisfactory. Since this trouble had not been encountered with the miniature furnace, it was assumed that no trouble would be encountered in actual operation.

At times during the trial runs, as well as later, a flicker occurred on the filament ammeter, coincident with the click of the time-delay relay and the advancement of the ribbon. This seemed to be more consistently true when the ribbon touched the filament with each advance, instead of going exactly into the center of the coil. Sometimes the ion-gage meter would flicker at the same time, but neither of these phenomena could be relied upon. To permit ascertaining whether the ribbon was advancing properly, a window was cut in the graphite defining face so that the mechanism could be observed, during operation, through the receiver window in the electromagnetic separator.

The runs in the separator were started with targets made of flattened copper tubing for both the A^{40} beam and the A^{36} beam. During an inter-run examination, it appeared that the 10 ma or so of A^{40} being received might soon erode through the copper tubes, so a graphite plate was substituted as the target for this more abundant isotope, as seen in Fig. 6. No effort was made to collect the very rare A^{38} isotope. About a dozen short runs were made with this equipment, terminations being brought on by various failures of the ribbon-advancement equipment. The first troubles were caused by the motor action of the filament, which was being heated with approximately 30 amp ac in the d-c calutron magnetic field. This effect made the filament skew out of place when it became hot and soft. This problem was solved by changing to a d-c power supply and by proper orientation of the coil winding with respect to the poles of the magnetic field. Condensation of the magnesium on the end of the ribbon guide caused considerable trouble and was usually the limiting factor in the length of the run. Proper size, shape, and distance

from the coil improved this situation somewhat.

During these runs in which the ribbon advancer was being perfected, a total of 1.87 ma-hr (1.56 ml) of beam was monitored on the A^{36} target. The total recovery, after cleanup, was 0.96 ml, which is 61.5% of the monitored value. This was recovered by first scraping the magnesium from the copper tubes. The flakes obtained were then outgassed in two batches, each batch being outgassed twice. The first batch, from the lower four copper tubes, was first outgassed at approximately 600°C for only about 5 min, with a yield which proved to be most of the gas from this batch. Later, at 750 to 800°C or more, and for several times as long a period, more argon was released which was not enhanced as much as the first. The second batch came from the top four copper tubes, on which the beam was more definitely defined, more intense, and closer to the 0-deg beam. The argon from this batch showed a greater enhancement. The second outgassing of this portion did not yield much more gas. The recovery of argon from this first series of runs with the magnesium ribbon advancer can be seen in the following data:

Portion of Target	Quantity of Argon [ml (STP)]	A^{36} (%)
Top four copper tubes		
First outgassing	0.39	36.4
Second outgassing	0.02	21.0
Lower four copper tubes		
First outgassing	0.45	11.6
Second outgassing	0.10	5.1

The copper tubes themselves, after the magnesium had been scraped off, were outgassed, and the gas was cleaned up as in the other runs. The yield of argon, if any, was too low to be measured on the system manometer.

The ribbon-advancer mechanism was rebuilt, with the design streamlined a little, and a special pocket was constructed for the A^{40} beam to check the possibility of collecting ions on a surface to which they have been reflected after the initial impact. Figure 8, a photograph of this equipment, shows the receiver with the defining face removed. The A^{40} beam falls at an oblique angle on the lower plate of the large pocket. This plate is of ¼-in. magnesium, with copper tubes for water cooling, and is fastened to the under surface by Heliarc welding. The copper top plate, which is bent over on the front, forms a semienclosed pocket

Fig. 8. Argon Receiver with Magnesium Vaporizer (Magnesium Plate for A^{40}).

and can be seen with the curve cut in it to conform with the beam pattern. It was believed that magnesium sputtered by the A^{40} beam from the lower plate to the top plate would be instrumental in entrapping reflected ions. A new target of flattened copper tubes was constructed for the A^{36} beam.

With this equipment, a run was started which lasted for 43 hr of trouble-free innage. During this time, the ribbon was slowly advanced and vaporized for only 5 min out of each 30, which was calculated to give more than sufficient metal for adsorption of the A^{36}. The run was terminated to inspect the receiver, although no failure had occurred. The magnesium plate, upon which the A^{40} beam had been impinging at about 27 to 28 ma, showed considerable erosion but looked as though it should last for another 40 hr or so at the same rate of reception. The A^{36} target looked bright and shiny. A little condensed magnesium was cleaned from around the filament, and some loose flakes were removed from the A^{40} pocket for analysis; otherwise, no changes were made. The receiver was reinstalled in the separator, and innage was continued until, at a total of 98 hr of innage, there was some question as to whether

the ribbon advancer was working properly. Post-run inspection showed no apparent trouble. Considerable magnesium had sputtered and condensed on the copper (top) portion of the A^{40} pocket, and many loose flakes lay on the bottom plate. The A^{36} target still appeared shiny except where the beam had evidently been the heaviest, at the center of the top four tubes.

The magnesium was scraped from the top four copper tubes of the A^{36} target as before, and the yield of the first outgassing again was so great that the gas was cleaned up and removed before the second outgassing at a higher temperature, which was continued until no more gas seemed to be forthcoming. The lower four tubes were treated in a similar fashion. The results of the four outgassings, after cleanup, are listed below:

Portion of Target	Quantity of Argon [ml (STP)]	A^{36} (%)
Top four copper tubes		
First outgassing	0.80	69.3
Second outgassing	0.75	70.5
Bottom four copper tubes		
First outgassing	0.12	19.2
Second outgassing	0.28	15.2
Total	1.95	

The total monitored A^{36} for the 98 hr was 5.31 ma-hr (4.44 ml). Since some of the gas was believed to have been lost accidentally in the second outgassing of the four top tubes, the recovery (1.95 ml) was greater than 43.9% of the monitored beam. As before, the best isotopic purity was received from the top half of the target, which averaged 69.9% A^{36}.

The total monitored A^{40} beam for the 98 hr was 2354 ma-hr (1968 ml). Approximately 10 g of loose flakes was scraped out of the pocket. Then a somewhat smaller amount of magnesium was removed from the copper plate by thoroughly scraping the surface with a knife. The magnesium plate was first scraped with a knife, and then about $\frac{1}{8}$ in. of material was removed from the whole surface with an electric rotary file to see how much argon had penetrated more deeply. The material was outgassed in about ten different batches, some of them in several stages, so that the relatively small gas-handling system would be capable of cleaning all the impurities out of the recovered argon. The recovery figures are summarized below:

	A^{40} [ml (STP)]
Loose flakes from pocket	48.9
Flakes scraped from copper plate	59.5
Flakes from magnesium plate	5.4
Rotary filings from magnesium plate	4.7
Total	118.5

The total recovery of A^{40} represents 6.1% of the monitored beam. The data indicate that a large part of this was entrapped in the sputtered magnesium upon reflection from the lower plate. Several representative samples were checked for isotopic assay. The A^{40} varied from 99.93 to 99.99% of the total argon. The following analysis of a sample from some of the loose flakes was typical:

A^{40}	99.985 ± 0.001%
A^{38}	0.0017 ± 0.003%
A^{36}	0.014 ± 0.001%

GAS-HANDLING AND CLEANUP SYSTEM

The first technique tried in connection with cleanup was that of putting a piece of lithium in the recovery system (Fig. 1) and heating it after outgassing the targets. In this case, high-frequency induction heating was useful in that the heat could be localized as desired, but in most of the outgassing it was found that heating with an acetylene torch was just as satisfactory.

After some of the graphite foot scrapers had been outgassed, the gas mixture was subjected to lithium vapor, and a sample was analyzed with the mass spectrometer. In Table 3 this sample is compared with two samples which had not been exposed to lithium vapor; one of these was from targets which had been bombarded with argon ions in a collection run, and the other was from a like number of pieces of graphite which had not been run in the separator. The lithium seemed to reduce the amount of hydrogen but apparently introduced methane and other hydrocarbons in the 28 to 44 mass region. The hydrocarbons probably came from the oil in which the metal had been stored, even though an attempt was made to degrease the metal before use. By immersing the sample bottle

Table 3. Effect of Cleanup by Lithium Vapor on Compositions of Gas Mixtures Recovered from Graphite Targets

Component	Per Cent		
	Control, No Calutron Reception or Cleanup	Targets with Calutron Reception, No Cleanup	Targets with Calutron Reception and Lithium Cleanup
H_2	27.6	26.9	4.7
CH_4	10.0	18.4	35.3
H_2O		0.4	4.9
N_2, CO	44.0	38.4	21.2
O_2	0.2	2.5	
A	0.2	0.8	1.6
CO_2 + hc*	18.0	12.7	32.3

*Hydrocarbons in the 28 to 44 mass region.

in liquid nitrogen, the hydrocarbons could be reduced but not eliminated.

According to Dieke and Crosswhite,[14] activated uranium is an effective getter, removing any impurity from a rare-gas discharge except another rare gas. To see if activated uranium would be adaptable for use here, about 2 g of uranium was activated according to the method of Dieke and Cunningham.[15] The uranium, in small pieces, was washed in nitric acid, rinsed, dried, and placed in a quartz tube attached to the outgassing system, Fig. 1, by appropriate side arms and fittings. It was alternately heated and cooled in an atmosphere of hydrogen and then thoroughly outgassed at 400°C under a vacuum.

The effectiveness of this activated uranium in reacting with air was tested as follows. The tube containing the uranium was isolated while air was let into the rest of the system to a pressure of 29 mm Hg. With the uranium at 200°C, the tube was opened. The pressure dropped rather rapidly to about 20 mm, and then in an hour or so fell to about 2½ mm. The uranium was held at 200 to 250°C over the weekend, but there was essentially no further change of pressure. The uranium was cooled to room temperature, and the pressure dropped to about 1 mm. The outgassing tube was placed in liquid nitrogen, and a sample of gas was taken for analysis. The composition of the gas was H_2O, 6.1%; N_2, 0.8%; O_2, trace; CO_2, trace; A, 93.1%.

The effectiveness of the activated uranium in cleaning up gases from outgassed samples was tested next. A gas mixture at 26 mm Hg pressure, obtained from the outgassing of 15 to 20 pieces of graphite which had been bombarded by a beam of argon, was exposed to the activated uranium in a similar manner. The pressure dropped rapidly at first, and then finally down to about 2 mm. The outgassing tube was placed in liquid nitrogen, and a sample of gas was taken for analysis with the following results: CH_4, 91.3%; N_2, 1.0%; O_2, 0.1%; CO_2, 0.1%; A, 7.0%; other hydrocarbons, 0.5%. The activated uranium seemed to be effective in removing everything except the methane if it was operated at about 250°C and later was cooled to be sure that all the hydrogen was absorbed. The methane was apparently picked up during the reception in the separator.

To remove the methane, the activated uranium would have to be heated much hotter, probably almost to 800°C. On the other hand, it must be cooled to room temperature to effectively take out hydrogen. Also, none of the gettering reactions except that with hydrogen are reversible, so that the uranium would soon become depleted. It seemed that the method might be improved if the methane and hydrogen were burned and the products of combustion condensed with liquid nitrogen.

[14] G. H. Dieke and H. M. Crosswhite, *J. Opt. Soc. Amer.* 42, 433 (1952).

[15] G. H. Dieke and S. P. Cunningham, *J. Opt. Soc. Amer.* 42, 187 (1952).

In an effort to get a system in which the outgassed samples could be more conveniently handled and in which the hydrogen and methane could be removed by ignition with oxygen, the system illustrated in Fig. 9 was built. This included an ignition chamber with a platinum wire connected to leads sealed through the glass, a quartz outgasser, a liquid-nitrogen trap, an activated-uranium trap and bypass line, a Toepler pump, two manometers, provision for a sample bottle above the Toepler pump, and other appropriate connecting arms. (Much of the later work was done with a stainless steel outgasser. This was connected into the glass system with a Kovar-to-glass seal hard-soldered to the stainless steel. A complete turn of copper tubing, through which water was circulated, prevented the seal and the glass from overheating.) The platinum wire in the ignition chamber could be heated by passing current through it, and oxygen could be let into the system through one of the connecting arms from a section of glass tubing between two stopcocks (not shown). A check with this system showed that with proper control of the platinum-wire temperature, hydrogen could be effectively removed by combining with oxygen. Recirculation through the liquid-nitrogen trap was necessary to remove the water vapor.

With this equipment an attempt was made to clean up some gas obtained by outgassing a few targets that had been run in the calutron and which had been receiving argon. Apparently a leak developed, since much nitrogen showed up in the analysis, and upon further check the activated uranium appeared to be spent. Nevertheless, the effective removal of methane is shown in the analysis: H_2, 1.4%; CH_4, 0.4%; H_2O, 0.1%; N_2, 92.1%; O_2, 0.4%; CO_2, 2.6%; A, 3.0%.

None of the methods thus far utilized had been very effective in removing nitrogen. Since, according to the literature, nitrogen, as well as oxygen, is removed from rare gases by calcium at a bright

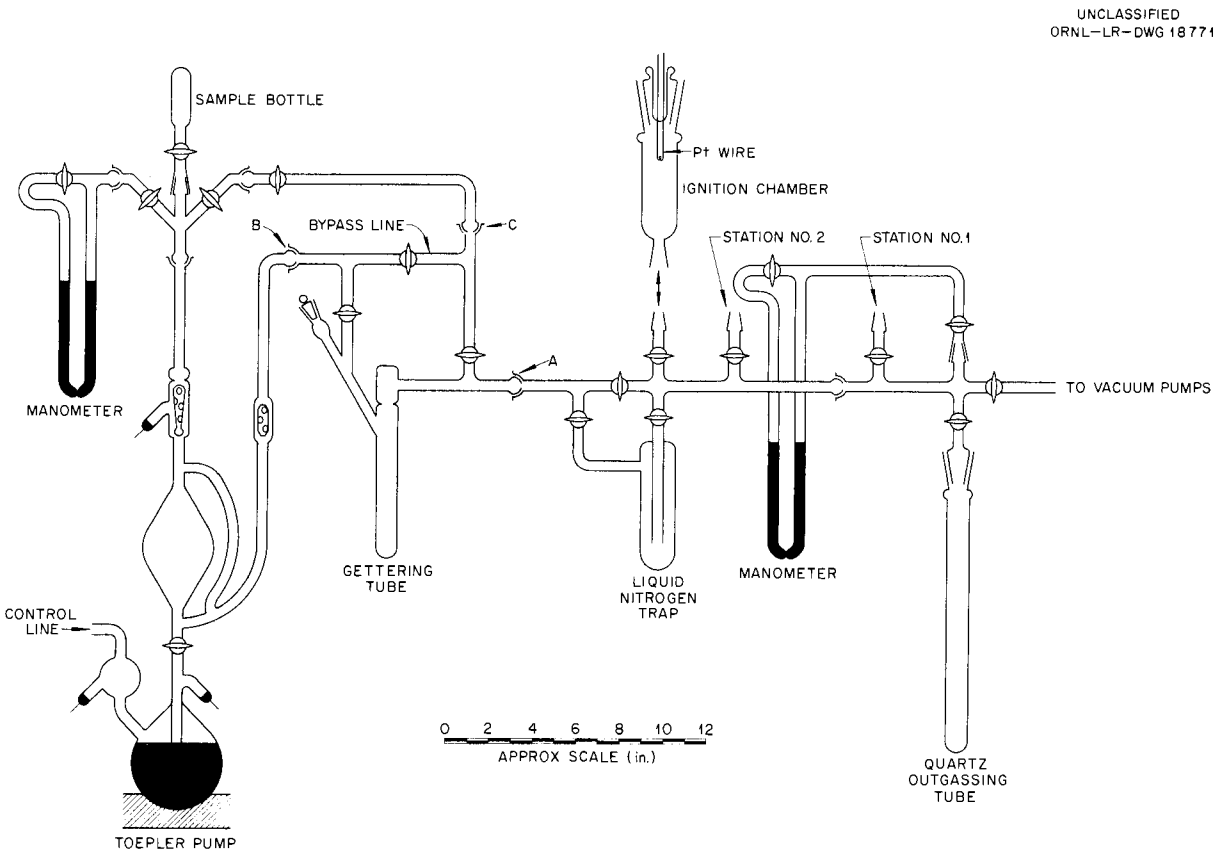

Fig. 9. Gas-handling System.

red heat,[16] the uranium was removed from the gettering tube and replaced with about ½ g of calcium metal. A sample bottle was placed at each of the following points: station No. 1 (see Fig. 9), station No. 2, and above the Toepler pump. Some bombarded targets were outgassed, and a sample of the gas was collected in the bottle at station No. 1. The calcium in the trap was heated to approximately 725°C, and, after some diffusion of the gases had taken place, a sample was taken in the bottle at station No. 2. By means of the Toepler pump, the gases were circulated through the hot calcium until the pressure would not drop any more, and a sample was taken in the bottle above the Toepler pump (No. 3). Table 4 shows a comparison of the three samples. Further similar runs showed that calcium at this temperature was only partially effective in removing nitrogen and oxygen, and also was not very effective in removing hydrogen and methane.

A cleanup of gases from exposed targets was now attempted by using hot calcium, the platinum wire and oxygen, and the liquid-nitrogen trap. After the targets had been outgassed, the gas was exposed to an excess of oxygen in the presence of the glowing platinum wire and was circulated through the hot calcium and the liquid-nitrogen trap. An analysis of the gas was as follows: H_2, 11.8%; H_2O, 18.2%; N_2, 3.1%; O_2, 19.4%; CO_2, 4.2%; A, 39.1%; and hydrocarbons, 4.2%.

According to Newton,[17] practically everything except hydrogen and the rare gases can be removed from a mixture of gases with hot uranium chips. To check the adaptability of this to the existing cleanup system, the gettering tube was replaced by a U-shaped quartz tube to which was attached a tube for the activated uranium. Figure 10 shows this equipment, with uranium chips and activated uranium in place, which was connected into the gas-handling equipment, Fig. 9, at ball and socket fittings *A*, *B*, and *C*. The platinum wire system was eliminated, and the liquid-nitrogen trap was left isolated. The activated uranium was preoutgassed at 400°C, some copper targets were placed in the outgasser, and the complete system was evacuated. The targets were heated in the isolated outgasser and then allowed to cool. The gas was allowed to enter the system containing the uranium chips, which were heated to about 800°C by means of a muffle furnace. Within about 15 to 20 min, the pressure had fallen from about 10 mm to 5 mm. The activated-uranium trap was now opened, and the gas was circulated with the Toepler pump. In less than 15 min, the pressure was less than 1 mm. An analysis of the gas was as follows: H_2, 4.2%;

[16] M. Leatherman and E. P. Bartlett, *Ind. Eng. Chem., Anal. Ed.* 1, 223 (1929).

[17] A. S. Newton, *The Purification of Some Laboratory Gases*, MDDC-724 (declassified Jan. 1, 1947).

Table 4. Effect of Cleanup by Calcium on Composition of Gas Mixture Recovered from Target

Component	Per Cent		
	Station No. 1, No Cleaning	Station No. 2, Cleaning by Diffusion Only	No. 3, Cleaned by Circulation
H_2	44.6	14.4	3.6
CH_4	0.6	0.9	0.0
H_2O	2.3	75.6	0.9
N_2	41.7	1.8	60.1
O_2	10.1	0.0	15.8
A	0.5	2.6	19.4
CO_2	0.3	0.8	0.1
Miscellaneous hydrocarbons	Trace	3.8	0.0

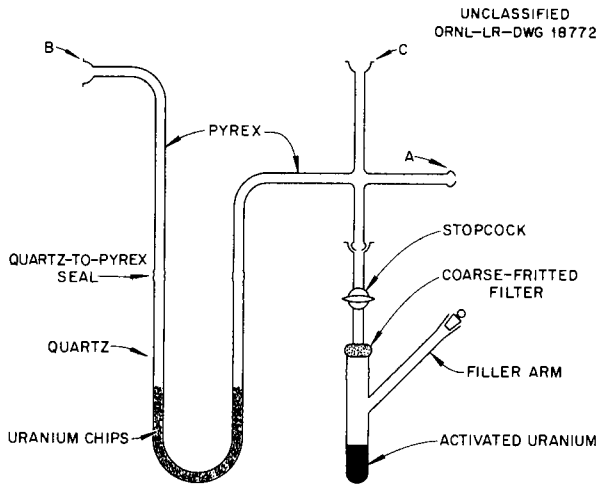

Fig. 10. Uranium–Activated-Uranium Gettering System.

CH_4, 0.2%; H_2O, 3.9%; N_2, 0.1%; O_2, trace; A, 91.5%; CO_2, 0.1%.

It was learned through further experience that it was necessary to keep the uranium chips at 800°C or higher and to circulate the gas through them for approximately half an hour. Then it was desirable to allow the uranium chips to cool and to allow the gas to be exposed to the activated uranium for an hour or so to ensure entrapping the hydrogen, some of which was apparently coming from the reactions with the hot uranium chips. By following these procedures, the smaller yields (those yielding 5 to 10 ml after cleaning up) could be obtained with purities of 99.5% or better. Larger amounts treated in a like manner (those yielding up to 30 ml of cleaned argon) were cleaned to approximately 90% purity. The total amount of gas before cleaning up was often about 100 times as great as the final yield of inert gas. These larger amounts could be cleaned up to the higher purity by pumping the gas into a reservoir and isolating it while the activated-uranium trap was outgassed, and then recirculating the gas through the system for a sufficient length of time, usually several hours. The last trace of impurity was usually nitrogen.

In the following list, sample No. 1 is a typical sample cleaned by hot uranium chips plus activated uranium. Sample No. 2 shows one of the best chemical purities obtained.

Component	Sample No. 1 (%)	Sample No. 2 (%)
H_2	0.0	0.1
N_2	0.5	0.1
O_2	0.0	0.02
A	99.5	99.8
CO_2	<0.1	0.0

CONCLUSION

It is concluded that milligram quantities of any desired isotope of argon and neon can be relatively efficiently collected by the methods described above, or by modifications thereof.

On the other hand, since a relatively small per cent of the gas which is let into the source is converted to ions which actually end up at the receiver, the great scarcity of krypton and xenon would indicate the desirability of scrubbers on the exhaust of the separator vacuum system which were capable of purifying the rare gas and recycling or saving it. The collection of these gases electromagnetically might be less practical.

In the case of helium, an optimistic figure of 60 ma for the reception rate of the abundant isotope would yield, at 100% retention, approximately 50 ml/hr, but it would be necessary to collect at this rate for approximately 2000 years to accumulate 1 ml of the much less abundant He^3.

ACKNOWLEDGMENT

Some of the early parts of this project were carried out with the assistance of F. R. Duncan. The author wishes, also, to acknowledge the many helpful suggestions of C. E. Normand and P. S. Baker, and to thank J. R. Walton and C. E. Melton, who made the many necessary mass analyses. The separator operations were carried out by the operating crew under the direction of L. O. Love. Technical assistance was also received from W. A. Bell, W. K. Prater, G. M. Banic, and W. R. Rathkamp.