UNCLASSIFIED

CENTRAL RESEARCH LIBRARY
DOCUMENT COLLECTION

MARTIN MARIETTA ENERGY SYSTEMS LIBRARIES
3 4456 0361125 0

ORNL-2298
Physics
TID 4500 (13th ed.)

cy. 4

RESPONSE OF THE ANTHRACENE SCINTILLATION COUNTER TO LOW ENERGY ELECTRONS

Lloyd W. Johnston
R. D. Birkhoff
J. S. Cheka
H. H. Hubbell
B. G. Saunders

CENTRAL RESEARCH LIBRARY
DOCUMENT COLLECTION

LIBRARY LOAN COPY

DO NOT TRANSFER TO ANOTHER PERSON

If you wish someone else to see this document, send in name with document and the library will arrange a loan.

OAK RIDGE NATIONAL LABORATORY
OPERATED BY
UNION CARBIDE NUCLEAR COMPANY
A Division of Union Carbide and Carbon Corporation
UCC
POST OFFICE BOX X · OAK RIDGE, TENNESSEE

UNCLASSIFIED

Printed in USA. Price 35 cents. Available from the

Office of Technical Services
U. S. Department of Commerce
Washington 25, D. C.

LEGAL NOTICE

This report was prepared as an account of Government sponsored work. Neither the United States, nor the Commission, nor any person acting on behalf of the Commission:

A. Makes any warranty or representation, express or implied, with respect to the accuracy, completeness, or usefulness of the information contained in this report, or that the use of any information, apparatus, method, or process disclosed in this report may not infringe privately owned rights; or

B. Assumes any liabilities with respect to the use of, or for damages resulting from the use of any information, apparatus, method, or process disclosed in this report.

As used in the above, "person acting on behalf of the Commission" includes any employee or contractor of the Commission to the extent that such employee or contractor prepares, handles or distributes, or provides access to, any information pursuant to his employment or contract with the Commission.

Unclassified

ORNL-2298

Contract No. W-7405-eng-26

HEALTH PHYSICS DIVISION

RESPONSE OF THE ANTHRACENE SCINTILLATION COUNTER TO LOW ENERGY ELECTRONS

Lloyd W. Johnston
R. D. Birkhoff
J. S. Cheka
H. H. Hubbell
B. G. Saunders

Date Issued
APR 16 1957

Oak Ridge National Laboratory
Operated by
Union Carbide Nuclear Company
A Division of Union Carbide and Carbon Corporation
Post Office Box X
Oak Ridge, Tennessee

Unclassified

MARTIN MARIETTA ENERGY SYSTEMS LIBRARIES
3 4456 0361125 0

INTERNAL DISTRIBUTION

1. C. E. Center
2. Biology Library
3. Health Physics Library
4-6. Central Research Library
7. Reactor Experimental Engineering Library
8-24. Laboratory Records Department
25. Laboratory Records, ORNL R.C.
26. L. B. Emlet (K-25)
27. J. P. Murray (Y-12)
28. A. M. Weinberg
29. J. A. Swartout
30. E. D. Shipley
31. E. J. Murphy
32. M. L. Nelson
33. K. Z. Morgan
34. S. C. Lind
35. A. S. Householder
36. C. S. Harrill
37. C. E. Winters
38. A. H. Snell
39. E. H. Taylor
40. W. H. Jordan
41. T. A. Lincoln
42. A. Hollaender
43. F. L. Culler
44. D. W. Cardwell
45. E. M. King
46. M. T. Kelley
47. E. E. Anderson
48. R. S. Livingston
49. C. P. Keim
50. K. E. Cowser
51. C. D. Susano
52. L. B. Farabee
53. F. J. Davis
54. R. J. Morton
55. C. E. Haynes
56. Hugh F. Henry (K-25)
57. E. G. Struxness
58. W. E. Cohn
59-73. H. H. Hubbell
74. D. E. Arthur
75. J. Neufeld
76. D. D. Cowen
77. P. M. Reyling
78. P. R. Bell
79. M. J. Skinner
80. J. C. Hart
81. T. H. J. Burnett
82. W. J. Lacy
83. B. G. Saunders
84. G. S. Hurst
85. T. E. Bortner
86. J. A. Lane
87. R. W. Johnson
88. H. P. Yockey
89. C. E. Clifford
90. J. L. Gabbard
91. R. A. Charpie
92. G. E. Boyd
93. S. J. Cromer
94. L. C. Emerson (Y-12)
95. D. M. Davis
96. P. E. Brown
97. E. D. Gupton
98. J. C. Ledbetter
99. R. L. Clark
100. G. C. Cain
101. L. C. Johnson
102. W. Ogg
103. O. D. Teague
104. E. L. Sharp
105. E. J. Kuna
106. H. H. Abee
107. C. R. Guinn
108. A. D. Warden
109. S. R. Bernard
110. C. C. Sartain
111. J. R. Muir
112. J. A. Auxier
113. M. F. Fair
114. S. I. Auerbach
115. G. W. Royster, Jr.
116. R. R. Dickison
117. ORNL - Y-12 Technical Library, Document Reference Section
118. R. E. Yoder
119. F. W. Sanders
120. F. C. Maienschein
121. W. J. Boegly, Jr.
122. F. L. Parker

123. W. E. Lotz
124. B. Fish
125. M. B. Edwards
126. F. M. Empson
127. G. G. Robeck
128-142. R. D. Birkhoff
143. R. C. Davis
144. R. H. Ritchie
145. J. A. Harter
146. W. G. Stone
147. J. S. Cheka
148. P. N. Hensley
149. R. W. Peelle
150. B. H. Ketelle

EXTERNAL DISTRIBUTION

151. C. P. Straub, Public Health Service, Robert A. Taft Sanitary Engineering Center
152. R. M. Collier, University of Florida
153. Physics and Engineering Group, Balcones Research Center, RFD 4, Box 189, Austin, Texas
154. R. F. Bacher, California Institute of Technology
155. G. E. Thoma, USAF
156. H. J. McAlduff, AEC, Oak Ridge
157. Vanderbilt University, Physics Library
158. Massachusetts Institute of Technology, Department of Electrical Engineering
159. University of California, Gerhard Klein
160. R. M. Richardson, U.S. Geological Survey, 2-C P.O. Building, Knoxville, Tennessee
161. C. V. Theis, U.S. Geological Survey, Box 433, Albuquerque, New Mexico
162. Lola Lyons, Librarian, Olin Industries, Inc., East Alton, Illinois
163. Jack Story, University of Chicago, Argonne Cancer Research Hospital, 950 East 59th Street, Chicago 37, Illinois
164. J. H. Ebersole, USSS Nautilus, c/o Fleet Post Office, New York, New York
165. David Smith, Electric Boat Division, Groton, Connecticut
166. Division of Research and Development, AEC, ORO
167. S. C. Sigoloff, USAF, The Radiobiological Laboratory, University of Texas and U.S. Air Force, Austin, Texas
168. Robert Wood, Department of Physics, Memorial Center, 444 East 68th Street, New York 21, New York
169. J. J. Hopkins, Vanderbilt University
170. D. J. Zaffarano, Iowa State College
171-180. Lloyd W. Johnston, Belleview Apartments, 1007 Wakefield Drive A-2, Alexandria, Virginia
181-755. Given distribution as shown in TID 4500 (13th ed.) under Physics category (100 copies - OTS)

TABLE OF CONTENTS

		Page
I	Introduction	1
II	The Pulse Height Distribution	4
III	The Scintillation Response	9
IV	Apparatus	15
V	Experiments and Results	21
VI	Discussion	33
	Appendix I	34
	Appendix II	36
	Appendix III	38
	Bibliography	40

LIST OF TABLES

		Page
I	Summary of Existing Data	3
II	Line Width Data for the .060 Inch Crystal	30
III	Line Width Data for the .011 Inch Crystal	30

LIST OF FIGURES

		Page
1.	Schematic Diagram of the Apparatus	16
2.	Schematic of the Scintillation Detector	18
3.	Crystal Holding Jig	18
4.	Calibration of the Linear Amplifier and Pulse Height Selector	20
5.	Sample Pulse Height Distributions Taken with the .060 Inch Crystal	22
6.	Sample Pulse Height Distributions Taken with the .011 Inch Crystal	23
7.	Pulse Height as a Function of Electron Energy (.060 Inch Crystal)	25
8.	Pulse Height as a Function of Electron Energy (.011 Inch Crystal)	26
9.	Gaussian Representation of Data	28
10.	Comparison of Experimental Data with a Gaussian Distribution	29
11.	Electron Energy as a Function of a^2 for the .060 Inch Crystal	31
12.	Electron Energy as a Function of a^2 for the .011 Inch Crystal	32

I. INTRODUCTION

One of the most recent additions to the available techniques for detecting ionization radiation has been the scintillation counter. In its simplest form it consists of five parts - the scintillation crystal, the photomultiplier, the linear amplifier, the pulse height analyzer, and either a scaler or a count rate meter. The ionizing radiation enters the crystal and causes atomic or molecular excitation, and the excitation energy may be given off in the form of light as the atoms or molecules return to the ground state. The light leaves the crystal and falls upon the photocathode of the photomultiplier, where a number of photoelectrons, proportional to the light intensity, are emitted from the photocathode and are accelerated to the first dynode. At each dynode the number of electrons is increased, until a voltage pulse is created at the anode with an amplitude proportional to the light intensity emitted from the crystal. This pulse is amplified, fed to the pulse height analyzer, and recorded.

The anthracene scintillation counter as a detector of electrons and electromagnetic radiations has become increasingly important to experimental physicists. This importance stems from such properties as the relatively large pulse output, the difference in counting efficiency from beta-ray and gamma-ray sources, the very fast time constant, the good resolutions attainable, and the relative insensitivity of pulse height to temperature changes. Such properties suggest the

application of anthracene counters to beta-ray spectrometry and dosimetry.

In contrast to other types of scintillation counters, such as the sodium iodide counter, comparatively little information is available regarding the response to monoenergetic electrons. Breitenberger[1] has called attention to the need for more information on resolution with various reflector and crystal geometries. Table I gives a summary of the data available on the response of anthracene to monoenergetic electrons. Apparently there is a need for additional information on monoenergetic electrons incident on very thin, bare anthracene crystals. The purpose of this report is to provide information regarding the pulse height response of an anthracene scintillation counter to monoenergetic electrons and the distribution of the pulse height spectra.

---

[1] Breitenberger, PROGRESS IN NUCLEAR PHYSICS, Vol. 4, (Frisch, ed.), Pergammon Press, London, 1955, chap. 2, p. 78.

Table I Summary of Existing Data

Observer	Source of Radiation	Photomultiplier	Type of Pulse Analyzer	Foil Cover
Hopkins[2]	β-ray spectrometer	RCA 5819	integral	yes
Taylor et al.[3]	pulsed electron gun	RCA 5819	integral	not stated
Robinson and Jentschke[4]	k-capture x rays	RCA 5819	differential	yes
Fowler and Roos[5]	x-ray tube	RCA 5819	differential	not stated
Birks and Brooks[6]	x-ray tube	EMI 5060	differential	not stated

	Crystal Thickness	Energy Range Studied	Linearity of Response with Energy	Resolution Studies
Hopkins	1.29 cm	30-1900 kev	linear above 125 kev	yes
	2.50 cm	800-3200 kev	linear above 125 kev	yes
Taylor et al.	.25 cm	.5-624 kev	linear above 100 kev	no
Robinson and Jentschke	1.00 cm	9-24 kev	linear within error	no
Fowler and Roos	.2 cm	10-40 kev	linear within error	no
Birks and Brooks	.2 cm	6-30 kev	linear within error	no

[2] Hopkins, J. I., Rev. Sci. Instr. 22, 29, 1951.

[3] Taylor, C. J., Jentschke, W. K., Remley, M. E., Eby, F. S., and Kruger, G., Phys. Rev. 84, 1034, 1951.

[4] Robinson, W. H., and Jentschke, W., Phys. Rev. 95, 1412, 1954.

[5] Fowler, J. M., and Roos, C. E., Phys. Rev. 98, 996, 1955.

[6] Birks, J. B., and Brooks, F. D., Proc. Phys. Soc. (London) 69B, 721, 1956.

II. THE PULSE HEIGHT DISTRIBUTION

A characteristic of the scintillation counter which limits its usefulness somewhat as an electron spectrometer is the fluctuation in pulse height which is observed when the crystal is bombarded repeatedly with monoenergetic electrons. Some of the electrons may be scattered from the crystal after leaving only a fraction of their energy to be converted to light within the crystal. There is also a possibility that the light quanta may leave the crystal in a direction such that they are not incident upon the photocathode. Loss of light from this cause may be reduced by using reflectors around the crystal and photomultiplier to redirect as much of the light as possible onto the photocathode. The light is attenuated as it passes through the crystal to the photocathode. Since the attenuation is a function of the distance the light travels through the crystal, this attenuation may be minimized by making the crystals no thicker than the range of the electrons. The number of electrons leaving the photocathode varies somewhat for a given light intensity, and there is some variation in multiplication at the subsequent dynodes. Also some of the photoelectrons may escape being multiplied, which results in a variation in the voltage pulse at the anode. All of these processes add together to produce a distribution of pulse heights. Breitenberger[7] has given a detailed analysis of these fluctuations in which he shows that the resulting pulse height

---

[7] Breitenberger, E., op. cit. pp. 56-94.

distribution is by no means simple. For most purposes, however, the pulse height distribution may be considered to be a gaussian with a width proportional to the square root of the energy of the incident electrons.

An expression for the gaussian pulse height distribution can be derived on the basis that the distribution is determined by the statistical variation in the number of photoelectrons produced at the photocathode of the photomultiplier. The pulse is proportional to the number of photoelectrons emitted from the photocathode. This can be stated as

$$h = gn, \quad \text{and } H = gr, \tag{1}$$

where H is the pulse height at which the pulse height distribution is a maximum, h is any other pulse height, r is the average number of photoelectrons emitted from the photocathode, n is any other number of photoelectrons associated with a pulse height h, and g is the gain of the photomultiplier and amplifier. It was found experimentally that a linear relation exists between the maximum of the pulse height distribution and the incident electron energy. This can be written,

$$E - i = \alpha H. \tag{2}$$

where E is the electron energy, i is the intercept on the energy axis,

and α is a constant. If E is expressed in kev, and H is expressed in pulse height units, (phu), α takes the units kev/phu. From (1) and (2) we see that

$$E - i = Kr \ , \tag{3}$$

where K is another constant having units of kev/photoelectron. The constant K can be interpreted as the average amount of energy absorbed in the crystal required to produce a photoelectron at the photocathode. Finally, if the distribution of the number of photoelectrons per electron incident on the crystal is a gaussian, the expression for the distribution may be written as

$$P(n) = \frac{1}{\sqrt{2\pi r}} \exp\left[-\frac{(r - n)^2}{2r}\right], \tag{4}$$

where P(n) is the probability of n photoelectrons being emitted, and r is the average number of photoelectrons emitted. We can rewrite (4) as,

$$P(n) = \frac{1}{\sqrt{2\pi r}} \exp\left[-\frac{r(1 - n/r)^2}{2}\right], \tag{5}$$

and from (1),

$$\frac{n}{r} = \frac{h}{H} \ . \tag{6}$$

Also,

$$P(n)dn = G(h)dh \ ,$$

where G(h) is the counting rate of pulses of height H. Then

$$P(n) \frac{dn}{dh} = G(h) \ . \tag{7}$$

Substituting in (5) from (1), (3), (6), and (7) we have

$$G(h) = \frac{(dn)/(dh)}{\sqrt{2\pi \ H/g}} \exp \left[- \frac{(E - i)(1 - h/H)^2}{2K} \right] .$$

$$G(h) = \frac{(dn)/(dh)}{\sqrt{2\pi \ H/g}} \exp \left[- \frac{(E - i)(H - h)^2}{2KH^2} \right] . \tag{8}$$

Substituting from (2),

$$G(h) = \frac{(dn)/(dh)}{\sqrt{2\pi \ H/g}} \exp \left[- \frac{\alpha^2 \ (H - h)^2}{2K \ (E - i)} \right] . \tag{9}$$

For convenience two other terms may be defined,

$$C = \frac{(dn)/(dh)}{\sqrt{2\pi\ H/g}}\ , \tag{10}$$

and

$$a^2 = 2K\ (E - i)\ . \tag{11}$$

These terms will be constants for any specific electron energy. To simplify the equation further, let (H - h) be designated as ΔH. Making these substitutions, (9) becomes

$$G(h) = C \exp\left[-\frac{\alpha^2\ (\Delta H)^2}{a^2}\right]. \tag{12}$$

Now, for a particular distribution, when h = H, G(h) = C. That is, C is the counting rate at the maximum of the pulse height distribution. Also, if we choose a particular h, say h_e such that $G(h_e) = C/e$, we see that $\left[\alpha^2\ (\Delta H)_e^2\right] \Big/ a^2 = 1$. This means that at 1/e times the maximum counting rate a/α represents the half width of the distribution; therefore, a^2 is proportional to the square of the half width. According to (11), then, a linear relation exists between the square of the half width and the electron energy.

III. THE SCINTILLATION RESPONSE

A theory for the scintillation response of the scintillation counter which closely follows Bowen's "exciton" theory for ultra violet radiation, has been proposed by Birks.[8] The electronic energy which is induced by the incident radiation moves about from molecule to molecule until it is captured by one of them. The molecule that captures the "exciton" then either quenches it or fluoresces. That is, the passage of corpuscular radiation through the crystal causes damage to the molecules of the crystal, which then act as quenchers for any "excitons" that may have been produced. The pulse from the photomultiplier is proportional to the number of light quanta produced within the crystal and is denoted by S. The energy of the particles is denoted by E. Two other terms $\frac{dS}{dx}$ (volts/cm), called the specific fluorescence, and $\frac{dE}{dx}$ (Mev/cm), called the specific energy loss, are defined where x is the residual range of the particle in the crystal. $\frac{dS}{dx}$ is proportional to the light quanta produced per unit path length and can be used as a measure of the photons per cm path length. Now, the number of "excitons" produced per unit path length is proportional to the specific energy loss. Denote this by $A \frac{dE}{dx}$, where A is the constant of proportionality. The local concentration of damaged molecules at a particular point within the crystal is also proportional to the specific energy loss. Denote the number of damaged molecules per undamaged molecule by $B \frac{dE}{dx}$, where B is constant of proportionality. Now let k be the capture probability

---

[8] Birks, J. B., Proc. Phys. Soc. (London) 64A, 874, 1951.

of a damaged molecule, or quencher, relative to the capture probability of an undamaged molecule, or photon producer. Then,

$$\frac{dS}{dx} = \frac{A(dE)/(dx)}{1 + kB(dE)/(dx)} . \tag{13}$$

According to Glocker,[9] Libby,[10] and Lane and Zaffarano[11] the range of electrons with energies from 1 kev to 300 kev is proportional to the 5/3 power of the electron energy. This may be written

$$x = b\ E^{5/3} , \tag{14}$$

where x is the residual range and b is a constant. Now,

$$\frac{dx}{dE} = 5/3\ b\ E^{2/3} , \tag{15}$$

but

$$\frac{dS}{dx} = \frac{dS}{dE} \cdot \frac{dE}{dx} , \tag{16}$$

and from substitution of (15) and (13) into (16),

---

[9] Glocker, R., Zeits. f. Naturforsh. 3A, 147, 1948.

[10] Libby, W. E., Anal. Chem. 19, 2 (1947).

[11] Lane, R. O., and Zaffarano, D. J., ISC-439. Available from Technical Information Service, Oak Ridge, Tennessee.

$$\frac{dS}{dE} = \frac{A}{1 + \frac{3kB}{5b} E^{-2/3}} .$$

Hence,

$$S = \int_0^E \frac{AdE}{1 + \frac{3kB}{5b} E^{-2/3}} . \tag{17}$$

To integrate Equation (17), let $y = 1 + \frac{3kB}{5b} E^{-2/3}$. Then,

$$E^{-2/3} = \frac{5b}{3kB} (y - 1) .$$

$$E = \frac{1}{\left[\frac{5b}{3kB} (y - 1)\right]^{3/2}} .$$

$$dE = \frac{- 3/2 \, dy}{\left(\frac{5b}{3kB}\right)^{3/2} (y - 1)^{5/2}} . \tag{18}$$

Then (17) becomes,

$$S = \frac{3}{2} A \left(\frac{3kB}{5b}\right)^{3/2} \int_{1 + \frac{3kB}{5b} E^{-2/3}}^{\infty} \frac{dy}{y(y - 1)^{5/2}} \tag{19}$$

Now, let $y - 1 = Z^2$. Then

$$dy = 2ZdZ,$$

and (19) becomes,

$$S = 3A\left(\frac{3kB}{5b}\right)^{3/2} \int_{Z_o = \left(\frac{3kB}{5b}\right)^{1/2} E^{-1/3}}^{\infty} \frac{dZ}{(Z^2 + 1)\, Z^4} . \tag{20}$$

This function is listed in tables of integrals,[12] and yields

$$S = 3A\left(\frac{3kB}{5b}\right)^{3/2} \left[\frac{\pi}{2} - \left(-\frac{1}{3Z_o^3} + \frac{1}{Z_o} + \tan^{-1} Z_o\right)\right] .$$

On substitution of the lower limit,

$$S = 3A\left(\frac{3kB}{5b}\right)^{3/2} \left[\frac{\pi}{2} + \frac{E}{3\left(\frac{3kB}{5b}\right)^{3/2}} - \frac{E^{1/3}}{\left(\frac{3kB}{5b}\right)^{1/2}} - \tan^{-1}\left(\frac{3kB}{5b}\right)^{1/2} E^{-1/3}\right] . \tag{21}$$

Equation (21) gives the relation between the pulse height response of an anthracene scintillation counter and the electron energy. For high energies the first, third, and fourth terms of Equation (21) become negligible in comparison with the second term. Then,

---

[12] Dwight, H. B., TABLES OF INTEGRALS AND OTHER MATHEMATICAL DATA, MacMillan Co., New York, New York, 1934, p. 25.

$$S = 3A\left(\frac{3kB}{5b}\right)^{3/2}\left[\frac{E}{3\left(\frac{3kB}{5b}\right)^{3/2}}\right] .$$

$$S = AE . \tag{22}$$

Thus for sufficiently high electron energies (21) predicts that the pulse height response will be linear with energy. For low electron energies the arc tangent term becomes important. The expansion of this term yields

$$\tan^{-1}\left(\frac{3kB}{5b}\right)^{1/2} E^{-1/3} = \frac{\pi}{2} - \frac{E^{1/3}}{\left(\frac{3kB}{5b}\right)^{1/2}} + \frac{E}{3\left(\frac{3kB}{5b}\right)^{3/2}} - \frac{E^{5/3}}{5\left(\frac{3kB}{5b}\right)^{5/2}} \tag{23}$$

$$+ \frac{E^{7/3}}{7\left(\frac{3kB}{5b}\right)^{7/2}} - \frac{E^{3}}{9\left(\frac{3kB}{5b}\right)^{9/2}} + \cdots . \tag{23}$$

Substituting (23) into Equation (21) and neglecting any terms beyond the E^3 term in the expansion,

$$S = 3A\left(\frac{3kB}{5b}\right)^{3/2}\left[\frac{E^{5/3}}{5\left(\frac{3kB}{5b}\right)^{5/2}} - \frac{E^{7/3}}{7\left(\frac{3kB}{5b}\right)^{7/2}} + \frac{E^{3}}{9\left(\frac{3kB}{5b}\right)^{9/2}}\right]$$

or

$$S = \frac{Ab}{kB} E^{5/3} - \frac{25}{21} \frac{Ab^2}{k^2B^2} E^{7/3} + \frac{125}{81} \frac{Ab^3}{k^3B^3} E^3 \tag{24}$$

Hence, at low energies the pulse height response is not a linear function of the energy, but it is roughly proportional to the 5/3 power of the energy. The relation given in (22) can be deduced from (13) without assuming a range-energy relation as in (14) by noting that, for high energies, $\frac{dE}{dx}$ is small. The first term of (24) can be deduced from (13) by noting that, for low energies, $\frac{dE}{dx}$ is large and utilizing the range-energy relation.

Another theory has been proposed by Wright,[13] but according to Swank[14] the shape of the pulse height versus energy curve found from Wright's theory is sufficiently similar to that predicted by Birks[8] that the accuracy of the present experimental data is not adequate to decide between them.

---

[13] Wright, G. T., Phys. Rev. 91, 1282, 1953.

[14] Swank, R. W., Nucleonics 13, 14, 1954.

IV. APPARATUS

The apparatus is shown schematically in Fig. 1. It consists of an electron gun, an accelerating tube, a drift tube, and a scintillation counter.

The electron gun was a conventional 3MP1 type consisting of an indirectly heated oxide coated cathode, an einzel lens, and a set of vertical and horizontal electrostatic deflecting plates. Such a gun makes it possible to vary the beam current and the direction of the beam. The gun is mounted in a brass tube which is bolted to the end plate of the accelerator. Three O rings are located inside the brass tube between the tube and the glass envelope of the electron gun to maintain the vacuum seal. In conjunction with the plates of the electron gun, large vertical and horizontal coils, designed to neutralize the earth's magnetic field, aided in directing the electron beam.

The accelerator, which is similar to the Cockroft Walton type, consists of alternate ceramic insulators and accelerating electrodes sealed vacuum tight with vinyl cement. A voltage divider consisting of six fifty megohm International Resistance Company resistors placed in series across the accelerator establishes the potential of each electrode. The high voltage is supplied by a Westinghouse 250 KV x-ray power supply. A collimator, .375 inch in diameter, located at the end of the accelerator helps to reduce any background from the accelerator. The drift tube, which may be used to provide additional acceleration, is grounded throughout its length. Use of this drift tube permits

UNCLASSIFIED
ORNL-LR-DWG. 18223

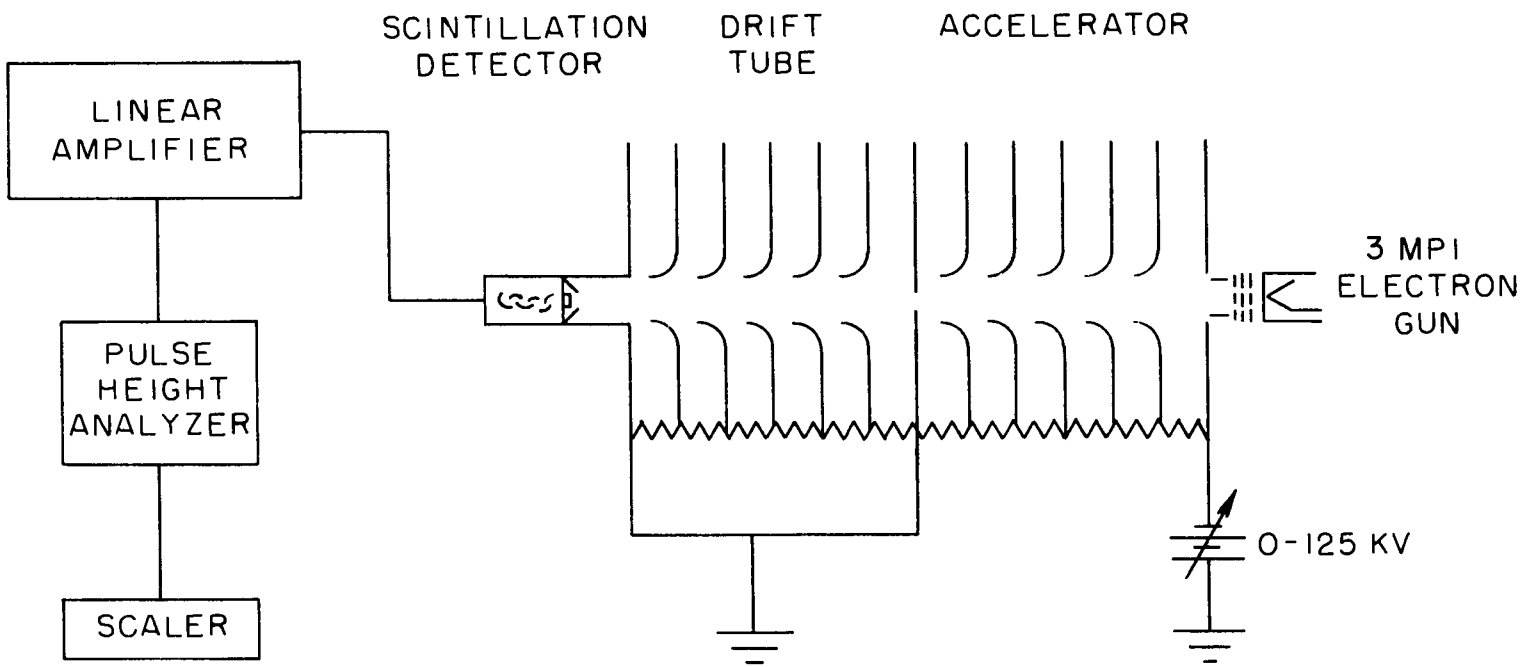

Fig. 1. Schematic Diagram of the Apparatus.

removal of the electron beam from the high voltage region and thus results in further reduction of background from the accelerator.

Figure 2 is a schematic diagram of the scintillation detector. The crystals, purchased from Harshaw Chemical Company, were reduced in size to a diameter of .375 inch by machining in a lathe. The device shown in Fig. 3 makes it possible to shave small amounts from the surface of the machined crystals until they are of the desired thickness. The crystals were fixed to the photomultiplier with a silicone vacuum grease. The light reflector consists of a conical cavity bored in a cylindrical piece of aluminum with the apex of the cone removed, leaving a .375 inch hole open to the electron beam. The base of the cone fits over the end of the photomultiplier. The surface of the cavity has a lining of aluminum foil. The photomultiplier used was an RCA 6199, which is a 10 stage, head on type with a 1.25 inch, cesium antimony, semitransparent cathode. The relatively small cathode diameter is desirable, since it results in a lower dark current and presents less area to any extraneous radiation. The wavelength for maximum response of the tube is given as 4400 $\pm$ 500 angstroms which matches well the spectral emission from anthracene. The voltage supply for the photomultiplier was an Atomic Instruments Company super-stable high voltage supply, Model 312. A mu metal shield surrounded the tube to reduce effects due to magnetic fields. An Atomic Instruments Company linear amplifier, Model 218, and single channel pulse height analyzer, Model 510, were employed. For

UNCLASSIFIED
ORNL-LR-DWG. 18224

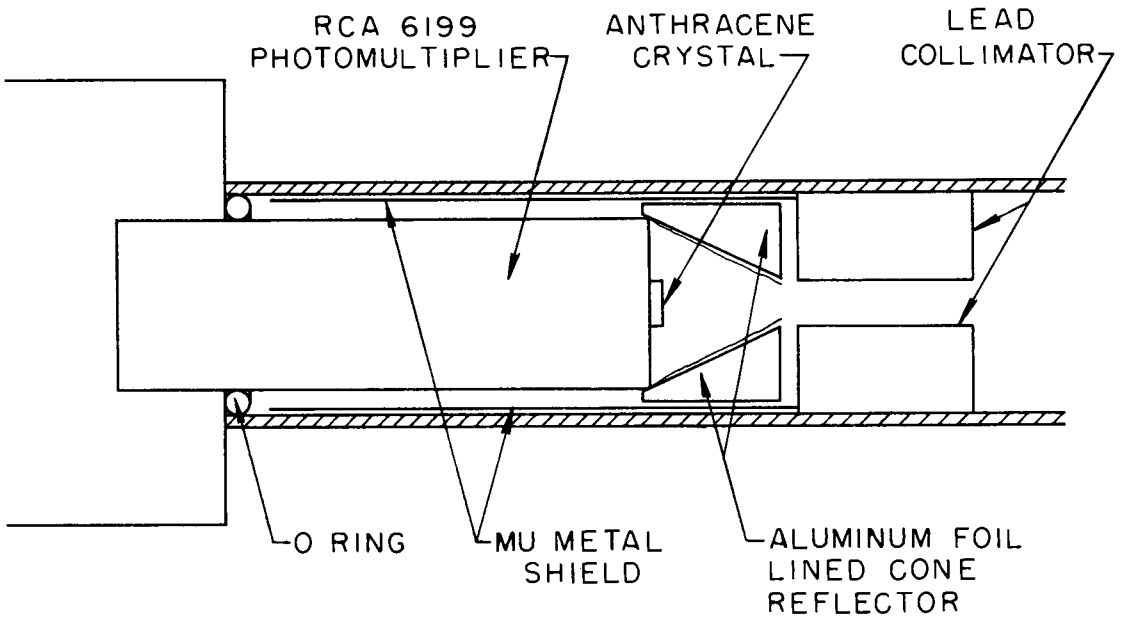

Fig. 2. Schematic of the Scintillation Detector.

UNCLASSIFIED
ORNL-LR-DWG. 20120

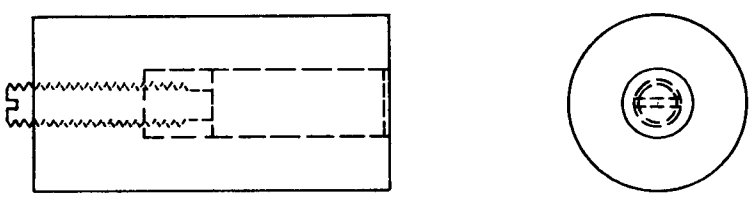

Fig. 3. Crystal Holding Jig.

calibration purposes the amplifier and pulse height selector were driven by an R.C.L. precision pulse generator, mark 15, Model 47B. The pulse height reading may be plotted against the pulser voltage for a constant amplifier gain as shown in Fig. 4. The pulse height readings shown are base-line readings with a 2 volt window. In a similar fashion the linear amplifier gain was also found to be linear for a given pulse size, so that the linearity of the system extends beyond the range shown in Fig. 4.

The vacuum system equipment consists of a Distillation Products Industries diffusion pump, Model VMF 260-K, a W. M. Welch Manufacturing Company duo seal vacuum forepump, and a liquid nitrogen vapor trap. Vacuums of $(6 \pm 2) \times 10^{-5}$ mm of mercury were maintained during the experiments. A series of valves makes it possible to separate the diffusion pump from the system, so that air could be let into the system without cooling the pump. Normally air was admitted to the crystal when it was not in use to reduce sublimation. This may have been unnecessary, inasmuch as no change in crystal appearance or performance was ever noted.

UNCLASSIFIED
ORNL-LR-DWG. 20121

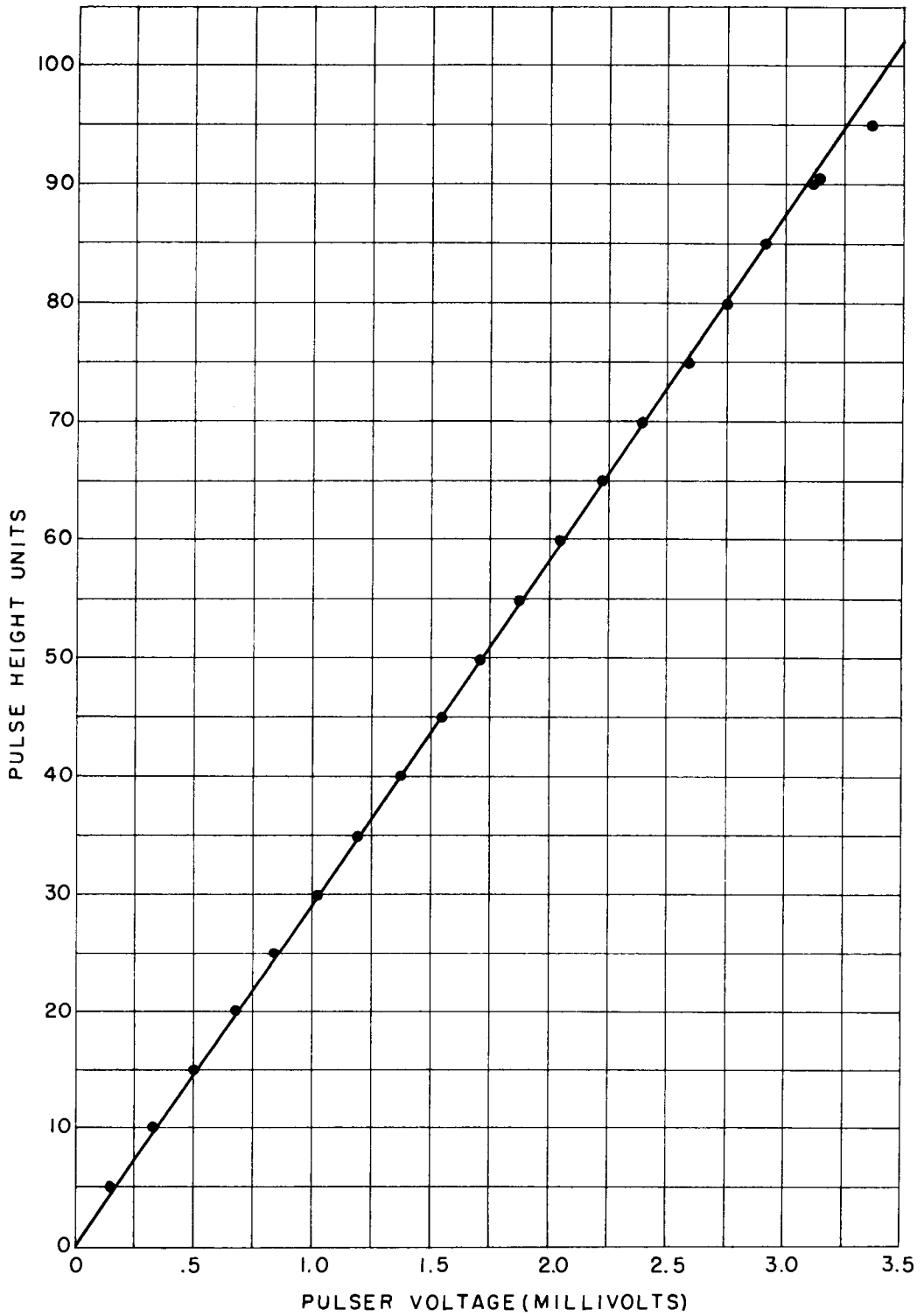

Fig. 4. Calibration of the Linear Amplifier and Pulse Height Selector.

V. EXPERIMENTS AND RESULTS

Figures 5 and 6 show typical pulse height distributions obtained with the .060 inch and .011 inch crystals respectively. Electrons were accelerated from energies of 10 kev to 120 kev at intervals of 10 kev for the .060 inch crystal and 10 kev to 100 kev at varying intervals for the .011 inch crystal. In taking the data with the thin crystal the energy region of 10 kev to 50 kev received emphasis because of interest in scintillation detectors in low energy beta spectrometry. Energies of less than 10 kev could not be investigated due to the dark current of the photomultiplier. A 2 volt window was used, and counting rates were recorded for the base lines of the window. To focus the electron beam on the crystal the pulse height selector was set at some value known to be near the peak of the curve, and adjustments were made in the vertical and horizontal degaussing coils and in the gun controls in order to achieve a maximum counting rate. A total count of greater than 1000 counts, taken for nearly all the points, kept statistical fluctuations of the counting rate within 3%. To reduce fluctuations of counting rate due to any changes in magnetic fields or electron gun currents, the pulse height used to align the electron beam also acted as a standard. That is, after observation of a counting rate, the pulse height selector was returned to this standard pulse height for a standardizing count determination. In this way any fluctuation could be detected, and a correction made for it. Background determinations were made by turning the electron gun filament current off and leaving

UNCLASSIFIED
ORNL-LR-DWG. 18225

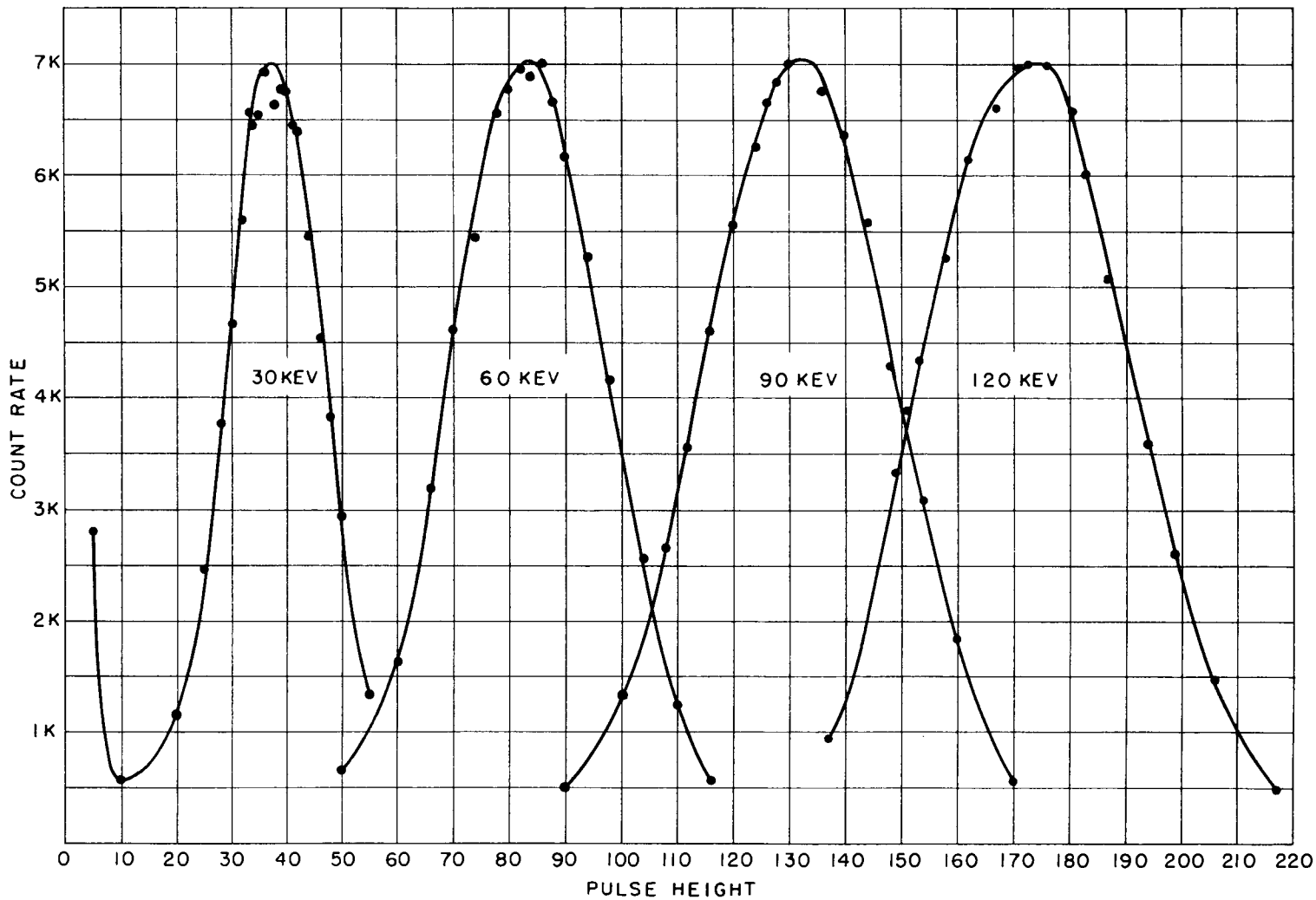

Fig. 5. Sample Pulse Height Distributions Taken with the .060 Inch Crystal.

UNCLASSIFIED
ORNL-LR-DWG. 18226

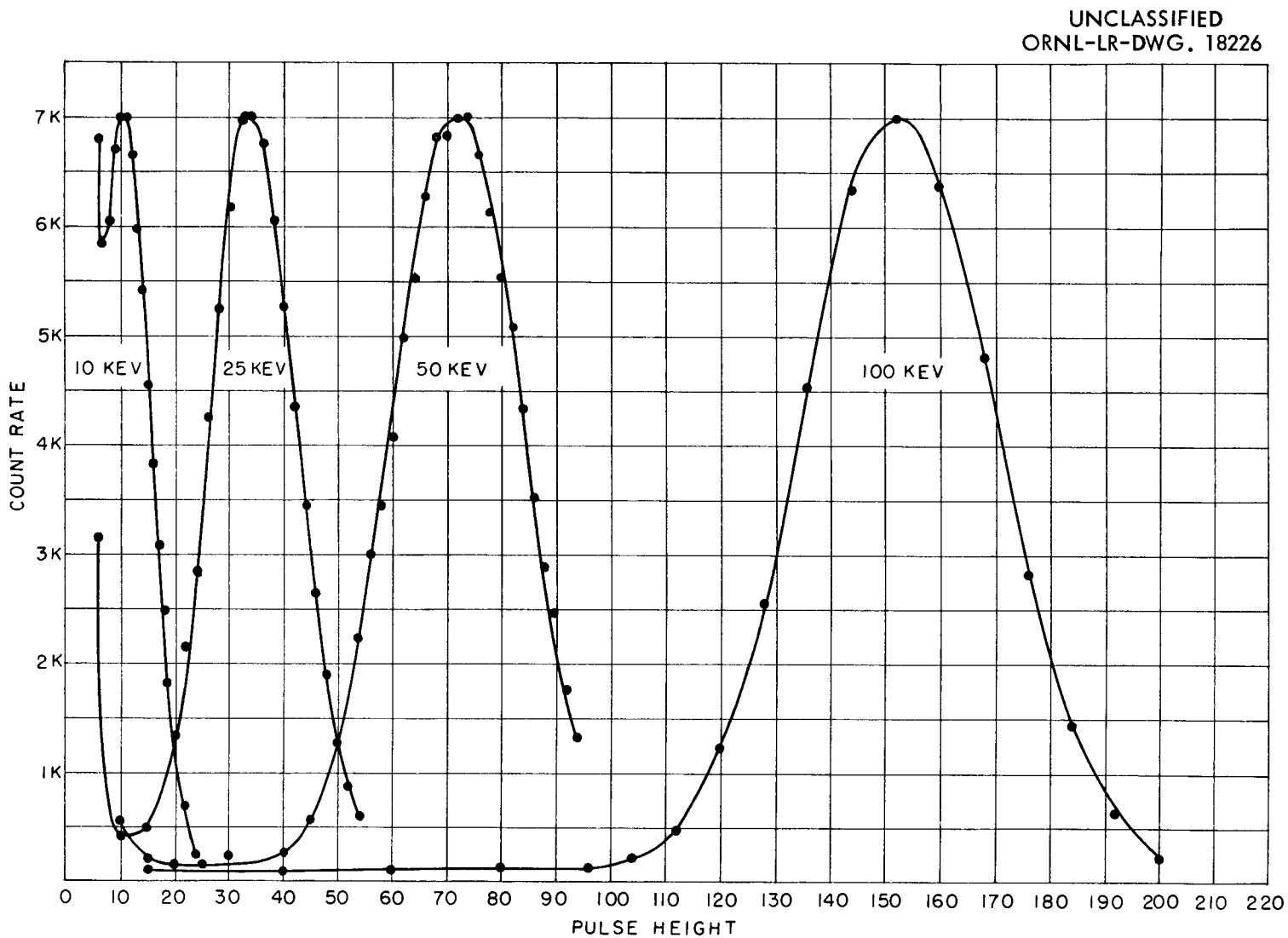

Fig. 6. Sample Pulse Height Distributions Taken with the .011 Inch Crystal.

all other adjustments as they were during the scanning of the pulse height spectra. The background count rate, of the order of 4 counts per minute, could be neglected.

The principal interest in the research was the relationship between pulse height and electron energy. The pulse heights corresponding to the peak counting rate were obtained by extrapolating the practically linear sides of each pulse height distribution until they intersected. The point of intersection determined the peak pulse height. Figures 7 and 8 are the graphs of pulse height versus energy for the .060 inch and .011 inch crystals, respectively. The points lie in a straight line within the limits of experimental error. The lines on the graphs were determined by a least squares fit and yielded intercepts on the energy axes of 4.5 kev with the .060 inch crystal and 3.5 kev with the .011 inch crystal. Appendix I gives details on the least squares calculation.

Equation (12) may be used to determine how well the experimental data fit a gaussian distribution. From (12),

$$\log_{10} G(h) = \log_{10} C - \left[\frac{\alpha^2}{a^2} \log_{10} e \right] (\Delta H)^2 \quad . \tag{25}$$

This is the equation of a straight line with $\log_{10} G(h)$ and $(\Delta H)^2$ as variables and with a slope of $\left[- \frac{\alpha^2}{a^2} \log_{10} e \right]$. Figure 9 is a plot of the experimental values obtained from the 110 kev electron data taken

UNCLASSIFIED
ORNL-LR-DWG. 18229

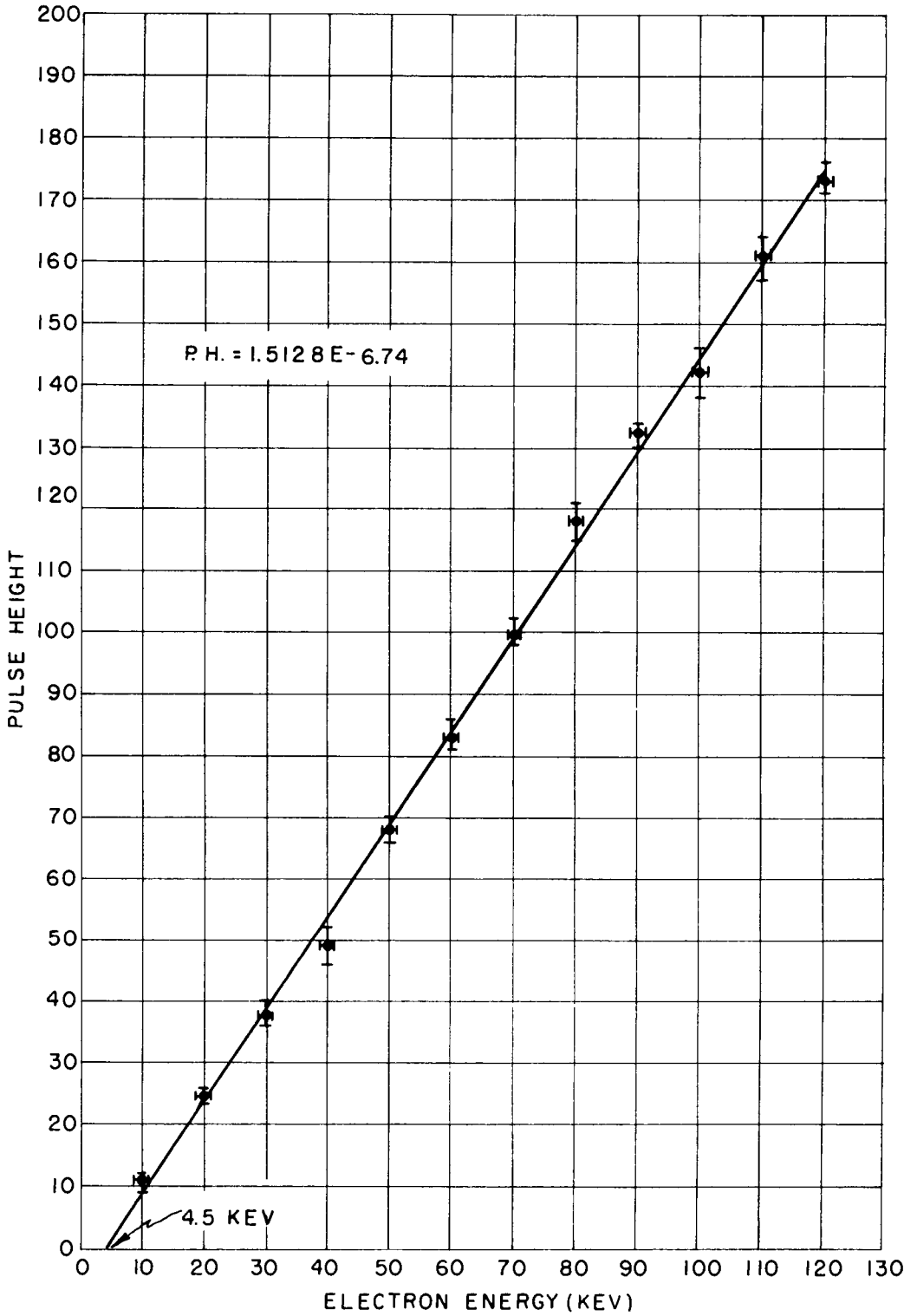

Fig. 7. Pulse Height as a Function of Electron Energy (.060 Inch Crystal).

UNCLASSIFIED
ORNL-LR-DWG. 18230

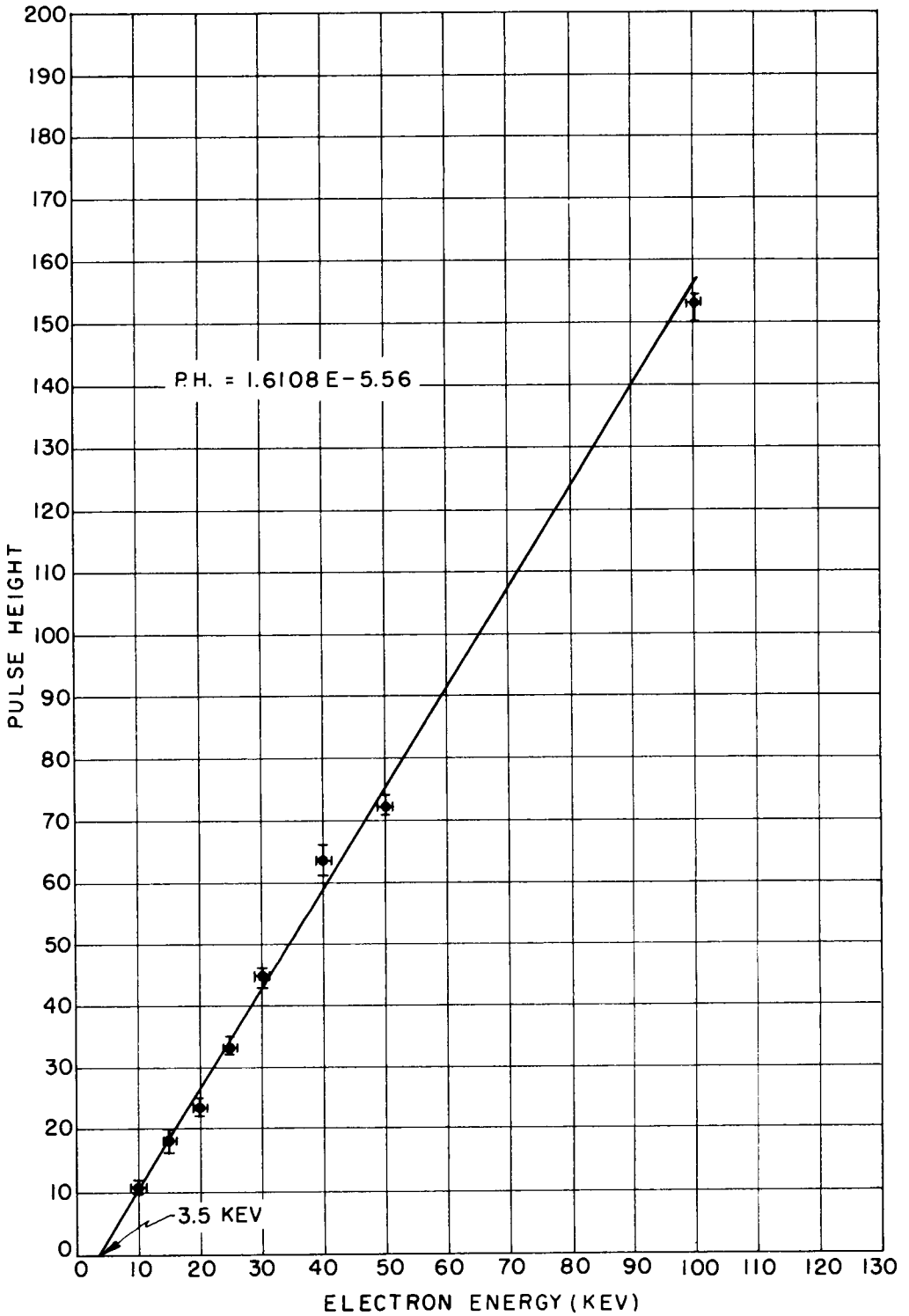

Fig. 8. Pulse Height as a Function of Electron Energy (.011 Inch Crystal).

with the .060 inch crystal. The dots represent the counting rates observed between zero pulse height and the peak pulse height, and the crosses represent the counting rates observed at pulse heights greater than the peak pulse height. The points lie in a straight line at counting rates greater than about 3000 counts/unit time.

A comparison of a typical pulse height distribution with a gaussian of the form $G(h) = C \exp \frac{\alpha^2 (H - h)^2}{a^2}$ was made. A value of 10 counts per unit time was assigned to C and by trial and error a value of 10 (phu) was decided upon for a/α. This curve was found to fit the 20 kev distribution very well as shown in Fig. 10. Similar attempts were made to fit a poisson distribution to the experimental data, but the gaussian distribution was found to be a closer approximation.

The experimentally determined values for a^2, a^2 being proportional to the square of the line half-width at 1/e times the maximum count rate, are given in Tables II and III for the data taken with the .060 inch and .011 inch crystals, respectively. Figures 11 and 12 are graphs of electron energy versus corresponding values of a^2. The lines were determined by least squares calculations. The method of calculating a^2 is given in Appendix II.

The average amount of electron energy observed in the crystal necessary to produce a photoelectron at the photocathode was calculated for each energy, and an overall average was determined. Results of these calculations are given in Tables II and III for data of the .060 inch and .011 inch crystals, respectively.

UNCLASSIFIED
ORNL-LR-DWG. 18227

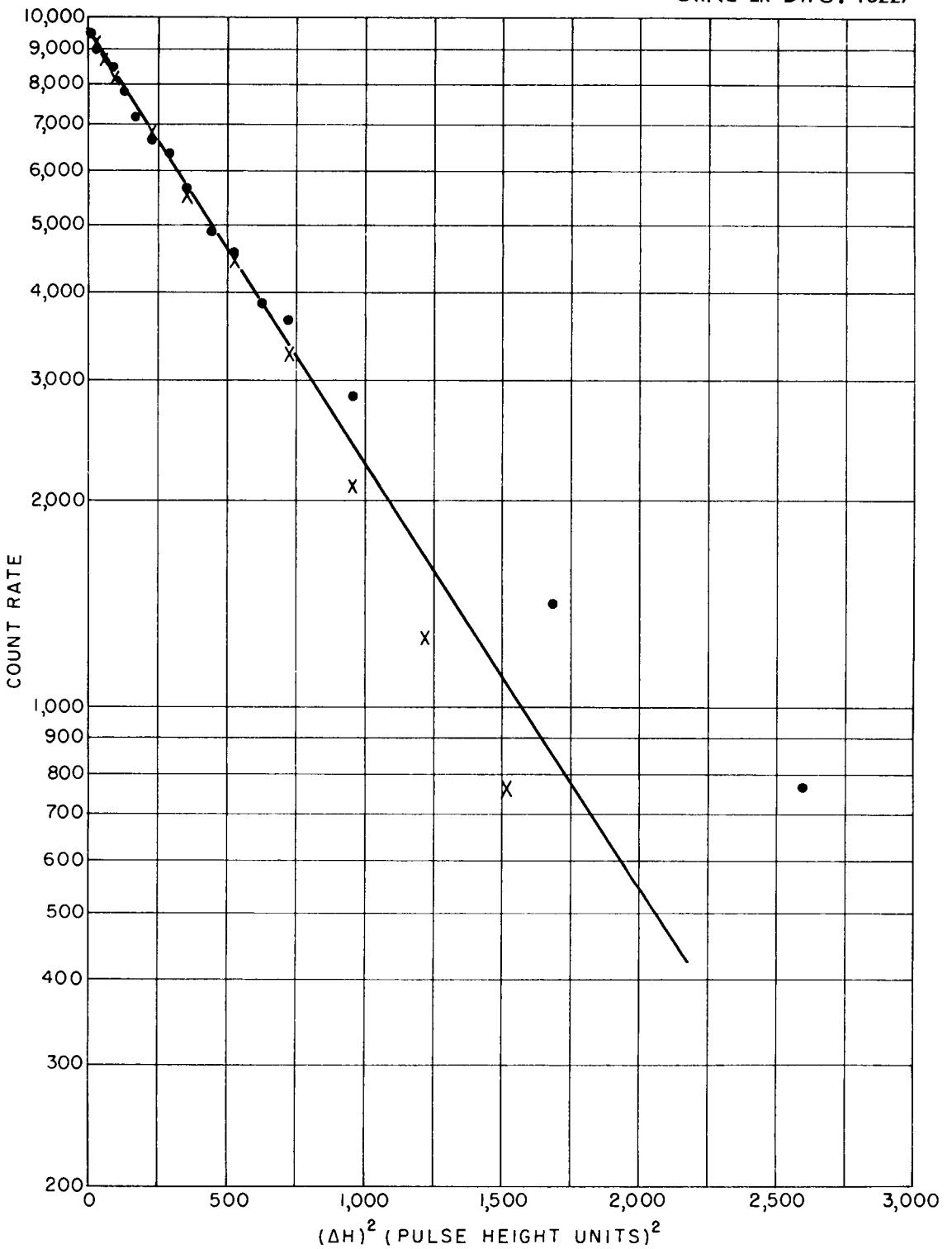

Fig. 9. Gaussian Representation of Data.

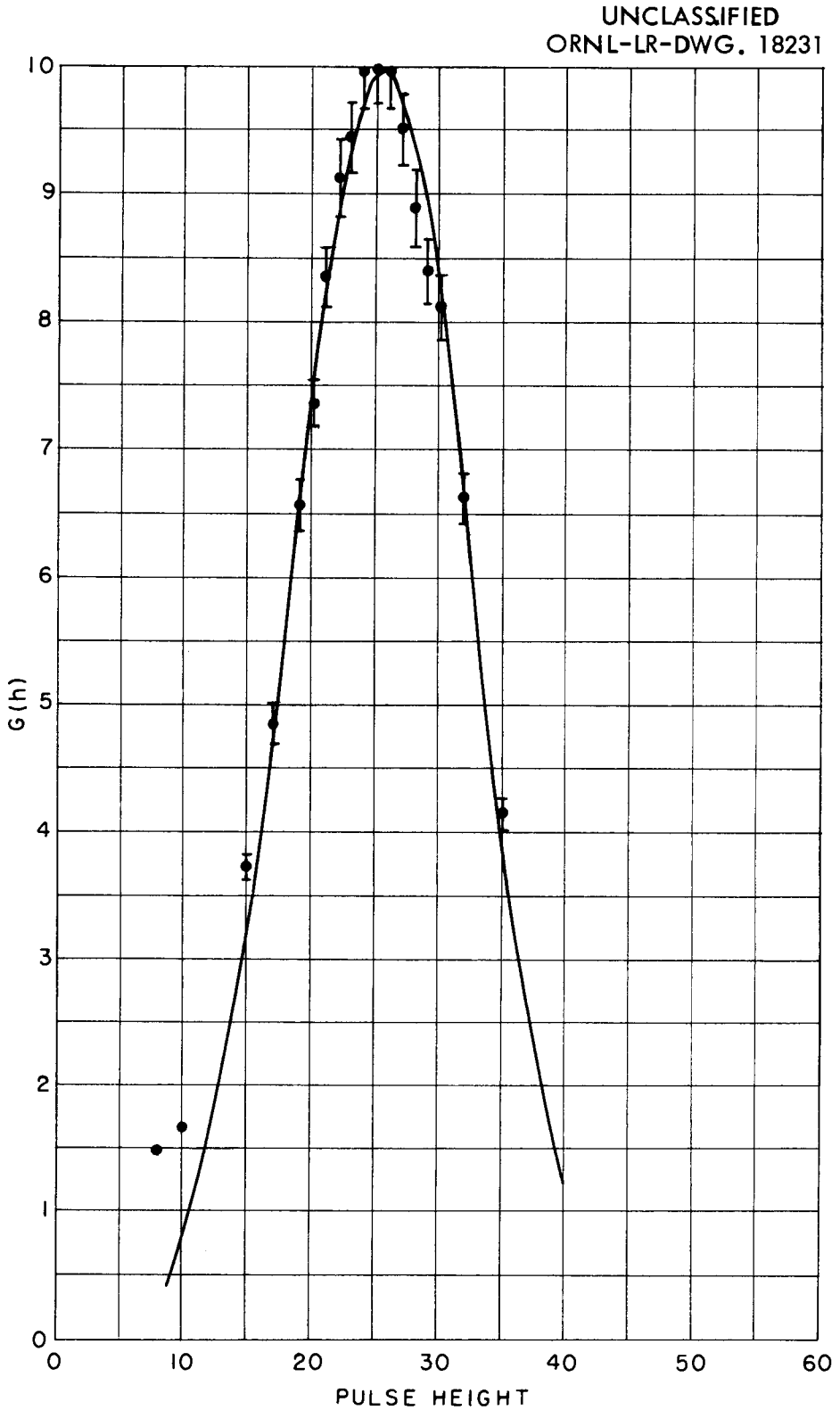

Fig. 10. Comparison of Experimental Data with a Gaussian Distribution.

Table II Line Width Data for the .060 Inch Crystal

E (kev)	a^2 $(kev)^2$	K kev/photoelectron
20	44.4 ± 5.4	1.43
30	78.3 ± 4.2	1.54
40	106.8 ± 3.2	1.51
50	145.2 ± 3.3	1.60
60	171.7 ± 11.0	1.55
70	189.7 ± 8.7	1.45
80	205.8 ± 18.1	1.36
90	259.6 ± 22.8	1.52
100	288.8 ± 16.5	1.51
110	302.6 ± 8.7	1.43
120	304.6 ± 25.8	1.32

Average K = 1.47 ± .08 kev/photoelectron

Table III Line Width Data for the .011 Inch Crystal

E (kev)	a^2 $(kev)^2$	K kev/photoelectrons
10	20.2 ± 1.8	1.55
15	32.3 ± .7	1.40
20	37.7 ± 2.0	1.14
25	55.7 ± 12.1	1.30
30	67.5 ± 5.7	1.27
40	104.4 ± 2.4	1.43
50	115.5 ± 12.0	1.24
100	241.5 ± 16.8	1.25

Average K = 1.32 ± .13 kev/photoelectron

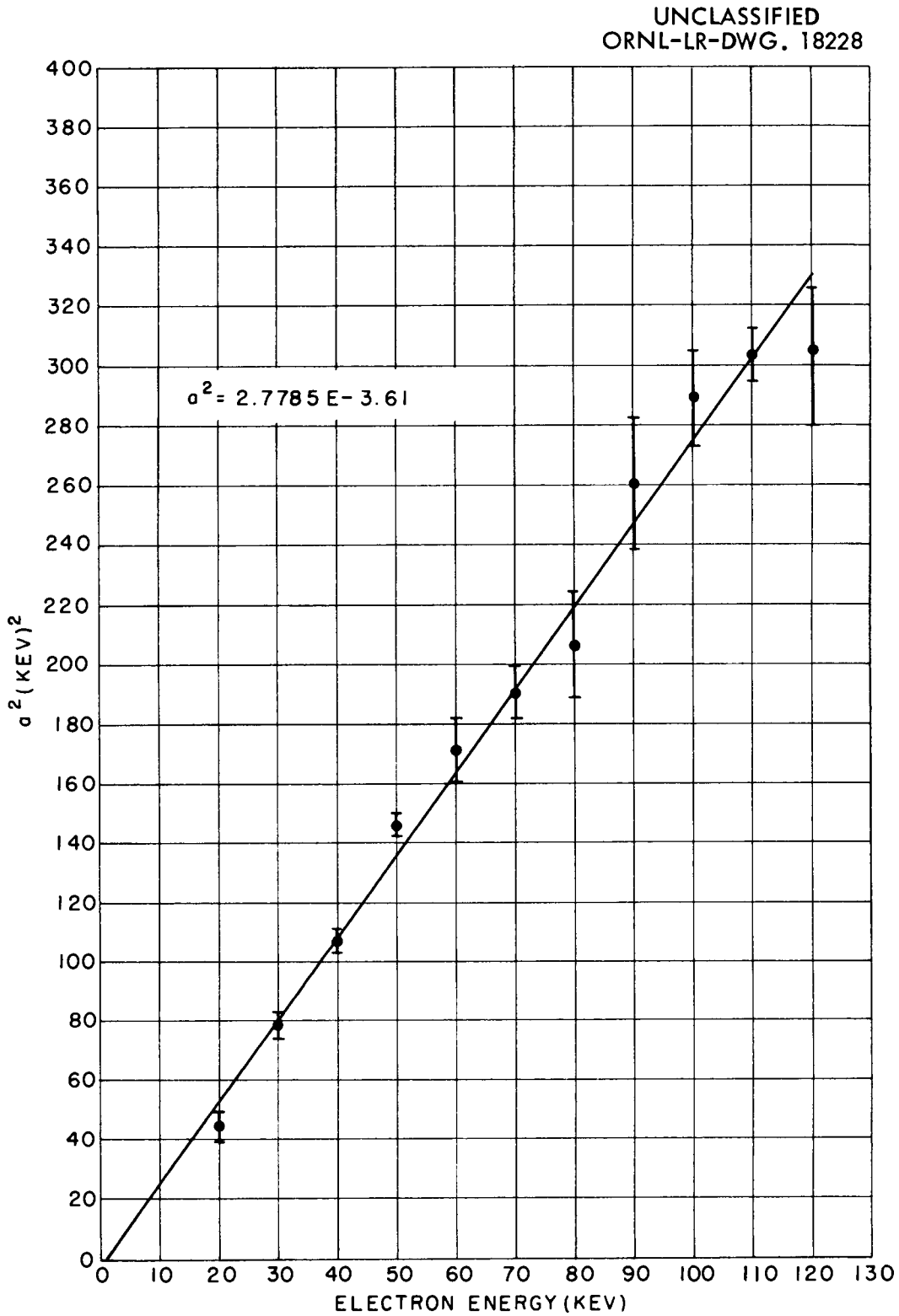

Fig. 11. a^2 as a Function of Electron Energy for the .060 Inch Crystal.

UNCLASSIFIED
ORNL-LR-DWG. 20122

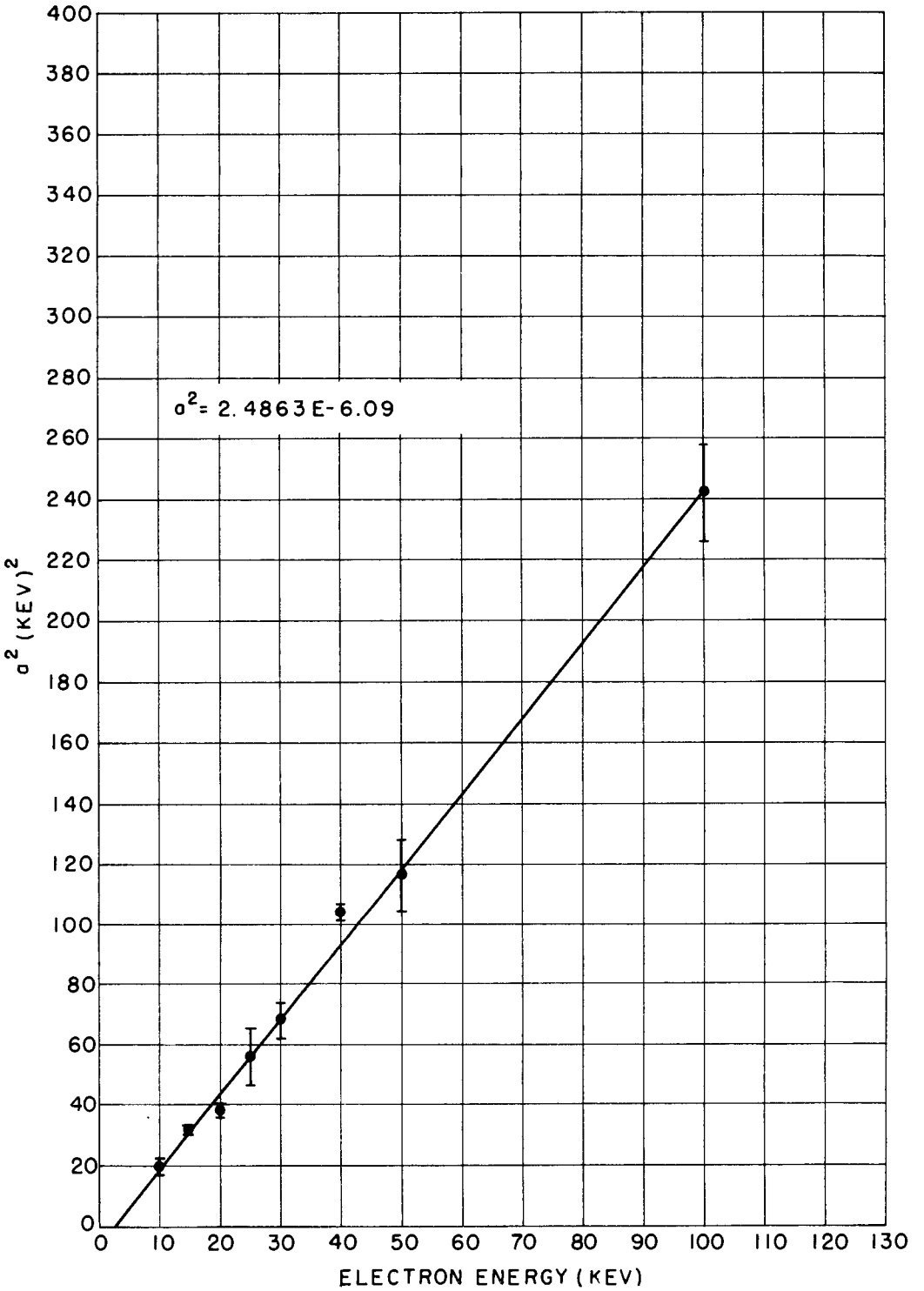

Fig. 12. a^2 as a Function of Electron Energy for the .011 Inch Crystal.

VI. DISCUSSION

For electrons of energies ranging from 10 kev to 120 kev, the pulse height response of an anthracene scintillation counter is linear with energy within experimental error as predicted by Eq. 22. Although other authors have found that a non-linear relationship exists between pulse height and energy at low (< 100 kev) energies, a careful examination of the data they present indicates that a straight line may be fitted to the data as well as the curve they use within experimental error. Apparently the non-linear region predicted by Eq. (24) lies below 10 kev for the crystals and reflector geometry employed here.

The shape of the pulse height distribution curve closely approximates a gaussian, and there is a linear relationship between energy and the square of the half widths at 1/e. This is in agreement with the results of Hopkins.[15] However, Hopkins calculated an average value of 3.3 kev/photoelectron for the amount of energy required to produce a photoelectron. The values calculated from these experiments were 1.47 $\pm$ .08 kev/photoelectron and 1.31 $\pm$ .13 kev/photoelectron for crystals of .060 inch and .011 inch thickness, respectively. This discrepancy is probably due to differences in crystal thickness and reflector geometry.

---

[15] Hopkins, J. I., Rev. Sci. Instr. 22, 29, 1951.

APPENDIX I

Sample of Least Squares Calculation

Least squares fits were made to two graphs of pulse height versus energy and to two graphs of a^2 versus energy.[16] The calculation for the pulse height versus energy curve, taken with the .060 inch crystal, is typical and is included here as an example. Let the equation of the line be $y = c + dx$, where y is the pulse height, x is the corresponding electron energy, and c and d are constants given by

$$c = \frac{\sum x_n^2 \sum y_n - \sum x_n \sum \left(x_n y_n\right)}{K \sum x_n^2 - \left(\sum x_n\right)^2} ,$$

and

$$d = \frac{K \sum \left(x_n y_n\right) - \sum x_n \sum y_n}{K \sum x_n^2 - \left(\sum x_n\right)^2} .$$

Omitting the details,

$$K = 12.$$

$$\sum x_n = 7.8 \times 10^2.$$

$$\sum y_n = 1.0991 \times 10^3.$$

$$\sum x_n^2 = 6.40 \times 10^4.$$

---

[16] Beers, Y., THEORY OF ERROR, Addison-Wesley Publishing Co., Inc., Cambridge, Massachusetts, p. 38, 1953.

$$\left(\sum x_n\right)^2 = 6.084 \times 10^5.$$

$$\sum\left(x_n y_n\right) = 9.3074 \times 10^4.$$

Using these values to calculate c and d, the equation of the line turns out to be,

$$y = -6.74 + 1.5128x \ .$$

APPENDIX II

Sample Calculation of a^2 and K

The value of a^2 determined from the peak pulse height and the pulse height at 1/e times the maximum counting rate essentially depends on the shape of the distribution at only two points. A more accurate value based on the entire distribution may be obtained by utilizing graphs of the data such as shown in Fig. 9 and utilizing Equation (25). It has already been pointed out that the shape of the line represented by (25) is given by $\left[- \frac{\alpha^2}{a^2} \log_{10} e \right]$, so that

$$a^2 = - \frac{\alpha^2 \log_{10} e}{\text{slope}} \quad . \tag{26}$$

For the 110 kev electron data taken with the .060 inch crystal

$$a^2 = \frac{(1.66)^2 \ (.4343) \ (1825 - 500)}{(3.66276 - 2.84510)}$$

$$a^2 = 302.62 \text{ kev}^2$$

where α was determined from Fig. 7, and the slope was determined from Fig. 9. The value of a^2 was not calculated for the 10 kev electron distribution taken with the .060 inch crystal due to the small number of points between the peak and the dark current.

The average electron energy required to produce a photoelectron was calculated from (11). For the 110 kev electron data taken with the .060 inch crystal,

$$K = \frac{a^2}{2(E - i)}$$

$$K = \frac{302.62}{2(110 - 4.5)}$$

$$K = 1.44 \text{ kev}$$

Other values of K were obtained similarly.

APPENDIX III

Estimation of Error

The standard deviation of the counting rates is given by the square root of the number of counts, since the counting time was taken as unity. In Figs. 5, 6, and 9 the error is less than the size of the points due to the high counting rates used.

The errors shown on the pulse height versus energy curves, Figs. 7 and 8, are estimates of how closely these quantities can be determined. The error in the calibration of the voltmeter which measured the electron energy was negligible, but there may have been some error in reading the meter. An estimate of $\pm$ 1 kev was assigned as a limit of this error. The errors drawn in the pulse heights represent the ranges in which the pulse height distribution maxima might have occurred. They were determined by inspecting the width of the distribution peaks. It was attempted to make these ranges large enough to include any variations from a gaussian distribution at the peak.

The error in the determination of a^2 by the graphical method is in the placement of the line through the points. To evaluate this error, two other lines were drawn to represent the largest and smallest slopes which could sensibly fit the data. The difference between the two extreme slopes divided by two was taken as an estimate of the error and the corresponding error in a^2 computed. These errors are listed with the values of a^2 in Tables II and III and in Figs. 11 and 12.

The errors recorded for average K in Table II and III are standard deviations computed from the ordinary equation for the standard deviation

in the average of a number of values.[17] The expression is

$$s = \sqrt{\frac{\sum\left(\Delta K_n\right)^2}{n-1}},$$

where s is the standard deviation of the average value, $\left(\Delta K_n\right)$ is the deviation of each K from the average, and n is the number of values of K being averaged.

BIBLIOGRAPHY

Beers, Y., THEORY OF ERROR, Addison-Wesley Publishing Co., Inc., Cambridge, Massachusetts, 1953.

Birks, J. B., "Scintillations from Organic Crystals: Specific Fluorescence and Relative Response to Different Radiations," Proc. Phys. Soc. (London) 64A, 874, 1951.

Birks, J. B., SCINTILLATION COUNTERS, McGraw-Hill Book Co., Inc., New York, New York, 1953.

Breitenberger, E., PROGRESS IN NUCLEAR PHYSICS, Vol. 4, Chap. 2, (Frisch ed.)., Pergammon Press, New York, New York, 1955.

Dwight, H. B., TABLES OF INTEGRALS AND OTHER MATHEMATICAL DATA, McMillan Co., New York, New York, 1934.

Fowler, J. M., and Roose, C. E., Response of Anthracene and Stilbene to Low-Energy Protons and X-Rays, Phys. Rev. 98, 996, 1955.

Glocker, R., "Die Abhangigkeit der Reichweite der Elektronen von ihre Energie," Zeits. f. Naturforsh 3A, 147, 1948.

Hopkins, J. I., "The Response of the Anthracene Scintillation Counter to Monoenergetic Electrons," Phys. Rev. 77, 406, 1950.

Jordan, W. H. and Bell, P. R., "Scintillation Counters, Nucleonics 5, 30, 1949.

Kallman, H., ELECTRON AND NUCLEAR COUNTERS, Chap. 8, (Korff ed.), D. Van Nostrand Co., Inc., New York, New York, 1955.

Lane, R. O., and Zaffarano, D. J., ISC-439. Available from the Technical Information Service, Oak Ridge, Tennessee.

Libby, W. F., "Measurement of Radioactive Tracers," Anal. Chem. 19, 2, 1947.

Morton, G. A., "Photomultipliers for Scintillation Counting," R.C.A. Rev. 10, 525, 1949.

Morton, G. A., and Mitchell, J. A., "Performance of 931-A Type Multipliers as a Scintillation Counter," Nucleonics 4, 16, 1949.

Robinson, W. H., and Jentshke, W., "Response of Anthracene Scintillation Crystals to Monoenergetic Soft X-Rays, Phys. Rev. 95, 1413, 1954.

Swank, R. W., "Recent Advances in Theory of Scintillation Phosphors," Nucleonics 13, 14, 1954.

Taylor, C. J, Jentschke, W. K., Remley, M. E., Eby, F. S., and Kruger, P. G., "Response of Some Scintillation Crystals to Charged Particles," Phys. Rev. 84, 1034, 1951.

Wright, G. T., "Scintillation Response of Organic Phosphors," Phys. Rev. 91, 1282, 1953.

Wright, G. T., "Scintillation Response of Anthracene Crystals to Short Range Electrons," Phys. Rev. 100, 588, 1955.