MARTIN MARIETTA ENERGY SYSTEMS LIBRARIES
3 4456 0361188 4

[redacted]

CENTRAL RESEARCH LIBRARY
DOCUMENT COLLECTION

AEC RESEARCH AND DEVELOPMENT REPORT

ORNL-2383 cy. 69A
C-85 - Reactors-Aircraft
Nuclear Propulsion Systems

DECLASSIFIED
CLASSIFICATION CHANGED
BY AUTHORITY OF
BY

A STUDY OF REACTOR-INDUCED AIR GLOW

R. W. Peelle
F. C. Maienschein
R. G. Cochran
K. M. Henry
T. A. Love

CENTRAL RESEARCH LIBRARY
DOCUMENT COLLECTION
LIBRARY LOAN COPY
DO NOT TRANSFER TO ANOTHER PERSON
If you wish someone else to see this document, send in name with document and the library will arrange a loan.

[redacted]

OAK RIDGE NATIONAL LABORATORY
OPERATED BY
UNION CARBIDE NUCLEAR COMPANY
Division of Union Carbide Corporation
UCC
POST OFFICE BOX X · OAK RIDGE, TENNESSEE

[redacted]

RESTRICTED DATA
This document contains Restricted Data as defined in the Atomic Energy Act of 1954. Its transmittal or the disclosure of its contents in any manner to an unauthorized person is prohibited.

[redacted]

LEGAL NOTICE

This report was prepared as an account of Government sponsored work. Neither the United States, nor the Commission, nor any person acting on behalf of the Commission:

A. Makes any warranty or representation, express or implied, with respect to the accuracy, completeness, or usefulness of the information contained in this report, or that the use of any information, apparatus, method, or process disclosed in this report may not infringe privately owned rights; or

B. Assumes any liabilities with respect to the use of, or for damages resulting from the use of any information, apparatus, method, or process disclosed in this report.

As used in the above, "person acting on behalf of the Commission" includes any employee or contractor of the Commission to the extent that such employee or contractor prepares, handles or distributes, or provides access to, any information pursuant to his employment or contract with the Commission.

OAK RIDGE NATIONAL LABORATORY
OPERATED BY
UNION CARBIDE NUCLEAR COMPANY
UCC
POST OFFICE BOX X
OAK RIDGE, TENNESSEE

August 20, 1958

CRL

Report No.: ORNL-2383 Copy 70A 69A Classification: Secret

Author(s): R. W. Peelle, F. C. Maienschein

Subject: A Study of Reactor-Induced Air Glow

Request compliance with indicated action:

ORNL-2383 Erratum

The last line of page 1 should read "1-watt tungsten lamp" not "10-watt tungsten lamp."

N. T. Bray

N. T. Bray, Supervisor
Laboratory Records Department
Technical Information Division

NTB:WCB:dbt

ORNL:RC

[redacted]

C-85 Propulsion Systems

ORNL-2383

This document consists of 36 pages.

Copy 69 of 200 copies. Series A

Contract No. W-7405-eng-26

Applied Nuclear Physics Division

A STUDY OF REACTOR-INDUCED AIR GLOW

Work Performed by:

R. G. Cochran
K. M. Henry
T. A. Love
F. C. Maienschein
R. W. Peelle

Report Written by:

R. W. Peelle
F. C. Maienschein

Date Issued

DEC 3 1957

OAK RIDGE NATIONAL LABORATORY
Operated by
UNION CARBIDE NUCLEAR COMPANY
A Division of Union Carbide and Carbon Corporation
Post Office Box X
Oak Ridge, Tennessee

[redacted]

[redacted]

SYSTEMS LIBRARIES

3 4456 0361188 4

ORNL-2383
C-85 - Reactors-Aircraft
Nuclear Propulsion Systems
TID-3679 (20th ed. Rev.)

INTERNAL DISTRIBUTION

1. D. S. Billington
2. F. F. Blankenship
3. E. P. Blizard
4. A. L. Boch
5. C. J. Borkowski
6. G. E. Boyd
7. E. J. Breeding
8. R. B. Briggs
9. A. D. Callihan
10. D. W. Cardwell
11. C. E. Center (K-25)
12. R. A. Charpie
13. C. E. Clifford
14. F. L. Culler
15. L. B. Emlet (K-25)
16. D. E. Ferguson
17. A. P. Fraas
18. J. H. Frye, Jr.
19. E. Guth
20. C. S. Harrill
21. K. M. Henry
22. H. W. Hoffman
23. A. Hollaender
24. A. S. Householder
25. W. H. Jordan
26. G. W. Keilholtz
27. F. L. Keller
28. M. T. Kelley
29. J. A. Lane
30. R. S. Livingston
31. H. G. MacPherson
32. W. D. Manly
33. J. R. McNally
34. K. Z. Morgan
35. F. C. Maienschein
36. J. P. Murray (Y-12)
37. M. L. Nelson
38. R. W. Peelle
39. A. M. Perry
40. H. W. Savage
41. A. W. Savolainen
42. E. D. Shipley
43. A. Simon
44. M. J. Skinner
45. A. H. Snell
46. J. A. Swartout
47. E. H. Taylor
48. A. M. Weinberg
49. C. E. Winters
50. C. D. Zerby
51. W. Zobel
52. F. L. Friedman (consultant)
53. H. Goldstein (consultant)
54. H. Hurwitz (consultant)
55. L. W. Nordheim (consultant)
56. R. R. Wilson (consultant)

57-59. ORNL - Y-12 Technical Library, Document Reference Section
60-67. Laboratory Records Department
68. Laboratory Records, ORNL R.C.
69-70. Central Research Library
71. Health Physics Library
72. Reactor Experimental Engineering Library

EXTERNAL DISTRIBUTION

73. Air Research and Development Command (RDGN)
74. Air Research and Development Command (RDTAPS)
75-88. Air Research and Development Command (RDZPSP)
89. Air Technical Intelligence Center
90. Air University Library
91-93. ANP Project Office, Convair, Fort Worth
94. Argonne National Laboratory
95. Armed Forces Special Weapons Project, Sandia
96. Armed Forces Special Weapons Project, Washington

97. Assistant Secretary of the Air Force, R&D
98-103. Atomic Energy Commission, Washington
104. Bettis Plant (WAPD)
105. Bureau of Aeronautics
106. Bureau of Aeronautics General Representative
107. BAR, Aerojet General, Azusa
108. BAR, Convair, San Diego
109. BAR, Glenn L. Martin, Baltimore
110. BAR, Goodyear Aircraft, Akron
111. BAR, Grumman Aircraft, Bethpage
112. Bureau of Ships
113. Bureau of Yards and Docks
114. Chicago Operations Office
115. Chicago Patent Group
116. Curtiss-Wright Corporation
117-120. General Electric Company (ANPD)
121. Hartford Area Office
122. Idaho Operations Office
123. Knolls Atomic Power Laboratory
124. Lockland Area Office
125. Los Alamos Scientific Laboratory
126. Marquardt Aircraft Company
127. National Advisory Committee for Aeronautics, Cleveland
128. National Advisory Committee for Aeronautics, Washington
129. Naval Air Development Center
130. Naval Air Material Center
131. Naval Air Turbine Test Station
132. Naval Research Laboratory
133. Nuclear Development Corporation of America
134. Office of Naval Research
135. Office of the Chief of Naval Operations (OP-361)
136. Patent Branch, Washington
137-140. Pratt and Whitney Aircraft Division
141. San Francisco Operations Office
142. Sandia Corporation
143. Sandia Corporation, Livermore
144. School of Aviation Medicine
145. USAF Headquarters
146. USAF Project Rand
147. U. S. Naval Radiological Defense Laboratory
148-149. University of California Radiation Laboratory, Livermore
150-167. Wright Air Development Center (WCOSI-3)
168-182. Technical Information Service Extension, Oak Ridge
183. Division of Research and Development, AEC, ORO

184-186. Air Force Ballistic Missile Division
187-188. AFPR, Boeing, Seattle
189. AFPR, Boeing, Wichita
190. AFPR, Curtiss-Wright, Clifton
191. AFPR, Douglas, Long Beach
192-194. AFPR, Douglas, Santa Monica
195. AFPR, Lockheed, Burbank
196-197. AFPR, Lockheed, Marietta
198. AFPR, North American, Canoga Park
199. AFPR, North American, Downey
200. Air Force Special Weapons Center

[redacted]

TABLE OF CONTENTS

		Page No.
	Abstract	1
I.	Introduction and Survey of Literature	2
II.	Experimental Apparatus	6
III.	Qualitative Results	13
IV.	Quantitative Results	19
V.	Comparison of Results with Results of Other Investigations	22
VI.	Estimated Air Glow Around a Nuclear-Powered Aircraft	25
App.	Estimate of Integrated Gamma-Ray Dose Rate in the Glow Scope Tube	26

[redacted]

[redacted]

ABSTRACT

An experiment was performed to measure the luminosity in air which accompanies the ionization generated by reactor radiations. Using the Bulk Shielding Reactor as the source of radiation, the light output of an enclosed volume of air was measured as a function of the air pressure, the time after reactor shutdown, and the water thickness between the enclosed volume and the BSR face. It was found that the light given off at a given air pressure was roughly proportional to the gamma-ray dose rate. At a pressure of 1 atm, the light production in air was found to be $(8 \pm 4) \times 10^{-15}$ $\left[(\text{lumen/cc})/(\text{r/hr})\right]$. Argon has a comparable luminous efficiency. While a radiation-induced air glow around a nuclear-powered aircraft will depend upon the reactor-shield design, light emitted from the region around a typical nuclear-powered aircraft is estimated to be equivalent to that of a [redacted]-watt tungsten lamp.

[redacted]

I. INTRODUCTION AND SURVEY OF LITERATURE

The operational usefulness of any nuclear-powered aircraft depends to some extent upon any peculiar properties it may possess with respect to its own detection. The effect of the ion cloud produced in the vicinity of the aircraft upon the propagation of radio waves has been considered,[1] but in recent times more attention has been given to the visible light which might be produced. The importance of this light output varies according to the time of day and lunar month, and to some extent upon the ease with which nuclear-powered aircraft can be detected by radar. Presumably the light given off would be considered important if the casual observer could detect a nuclear-powered aircraft high in the night sky.

The problem of radiation-induced air glow has been treated directly in the past by several authors.[2,3] Welton[4] based an estimate of the intensity of the light around a reactor upon the assumption that the radiated light per unit energy emitted from ion recombination would be constant over the energy range from 0 to 30 ev, and zero elsewhere. He then took the fraction of this total spectrum which would be within the "visible" region and found that the luminous efficiency of the air glow should be about 0.05. That is, 5% of the energy dissipated by the reactor as ionization in the air would eventually find its way into the region of the spectrum visible to the human eye. Faulkner[3] obtained an estimate of the luminous efficiency by considering observations which have been reported[5] on the visual appearance of polonium alpha-ray source. This estimate resulted in a value of 2×10^{-9} for the luminous efficiency. The wide variation between these estimates led to the experiment here described.

---

1. P. R. Bell, "Effect of Atmospheric Ionization on Transmission of Radio Waves Near a Nuclear Power Plant," RAD-269 (Aug. 4, 1947).
2. C. E. Moore, "Visual Detectability of Aircraft at Night," LAC-15 (Aug. 14, 1953).
3. J. E. Faulkner, "Visible Light Produced in Air Around Reactors," ORNL-CF-54-8-99 (Aug., 1954).
4. T. A. Welton, as quoted by C. E. Moore, op. cit.
5. J. G. Hoffman, "Radiation Doses in the Pajarito Accident of May 21, 1946," LA-687 (May 26, 1948).

In addition to the direct estimates made of a reactor-induced air glow, a considerable amount of other information is available on the production of light by ionizating radiation in gases. This information may be classified into two groups. The first group includes measurements made of the spectrum of light produced in air by alpha particles or gamma rays, and the second group consists mostly of measurements made on individual photon emissions from an irradiated gas. The results of these two types of investigations are summarized below.

One spectral measurement was attempted by Ortner and Salim,[6] who used a 4-mc polonium alpha particle source. They succeeded in obtaining some data, but gave no numerical relative intensity measurements. They did observe a coarse unidentifiable band structure which contained strong components in the medium and longer wave-length regions of the visible spectrum. Drummeter and Curico[7] have more recently measured the light emission spectrum from a water solution containing about 6000 curies of the Ba^{140}-La^{140} parent-daughter combination. A periscope arrangement was used to allow the spectrometer to view the air glow around the solution through a focussing mirror system. However, apparently the solution was contained in a transparent container, so this spectrum included not only the light produced in air but also that produced in the water in which the radioactive material was dissolved. These investigators discovered a continuous spectrum upon which a number of readily observable bands were superimposed. Twelve of these bands were identified with experimental error to correspond to the bands from molecular nitrogen excitation, all but one of them originating in un-ionized nitrogen. All these identified bands are in the violet or blue, but it should be noted that the continuous spectrum became very strong in the longer wave-length region. The plates used apparently were not sensitive above

---

6. G. Ortner and S. Salim, "Light Emission from Polonium," Nature 169, 1060 (June 21, 1952).
7. L. F. Drummeter, Jr., and J. A. Curico, "A Spectrum of the Glow from a Radioactive Source," NRL-4583 (June 24, 1955).

about 5000 Å. The presence of the water as a light source in these measurements confuses further interpretation.

The workers[8,9] who studied the emission of visible light photons from alpha particle-irradiated gases used photomultiplier tubes. Their results may be summarized as follows:

1. If an electric field is impressed across an irradiated volume of gas, the intensity of light emission does not change. This implies that ion recombination is not an important process for light production.
2. Gases such as O_2 and CO_2 have quantum yields of visible or near-visible light many times (about 100) smaller than N_2, A, or He. Thus pure nitrogen would be expected to give the same photon emission as air. This was observed.
3. For a given gas and pressure, the light output is proportional to the amount of ionization in the gas.
4. The lifetime of the excited states responsible for the production of visible light is less than 10^{-6} sec.
5. The light output as a function of pressure for nitrogen showed[9] a saturation phenomenon which can be represented by the equation

$$\text{Rate of photon emission} = \frac{AP}{1 + KP}$$

where A and K are constants, and P is the pressure of nitrogen. The determined constants were such that the light production became stationary for pressures above 20 cm Hg. A formula of the type given above may be obtained analytically under the assumption of collision-quenching of fluorescence in excited gas molecules.
6. In one case[8] the quantity of light emission from air at normal pressure was reported to be about 10^3 photons/alpha particle.

---

8. A. E. Grün and E. Schopper, "Über die Fluoreszenz von Gasen bei Anregung durch α-Teilchen," Z. Naturf. 6a, 698-700 (Aug. 1951).
9. A. Ward, "The Emission of Light in the Passage of Alpha Particles Through Gases," Proc. Phys. Soc. (London) A67, 841-46 (Sept. 1954).

The photons were thought to have energies corresponding to wave lengths between 3000 Å and 4000 Å. In the other case,[9] a result of 150 "equivalent photons" per alpha particle was given. An equivalent photon is one having a wave length equivalent to the maximum of the photomultiplier spectral sensitivity, so the true number of photons per alpha particle must be much larger than 150. The spectral distribution of the photon source was not estimated.

In the experiment reported on the following pages the luminosity of a small body of air near the Bulk Shielding Reactor was observed through a periscope in the expectation that the results could be extrapolated to the case of a reactor and reactor shield entirely surrounded by air.

II. EXPERIMENTAL APPARATUS

The experimental apparatus consisted of the water-reflected Bulk Shielding Reactor[10] which served as the source, an adjacent air-filled aluminum tube resembling a simple periscope, and light detectors which were located above the pool water level at the upper end of the air-filled tube (see Fig. 1). This tube, which is referred to as the "glow scope," was constructed with bends so that no straight-line void, which would constitute a personnel hazard during the measurements, was formed through the water shield. The two mirrors used at the bends were aluminized on the front surfaces and blackened on the edges to prevent the escape of light from the interior of the glass. All of the material exposed to the high radiation field near the bottom of the tube was 2S aluminum. The distance between the reactor and the end of the glow scope was readily variable, allowing the measurement of the attenuation through water of whatever reactor radiation might cause any observed luminosity.

The glow scope was connected to a pair of mechanical vacuum pumps so that the air pressure inside the tube, which was measured with oil and/or mercury manometers, could be varied. All air introduced into the tube was thoroughly dried with calcium sulphate and phosphorus pentoxide drying tubes arranged in series. Gases other than air could also be introduced into the tube either directly from gas cylinders or through the drier. A lucite pressure seal at the top of the tube protected the light detection apparatus from pressure fluctuations.

Three types of detectors were used to measure the light from the air glow: the human eye, a fast spectrograph, and photomultiplier tubes. The eye has a strong advantage in that visibility to the eye of the flying aircraft is the final criterion. However, the lack of quantitative response under the conditions imposed by the experiment made the eye useless except in an extremely qualitative way.

The spectrograph offered a firm method of obtaining good information about the light spectrum, which data might be most important in any attempt

---

10. This reactor has been described in various reports; see, for example, W. M. Breazeale, "The New Bulk Shielding Facility at Oak Ridge National Laboratory," ORNL-991 (May 8, 1951).

UNCLASSIFIED
ORNL-LR-DWG 3651

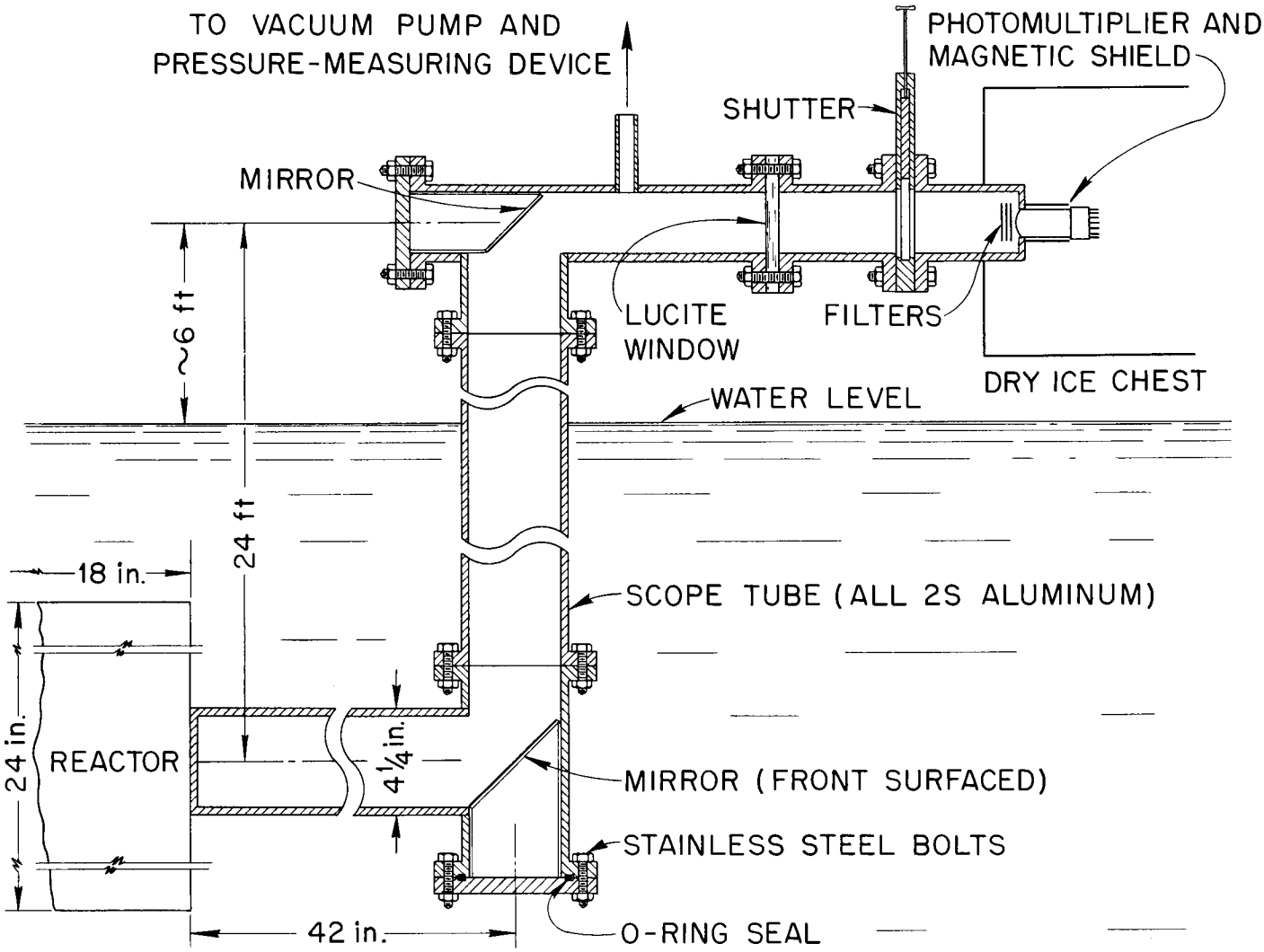

Fig. 1. Cutaway View of the Glow Scope

to analyze the process of light production; however, spectrographic techniques generally do not have a high sensitivity, and absolute photographic intensity measurements are in any case quite difficult. Eastman 103-F spectroscopic film and various process films were used in attempts to measure the light spectrum with an f/1.1 low dispersion spectrograph.* Light arriving at the end of the tube was focussed approximately upon the slits of this instrument by a large condensing lens having the diameter of the aluminum tube. The spectrograph was successfully calibrated using the lines of the mercury spectrum, but several attempts to measure the air glow spectrum failed completely because of the lack of sufficient intensity.

Photomultiplier tubes seemed to be the best means of obtaining quantitative data on the behavior of the light output as a function of the parameters that could be varied in the experiment, as well as the most convenient method of obtaining an absolute value for the luminosity produced. In general, any light produced in the glow scope could be detected by a photomultiplier tube mounted at the upper end of the glow scope. The photomultiplier tube and the end of the aluminum tube were enclosed in a large dry ice chest which maintained the photocathode at a reasonably constant low temperature. This procedure greatly reduced the dark current in the photomultiplier, which current was monitored at frequent intervals throughout the experiment by closing the light shutter shown in Fig. 1.

Figure 2 shows a block diagram of the electronic apparatus. A well-stabilized scintillation counter high-voltage supply was used to ensure that the drift from this source was negligible. The voltage-dropping resistors for the multiplier dynodes were mounted outside the ice chest containing the phototube to prevent possible phototube gain drifts caused by the temperature coefficient of these resistors. The current from the multiplier anode was measured with a high-sensitivity Leeds and Northrup D.C. microammeter having chopper stabilization. The most sensitive scale on this instrument read full scale for an input current of 10^{-9} amp, so readings

---

*The authors are indebted to the ORNL Biology Division, particularly to W. A. Arnold, for the loan of their spectrograph.

UNCLASSIFIED
2-01-058-0-222

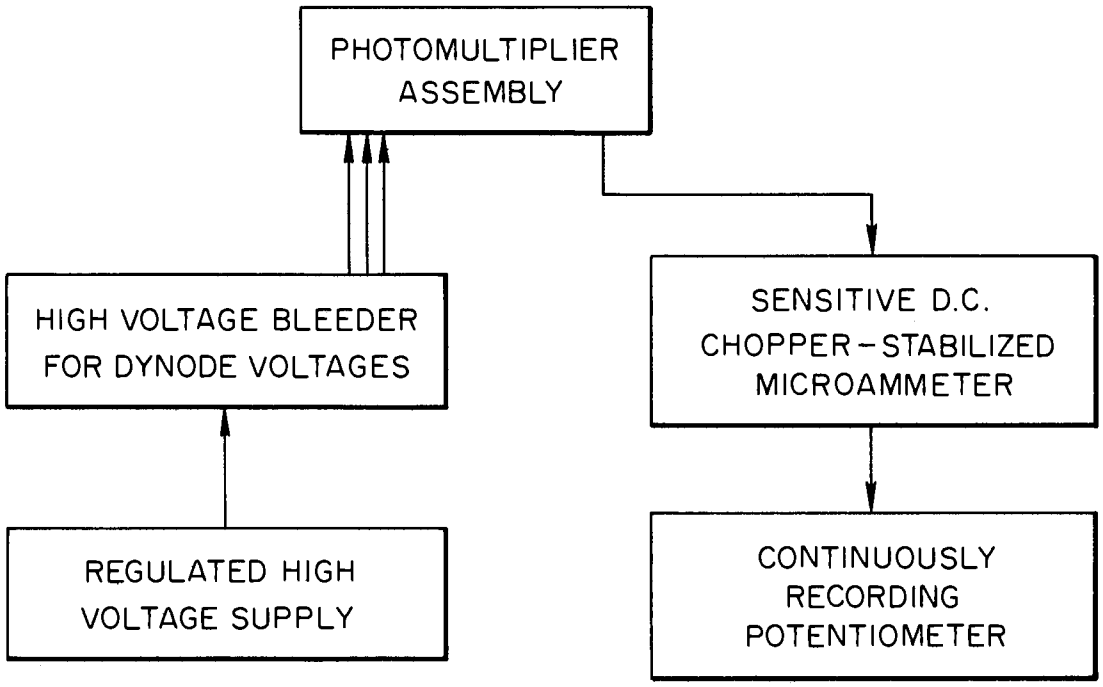

Fig. 2. Block Diagram of the Electronic Equipment Associated with the Photomultiplier Light Measurement Apparatus.

could be obtained for currents as small as 10^{-11} amp. The continuous recording of the microammeter output on a Brown potentiometer permitted ready determination of the degree of stability of the current readings.

Any discussion of the quantitative use of a photomultiplier tube to measure a light intensity must deal with the spectral sensitivity of the tube used, and also with its sensitivity relative to noise. In this experiment the approach to these problems depended upon the type of measurement being made. One type of measurement was for the determination of the source of the air glow, so that proper extrapolation might be made to the case of an operating reactor. This type of measurement necessitated the variation of parameters which would induce wide variations in the light output; therefore, a detector with high sensitivity was required. Another type of measurement was for an absolute determination of the luminosity for a known nuclear radiation field. This absolute determination required only a detector sensitive enough to obtain one reading under conditions of maximum light output. With a photomultiplier tube the optimum sensitivity is obtained using that voltage across the tube which yields the highest ratio of photocurrent to thermionic dark current for a given light source. Since the optimum high voltage for a given tube is usually about 500 v or less, the useable photomultiplier current-gain is limited.

For those measurements requiring large variations of light intensity an RCA type C-7140A photomultiplier tube was used. This tube is particularly sensitive in the violet end of the spectrum, and therefore possessed a high sensitivity relative to dark current. If the spectrum of the air glow had been known, then this detector could have been used and the analysis completed. Without this spectrum a tube with such characteristics could not be used for the absolute measurement of luminosity, however, because for such a measurement each portion of the light spectrum incident upon the detector must be weighed according to the sensitivity of the eye at that wave length. This weighing is very difficult, particularly because of the Purkinje effect, which is the shifting of the whole spectral sensitivity of the eye toward the violet under conditions of low light intensity.

The method used for the absolute determination of the luminosity of the air in the glow scope was an attempt to reproduce the spectral sensitivity of the eye with a photomultiplier tube. This was accomplished by the use of an RCA-6217 photomultiplier tube coupled with Corning filters Nos. 3307 and 3389. Figure 3 compares the relative spectral sensitivities of the eye for surface brightnesses of 1 and 10^{-5} millilamberts with the two photomultiplier detectors described above. Also shown is the emissivity of a black body of 2000°K. The latter is shown because the "eye sensitive" photomultiplier tube was given an absolute calibration by placing a Westinghouse No. 49 pilot lamp at the lower end of the glow scope. Calibration in this manner presumably cancels out any effects due to the mirrors, reflection along the walls of the tube, etc. This assumption is not strictly true because the reflectivity of aluminum is a function of wave length. Similarly, the curve in Fig. 3 representing the response of the C7140A tube is not quite accurate because light corresponding to the extreme violet end of the sensitivity curve shown would have difficulty in reaching the detector from the far end of the glow scope because of the decrease in the light reflectivity of aluminum at short wave lengths.

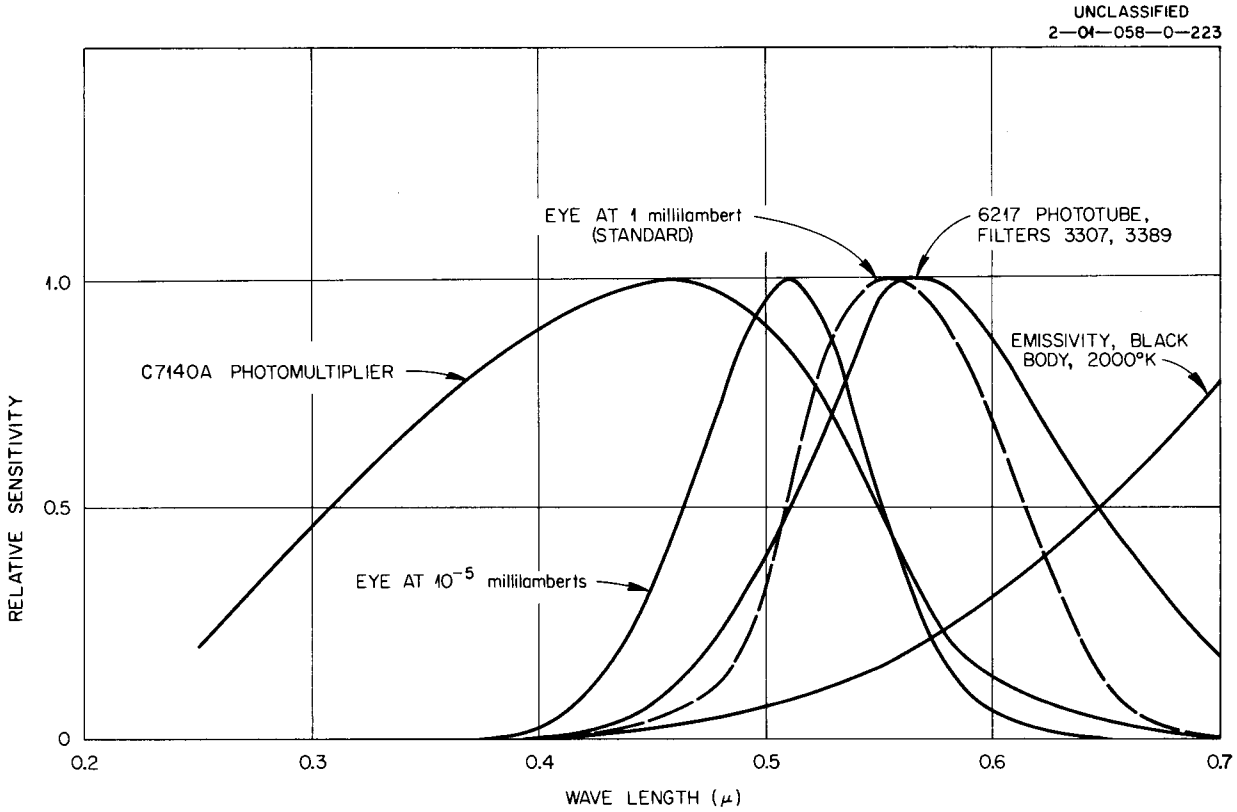

Fig. 3. Relative Spectral Sensitivities of Light Detectors Used, Together with Relative Emissivity of a "Black Body" at 2000°K.

The two curves showing the relative spectral sensitivity of the eye at two levels of surface brightness illustrate the Purkinje effect (Ref. 11). Neither photomultiplier tube has been modified in nominal spectral response to take into account reflectivity of the periscope mirrors or the glow scope walls. This effect is likely to be most important for the blue-sensitive C 7140A photomultiplier. The nominal response of the red-sensitive 6217 photomultiplier, with filters, was taken in this experiment to be proportional to that of the eye. This approximation is valid only if the predominant light source is centered in the visible spectrum. As indicated in the text, the observed response of the blue-sensitive tube seems to limit the error possible from this source.

III. QUALITATIVE RESULTS

Several attempts were made to observe visually the light from the upper end of the glow scope. At the maximum reactor power of 100 kw a faint light could be seen with the tube filled with air at 1 atm pressure, provided the observer had allowed himself adequate ($\sim$30 min) time for dark adaption. The color of this light could not definitely be ascertained, although two of the observers felt that it was blue in color. This expression of color perception cannot be considered definitive because of the well-known inability of the eye to distinguish colors under conditions of minimum light intensity.

The measurements with the optical spectrometer were not successful using either Eastman-type 103F film or the more common process films. Exposures as long as 2 hr were made at a reactor power of 100 kw and 1 atm gas pressure in the glow scope, but no perceptible darkening of the film was apparent. This failure might be reversed if a future attempt were made at a reactor power of 1 Mw using a film of higher sensitivity, and one for which the reciprocity law does not fail badly for exposures of about 10^4 sec. Such a film as Eastman 103-a D would possess these features.

Measurements made with the violet-sensitive photomultiplier tubes were largely successful, and the paragraphs below will deal with the successive experiments performed to determine what radiation is responsible for the glow.

A comparison of the decay of the air glow with time after shutdown to the decay of gamma rays emitted by the reactor and detected with an ionization chamber is made in Fig. 4. For these measurements of the decay of the air glow, the glow scope was held against the face of the reactor and was filled with air at a pressure of 30 cm Hg. The rather close correspondence between these curves, which were normalized on the flat sections corresponding to times before shutdown, suggests that at least the major portion of the nuclear air glow is produced by gamma radiation. The neutron flux decays much more rapidly with time. Corresponding plots for air pressures of 20 and 70 cm Hg showed similar behavior.

In another series of measurements the intensity of the air glow as a function of the water thickness between the reactor face and the lower

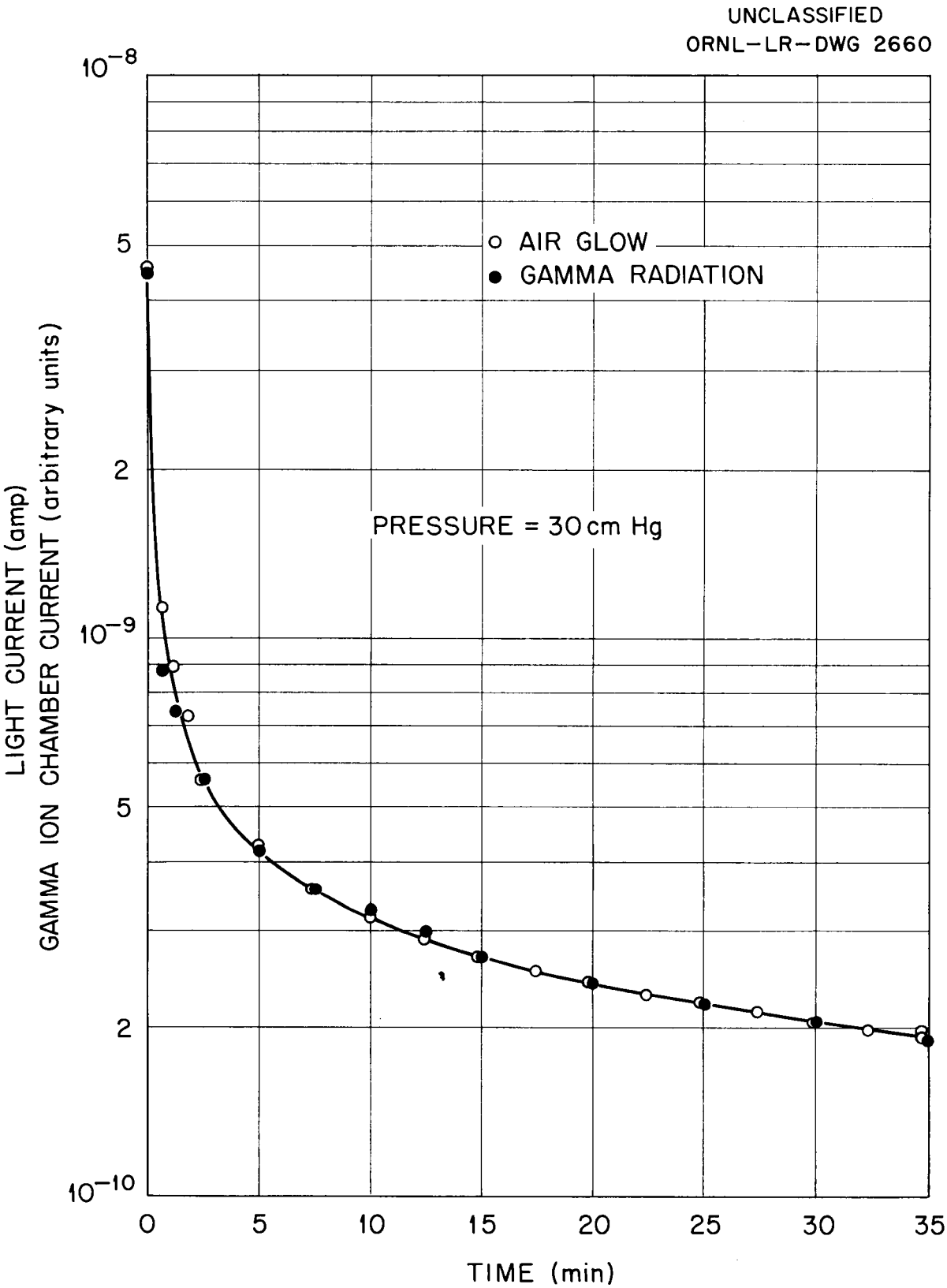

Fig. 4. Decay of Reactor Gamma Rays and Measured Photomultiplier Current as a Function of Time after Reactor Shutdown. The two sets of points have been normalized on the flat portions of the curves prior to the reactor shutdown.

end of the glow scope was determined. The attenuation in the water of the radiation producing the air glow is compared with the known attenuation of gamma rays and neutrons in Fig. 5. The contrast between the glow scope measurements and the fast-neutron data is marked, while the gamma-ray attenuation curve is similar to the glow scope measurements. The problem of "center of detection" for the glow scope was a very severe one, so the exact shapes of the curves would not be expected to be identical.

One series of measurements was made with argon rather than air in the glow scope tube in order to determine any major change in light output which might occur using a noble gas in the tube. As may be seen from Fig. 6, in which the light current is plotted as a function of pressure in the glow scope, the light output with argon in the tube differs little from that with air in the tube. This is to be contrasted with a prediction made by Faulkner,[2] but is in agreement with the work of other authors. Observations were not made with argon at higher pressures because of the bothersome induced radioactivity.

The curve for air in Fig. 6 has experimental points between atmospheric pressure and 10^{-2} cm of Hg. This curve is a compilation of several runs, some made by increasing the pressure in steps and some made by reducing the pressure. For such measurements the readings below a pressure of about 10 cm Hg were reproducible and quickly settled down to a constant and stable value. Above a pressure of about 10 cm Hg, however, the readings drifted for times up to an hour before a constant output current was reached. The points so obtained were not reproducible with the accuracy to be expected from the experimental equipment. Thus the three points at atmospheric pressure in Fig. 6 differ by as much as 10%. In spite of these deviations it is apparent that the pressure curve has a maximum at a pressure of about 20 cm Hg. As is shown on the altitude scale in the upper portion of Fig. 6, this pressure corresponds to an altitude of about 35,000 ft.

In an attempt to determine if the maximum in the pressure vs. light curve originated in some self-absorption process, the glow scope was positioned

UNCLASSIFIED
ORNL-LR-DWG 2661

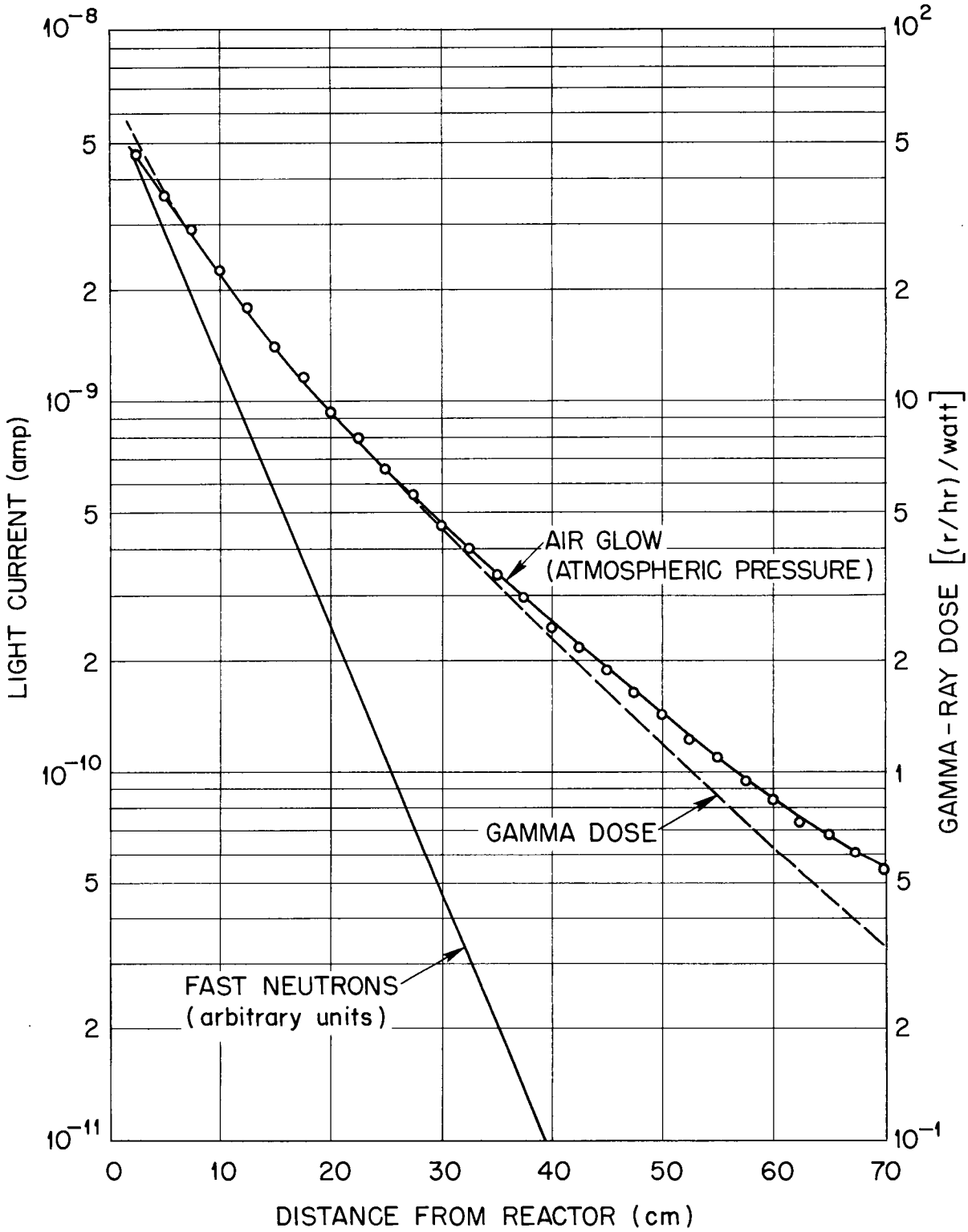

Fig. 5. Attenuation in Water of the Radiation Producing the Air Glow, Compared to Measured Fast-Neutron and Gamma-Ray Dose Rates Measured in the Absence of the Glow Scope Tube. The gamma-ray dose rate, shown in absolute units, is used in the calculations contained in the appendix.

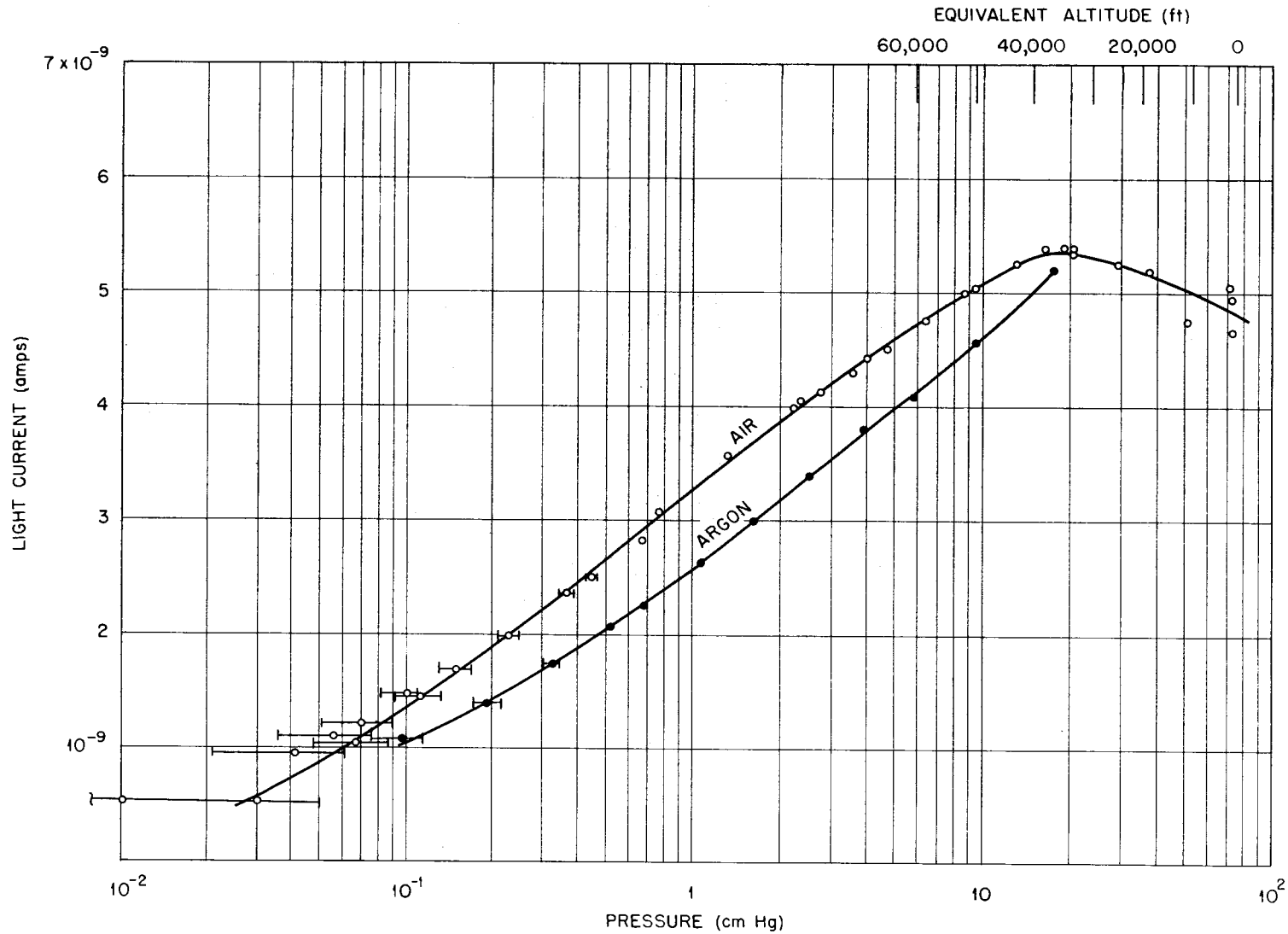

Fig. 6. Variation with Gas Pressure of the Observed Photomultiplier Current. Curves are shown both for air and for argon. The error in the light output observed at air pressures of greater than 30 cm is indicated by the spread between the data points.

against a constant light source and the glow intensity was measured as a function of the air pressure in the glow scope. This light source, which was presumed to be similar in nature to the nuclear air glow, was made by causing a discharge in an air-filled proportional counter with a transparent mica window. No apparent variation in glow intensity with pressure was observed.

The results obtained using the C7140-A photomultiplier tube may be summarized by a statement that the reactor gamma rays do induce a glow in the air, the glow for a given air pressure being reasonably proportional to the gamma-ray dose.

It should be noted that no satisfactory explanation has been given here for two experimental observations of possible importance. One is the shape of the relationship between light output and gas pressure. This is not a linear relationship even though the energy absorbed from fast electrons must be nearly proportional to the density of gas atoms. The other anomaly is the mentioned long-term drift of the light output. These two anomalies may originate in some spurious characteristic of the experimental apparatus, but many attempts to find such a difficulty failed. It therefore appears that these anomalies should not be ignored, since they comprise the largest single unknown factor in the absolute measurement of luminosity described in the following section. The emission of visible light from an ionized gas is a complicated phenomenon. If, for instance, a study of this phenomenon should show a marked temperature dependence of the relative probability for the emission of visible light, two implications would be apparent: (1) there may be an explanation of the above-mentioned anomalies, and (2) there may be a large error in the estimate given in Section VI for light output of an operating nuclear-powered airplane.

IV. QUANTITATIVE RESULTS

The method used to make an absolute determination of the luminosity of the air in the glow scope was discussed in Section II. This section deals with the interpretation of these "eye sensitivity" measurements. The interpretation of this result is hampered by the fact that this reading was near the limit of sensitivity of the detector and close to the observed background measurement. This, along with uncertainties in the experimental data for various air pressures, forces an estimate of error of about 50% for the result.

The lamp used for calibration was rated at a candlepower of 0.024 $\pm$ 25%, which corresponds to a luminosity of 0.3 lumens, that is, 0.024 x 4π. For 1 atm of air in the glow scope, the calibrated luminosity per watt of reactor power is then

$$\frac{(i_r/i_\ell)\ 0.3}{P} = I$$

where

i_r = detector current reading with the reactor as the light source
= 11×10^{-11} amp, $\pm$50%,

i_ℓ = detector current reading with the calibration lamp as the light source
= 46×10^{-8} amp,

P = reactor operating power
= 10^5 watts,

I = measured specific luminosity
= 7×10^{-10} lumen/watt $\pm$ 50%.

This result suffers both from the lack of knowledge of the actual difference in sensitivity between the human eye and phototube detector and from the lack of knowledge of the spectrum of light studied. The detector sensitivity curve may be very erratic compared to the eye in the "tail" of its peak, in which case a large error might be made if the air glow light spectrum is heavily weighted in the blue. A upper bound may be placed

on possible error from this source by using data obtained with the violet sensitive phototube shown in Fig. 6. The calculation in this case is like the one above except that a correction was entered which compensates for the difference in red sensitivity of the two detectors. This correction artifically made the quantity $\int_\lambda E_\lambda f_\lambda d\lambda$ the same for the two detectors, where E_λ is the relative spectral sensitivity curve for either tube, normalized to a maximum sensitivity of 1.0, and f_λ is the "black body" emission spectrum at 2,000°K. (2,000°K was taken as the color temperature of the tungsten calibration lamp.) The violet sensitive tube would yield an output value of 1.7×10^{-9} lumen/watt if it were assumed to measure luminosity after this correction has been entered. If the spectrum at the detector is indeed weighted in the blue, then the violet detector puts a limit on the error which might result from the difference between the two phototube detectors.

For the purposes of this report, however, the measured luminosity, I, of 7×10^{-10} lumen/watt will be used. This number may be interpreted only in terms of the rate of dissipation of radiation energy in the glow scope tube. A measure of this quantity is

$$\Delta = \int_V D(z)\, dV$$

where

Δ = integrated gamma-ray dose rate over the volume of the glow scope tube ($r \cdot cm^3/hr \cdot watt$),

$D(z)$ = gamma-ray dose rate at a point z in the tube (r/hr),

z = perpendicular distance from the reactor face along the first leg of the glow scope (cm),

V = volume of the glow scope (cm^3).

A calculation of Δ is presented in the appendix, yielding a value of

$$8.6 \times 10^4\ (r \cdot cm^3)/(hr \cdot watt)$$

Dividing the measured luminosity by the integrated gamma-ray dose rate gives the light output L from a reactor-induced air glow as follows:

$$L = \frac{I}{\Delta} = 8.4 \times 10^{-15} \text{ (lumen /cm}^3\text{)/(r/hr)}$$

When manifest experimental uncertainties are included this becomes

$$L = (8 \pm 4) \times 10^{-15} \text{ (lumen /cm}^3\text{)/(r/hr)}$$

Large errors are ignored which might be associated either with the spectral sensitivity of the detector or the assumed invariance of L with the temperature of the air.

V. COMPARISON OF RESULTS WITH RESULTS OF OTHER INVESTIGATIONS

To properly evaluate the results of this experiment they must be compared to the earlier theoretical estimates by Welton[4] and Faulkner,[3] which were expressed in terms of the ratio of the number of watts of visible light to the number of watts dissipated by ionization in the same volume.

This criterion is difficult to apply to the experiment because of ambiguities associated with the spectral sensitivities -- the same ambiguities which led historically to the definition of light intensity in terms of the lumen. Therefore, the estimates of Welton and Faulkner were translated into the units of L. In this revision the assumptions of the authors were held intact in the manner described below. Welton's estimate, based on a light spectrum uniform with photon energy, was revised by integrating such a spectrum over the standard eye sensitivity curve. Using this method,

$$L_W^{\bullet} = 2.5 \times 10^{-11} \text{ (lumen/cm}^3\text{)/(r/hr)}$$

Faulkner's estimate was altered slightly by using more complete data[11] on the time rate of dark adaption. This gives:

$$L_F = 6 \times 10^{-17} \text{ (lumen/cm}^3\text{)/(r/hr)}$$

The work of Grün and Schopper[8] may also be used to obtain a value of L, provided an assumption is made about the exact spectrum of air glow light. If all the 1000 photons/particle were given off at the indicated 4000 Å and the standard eye sensitivity curve consulted, then

$$L_{GS_1} = 3 \times 10^{-16} \text{ (lumen/cm}^3\text{)/(r/hr)}$$

However, this value changes a factor of 10 in either direction if the light is assumed to differ from 4000 Å by only 200 Å. Furthermore, if the Purkinje effect is taken into account, and therefore the eye sensitivity curve for a field of 10^{-5} millilamberts used, the value changes to

$$L_{GS_2} = 2 \times 10^{-14} \text{ (lumen/cm}^3\text{)(r/hr)}$$

---

11. W. E. Forsythe, Smithsonian Physical Tables, p. 89, Lord Baltimore Press, 9th ed. revised.

Thus a fixed value cannot be determined, but logarithmically speaking these values of L_{GS} tend to confirm the results of the presently reported experimental investigation. A similar value cannot be obtained from the work of Wood,[9] because no hint of spectral distribution is given.

A summary of the results of the various investigations is given in Table 1. Since the various estimates differ by several orders of magnitude, the large error estimated in this experiment does not greatly diminish its value.

Table 1. Comparison of Predictions of Reactor-Induced Air Glow

Investigators	L (lumens/cm^3)/(r/hr)	Reference
Welton	2.5×10^{-11}	4
Faulkner	6×10^{-17}	3
Grün and Schopper	3×10^{-16} [a]	8
	2×10^{-14} [b]	
This experiment	$(8 \pm 4) \times 10^{-15}$	

a. Assuming all photons were given off at 4000 Å and the standard sensitivity curve is consulted. This value changes a factor of 10 in either direction if the particle is given off at 4000 ± 200 Å.

b. Value when the Purkinje effect is considered and assuming all photons are assumed to be given off at 4000 Å.

VI. ESTIMATED AIR GLOW AROUND A NUCLEAR-POWERED AIRCRAFT

The results of the experiment were used to estimate the luminosity around a nuclear-powered aircraft reactor shield similar to an ORNL-Pratt and Whitney design. This shield would have an outer shield diameter of 8 ft and a tapered shadow shield for angles $\angle$ 50 deg from the reactor-crew box axis. The relaxation length of gamma radiation (geometry removed) through the shield would be 1 ft, with a gamma-ray dose rate at a distance of 50 ft from reactor of 10^3 r/hr. Integrating over space gives a dose rate of

$$\int_{\text{space}} D\, dV \cong 6 \times 10^{14}\ (\text{r}\cdot\text{cm}^3)/\text{hr}$$

Since in the experiment discussed in the previous sections it was stated that air will give off 8.4×10^{-15}(lumen/cm^3)/(r/hr), the light output from the reactor of the airplane would be about 5 lumens.

It should be noted that the intensity is largely a function of the allowable dose at a distance from the sides and rear of the reactor shield. That is, if 10^4 r/hr were allowed at 50 ft the light output would be (50 $\pm$ 30) lumens. If the observer were so far from the aircraft that the light appeared as a point source, the 5-lumen light output would correspond roughly to that from a 1-watt tungsten bulb. It may also be compared to the standard aircraft running-light of 24 candlepower, which has an output of 300 lumens.

Appendix

ESTIMATE OF INTEGRATED GAMMA-RAY DOSE RATE IN THE GLOW SCOPE TUBE

An estimate of the integral of the gamma-ray dose rate over the volume of the first leg of the glow scope tube is made here for the case where the reactor and the lower end of the glow scope are immediately adjacent to each other. An estimate within 20% should be considered more than adequate. Since most of the fast electrons which cause ionization in the air of the glow scope are given off from its aluminum walls when a gamma ray interacts there, either entering or leaving the glow scope, the estimate is based on the dose rate at the inside surface of the aluminum wall of the tube.* If A is the cross-sectional area of the glow-scope tube, z the perpendicular distance from the reactor face, V the volume of the first leg of the glow scope, and D(z) the dose rate within the tube at a distance z from the reactor at a nominal power of 1 watt, then the integrated dose rate over the volume is

$$\Delta = A \int_V D(z)\, dz$$

Note that this integral represents, except for conversion factors, the fraction of the power of the reactor dissipated by gamma radiation inside the glow scope.

The value of D(z) within the glow scope can be estimated in terms of the gamma-ray dose rate, $\overline{D}(z)$, that has been measured in water at the same distance from the reactor face. $\Gamma(z)$ is defined to be the gamma-ray flux corresponding to D(z), and $\overline{\Gamma}(z)$ similarly corresponds to the measured $\overline{D}(z)$. It is possible to make a reasonable calculation of D(z) by considering $\Gamma(z)$ to be composed of two components, $\Gamma^-(z)$ and $\Gamma^+(z)$, defined as follows (see Fig. 7):

---

*It is assumed that air and aluminum are sufficiently similar that the Bragg-Gray principle holds.

UNCLASSIFIED
ORNL-LR-DWG 25096

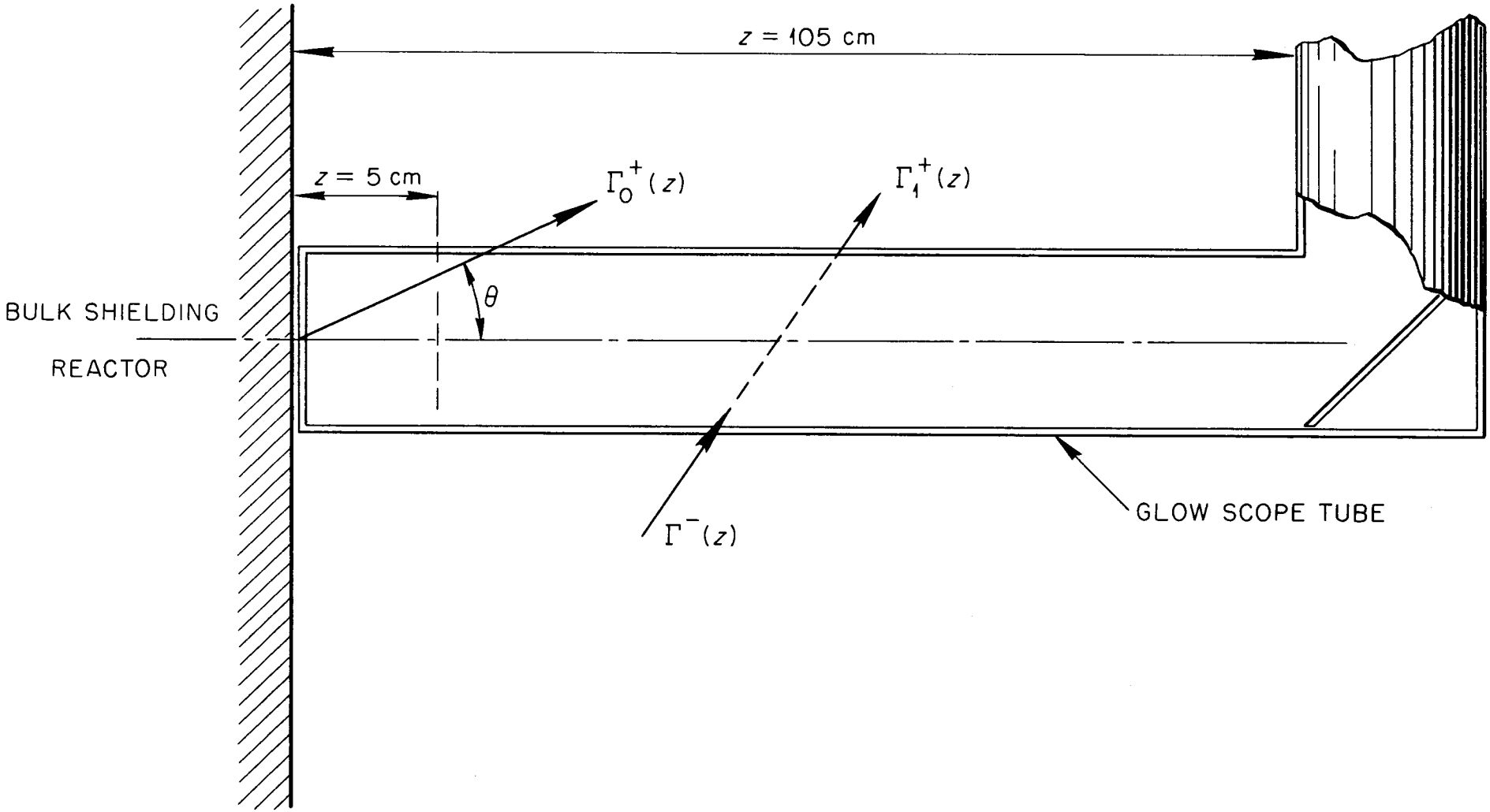

Fig. 7. Geometry Used to Estimate $D(z)$ within the Glow Scope Tube.

1. $\Gamma^-(z)$ is the flux which enters the glow scope through the wall at a distance z from the reactor face. This flux component is taken to be unchanged by the presence of the air void, an assumption which seems justified in view of the low probability for any component of $\Gamma^-(z)$ to have previously traversed the air void before the scattering which made it a part of $\Gamma^-(z)$. Since the axis of the tube is approximately coincident with the reactor axis, and since the photon directions are distributed with cylindrical symmetry about this axis, it is assumed that $\Gamma^-(z) \cong 1/2\ \bar{\Gamma}(z)$.
2. $\Gamma^+(z)$ is the flux which leaves the glow scope through the wall at a distance z from the reactor. This term is calculated differently for small and large distances:
   a. For $0 < z < 5$ cm, that is, for z distances less than one radius of the tube, $\Gamma^+(z)$ is considered to be equal to $1/2\ \bar{\Gamma}(0)$, where $\bar{\Gamma}(0)$ is the measured flux at the reactor face with no glow scope present. This approximation should be reasonably valid, and it makes the calculation of $\Gamma^+(z)$ much simpler.
   b. For $5\ \text{cm} < z < 105$ cm, $\Gamma^+(z)$ is considered to consist of two subcomponents: $\Gamma^+_0(z)$, which is the flux leaving the tube at a distance z that had originally entered the tube through the end of the glow scope adjacent to the reactor; and $\Gamma^+_1(z)$, which is the flux leaving the tube at distance z that had originally entered the tube through the side wall at some distance less than z, designated as distance z'.

As explained above, values of $\Gamma^-(z)$ are easily obtained from the experimental measurements in water. The integral of $D^-(z)$ is then determined by direct integration of the experimental data with the following numerical result:

$$A \int_{z=0}^{105\ \text{cm}} D^-(z)\, dz = 380A\ (\text{r}\cdot\text{cm}^3)/(\text{hr}\cdot\text{watt}) \qquad (1)$$

Similarly, the integral of $D^+(z < 5\ \text{cm})$ is obtained directly from the experimental data with the following numerical result:

$$A \int_{z=0}^{5\ \text{cm}} D^+(z)\, dz = 200A\ (\text{r}\cdot\text{cm}^3)/(\text{hr}\cdot\text{watt}) \qquad (2a)$$

The calculation of $\Gamma_o^+(z)$ is made by representing the reactor by a surface source of strength S $\cos\theta$ (photons/steradian$\cdot$cm$^2\cdot$sec). It is further assumed for calculational purposes that the source from the area A responsible for $\Gamma_o^+(z)$ is all concentrated at a point on the axis of the tube. The resulting integral for $D_o^+(z)$ gives

$$A \int_{z=5}^{105\ \text{cm}} D_o^+(z) = 150A\ (\text{r}\cdot\text{cm}^3)/(\text{hr}\cdot\text{watt}) \qquad (2b.1)$$

The calculation of $\Gamma_1^+(z)$ is the most complicated. It depends upon an integration over the area of the tube of all radiation entering the volume of the tube at a distance z' and at such an angle that it will leave the tube a distance z from the reactor face. Several assumptions were required before the numerical integration could be performed.

1. The angular distribution of the flux entering the glow scope at any distance z' was taken to be proportional to the cosine of the angle between the gamma-ray path and the axis of the glow tube, that is, $\Gamma^-(z',\theta) \propto \cos\theta$.
2. It was assumed in the integration over z' that the gamma-ray dose rate from the reactor could be represented by a fixed relaxation length for the entire length of the glow scope. This would be a very bad assumption except that most of the dose rate $D^+(z)$ arises from the flux entering the tube rather close to z, and

the fixed relaxation length was taken from the experimental data at this point in each case. The experimental relaxation length was used once this integration was completed in order to determine the integral of $D_1^+(z)$ over all values of z.

$$A \int_{z=5\ \mathrm{cm}}^{105\ \mathrm{cm}} D_1^+(z)\, dz = 200A\ (\mathrm{r \cdot cm^3})/(\mathrm{hr \cdot watt}) \qquad (2b.2)$$

Combining Eqs. (1) and (2) gives the following total dose rate:

$$\Delta = A \int_{z=0}^{105\ \mathrm{cm}} D(z)\, dz = 930A = \sim 8.6 \times 10^4\ (\mathrm{r \cdot cm^3})/(\mathrm{hr \cdot watt}).$$

It is interesting to note that if the presence of the air void had been completely ignored the result would have been

$$\Delta = 7 \times 10^4\ (\mathrm{r \cdot cm^3})/(\mathrm{hr \cdot watt}),$$

which does not differ widely from the more correct calculation.

It is felt that the over-all error in light production quoted in Section VI is not seriously affected by errors in the above estimate.