UNCLASSIFIED

CENTRAL RESEARCH LIBRARY
DOCUMENT COLLECTION Cy. 4

MARTIN MARIETTA ENERGY SYSTEMS LIBRARIES
3 4456 0361197 3

ORNL-2409
Chemistry-Separation Processes
for Plutonium and Uranium

OXIDATION OF URANIUM TETRAFLUORIDE IN A MOVING-BED REACTOR

H. W. Franz
R. H. Toye

CENTRAL RESEARCH LIBRARY
DOCUMENT COLLECTION
LIBRARY LOAN COPY
DO NOT TRANSFER TO ANOTHER PERSON
If you wish someone else to see this document, send in name with document and the library will arrange a loan.

OAK RIDGE NATIONAL LABORATORY
OPERATED BY
UNION CARBIDE NUCLEAR COMPANY
Division of Union Carbide Corporation
UCC
POST OFFICE BOX X · OAK RIDGE, TENNESSEE

UNCLASSIFIED

Printed in USA. Price $1.00 cents. Available from the

Office of Technical Services
U. S. Department of Commerce
Washington 25, D. C.

LEGAL NOTICE

This report was prepared as an account of Government sponsored work. Neither the United States, nor the Commission, nor any person acting on behalf of the Commission:

A. Makes any warranty or representation, express or implied, with respect to the accuracy, completeness, or usefulness of the information contained in this report, or that the use of any information, apparatus, method, or process disclosed in this report may not infringe privately owned rights; or

B. Assumes any liabilities with respect to the use of, or for damages resulting from the use of any information, apparatus, method, or process disclosed in this report.

As used in the above, "person acting on behalf of the Commission" includes any employee or contractor of the Commission to the extent that such employee or contractor prepares, handles or distributes, or provides access to, any information pursuant to his employment or contract with the Commission.

Report Number: ORNL-2409

Contract No. W-7405, eng 26

CHEMICAL TECHNOLOGY DIVISION

OXIDATION OF URANIUM TETRAFLUORIDE IN A MOVING-BED REACTOR

H. W. Franz, Kennecott Copper Corporation

R. H. Toye, Koppers Company, Incorporated

DATE ISSUED:

DEC 27 1957

OAK RIDGE NATIONAL LABORATORY
Operated by

UNION CARBIDE NUCLEAR COMPANY
A Division of
UNION CARBIDE AND CARBON CORPORATION
Post Office Box X
Oak Ridge, Tennessee

3 4456 0361197 3

INTERNAL DISTRIBUTION

1. C. E. Center
2. Biology Library
3. Health Physics Library
4-5. Central Research Library
6. Reactor Experimental Engineering Library
7-26. Laboratory Records Department
27. Laboratory Records, ORNL R.C.
28. A. M. Weinberg
29. L. B. Emlet (K-25)
30. J. P. Murray (Y-12)
31. J. A. Swartout
32. E. H. Taylor
33. E. D. Shipley
34-35. F. L. Culler
36. M. L. Nelson
37. W. H. Jordan
38. C. P. Keim
39. J. H. Frye, Jr.
40. S. C. Lind
41. A. H. Snell
42. A. Hollaender
43. K. Z. Morgan
44. M. T. Kelley
45. T. A. Lincoln
46. R. S. Livingston
47. A. S. Householder
48. C. S. Harrill
49. C. E. Winters
50. D. W. Cardwell
51. D. Phillips
52. W. K. Eister
53. F. R. Bruce
54. D. E. Ferguson
55. R. B. Lindauer
56. H. E. Goeller
57. R. A. Charpie
58. J. A. Lane
59. M. J. Skinner
60. R. E. Blanco
61. G. E. Boyd
62. W. E. Unger
63. R. R. Dickison
64. A. T. Gresky
65. E. D. Arnold
66. C. E. Guthrie
67. J. W. Ullmann
68. K. B. Brown
69. K. O. Johnsson
70. H. M. McLeod
71. C. W. Hancher
72. J. C. Bresee
73. J. B. Adams
74. L. M. Ferris
75. C. D. Scott
76. M. E. Whatley
77. W. W. Weinrich (consultant)
78. M. D. Peterson (consultant)
79. D. L. Katz (consultant)
80. G. T. Seaborg (consultant)
81. M. Benedict (consultant)
82. C. E. Larson (consultant)
83. L. Squires (consultant)
84. J. H. Rushton (consultant)
85. ORNL - Y-12 Technical Library, Document Reference Section

EXTERNAL DISTRIBUTION

86. R. F. Bacher, California Institute of Technology
87. Division of Research and Development, AEC, ORO
88-89. Frank Chambers, Kennecott Copper Corporation
90-91. E. B. Gunyon, Koppers Company, Inc.
92. J. E. Moore, Koppers Company, Inc.
93. H. W. Franz, Kennecott Copper Corporation
94. R. H. Toye, Koppers Company, Inc.
95-591. Given distribution as shown in TID-4500 (13th ed. Rev.) under Chemistry-Separation Processes for Plutonium and Uranium category (75 copies - OTS)

CONTENTS

		Page
0.0	ABSTRACT	1
1.0	SUMMARY	1
2.0	INTRODUCTION	2
3.0	MOVING-BED REACTOR RUNS-UF_4 OXIDATION	2
3.1	Heat Addition by Combustion of Carbon	3
3.1.1	Details of Operation	4
3.1.2	Experimental Results	4
3.2	Heat Addition by Oxidation of Carbon Monoxide	7
3.2.1	Details of Operation	7
3.2.2	Experimental Results	8
4.0	APPENDIX	13
4.1	Equipment Details	13
4.2	Discussion of Chemical Reactions	24

0.0 ABSTRACT*

A short study was made of the oxidation of UF_4 to UF_6 with three runs in a 4-in. dia moving-bed reactor. Combustion of controlled additions of powdered carbon or carbon monoxide was used to obtain reaction temperatures. Qualitative data indicate that UF_6 was produced during all runs. Additional experimental work will be necessary before a large-scale pilot plant can be designed and operated.

1.0 SUMMARY

Three uranium tetrafluoride oxidation runs, of 3.5, 5, and 20-hr duration, were completed. Physical operation of the reactor was reasonably satisfactory throughout each run up to the point of shutdown. Fusion, resulting in overheating, was a major cause of shutdown in each run.

Analysis of the solid residue showed some oxidation of U (IV) to U(VI) in each run, which was as high as 90%, in a portion of one run. The presence of UF_6 in the off-gas was confirmed, but actual evolution and recovery were far less than were indicated by the extent of oxidation of the solid residues. Considerable reaction of uranium hexafluoride with impurities (uranium oxides) in the feed and with parts of the equipment occurred, reducing the net yield.

Combustion of carbon monoxide was much more satisfactory than combustion of carbon dust in supplying additional heat to the reactor. Segregation and high local concentration of carbon dust caused excessive localized temperatures in the 3.5 and 5-hr runs, and resulting in fusion and stoppage of pellet flow. Carbon monoxide was used successfully in the 20-hr run. With adequate controls, continuous operation with carbon monoxide is believed possible.

The reactor system was never brought to steady-state conditions, and data are not considered suitable as a basis for scale-up and operation of a large-scale unit. However, valuable information on the operation of the present reactor system was obtained. Recommendations for future operation of the 4-in. dia moving-bed unit are:

1. Allow long holdup of UF_4 pellets in the hottest reaction zone.
2. Maintain the highest operable temperatures by maximum preheating of pellets and oxygen and by combustion of carbon monoxide in the reaction zone.
3. Supply an ample excess of oxygen to the reaction zone.
4. Supply a pure (oxide-free) UF_4 feed.

---

* Report of work performed by employees of the Kennecott Copper and Koppers Companies, Incorporated, under subcontract with Union Carbide Nuclear Company at Oak Ridge National Laboratory.

2.0 INTRODUCTION

This program was based on the AEC invitation of Nov. 3, 1955, for private industry to participate in the feed materials program. The Kennecott Copper Company and the Koppers Company, Inc., submitted a joint proposal to the AEC on Oct. 1, 1956, for the conversion of uranium concentrates to highly purified uranium compounds. One of the several processing methods considered was the Fluorox process, in which UF_4 is oxidized to UF_6 by dry air or oxygen. The costly and hazardous fluorination with elemental fluorine usually used is thus eliminated.

The basic chemistry of the oxidation reaction has been studied by various groups,(1) and its adaptation to commercial large-scale operations has been seriously considered. A limited pilot-plant-scale study in a moving-bed reactor had been carried out at Oak Ridge National Laboratory.(1) A program was initiated to obtain pilot-plant data for the oxidation reaction in a moving-bed reactor, the data to be used to supplement some of the design and operating assumptions in the Kennecott-Koppers proposal. The decision to perform these pilot scale tests at ORNL was based on the fact that moving-bed reactor equipment and pelletized UF_4 feed material were already available. However, the pelletized UF_4 available contained considerable amounts of uranium oxides and uranyl fluoride which caused serious difficulties, and data suitable for scale-up were not obtained before the project was terminated Dec. 4, 1956.

Acknowledgement - J. E. Moore of the Koppers Company made frequent supervisory visits to Oak Ridge, and in some instances, assisted in the experimental work. J. C. Bresee and J. B. Adams of the Unit Operations Section of the Oak Ridge National Laboratory Chemical Technology Division were most cooperative, and the maintenance and instrument personnel proved helpful in expediting the various reactor and cell revisions. Recognition should also be given to the technical assistants assigned to this work.

3.0 MOVING BED REACTOR RUNS-UF_4 OXIDATION

Three uranium tetrafluoride oxidation runs were completed. Combustion of carbon dust for internal heat generation was used in two runs and combustion of carbon monoxide was used in a third run. Controlled oxidation conditions were attained over periods of 3.5 hr and 5 hr powdered carbon. A 20 hr run was made with carbon monoxide. All three runs were shut down by mechanical trouble involving overheating and partial fusion of pellets in the moving bed. Powdered carbon segregated badly causing excessive local temperatures and rapid shutdown. Good temperature control was maintained for an extended period with carbon monoxide.

The available pelleted UF_4 feed was of poor quality, containing large amounts of uranium oxides and uranyl fluoride. The presence of UF_6 in the reactor off-gas was confirmed by visual observation of its reaction with

(1) J. E. Moore. "Fluorox Moving-Bed Process for Producing UO_3, UF_4, and UF_6: Bibliography, " ORNL-2117 (Aug. 6, 1956).

moist air, by a chemical indicator test, and by inference from the changes in analysis of feed samples and the solid residues. Chemical analysis showed that measurable oxidation of U (IV) to U (VI) occurred in each run.

3.1 Heat Addition by Combustion of Carbon

Combustion of carbon powder with oxygen was used for internal heat generation in runs 1 and 2. Run 1 was terminated 3.5 hr after startup, and data obtained were negligible. In run 2 operation was maintained under control for 5 hr. In particular, reactor pressure was maintained low by applying a vacuum to the off-gas system. Both runs were terminated by pellet fusion resulting from high local concentrations of carbon. The runs were carried out in a 4-in. dia moving-bed reactor (Appendix, Figs. 1 and 2) under the operating conditions shown in Table 1.

Table 1. Operating Conditions in Runs 1 and 2

Pellet feed rate: 20 lb/hr

Run No.	Carbon in Feed (%)	Temperature (°C)			Reactor Pressure (in.Hg)	Flow Rate (ft^3/hr, STP)[c]		Operating Time during Oxidation (hr)
		Preheat Points 1 and 2	Bed					
			Point 4	Point 5A		N_2	O_2	
1	0.45	675-700	650-825	620-720	4.1-9.5	~6	18-24	~3.5
2	0.44-0.55[a]	560[b]	~600[b]	600-815	0.1-1.3	~6	24	~5

[a] Four different feeds used

[b] After the first hour

[c] Nitrogen flow rate at top and bottom; oxygen flow rate during oxidation

3.1.1 Details of Operation

In run 1, excessive reactor pressures were caused by restrictions in the off-gas system. Shutdown was caused by a combination of a jammed motor drive on the rotary discharge valve plus flow stoppage by overheating and pellet fusion in the bed. Because of the high reactor pressure, gas feed rates were reduced momentarily each time the product was discharged into plastic bags. Continuous downward flow of oxygen could not be maintained, as evidenced by a higher temperature above the oxygen inlet than below it.

In run 2, operation was more successful. Difficulty with excessive pressure was reduced by removing an obstruction in the cold-trap line, but carbon dust continued to separate and cause local hot spots. Bed temperatures fluctuated about the same as in run 1. Downward flow of oxygen was maintained as evidenced by a higher temperature below the oxygen feed point than above it. Fusion finally occurred, however. Bed movement became erratic after 5-hr and the run was terminated.

3.1.2 Experimental Results

A weight balance of materials fed and removed from the reactor (Table 2) indicated total losses of 7.5 lb of material in run 1, and 4.5 lb in run 2, which represents both physical losses and product removal. It was virtually impossible to relate any particular feed sample with any given product sample. The reactor had a relatively large holdup compared to the rate of throughput and to the total throughput during the short runs. Steady state was maintained with respect to flow rates of solids and gases. Results of chemical analysis of product samples (Table 3) varied continually. As a result, attempts at quantitative interpretation were unsuccessful.

Calculations based on feed and product analyses indicated that feed and product pellets were of different composition. No definite relation between the weights of feed and product could be established in either run. However, by assuming that all the hexavalent uranium was present as UO_2F_2, the ammonium oxalate insoluble (AOI) present as UO_2, and the tetravalent uranium as UF_4, the composition of samples was estimated (Table 4). The results indicated considerable oxidation of U (IV) to U (VI) in both runs. That the change in weight was small in spite of considerable oxidation of U (IV) can be accounted for by assuming that the bulk of the UF_6 that formed recombined rapidly with the UO_2 (or U_3O_8) present, thus not resulting in a weight loss. The low AOI values in the products from run 2 support this theory. In run 1, the AOI decreased slightly.

Several unsuccessful attempts were made to collect a sample of the UF_6 that may have been evolved. A spot test made during run 1, however, showed the presence of UF_6. During both runs the bed temperatures of the reaction zone were seldom under control, as evidenced by erratic fluctuations at thermocouples 4 and 5A. This is attributed mainly to uneven distribution

Table 2. Weight Balances for Runs 1 and 2

Run No.	Wt. (lb)	
	Feed[a]	Product
1	104.5	98.0
	28.5	36.0
	132.0	38.5
	-	85.0[b]
	265.0	257.5
2 A	98.0	94.5
B	25.0	23.0
C	7.5	-
	21.0	-
	12.5	50.0
D	74.0	65.5[b]
	238.0	233.5

[a] In run 1, feed was material from batches designated F-1, F-2, F-3; in run 2, feed in part A was PR-1 through PR-5; in part B was PR-6 through PR-9; in part C was F-1 (PR-10 + 0.44% C), F-2 (P-1 + 0.45% C), F-3 (P-2 + 0.44% C), and in Part D was F-4 (reactor residue from F-3 + 0.1% C, to bring total C to 0.55%).

[b] Residue from reactor

Table 3. Chemical Analysis of Feed and Product Samples in Runs 1 and 2

Run No.	Material	Wt (lb)	Amount (%)					
			Total U	U(IV)	U(VI)[b]	AOI[c]	F	C
1	Feed	NA[a]	76.24[d]	55.00[d]	21.24[d]	5.70[d]	18.0[d]	0.45[d]
	Product	23.5	75.50	34.11	41.39	5.33	16.8	NA[a]
2	Feed 1	7.5	76.56	25.48	51.08	4.46	16.0	0.44
	2	21.0	75.50	34.11	41.39	5.33	16.8[e]	0.45
	3	12.5	75.78	41.39	34.39	7.66	17.9	0.44
	4	NA	76.24	55.00	21.24	5.70	18.0	0.55
	Avg.		75.64	37.75	37.89	6.50	17.4	
	Product 1	8.5	76.64	27.81	48.83	4.50	16.4	NA[a]
	2	7.0	76.56	20.98	55.58	3.26	16.5	NA
	3	6.5	76.24	28.31	47.93	1.85	17.7	NA
	4	9.0	75.98	30.64	45.35	2.06	16.7	NA
	5	10.0	76.60	29.46	47.14	2.29	16.6	NA
	6	8.5	76.46	29.45	47.01	2.24	16.4	NA
	7	1.0	76.24	33.59	42.65	2.44	16.7	NA
	Avg.		76.32	29.46	46.86	2.00	16.8	

a NA = not available
b By difference
c Ammonium oxalate insoluble (assumed to be UO_2 or U_3O_8)
d Average value
e Calculated value

of the carbon dust throughout most of the run.

Table 4. Estimated Composition of Feed and Product Samples in Runs 1 and 2

Run No.	Sample	Amount (%)				
		UF_4	UO_2F_2	UO_2	F (anal.)	F (calc.)
1	Feed (3)	65.9	27.5	5.7	18.0	19.3
	Product (1)	38.5	53.6	5.3	16.8	16.0
2	Feed (2 and 3)	42.1	49.0	6.5	17.4	16.3
	Product (3, 4, 5, and 6)	36.4	60.6	2.1	16.8	16.3

3.2 Heat Addition by Oxidation of Carbon Monoxide

Combustion of carbon monoxide gas with oxygen was used for internal heat generation in run 3.

Temperature control was satisfactory, allowing a run of 20 hr duration. Conversion of U (IV) to U (VI) was high with a low-quality feed and low with a high-quality feed. The presence of UF_6 in the off-gas was qualitatively confirmed.

3.2.1 Details of Operation

Run 3 lasted 26.5 hr (Table 5). Oxygen was fed to the reactor for a total time of 20 hr. During operation, vacuum was applied to the chemical trap outlet of the off-gas system to lower the reactor pressure. The vibrator was actuated on a 20-sec cycle. For the first 1.5 hr, the run proceeded smoothly with a slight buildup of reactor pressure. Removal of dry ice from around the cold trap inlet valve relieved this buildup. The run was continued for another 19 hr, and the reactor was then shut down because of erratic bed movement. When the reactor was opened, some fused particles were found in the contents. During the actual oxidation, the bed temperatures were essentially constant and changed only slightly when new feed cans were installed or when slight changes were made in either the oxygen or carbon monoxide gas flow rate. Run 3 was a definite improvement over the previous two runs, and except for some trouble in the off-gas system, no operating difficulties were experienced until partial fusion occurred in the final hour.

Table 5. Operating Conditions in Run 3

Pellet flow rate: 15 lb/hr

Run No.	Preheat Points 1 and 2	Temperature (°C)			Flow Rate[a] (ft^3/hr, STP)			Operating Time during Oxidation (hr)
		Point 4	Point 5A	Reactor Pressure (in. Hg)	N_2	O_2	CO	
3	750	700-850	650-725	0.1-1.3	6	24-30	1.2-4.8	20

[a] Nitrogen flow rate at top and bottom; oxygen and carbon monoxide flow rate during oxidation

3.2.2 Experimental Results

A weight balance for run 3 (Table 6) showed a net weight loss of 6.5 lb. Product samples could be matched with the two feed samples used because of the wide difference in original composition. (Table 7) Good conversion of the poor-quality feed 1 is shown by the decrease in the U (IV) content of the reaction mixture from 32 to 5%. Conversion of the high-quality feed 4 (Table 8) was much poorer, decreasing somewhat as the run progressed. Steady state was approached not only with respect to flow rates of solids and gases and temperature profiles but to some extent for chemical reaction rates. The composition of the product stream changed only slowly with time.

Efforts to explain the difference in reactivity between the two feeds were made. Different colored pellets were separated by hand from several materials and analyzed separately for AOI and F contents (Table 9). The black pellets in the feed samples were high in oxide, while the yellow pellets were mainly uranyl fluoride with some oxides. Black pellets from the product sample contain far less oxides and had a higher fluoride content, giving evidence of the reaction of uranium hexafluoride with uranium oxides. This type of analysis provides limited information, however, concerning the process and for evaluation of experimental results.

Table 6. Weight Balance for Run 3

Run No.	Weight (lb)	
	Feed	Product
3	52.0	52.0
	47.0	63.5
	115.5	89.5
	117.0	120.0
	331.5	325.0

The following discussion may, however, provide a reasonable basis for explanation of differences in conversion between the two feed samples (Table 7). Feed 1 was a poor-quality material, low in UF_4 content and high in uranium oxides and uranyl fluoride. The first 12 product samples represented partially converted samples of this material. Conversion of U (IV) to U (VI) was excellent, the product being mainly uranyl fluoride. Feed 4 was of higher quality, and the U (IV) conversion to U (VI), as indicated by product samples 12-28 and a composite sample, was poor and was getting worse toward the end of the run in spite of higher reactor temperatures. The high temperatures at the end of the run were the cause of fusion and shutdown. The superior conversion of the low-grade feed is believed to be due to:

1. Oxygen/UF_4 feed ratios were based on the assumption that the pellets were greater than 90% UF; therefore, a large excess of oxygen was present for the low-grade feed.

2. Uranium oxides present in the feed entered into exothermic side reactions, producing heat directly in the pellets and thereby accelerating the conversion. Postulated reactions are:

$$3UO_2 + O_2 \longrightarrow U_3O_8$$

$$UO_2 + UF_6 \longrightarrow UF_4 + UO_2F_2$$

$$U_3O_8 + 2UF_6 \longrightarrow UF_4 + 4UO_2F_2$$

Therefore, as a guide for further runs, the following suggestions can be made:

1. The reactor should be operated to give longer hold-up in the hottest reaction zone; i.e., at the lowest feed rates consistent with maintenance of proper solids flow.

2. The highest operable temperatures should be obtained by using maximum preheating of pellets and oxygen, by combustion of carbon monoxide, and by reducing heat losses from the U_3O_8-lined reaction zone by external electrical heating.

3. Ample excess of oxygen should be supplied to the reaction zone.

4. An essentially oxide-free feed should be used to prevent loss of UF_6 product by parasitic side reactions.

Table 7. Chemical Analyses of Feed and Product Samples, Run 3

Sample [b]	Wt. (lb)	Amount (%)						
		Total U	U (IV)	U (VI) [a]	AOI	F	H_2O	C
Feed 1	115.5	77.26	32.48	44.78	13.1	14.7	0.05	0.004
Product								
2	6.5		6.85			12.6		
4	6.5		4.41			12.7		
6	9.0		4.18			12.4		
8	8.0		7.08			12.5		
10	7.0		5.52			12.6		
12	7.0		10.84			13.1		
Composite Product 1-12	89.5	76.73	4.98	71.75	3.02	12.3	0.06	0.006
Feed 4	117.0	75.60	68.87	6.73	2.6	21.9	0.05	0.04
Product								
14	6.0		47.09			19.2		
16	4.0		51.46			19.4		
18	5.0		56.48			20.0		
20	6.5		58.80			21.2		
22	6.0		57.31			21.0		
24	12.0		62.29			21.4		
26	14.5		63.85			21.5		
28	8.0		71.00			22.0		
Composite Product 14-24	69.0	75.62	53.00	22.62	0.79	20.9	0.05	0.01

(a) By difference

(b) Odd numbered product samples were not analyzed individually

Table 8. Estimated Composition of Feed and Product Samples from Run 3

Sample	Amount (%)				
	UF_4 [a]	UO_2F_2 [a]	UO_2 [a]	F (calc.) [b]	F (actual)
Feed 1	27.6	58.1	13.1	13.8	14.7
Product	3.0	92.8	3.0	12.1	12.3
Feed 4	87.2	8.7	2.6	22.3	21.9
Product	68.8	29.4	0.8	20.2	20.9

(a) Calculated from % U_{tot}, % U_{+4}, and % Ammonium Oxalate Insoluble

(b) Based on calculated composition

Table 9. Analysis of Different Colored Feed and Product Pellets from Run 3

Sample	Color	Amount (%)	
		AOI	Fluorine
Feed 1	Black	19.7	9.51
	Green	1.77	18.5
	Yellow	5.51	11.9
	Mixed [a]	14.94	14.9
Feed 4	Black	22.5	16.3
	Green	2.43	21.1
Products 3 through 7	Black	5.29	18.5
	Green	1.34	19.9
	Yellow	2.12	12.5
	Mixed [a]	2.11	15.9

(a) Residual pellets of no definite color

4.0 APPENDIX

Details of equipment installation, controls, and feed preparation are given. An outline of some of the chemical reactions involved is provided. Short descriptions of auxiliary drying, carbon removal, and rehydrofluorination runs required for modification of feed are given.

4.1 Equipment Details

The 4-in.-i.d. moving-bed reactor used earlier (Fig. 3) modified to a "continuous submerged bed" reactor by changing the preheater section so that its vertical axis would coincide with that of the reactor. The preheater section was made slightly longer, and additional heating elements were placed around it to increase the heat input. After the revision to the reactor proper was completed, the reactor and the ancillary components were mounted in cell 3 of Building 4505 (see Figs. 1, 2, 4-8).

Off-gas System. The off-gas system was the same as that used previously (Fig. 9). The gases passed from the reactor to a porous metal tube filter which removed entrained solids. The cleaned gas stream flowed to a dry ice trap in which the UF_6 was condensed. This trap is a 1-ton-capacity fluorine cylinder which provided a long residence time. Low temperatures were attained by packing dry ice around the cylinder. The noncondensable gases then passed through a chemical trap for removal of traces of UF_6, and the inert gases continued into the contaminated cell vent header.

Gas Flow and Control. Oil-pumped nitrogen and commercial oxygen were used. Copper, 0.25-in.-dia, conducted the gas from the cylinder supply to the instrument panel on which were mounted needle valves, rotameters, and two manometers. The needle valves were used to control the gas flow, the magnitude of which was indicated by the rotameters. One manometer indicated reactor pressure with respect to atmospheric, and the other manometer indicated internal differential pressure between the oxygen inlet and the off-gas outlet.

The oxygen, after going through the needle valve and rotameter, was directed to the reactor oxygen line (Figs. 1 and 2), and was eventually discharged into the center of the bed about 6 in. from the top of the reactor.

The nitrogen line on entering the instrument panel was directed to two needle valves and two rotameters, one set called "nitrogen top" and the other "nitrogen bottom." The "nitrogen top" line was then connected at the top inlet of the preheater section during the first two runs when carbon powder was used. During the last run in which carbon monoxide was used, the "nitrogen top" gas was connected to the nitrogen inlet of the feed can. Throughout the experimental work the "nitrogen bottom" line was connected to the bottom hopper section of the rotary discharge valve. The nitrogen gas served to direct the flow of both oxygen and carbon monoxide and was also used as a purge gas for reactor atmosphere control.

UNCLASSIFIED
ORNL-LR-DWG. 25674

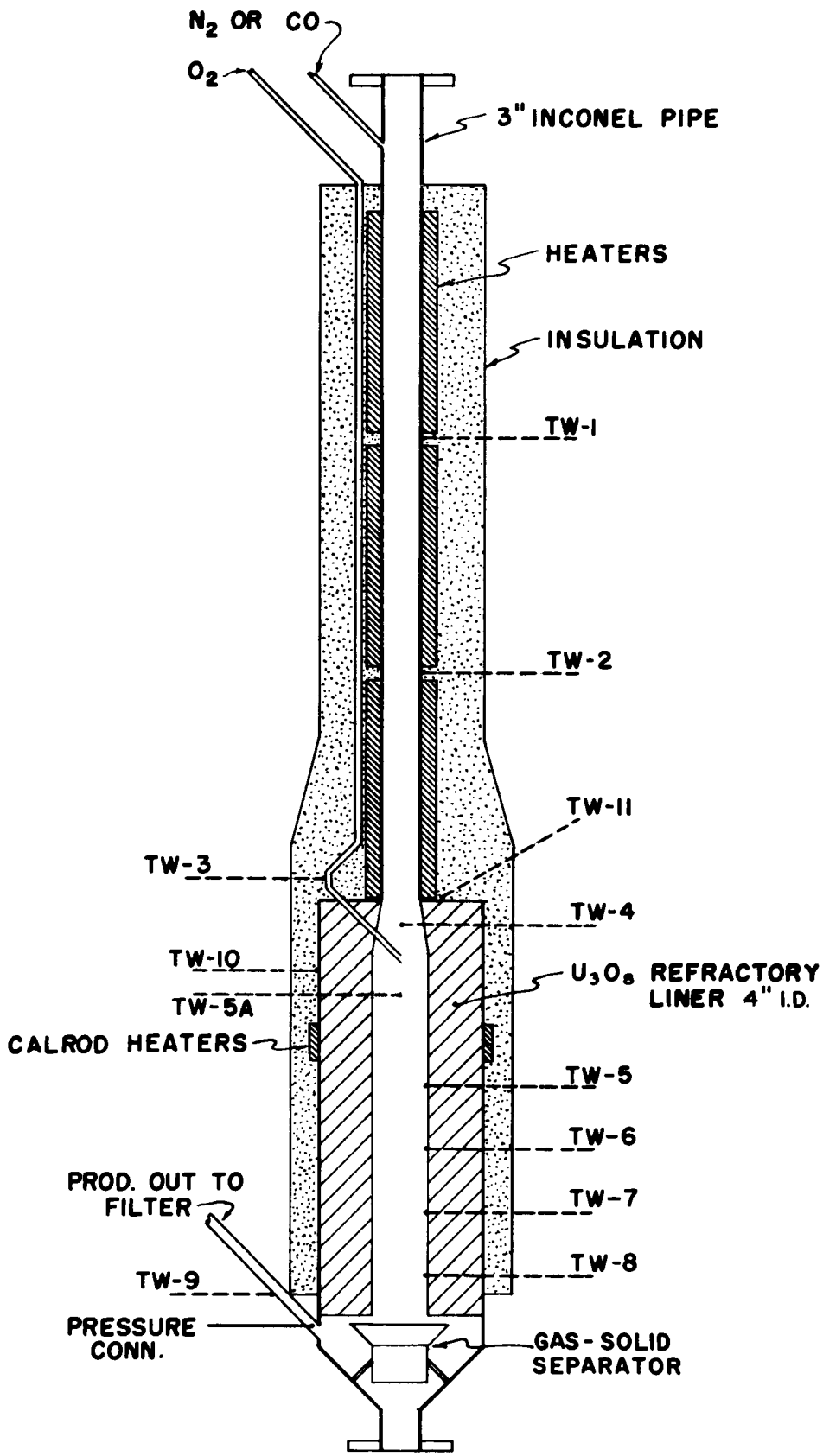

Fig. 1. Final Version of the Moving Bed Reactor

UNCLASSIFIED
ORNL-LR-DWG. 25675

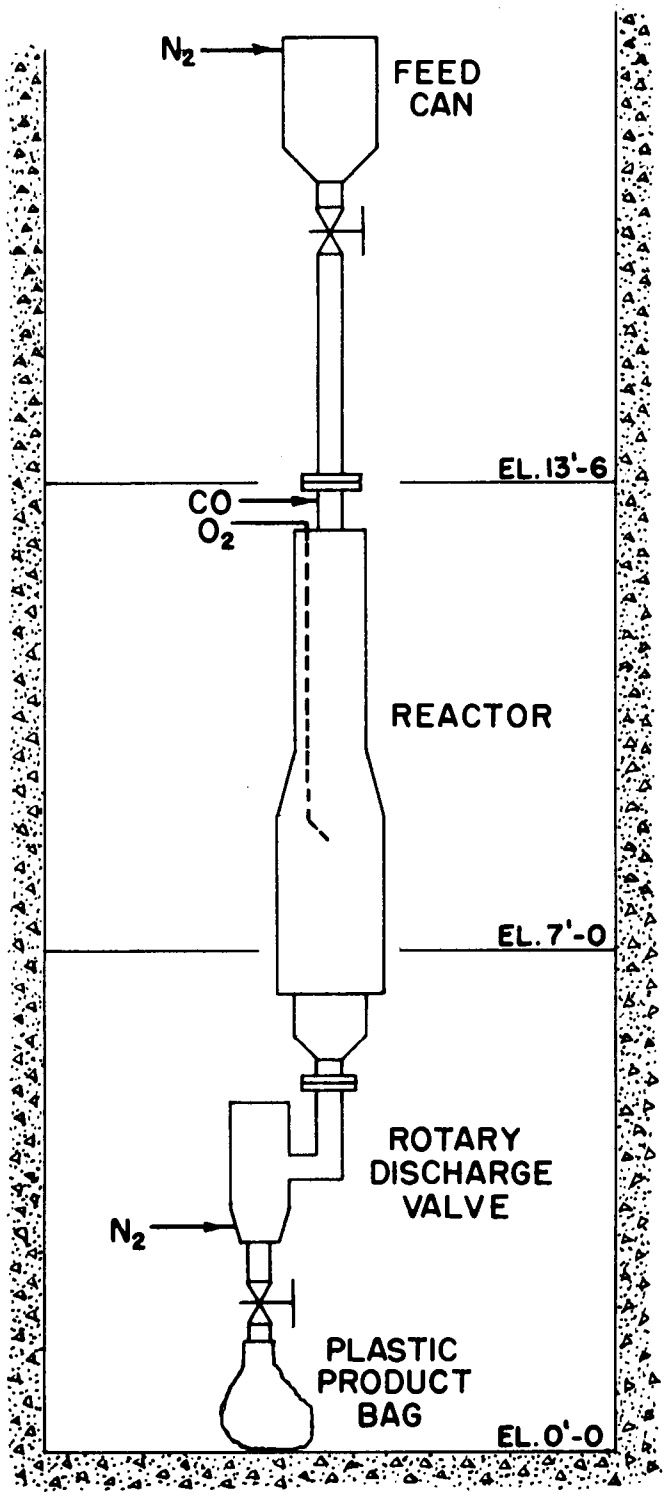

Fig. 2 Arrangement of Reactor Components

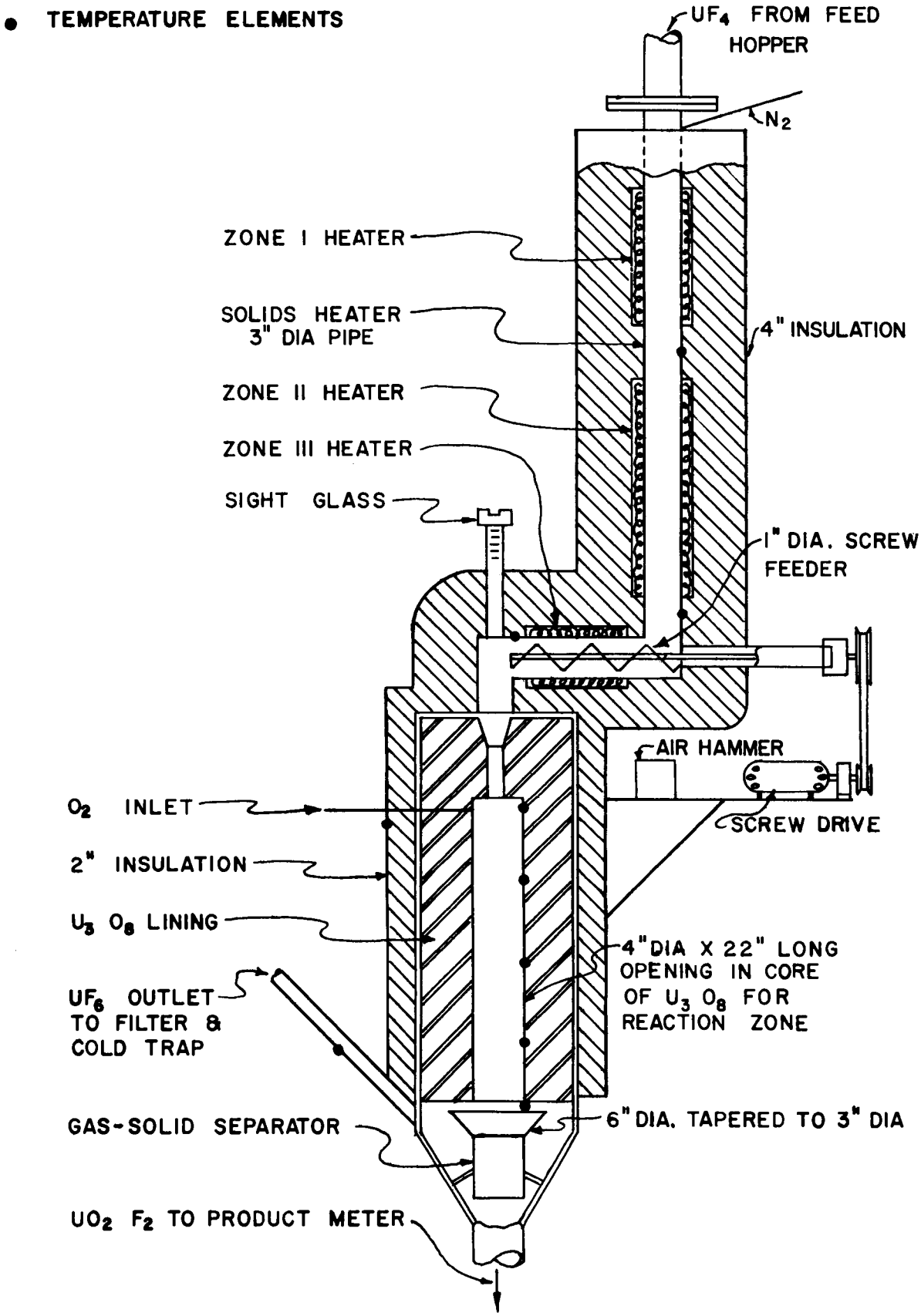

Fig. 3 - Oxidation Reactor

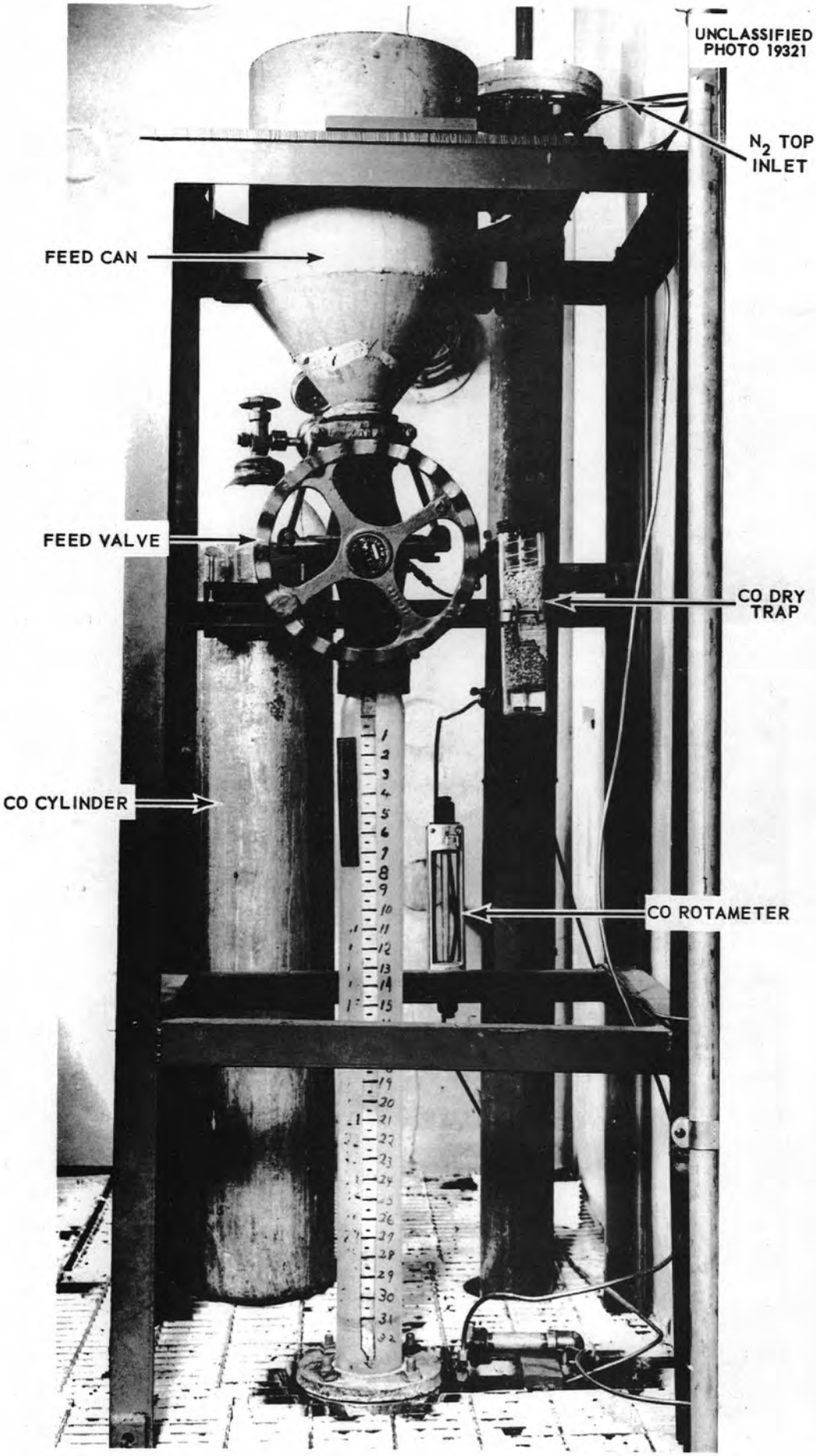

Fig. 4. Upper Reactor Components.

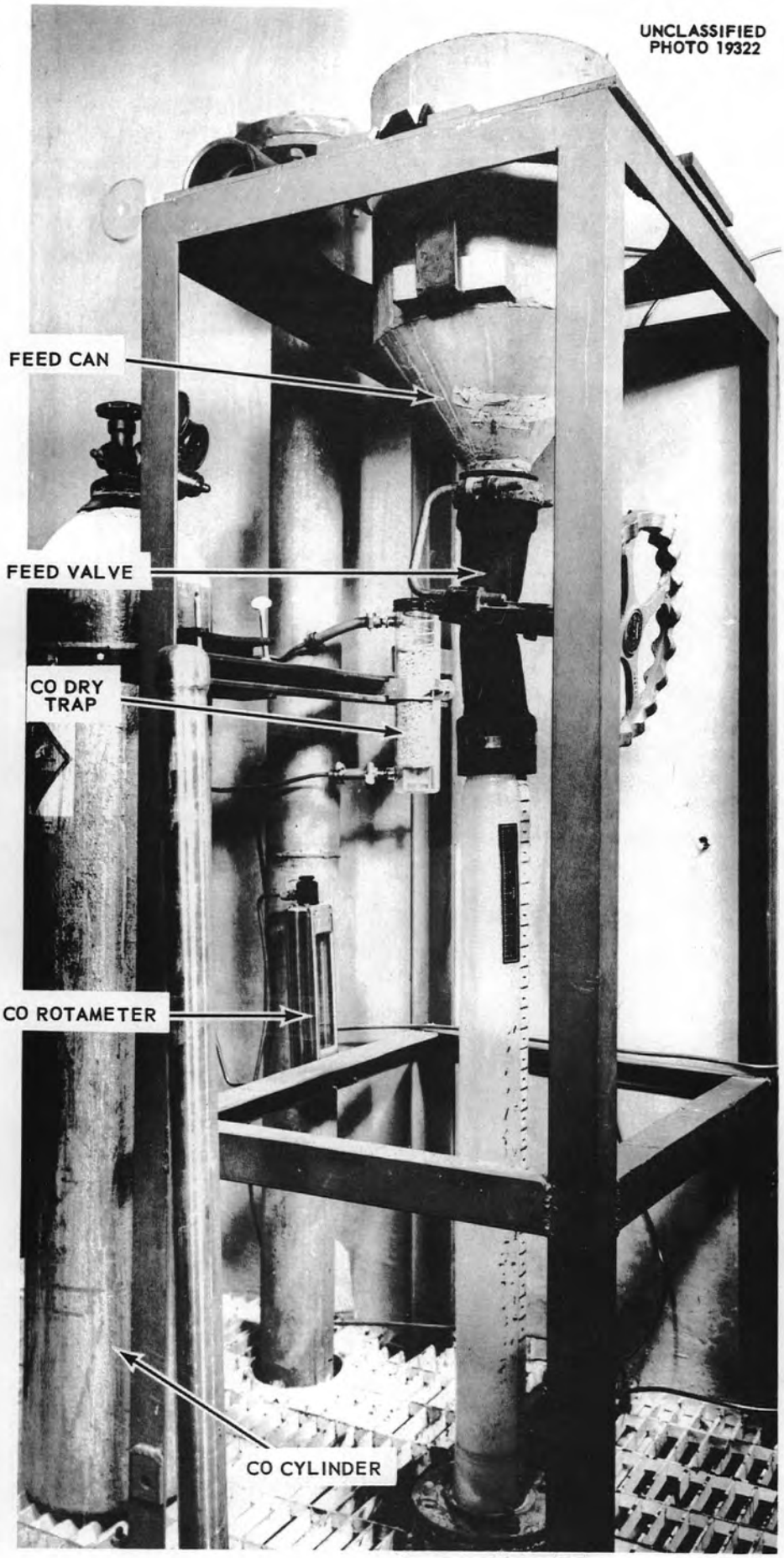

Fig. 5. Upper Reactor Components.

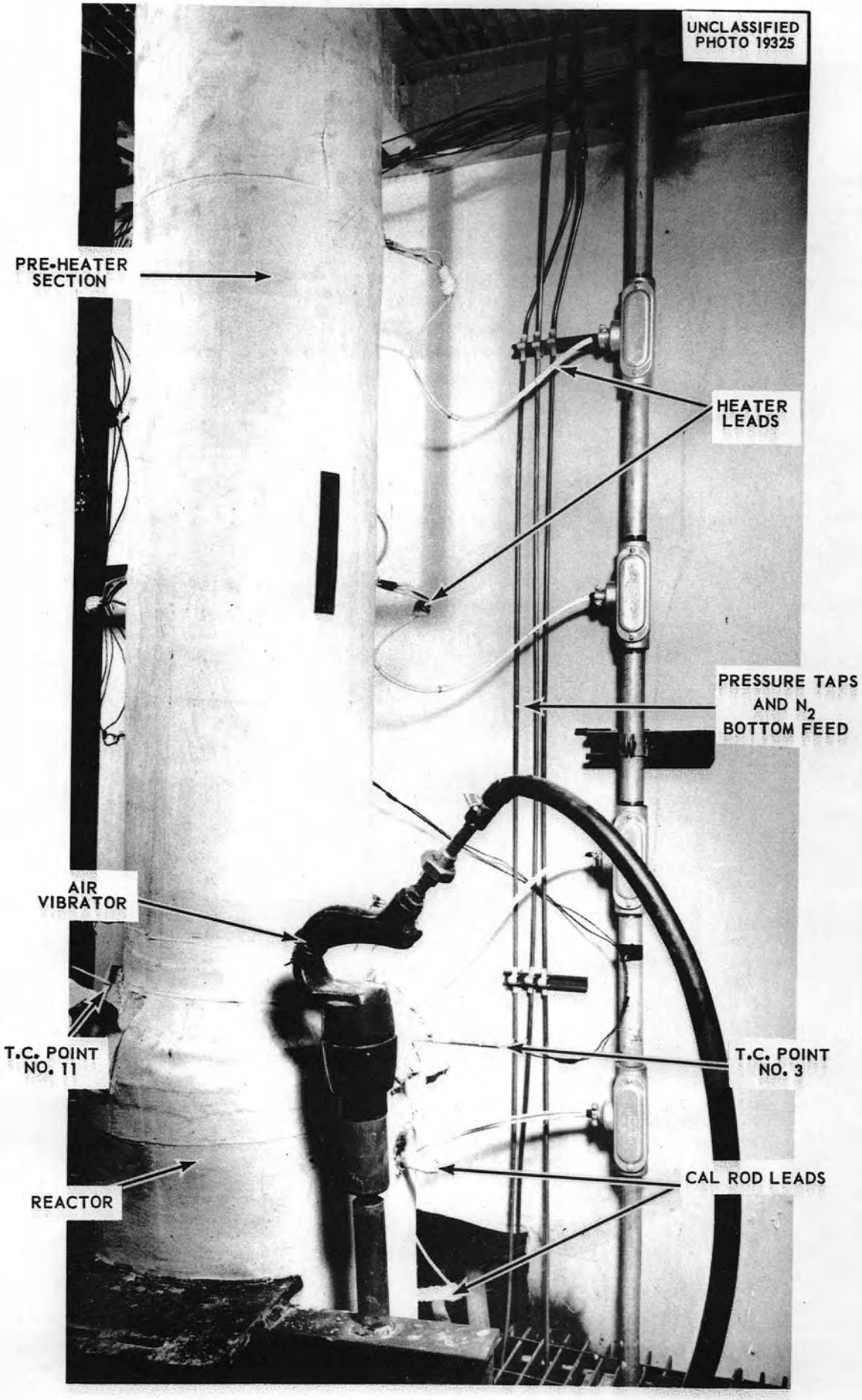

Fig. 6. Midsection of Reactor and Pre-Heater.

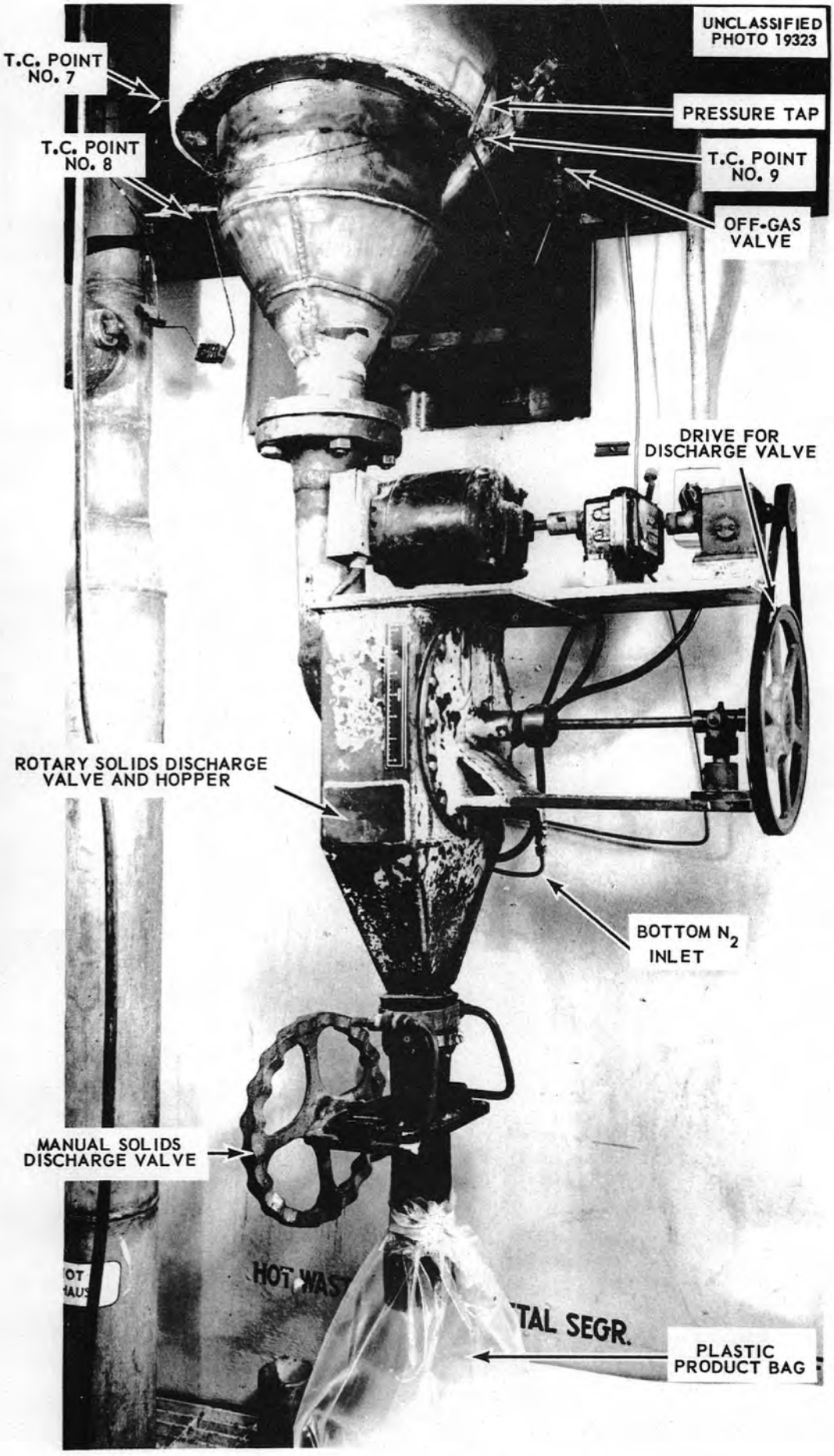

Fig. 7. Lower Reactor Components.

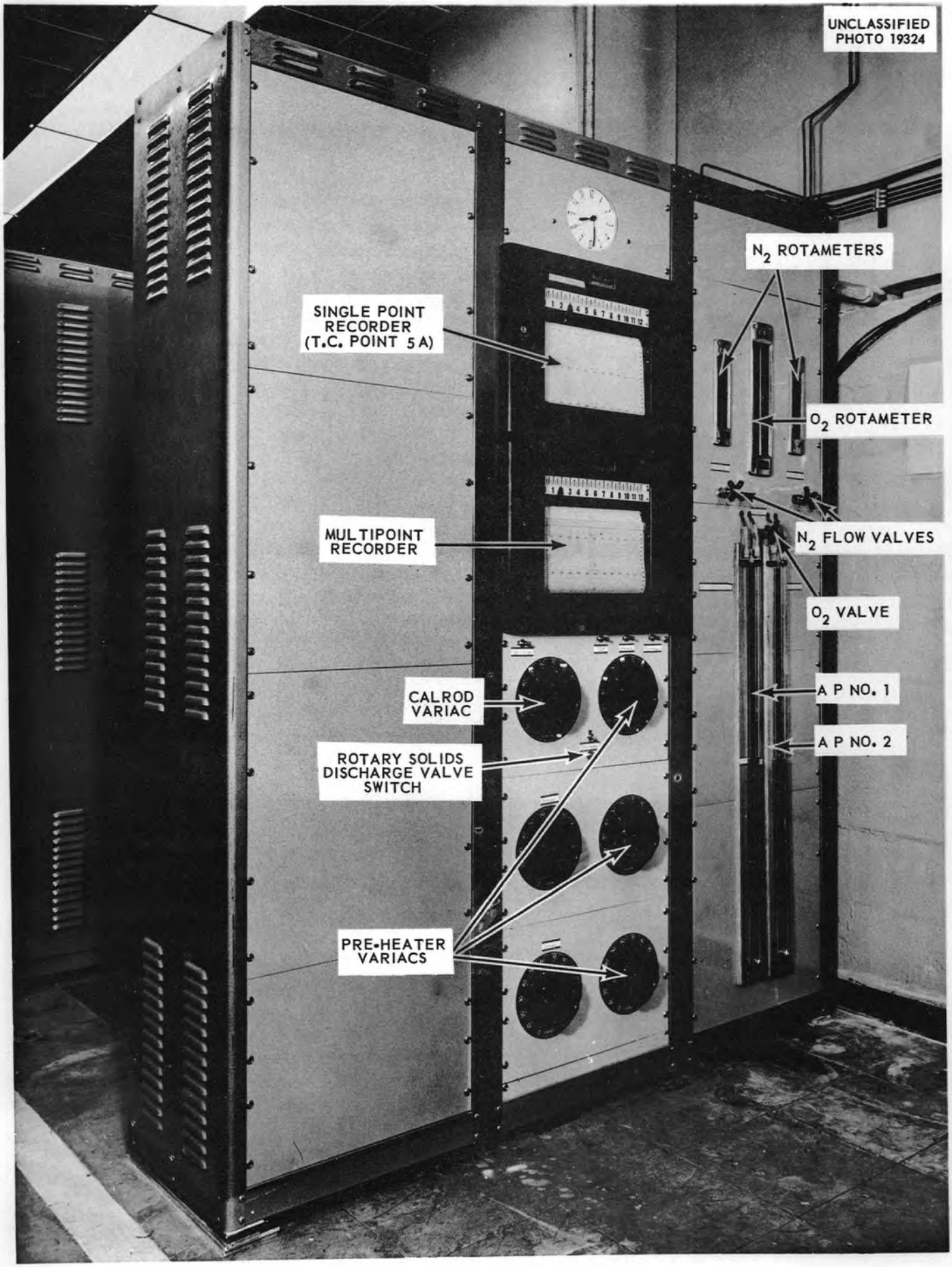

Fig. 8. Control Panel for Reactor.

UNCLASSIFIED
ORNL-LR DWG. 13983

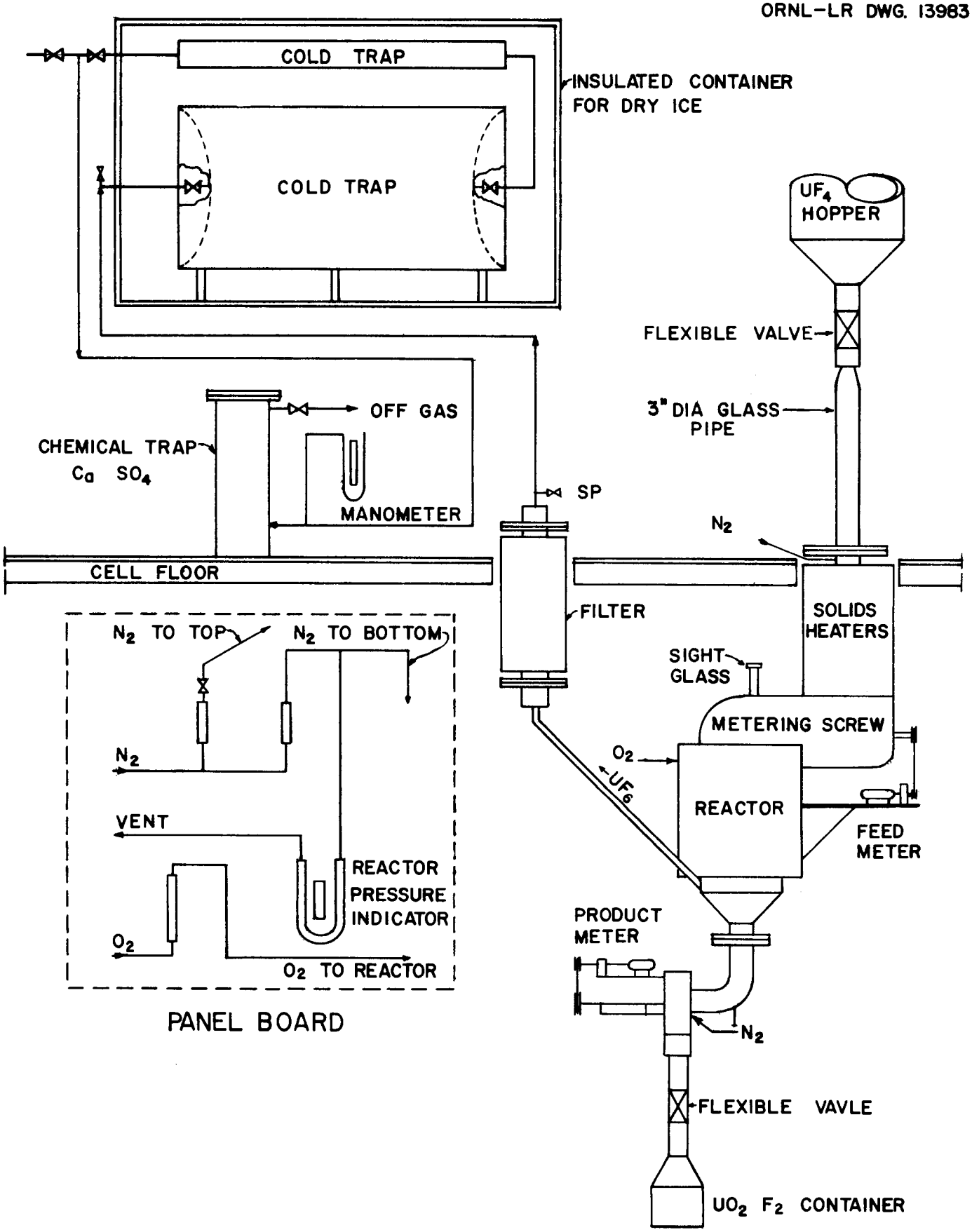

Fig. 9 Oxidation System

The carbon monoxide was supplied from a standard cylinder through a pressure-reducing valve, a drying trap, and a rotameter. The gas was then introduced into the top preheater inlet, which was formerly the "nitrogen top" inlet. During the time carbon monoxide was used, the usual safety precautions pertaining to this gas were observed.

The reactor off-gas line was connected to the existing off-gas system of cell 2.

Temperature Measurement and Control. The outer side of the preheater section and the reactor shell were heated by electrical heating elements. Six pairs of 3-in.-dia clamshell heating elements encircled the preheater section and were connected through three variac transformers so that the heat input to the top, middle, and bottom sections could be controlled independently. In addition to the preheater elements, two calrod heaters (2000 watts each) were wrapped on the outer side of the reactor shell about one-third the distance down from the top and were controlled by a fourth variac transformer.

Temperature measurements were taken at 12 points (Fig. 1) by means of chromel-alumel thermocouples placed in inconel thermowells and recorded on two temperature recorders. Eleven of these points were connected to a multipoint recorder as follows:

No. 1: Outer side of preheater wall between top and middle set of heaters.

No. 2: Same except between middle and bottom set of heaters.

No. 3: On the oxygen feed line between the preheater section and the reactor.

No. 4: At the center line of the reactor bed and 2 in. above the oxygen inlet.

Nos. 5 through 8: On the inner side of the reactor lining from the third to the bottom.

No. 9: On the off-gas outlet near the reactor shell.

No. 10: On the outer side of the reactor shell above the top calrod heater.

No. 11: Outer side of preheater wall at junction of the reactor shell (this last point was installed just before run 3 was started).

A single point recorder was connected to point 5A, located at the center line of the bed and 2 in. below the oxygen inlet.

Bed Movement and Control. To ensure continuous bed movement, an air hammer or vibrator was used and was controlled by a Flexopulse electrical control which was usually set so that the entire reactor assembly was vibrated for about 1-sec at 20-sec intervals.

The speed of the common shaft between the two speed reducers of the rotary valve discharge drive (Fig. 7) served as a means to determine the rate at which pellets were discharged from the reactor. Downward bed movement within the reaction zone was controlled by the rate at which pellets were discharged.

Feed Preparation. The feeds consisted of batches of material from previous reduction-hydrofluorination and carbon burnout runs. The previous experimental data were reviewed to aid in the selection of material which had a high UF_4 content and a carbon content of 0-0.5%, preferably 0.5%. The material was inspected visually for pellet condition and grade of green salt.

The materials selected were passed through the existing vibrating green equipment in Building 3592, with pellets whose size was roughly minus 3, plus 8 mesh being retained as good feed. The several batches of pellets were placed in drum containers and were thoroughly mixed and sampled. The samples were prepared and submitted for chemical analysis for carbon, moisture, fluoride, total uranium, and tetravalent uranium.

In addition to approximately 300 lb of good salt pellets, about 100 lb of crude UO_2F_2 pellets was also selected, screened, and sampled. This latter material was used as an inert heat transfer medium for pre-run operation. It was prepared, sampled, and analyzed in the same manner as the feed material.

4.2 Discussion of Chemical Reactions

With the impure feed materials available, it is possible for one or more of the following reactions to take place during the oxidation of UF_4:

$$2UF_4 + O_2 \longrightarrow UO_2F_2 + UF_6 \qquad (1)$$

$$9UF_4 + 4O_2 \longrightarrow U_3O_8 + 6UF_6 \qquad (2)$$

$$3UO_2 + O_2 \longrightarrow U_3O_8 \qquad (3)$$

$$U_3O_8 + 2UF_6 \longrightarrow UF_4 + 4UO_2F_2 \qquad (4)$$

$$UO_2 + UF_6 \longrightarrow UO_2F_2 + UF_4 \qquad (5)$$

$$UF_4 + 2H_2O \longrightarrow UO_2 + 4HF \qquad (6)$$

$$UF_6 + 2H_2O \longrightarrow UO_2F_2 + 4HF \qquad (7)$$

Prior development work[1] has indicated that the oxidation of UF_4 by dry oxygen in the temperature range 750-850°C proceeds essentially as in reaction 1. In the present tests, however, with impure feeds, a number of side reactions were possible and must be considered in order to interpret the results. The side reactions are represented by reactions 2 to 7, and may occur in various parts of the reactor system. The presence of UO_2 or U_3O_8 in the feed may result in parasitic consumption of UF_6 by reactions 4 and 5. The U_3O_8 reactor liner may also be involved in similar reactions. Water, if present anywhere in the reactor system, would also react with both UF_4 and UF_6 as shown by reactions 6 and 7. However, in the present series of oxidation runs, care was taken to exclude moisture from the reactor system.

The heat of reaction in the oxidation of UF_4 by oxygen is estimated to be small. To maintain a temperature of 750 to 850°C in the reaction zone and to allow for normal heat losses, heat must be added in excess of that supplied by the preheated pellets and the preheated oxygen. Since the walls of the reactor consist of a 4-in.-thick U_3O_8 refractory, heat cannot be added satisfactorily through the walls. Controlled amounts of powdered carbon or carbon monoxide, however, can be burned in the reaction zone so as to release their heat of combustion directly on the pellets. About 0.4 lb of carbon (or the heat equivalent of carbon monoxide) per 100 lb of feed material had been[2] found to maintain the pellets in the reaction zone in the 750 to 850°C range. This procedure was used in the present series of tests.

It was not possible to measure directly the volume or weight of UF_6 evolved, and direct evidence of the evolution of UF_6 was therefore only in qualitative tests. The relative amounts and analysis of the constituents of the feed and the resulting products can be used to give indirect evidence of UF_6 production.

Auxiliary Runs

During the course of the experimental work, the reactor was also used as a drying device and as a hydrofluorinating unit. The drying runs were necessary to obtain moisture-free feed material. Normal preheater and bed temperatures used, and an upward flow of nitrogen displaced the evolved water vapor, which was permitted to escape into the cell atmosphere.

---

(1) ORNL-2117, p. 19. "Fluorox Moving Bed Reactor for Producing UO_3, UF_4, and UF_6 Bibliography by J. E. Moore".

(2) CF-56-1-175 Chemical Technology Division UNOP Section Monthly Progress Report Jan. 1956, p. 10. Eister, W. K., et al.

Since the feed materials available were unsatisfactory with respect to their chemical analysis, several attempts were made to improve the grade of feed. For these runs, the reactor was modified slightly to accommodate gaseous hydrogen fluoride. Because of heavy condensation at the reactor outlet, bed movement could not be maintained and these runs were terminated.

One condition for the oxidation run in which carbon monoxide was used was to have the pellets relatively carbon-free. This condition was met by resorting to a pre-run in which slight oxidation at low temperatures took place, thus eliminating much of the carbon present. The resulting carbon-free pellets were used as the feed material for the oxidation run.

Drying Runs. The oxidation of UF_4 to UF_6 precludes the presence of water or water vapor. It was therefore necessary to dry the pelleted feed material before subjecting it to the oxidation experiments (Tables 10 and 11). Since drying facilities were not immediately available, the revised and relocated reactor was used as a drying device. The drying runs also served as shakedown runs to enable the experimenters to familiarize themselves with the operating characteristics of the different components associated with the reactor.

During the drying runs, a "bottom nitrogen" flow of about 10 ft^3/hr was maintained, which resulted in a reactor pressure of about 0.2 in. Hg. The flange joint between the feed tube and the top of the preheater was loosened. This permitted the moisture and the volatile ammonium and fluorine compounds evolved from the drying pellets to escape into the cell atmosphere. Feed was introduced into the reactor by opening the top rubber pinch valve periodically. The dried product was discharged continuously into the hopper of the rotary valve and was dropped from this hopper into the bottom plastic bag by opening the bottom rubber pinch valve periodically. The plastic bags containing the cooled, dried product, were removed at 1-hr intervals and were weighed as a check on the throughput rate, which was maintained at about 20 lb/hr.

During these drying runs, the bed movement was satisfactory and no operating difficulties were experienced. Several additional drying runs were later undertaken to provide a more satisfactory feed material, which was thought to contain less impurities. These latter drying runs were performed in much the same manner as those just described.

Table 10. Reactor Temperatures during Drying Runs

Location	Temp. (°C)
Preheater section, points 1 and 2	~675
Bed, point 4	550 to 675
Reactor shell, point 10	400 to 500

Table 11. Moisture content and Amount of Material Dried

Screened Material	Dried Weight	Water (%)	
		Before Drying	After Drying
Inert 1	123.5	0.51	0.14
Feed 1	191.0	0.39	0.09
Feed 2	152.0	0.57	0.09

Carbon Burnout Runs. Because carbon monoxide was to be used in one of the oxidation runs, all carbonaceous matter in the feed material had to be eliminated. This was accomplished by using the reactor assembly as a drying device and by having a slight oxidation take place at low temperatures within the individual pellets (Table 12). Products of oxidation were displaced upward and escaped into the cell atmosphere through the loosened flanged joint between the feed tube and the top of the preheater section. Essentially carbon-free pellets were removed from the bottom of the reactor assembly in plastic bags. These pellets were used as feed material for the regular oxidation run.

Table 12. Typical Conditions for Carbon Burnout Run

Preheater temperature (°C)	
point 1	350-430
point 2	375-435
Bed Temperatures (°C)	
point 4	400-480
point 5A	375-425
N_2 flow rate, bottom (ft^3/hr)	~ 12
O_2 flow rate (ft^3/hr)	~ 12
Feed rate (lb/hr)	~ 20

Hydrofluorination Runs. It was apparent from the results obtained with feeds used in the runs reported herein that better grade feed material would be highly desirable. It was planned to hydrofluorinate some of the existing relatively poor grade pelleted materials to obtain this better grade feed. Termination of the program on Dec. 4, 1956, prevented completion of this effort. The reactor and some of its components were revised so that it could be used as a hydrofluorinating device. This revision consisted of substituting a stainless steel feed pipe for the glass one previously used. This new feed pipe had a gas-solids disengagement section at its lower end where it joined the the top of the preheater section of the reactor. This, together with appropriate piping, permitted the escape of spent gases into an existing water condenser in the adjacent cell.

The existing hydrofluorinating facilities of the adjacent cell were used. These consisted of a cylinder containing the hydrofluoric acid, suitable heating devices to convert the HF liquid to a gas, and metering and flow control equipment. The gaseous HF was conducted by suitable piping to the former oxygen inlet of the reactor and, after entering the bed, the HF was displaced upward to escape through the modified feed tube. Both nitrogen lines were used to prevent downward flow of the HF with the solid product and to prevent the spent gases from entering the feed tube.

During the time required for the revision of the reactor, another batch of pellets (IOS-4-F-1), weighing 246 lb, was selected and screened.

The analysis was:

77.58% U (total)	14.3% F
15.9% U (H_2O soluble)	0.006% C
51.14% U (IV)	0.60 % H_2O
32.52% AOI	

104.5 lb of inert material from the preceding runs was first put into the reactor to act as a heat-transfer medium for the reactor lining. This inert material was followed by some of the IOS-4-F-1 feed.

Soon after the hydrofluorinating run was started, the reactor pressure increased. This was caused by heavy condensation at the gas-solids disengaging section of the new feed tube, and prevented the normal escape of the spent gases. During two additional attempts to hydrofluorinate, heat was applied to this disengaging section with no success. It was then planned to run an auxiliary air line to this section to dilute the spent gases; however, this last revision was never installed.

The conditions for the hydrofluorinating runs are summarized in Table 13.

Table 13. Actual Conditions during Hydrofluorination

Preheater temperatures (°C), points 1 and 2	600-650
Bed temperatures (°C),	
point 4	500-600
point 5A	500-575
Hydrofluoric acid flow rate (lb/hr), at 5.0 psig and 70°F	~3.75
Nitrogen flow rate, top and bottom, each (ft^3/hr)	~3
Pellet feed rate (lb/hr)	~20