[redacted]

MARTIN MARIETTA ENERGY SYSTEMS LIBRARIES
3 4456 0361205 3

CENTRAL RESEARCH LIBRARY
DOCUMENT COLLECTION

AEC RESEARCH AND DEVELOPMENT REPORT

ORNL-2420 cy. 4A
Controlled Thermonuclear Processes

DECLASSIFIED
CLASSIFICATION CHANGED TO:
BY AUTHORITY OF: E. J. Murphy 10-7-58
BY: R. D. Bartlett 11-29-58

DISSOCIATION OF H_2^+ AND D_2^+ BY A VACUUM CARBON ARC

C. F. Barnett
R. J. Mackin, Jr.
J. A. Ray

CENTRAL RESEARCH LIBRARY
DOCUMENT COLLECTION
LIBRARY LOAN COPY
DO NOT TRANSFER TO ANOTHER PERSON
If you wish someone else to see this document, send in name with document and the library will arrange a loan.

OAK RIDGE NATIONAL LABORATORY · U.S. ATOMIC ENERGY COMMISSION

This document contains Secret Restricted Data relating to Civilian Applications of Atomic Energy.

OAK RIDGE NATIONAL LABORATORY
OPERATED BY
UNION CARBIDE NUCLEAR COMPANY
Division of Union Carbide Corporation
UCC
POST OFFICE BOX X · OAK RIDGE, TENNESSEE

[redacted]

[redacted]

[redacted]

Printed in USA. Charge 45 cents. Available from the U. S. Atomic Energy Commission, Technical Information Extension, P. O. Box 1001, Oak Ridge, Tennessee. Please direct to the same address inquires covering the procurement of other classified AEC reports.

LEGAL NOTICE

This report was prepared as an account of Government sponsored work. Neither the United States, nor the Commission, nor any person acting on behalf of the Commission:

A. Makes any warranty or representation, express or implied, with respect to the accuracy, completeness, or usefulness of the information contained in this report, or that the use of any information, apparatus, method, or process disclosed in this report may not infringe privately owned rights; or

B. Assumes any liabilities with respect to the use of, or for damages resulting from the use of any information, apparatus, method, or process disclosed in this report.

As used in the above, "person acting on behalf of the Commission" includes any employee or contractor of the Commission to the extent that such employee or contractor prepares, handles or distributes, or provides access to, any information pursuant to his employment or contract with the Commission.

[redacted]

ORNL-2420

This document consists of 20 pages.
Copy 4 of 191 copies. Series A.

Contract No. W-7405-eng-26

THERMONUCLEAR EXPERIMENTAL DIVISION

DISSOCIATION OF H_2^+ AND D_2^+ BY A VACUUM CARBON ARC

C. F. Barnett
R. J. Mackin, Jr.
J. A. Ray

DATE ISSUED

DEC 6 1957

OAK RIDGE NATIONAL LABORATORY
Operated by
UNION CARBIDE NUCLEAR COMPANY
Division of Union Carbide Corporation
Post Office Box X
Oak Ridge, Tennessee

[redacted]

MARTIN MARIETTA ENERGY SYSTEMS LIBRARIES

[redacted] 3 4456 0361205 3

INTERNAL DISTRIBUTION

1. C. E. Center
2. Biology Library
3. Health Physics Library
4-5. Central Research Library
6. Reactor Experimental Engineering Library
7-11. Laboratory Records Department
12. Laboratory Records, ORNL R.C.
13. A. M. Weinberg
14. L. B. Emlet (K-25)
15. J. P. Murray (Y-12)
16. J. A. Swartout
17. E. H. Taylor
18. E. D. Shipley
19. A. H. Snell
20. M. L. Nelson
21. W. H. Jordan
22. G. E. Boyd
23. R. A. Charpie
24. S. C. Lind
25. F. L. Culler
26. A. Hollaender
27. J. H. Frye, Jr.
28. M. T. Kelley
29. J. L. Fowler
30. R. S. Livingston
31. K. Z. Morgan
32. T. A. Lincoln
33. A. S. Householder
34. C. P. Keim
35. C. E. Winters
36. D. S. Billington
37. E. P. Blizard
38. M. J. Skinner
39. A. Simon
40. M. Rankin
41. D. T. Goldman
42. E. Ivash
43. P. R. Bell
44. J. S. Luce
45. C. F. Barnett
46. C. D. Moak
47. R. J. Mackin, Jr.
48. W. F. Gauster
49. O. C. Yonts
50. W. R. Chambers
51. R. V. Neidigh
52. C. H. Weaver
53. R. J. Kerr
54. H. C. Hoy
55. J. R. McNally
56. T. K. Fowler
57. E. Guth
58. R. A. Dandl
59. H. P. Yockey
60. W. G. Stone
61. J. Neufeld
62. W. D. Manly
63. R. E. Clausing
64. T. A. Welton
65. C. E. Normand
66. G. F. Leichsenring
67. R. L. Knight
68. G. W. Blue
69. Virginia Glidewell
70. Sherwood Reading File (P. R. Bell)
71. ORNL - Y-12 Technical Library, Document Reference Section

EXTERNAL DISTRIBUTION

72-74. Air Force Ballistic Missile Division
75. Air Force Cambridge Research Center
76. AFPR, North American, Canoga Park
77. Air Technical Intelligence Center
78. Albuquerque Operations Office

[redacted]

79-82. Argonne National Laboratory
83. Armed Forces Special Weapons Project, Sandia
84. Armed Forces Special Weapons Project, Washington
85. Assistant Secretary of the Air Force, R&D
86-91. Atomic Energy Commission, Washington
92-94. Brookhaven National Laboratory
95. Bureau of Aeronautics
96. BAR, Aerojet-General, Azusa
97. Bureau of Ships
98. Chicago Operations Office
99. Division of International Affairs (Bishop)
100. General Electric Company (AMPD)
101-107. Los Alamos Scientific Laboratory
108. Lowry Air Force Base
109-110. Massachusetts Institute of Technology (Ashby)
111. National Advisory Committee for Aeronautics, Cleveland
112. National Bureau of Standards
113-114. Naval Research Laboratory
115. New York Operations Office
116-118. New York University
119. Oak Ridge Operations Office (H. M. Roth)
120. Office of Naval Research
121. Office of the Chief of Naval Operations (OP-361)
122. Patent Branch, Washington
123-128. Princeton University
129. Princeton University (Smyth)
130. Redstone Arsenal
131. San Francisco Operations Office
132. Sandia Corporation, Livermore
133. USAF Project Rand
134-139. University of California Radiation Laboratory, Berkeley
140-146. University of California Radiation Laboratory, Livermore
147. University of Illinois
148. University of Michigan
149. Westinghouse Electric Company (Biondi)
150. Westinghouse Electric Company (Shoupp)
151-190. Technical Information Service Extension (For Official AEC Use)
191. Sandia Corporation

[redacted]

ABSTRACT

The efficiency of the carbon arc to dissociate diatomic hydrogen and deuterium ions has been measured for ion energies of 600 kev. The measured dissociation efficiency for hydrogen was $10.6 \begin{smallmatrix} +2.1 \\ -0.9 \end{smallmatrix}$ per cent and for deuterium $16.4 \begin{smallmatrix} +1.6 \\ -1.2 \end{smallmatrix}$ per cent. It was found that the dissociation was dependent upon the electrode geometry, distance of dissociation from anode, and measured arc current.

[redacted]

[redacted]

Introduction

Previous measurements[1] have indicated that the cross section for dissociation of the diatomic hydrogen ion by impact with a gas atom is a slowly varying function of the particle velocity. In the energy interval between 500 kev and 2.25 Mev the cross section has a 1/v dependence for light target gases, hydrogen, and helium; however, for heavier gases, nitrogen and argon, the cross section decreases only 10-20% throughout the energy range. Salpeter[2], using a Born approximation, predicts the cross section to have a $1/v^2$ dependence in gases. Since no adequate explanation has been advanced for the high efficiency of the carbon arc[3] to dissociate H_2^+ at energies of 30 kev, it was believed advisable to extend the dissociation efficiency measurements to particle energies up to 600 kev. With the efficiency of the carbon arc and the cross sections for various loss processes known, a calculation may be made to determine the rate of entrapment of proton in DCX.[4]

If it is assumed that dissociation of the diatomic ions is the resultant of particle interaction (although electron and photon reactions are not certainly excluded), then one may write the following probable reactions leading to dissociation:

(1) $H_2^+ + C^n \longrightarrow H^\circ + H^+ + C^n$

(2) $H_2^+ + C^n \longrightarrow 2\,H^+ + e + C^n$

(3) $H_2^+ + C^n \longrightarrow 2\,H^+ + C^{n-1}$

[redacted]

where n may vary from 0 to the highest states of ionization in the arc. The first two reactions involve electronic excitation, while reaction 3 is a charge exchange reaction with the carbon ion capturing the electron from the diatomic ion. The present experiment cannot distinguish between (2) and (3); however, by using a charge balance between H° and H^+ one can determine roughly the fraction of the reaction proceeding by (1) and the fraction proceeding by (2) plus (3). The terminology used in this paper will be that (1) is a simple dissociation reaction, (2) is an ionizing dissociation reaction, and (3) is a charge exchange reaction. One cannot exclude entirely dissociation due to excitation of the vibrational levels of the molecule on collisions with arc electrons. For simplicity, the dissociation efficiency will be defined as the ratio of the H^+ current to the sum of the H^+ and the H_2^+ current.

Apparatus and Procedure

A schematic diagram is shown in Fig. 1. The ions were formed in a conventional RF ion source and accelerated to 600 kev by the ORNL cascade accelerator. Mass analysis was accomplished by means of a 90° magnetic analyzer. The analyzed ion beam was defined by a movable 1/8 inch aperture placed directly in front of the solenoid containing the carbon arc chamber. On the exit side of the arc chamber was a fan-shaped vacuum chamber in which an ion detector could be moved vertically to measure the various beams emerging from the chamber. The backing plate of the chamber consisted of quartz windows so that the various beams could be observed visually.

The initial beam was analyzed into five separate beams by passing through the solenoid. In the region between the solenoid and the analyzing magnet, a fraction of the diatomic ions was dissociated into protons and neutral atoms. The protons from this dissociation were deflected through a large angle by the solenoid field, whereas the neutral particles traveled in an undeflected trajectory. In addition to these two beams, there was also a proton and neutral particle beam resulting from dissociation in the arc. This neutral beam was separated from the predissociated beam since the H_2^+ was deflected by the magnetic field before suffering a dissociation collision in the arc. There was also present the beam of H_2^+ which had not been dissociated.

The dissociation process was found to take place along the diameter of the arc, resulting in the protons and atoms being formed at different positions in the magnetic field. This caused a vertical spread of the proton and neutral beam of approximately 1 inch, which was larger than the detector aperture. In measuring ion beam intensities, the detector was moved at a constant linear rate across each beam by a synchronous motor and the beam current measured by an electrometer whose output was plotted by a Brown recorder. The area under the recorder trace was integrated with a planimeter to determine the beam intensity. The procedure consisted of measuring, in turn, H_2^+, H^+, H°, and H_2^+. When the two H_2^+ recordings differed by more than 10 per cent, the run was discarded.

A more detailed diagram of the solenoid and arc chamber is shown in Fig. 2. The chamber was an evacuated stainless steel tube 6 feet long and 4 inches in diameter. Surrounding this tube was the magnetic coil consisting of seven layers of water-cooled copper tubing, each layer containing

[redacted]

3.2 turns/inch. The coil was broken in the center to provide a gap of 2 inches for the beam entrance and exit ports. Inside the tube was a 3 inch diameter water-cooled copper liner to dissipate the power radiated from the arc. The arc electrodes were Union Carbide C-18 grade graphite pressed into water-cooled copper sleeves. Quartz tubing was placed around the cathode assembly to prevent arc-over in the fringing magnetic field region. Various configurations of anodes were used; and these will be discussed below. The anode and cathode assemblies were mounted so that the arc length could be varied between 6 inches and 4 feet.

The detection of the energetic particles was complicated by high RF fields produced by the arc, and also by a copious supply of photoelectrons ejected from the detector and from walls surrounding the detector region by the intense ultraviolet radiation from the arc. The detector found most feasible consisted of a Faraday cup and biased suppressor ring mounted inside a completely shielded box through a 50 μ-inch Ni foil soldered over a 3/8 inch aperture. The foil was sufficiently thick to insure an equilibrium charge distribution between energetic positive ions and neutral particles emerging from the back surface. The characteristic charge distribution was independent[5] of the initial charge state and dependent only on the particle energy and foil thickness. The incident H_2^+ beam was immediately dissociated at the surface of the foil, resulting in two particles of half energy, each of which registered with the same efficiency as the H° and H^+.

[redacted]

The procedure used in striking the carbon arc was the one customary with shorter DC arcs.[3] To the arc electrodes were applied 250 volts, D. C. (open circuit voltage of the four series-connected welding generators which supplied arc power) and a comparable RF voltage. When gas was admitted through a passage in the cathode, an RF arc appeared, followed immediately by the main discharge. The RF voltage and the gas input were removed as soon as the DC arc had fired. Thereafter, the arc was supported solely by carbon vaporized from the electrodes. Three hundred amperes was the customary arc current, and voltages ranged from 70 to 100 volts, depending upon arc length. The relationship is shown in Fig. 4, in which the slope of the curve is found to be 1.0 volt/inch.

Results

For a 600 kev H_2^+ particle the average efficiency obtained was $10.6 \begin{smallmatrix} +2.1 \\ -0.9 \end{smallmatrix}$ per cent, which may be compared to an average efficiency of $16.4 \begin{smallmatrix} +1.6 \\ -1.2 \end{smallmatrix}$ per cent for a D_2^+ particle of the same kinetic energy. These efficiencies were measured at a distance of six inches from the arc anode. The arc conditions were (1) 300 amp arc current, (2) 3/8" dia. cathode, and (3) 3/4" dia. anode. The errors are the maximum deviations from the average value. Attempts to measure the velocity dependence of the efficiency with an H_2^+ beam were unsuccessful due to difficulties encountered with the detector at lower particle energies. If it is assumed that the deuterium ion and hydrogen ion will have the same inelastic collision cross section at identical velocities, then the above values are consistent with a 1/v dependence for the efficiency. It is not readily possible to

[redacted]

compare these figures with those measured at lower energies in another geometry [3] because the distance from the anode is a critical factor, as will be seen.

By making a charge or particle balance between the dissociated beams of H° and H^+ and the undissociated H_2^+, it is possible to determine the fraction of the reactions proceding by simple dissociation or by an ionizing dissociation and charge exchange. For the H_2^+ particles, the fraction going as simple dissociation was found to be 80% for a 600 kev. beam. For a deuterium particle, this percentage decreased to 65%. This may be contrasted with dissociation of H_2^+ by gas impact where it was found[1] that the fraction of the reactions going by simple dissociation was independent of the particle velocity in the energy range of 500 kev - 2.25 Mev. However, the fraction was dependent on the nature of the target atom, or molecule. In the present experiment, there could not be excluded the possibility of the ionization in the arc of some of the H° produced by dissociation in the arc.

In a device such as DCX, it is desirable that the dissociated H^+ particle, with its multiple traversals of the arc, does not capture an electron from either the free electrons or the charged or neutral components of the arc. To determine the magnitude of the electron capture, a 300 kev proton beam was passed through the arc and the appropriate region was scanned for the presence of neutrals. It was possible to place an upper limit of less than one part in 10^5 for the electron capture. This upper limit was determined by the sensitivity of the detector and the background in the detector circuit.

[redacted]

[redacted]

Numerous changes were made in the geometry of the electrodes to determine optimum conditions. The initial geometry consisted of a cathode 1/2 inch in diameter and 10 inches long, with a 1/8 inch longitudinal bore to admit gas to the arc. The anode was 1-1/2 inches in diameter and 1-1/2 inches long. Visual observation showed the arc to be diverging to approximately 1 inch in the center of the solenoid. This divergence was the result of magnetic field bowing in the 2 inch solenoid gap which was necessary to provide an entrance and exit aperture for the particle beam. This visual observation was confirmed by placing a carbon disc in the center of the solenoid and measuring the diameter of the hole burned through it. If the dissociation of the carbon arc was the result of particle interactions, which would be proportional to the density, then the density of particles would be smaller in the bowed region which would result in decreased dissociation. To decrease the diameter of the arc, the cathode diameter was decreased to 3/8 inch. With this smaller cathode, the diameter of the arc in the central region was 3/4 inch. Attempts to decrease the diameter of the cathode to 1/4 inch were unsuccessful; the cathodes shattered when current was passed through them. Previous experiments[6] have indicated that the efficiency for dissociation at low particle energies is dependent on the temperature of the anode. By decreasing the anode diameter to 3/4 inch, the radiant heat was decreased with a gain of a factor 1.3 in the dissociation efficiency.

The efficiency of dissociation was found to be dependent upon the distance of the anode from the axial position of the beam path. In Fig. 5 is shown the efficiency as a function of this distance to the anode (for a

[redacted]

1.5 inch anode diameter). In moving the anode from a position 3 inches from the H_2^+ beam to 21 inches, the efficiency decreased from 10.1% to 4.9%. Also shown in Fig. 5 is the total radiant energy as a function of the anode distance. This was measured by a thermal detector placed in the same position as the particle detector. This thermal detector consisted of a copper ring with a 25 μ-inch Ni foil soldered to the front surface. Soldered to the center of the Ni foil was a fine Cu wire, which formed a thermocouple indicator with low heat loss, short time constant, and sensitivity the order of μ-watts. Absorbers of glass, quartz, and fluorite all absorbed greater than 95% of the radiant energy emitted by the arc. It will be noticed in Fig. 5 that the slope of the radiant energy curve is similar to the slope of the dissociation efficiency. Both the efficiency and the radiant energy were independent of the cathode position. It may be inferred from the radiant energy curve either that the density of radiating particles is increasing or that the state of excitation of the particles is increasing as regions closer to the anode are examined.

In Fig. 6 is plotted the dissociated H^+ current as a function of the measured arc current. The arc current was varied from 160 amps to 325 amps with a corresponding 1.3-fold increase in the H^+ current.

Attempts to measure the attenuation of various beams by measuring currents with and without the arc were unsuccessful due to the pumping action of the carbon arc. The pressure in the solenoid was reduced by a factor of three with the carbon arc operating, following an initial outgassing period. The lowest pressure obtained in the vacuum system was

4×10^{-6} mm Hg. as measured by a VG-1a ionization gauge placed eight inches from the arc along the beam tube.

Experiments are continuing on the dissociation produced by the carbon arc at lower particle energies. Also, various energetic particles are being studied to learn more about the nature of the processes taking place.

Acknowledgments

It is a pleasure to acknowledge the help and comments of various members of the Thermonuclear Experimental Division. Special acknowledgment is made to J. S. Luce for suggesting the work and for his help in leading the design group of H. C. Hoy, G. F. Leichsenring, and R. L. Knight in designing the arc assembly and solenoid. The many helpful comments and suggestions of Drs. E. D. Shipley, P. R. Bell, C. D. Moak, and R. A. Dandl are greatly appreciated.

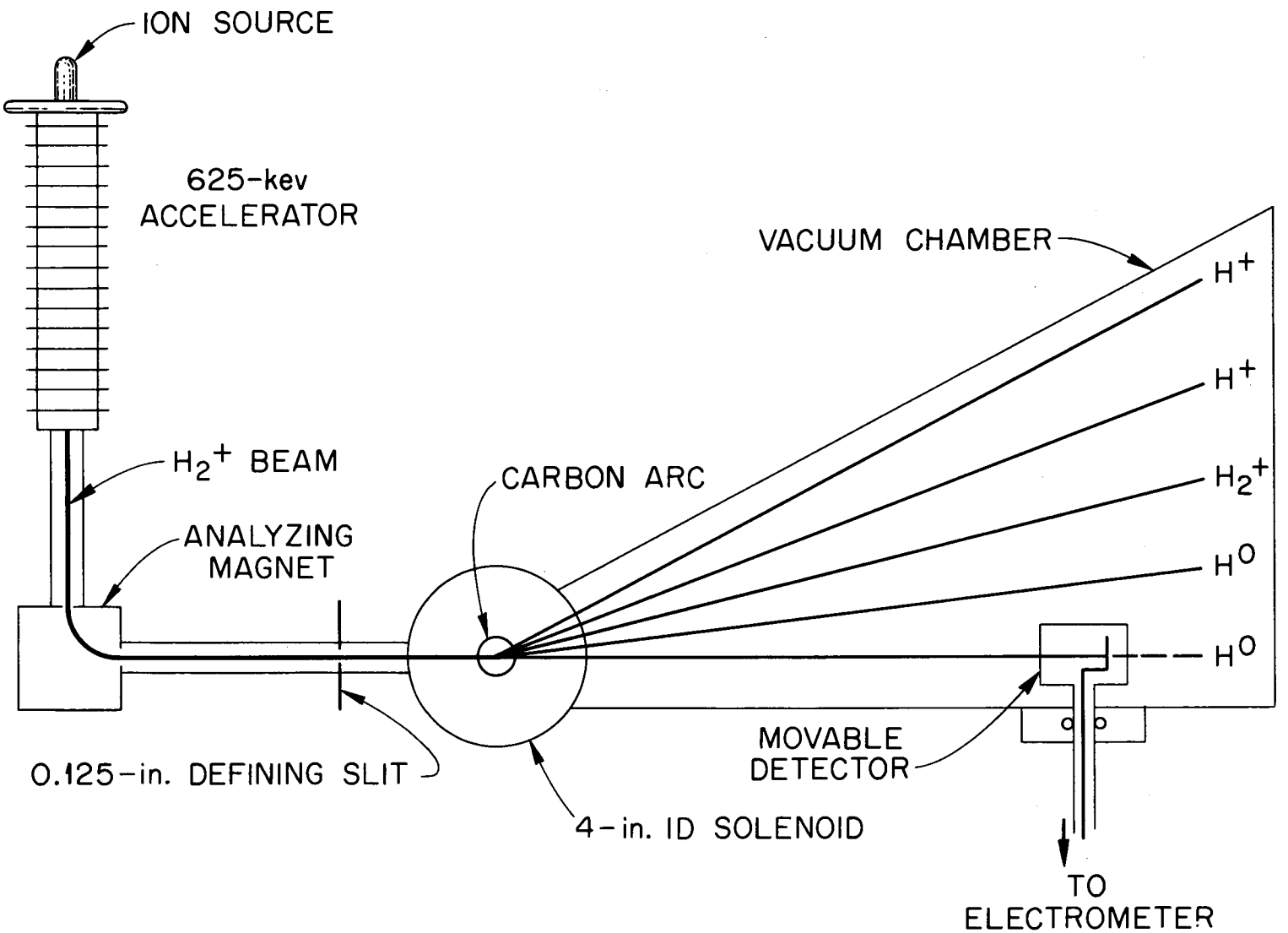
ION SOURCE
625-kev
ACCELERATOR
VACUUM CHAMBER
H^+
H^+
H_2^+
H^0
H^0
H_2^+ BEAM
CARBON ARC
ANALYZING
MAGNET
MOVABLE
DETECTOR
0.125-in. DEFINING SLIT
4-in. ID SOLENOID
TO
ELECTROMETER

Figure 1

[redacted]
ORNL-LR-DWG 21285

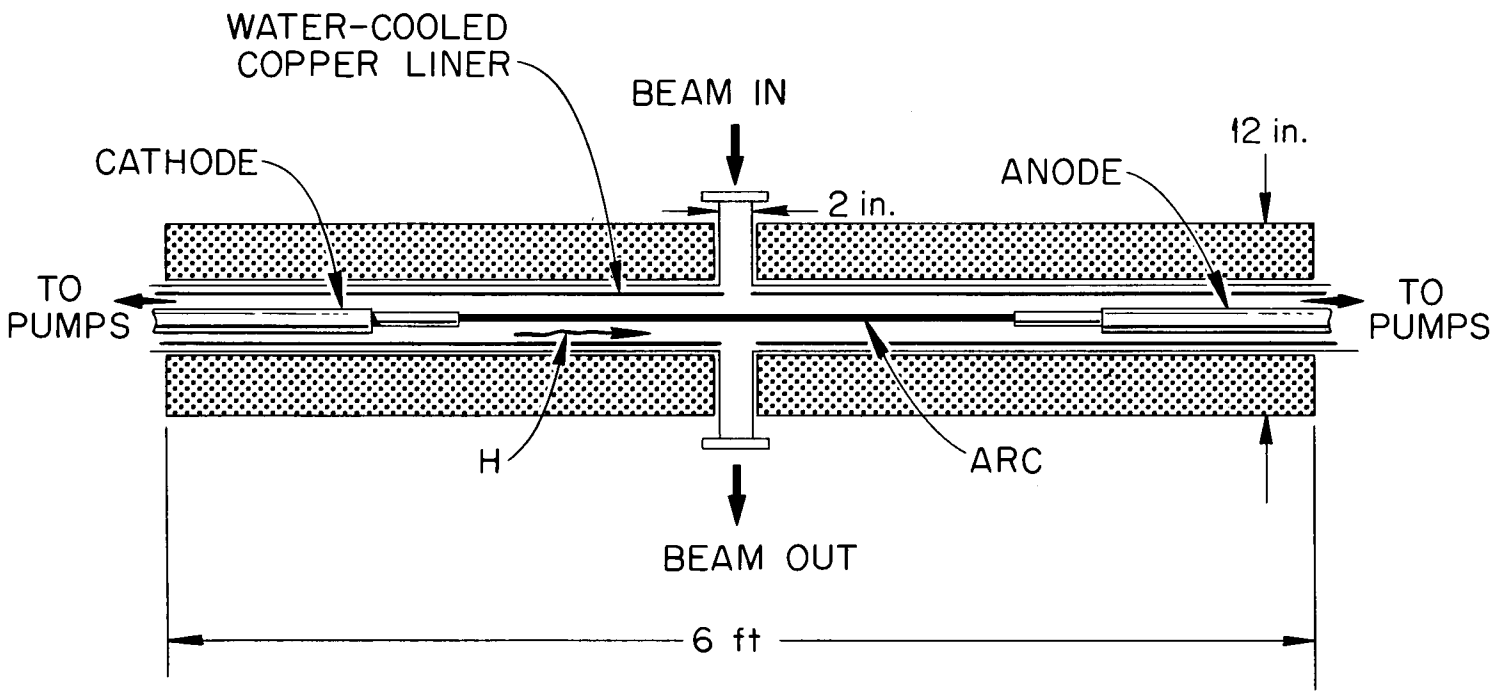

Figure 2

UNCLASSIFIED
ORNL-LR-DWG 21283

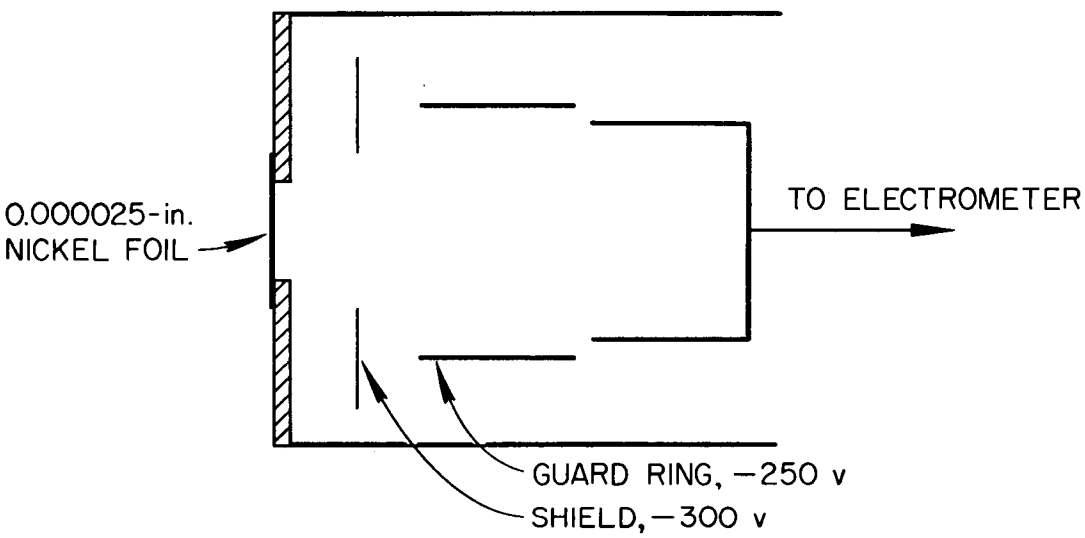

Particle Detector

Figure 3

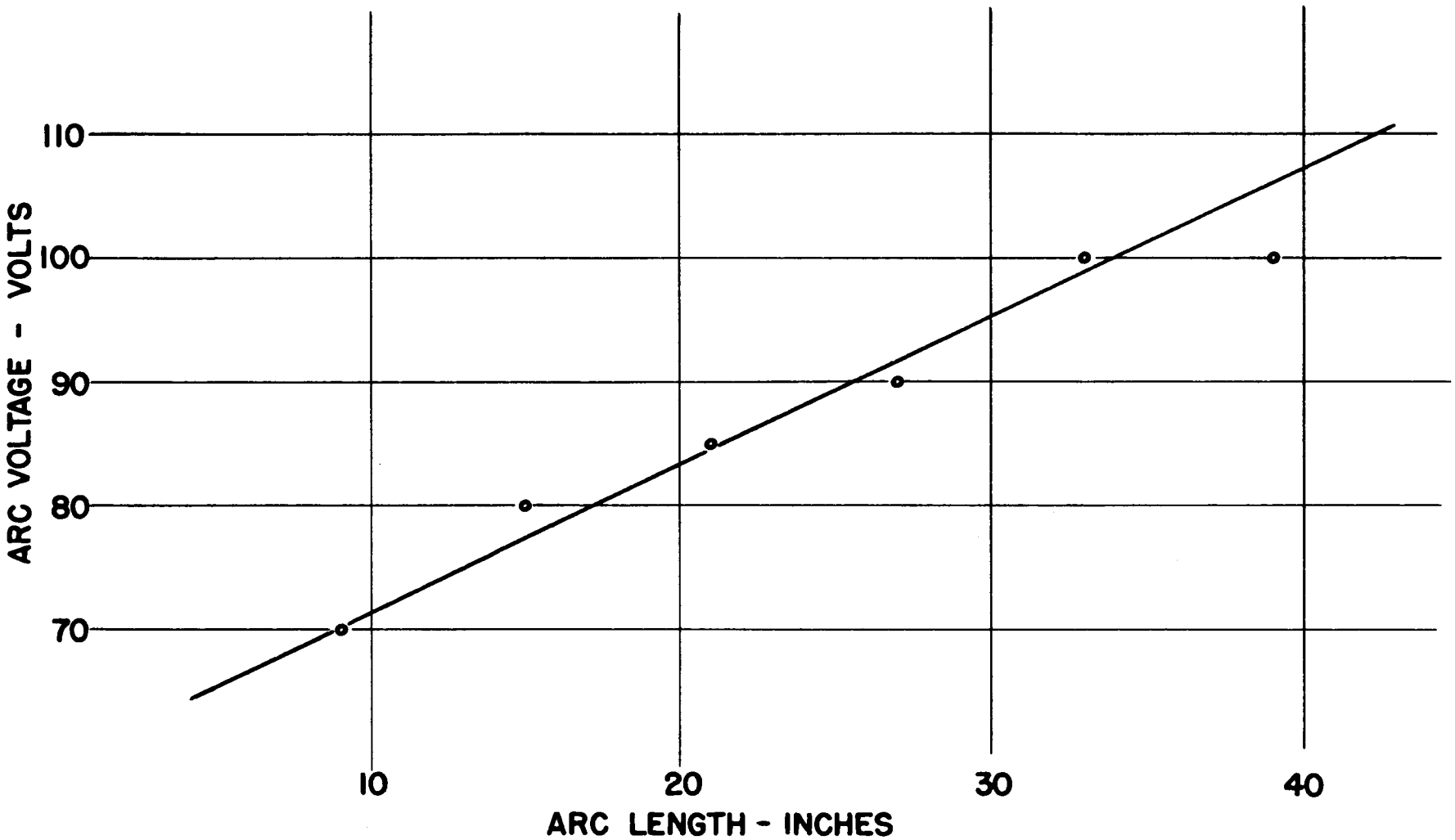

FIGURE 4 - CARBON ARC VOLTAGE AS A FUNCTION OF ARC LENGTH

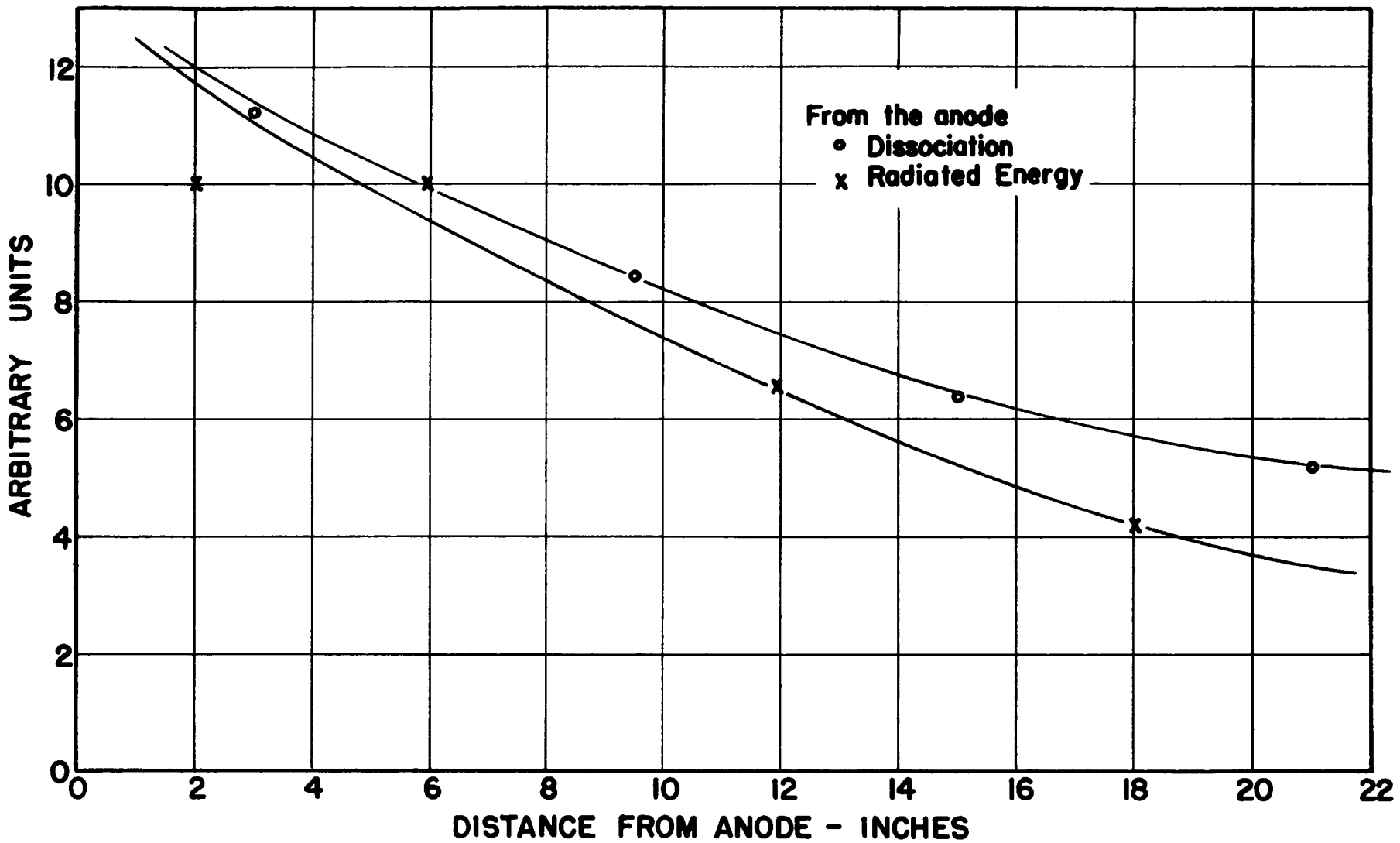

FIGURE 5 - H_2^+ DISSOCIATION AND ENERGY RADIATED FROM THE ARC AS A FUNCTION OF THE DISTANCE FROM THE ANODE.

ORNL-LR-Dwg.-24143

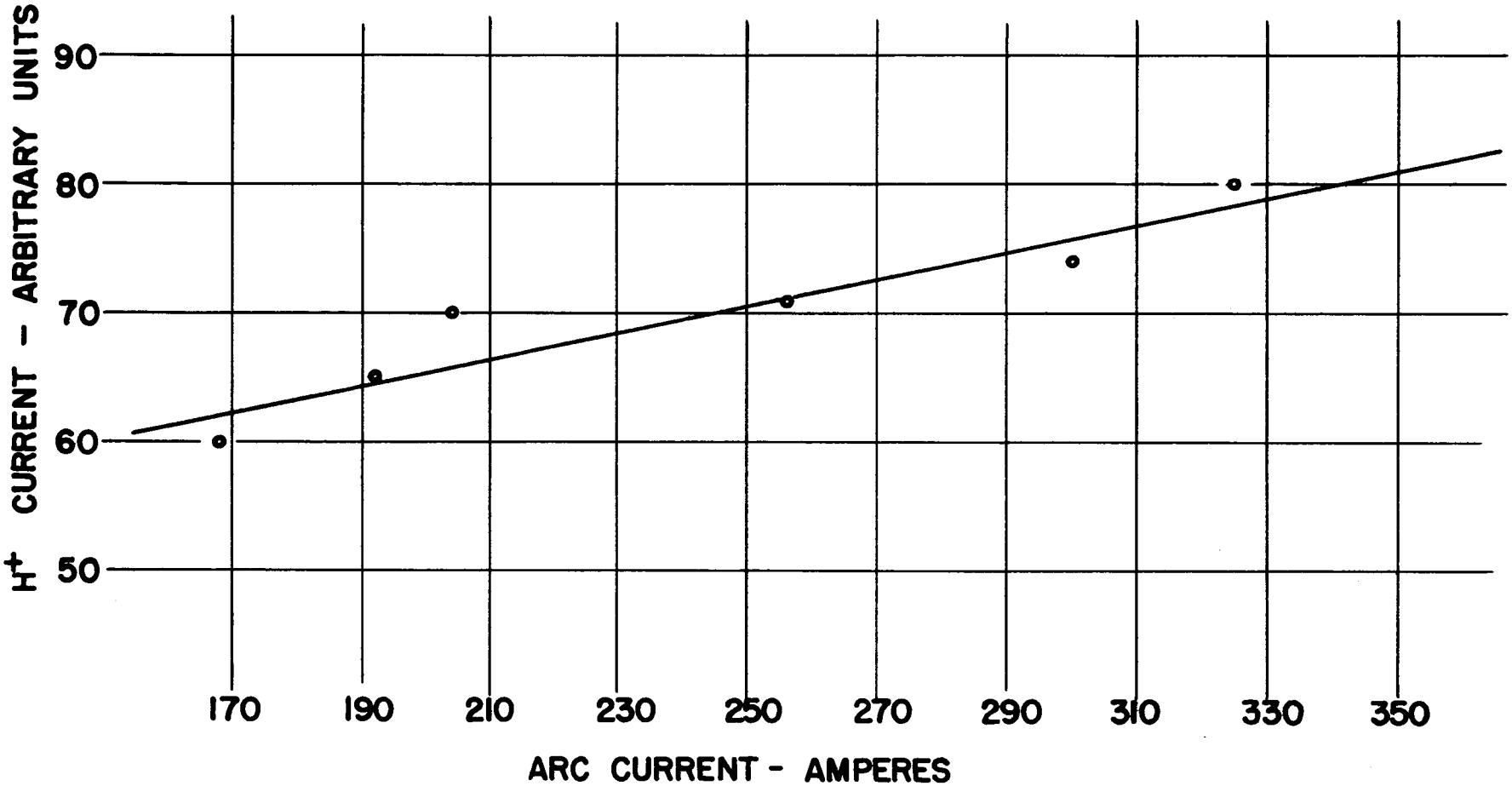

FIGURE 6 - H^+ CURRENT RESULTING FROM DISSOCIATION IN THE CARBON ARC AS A FUNCTION OF THE MEASURED ARC CURRENT.

BIBLIOGRAPHY

1. Barnett, C. F., Report on Sherwood Conference, Berkeley, California (1957).

2. Salpeter, E. E., Proc. Phys. Soc. A63, 1297 (1950).

3. Luce, J. S., Status Report on Carbon Arc, ORNL-2219.

4. Simon, A. and M. Rankin, Some Properties of a Steady State High-Energy Injection Device (DCX), ORNL-2354.

5. Stier, P. M. and C. F. Barnett, Phy. Rev. 103, 896 (1956).

6. Luce, J. S., Private Communication.