UNCLASSIFIED

OAK RIDGE NATIONAL LABORATORY LIBRARIES

3 4456 0546909 8

ORNL-2236
Progress
cy. 4

STABLE ISOTOPES DIVISION

SEMIANNUAL PROGRESS REPORT

FOR PERIOD ENDING NOVEMBER 30, 1956

LIBRARY LO

DO NOT TRANSFER TO ANOTHER PERSON

If you wish someone else to see this document, send in name with document and the library will arrange a loan.

OAK RIDGE NATIONAL LABORATORY
OPERATED BY
UNION CARBIDE NUCLEAR COMPANY
A Division of Union Carbide and Carbon Corporation
UCC
POST OFFICE BOX X · OAK RIDGE, TENNESSEE

UNCLASSIFIED

Printed in USA. Price 40 cents. Available from the

Office of Technical Services
U. S. Department of Commerce
Washington 25, D. C.

LEGAL NOTICE

This report was prepared as an account of Government sponsored work. Neither the United States, nor the Commission, nor any person acting on behalf of the Commission:

A. Makes any warranty or representation, express or implied, with respect to the accuracy, completeness, or usefulness of the information contained in this report, or that the use of any information, apparatus, method, or process disclosed in this report may not infringe privately owned rights; or

B. Assumes any liabilities with respect to the use of, or for damages resulting from the use of any information, apparatus, method, or process disclosed in this report.

As used in the above, "person acting on behalf of the Commission" includes any employee or contractor of the Commission to the extent that such employee or contractor prepares, handles or distributes, or provides access to, any information pursuant to his employment or contract with the Commission.

UNCLASSIFIED

ORNL-2236
Progress

Contract No. W-7405-eng-26

STABLE ISOTOPES DIVISION

SEMIANNUAL PROGRESS REPORT

For Period Ending November 30, 1956

C. P. Keim, Director
J. R. McNally, Jr., Associate Director

DATE ISSUED
JAN 28 1957

OAK RIDGE NATIONAL LABORATORY
Operated by
UNION CARBIDE NUCLEAR COMPANY
A Division of Union Carbide and Carbon Corporation
Post Office Box X
Oak Ridge, Tennessee

UNCLASSIFIED

OAK RIDGE NATIONAL LABORATORY LIBRARIES
3 4456 0546909 8

Reports previously issued in this series are as follows:

Y-497	July 1, 1949 to September 30, 1949
Y-550	October 1, 1949 to December 31, 1949
Y-586	January 1, 1950 to March 31, 1950
Y-636	April 1, 1950 to June 30, 1950
Y-685	July 1, 1950 to September 30, 1950
Y-723	October 1, 1950 to December 31, 1950
Y-765	January 1, 1951 to March 31, 1951
Y-797	April 1, 1951 to June 30, 1951
Y-821	July 1, 1951 to September 30, 1951
ORNL-1228	October 1, 1951 to December 31, 1951
ORNL-1298	January 1, 1952 to March 31, 1952
ORNL-1356	April 1, 1952 to June 30, 1952
ORNL-1434	July 1, 1952 to September 30, 1952
ORNL-1483	Period Ending December 31, 1952
ORNL-1563	Period Ending May 20, 1953
ORNL-1617	Period Ending November 20, 1953
ORNL-1732	Period Ending May 20, 1954
ORNL-1829	Period Ending November 20, 1954
ORNL-1908	Period Ending May 20, 1955
ORNL-2028	Period Ending November 20, 1955
ORNL-2114	Period Ending May 20, 1956

ORNL-2236
Progress

INTERNAL DISTRIBUTION

1. C. E. Center
2. Biology Library
3. Health Physics Library
4–6. Central Research Library
7. Reactor Experimental Engineering Library
8–12. Laboratory Records Department
13. Laboratory Records, ORNL R.C.
14. L. B. Emlet (K-25)
15. J. P. Murray (Y-12)
16. A. M. Weinberg
17. E. H. Taylor
18. E. D. Shipley
19. W. H. Jordan
20. M. L. Nelson
21. J. A. Swartout
22. S. C. Lind
23. F. L. Culler
24. A. H. Snell
25. A. Hollaender
26. M. T. Kelley
27. K. Z. Morgan
28. T. A. Lincoln
29. A. S. Householder
30. C. S. Harrill
31. C. E. Winters
32. D. W. Cardwell
33. E. M. King
34. D. D. Cowen
35. P. M. Reyling
36. C. P. Keim
37. S. Cromer
38. D. M. Lang (K-25)
39. R. S. Livingston
40. R. F. Hibbs (Y-12)
41. C. E. Normand
42. J. R. McNally, Jr.
43. C. R. Baldock
44. Boyd Weaver
45. G. C. Williams
46. R. W. Johnson
47. E. J. Murphy
48. P. S. Baker
49. M. J. Skinner
50. A. F. Rupp
51. J. L. Gabbard
52. R. A. Charpie
53. G. E. Boyd
54. J. E. Keeton
55. L. O. Love
56. H. R. Gwinn (Y-12)
57. A. E. Cameron
58. P. M. Griffin
59. J. R. Sites
60. J. A. Norris
61. A. O. C. Nier (consultant)
62. L. P. Smith (consultant)
63. J. C. Bailar, Jr. (consultant)
64. W. R. Brode (consultant)
65. R. R. Dickison
66. J. S. Drury
67. ORNL – Y-12 Technical Library, Document Reference Section

EXTERNAL DISTRIBUTION

68. R. F. Bacher, California Institute of Technology
69. Division of Research and Development, AEC, ORO
70–654. Given distribution as shown in TID-4500 (12th ed.) under Chemistry category

CONTENTS

ORGANIZATION CHART vii

PUBLICATIONS ix

MEETINGS AT WHICH PAPERS WERE PRESENTED ix

TRAVELING LECTURES x

PAPERS CONCERNING USAGE OF ENRICHED ISOTOPES x

STABLE ISOTOPE SEPARATION AND CALUTRON OPERATIONS 1
- Introduction 1
- Calutron Operations 1
  - Chlorine, Series HY-XBX 1
  - Lead, Series HZ-XAX 1
  - Silicon, Series IA-XAX 2
  - Dysprosium, Series IB-XBX 3
  - Antimony, Series IC-XBX 4
  - Calcium, Series ID-XAX 4
  - Boron, Series IE-XBX 5
  - Boron, Series IF-XBX 6
  - Lithium, Series IG-XAX 7
  - Palladium, Series IH-XBX 7
  - Lithium, Series II-XAX 8
  - Tin, Series IJ-XAX 8
  - Platinum, Series IK-XBX 8
- Preparation of Calutron Charge Materials 9
- Development and Process Improvement 10

ISOTOPE CHEMISTRY AND UTILIZATION 11
- Introduction 11
- Chemical Refinement of Isotopes 11
  - Silicon 11
  - Sulfur 11
  - Dysprosium 12
  - Barium 12
  - Silicon Reprocessing 12
- Target Preparation and Special Services 13
  - Target Preparation 13
  - Conversions and Special Procedures 14
  - Cooperative Calutron-Cyclotron Program 14

RARE-EARTH CHEMISTRY 15
- Fundamental Data 15
- Separation of Rare Earths 17
  - Liquid-Liquid Extraction 17
  - Liquid-Liquid Exchange 17

MASS SPECTROMETRY AND RELATED TECHNIQUES 19
- Introduction 19
- Collison-Induced Dissociations in the Mass Spectrum of Methane 19
- Metastable and Collision-Induced Dissociations in the Mass Spectrum of Acetylene 21

Mass Spectrometer Source Studies 24
Single-Stage Research Spectrometer RS-1 28
Two-Stage Mass Spectrometer RS-2 29

APPLIED MASS SPECTROMETRY 30
Introduction 30
Stable Isotope Analyses 30
Résumé of Mass Spectrometry Analyses 30
Analysis for Contaminants in Very Pure Argon 31

SPECTROSCOPY RESEARCH LABORATORY 32
Introduction 32
Molecular Spectroscopy 32
Infrared Spectrum of NT_3 32
Vibrational Spectra of $Ca(OH)_2$ 33
The Infrared Spectra of Cyanic Acid and Thiocyanic Acid 33
Infrared Spectra of the Deutero-Substituted Ethyl Alcohols 33
Atomic Spectroscopy 34
Spectrum of Singly Ionized Plutonium, Pu(II) 34
Ratios of the Nuclear Moments of U^{233} and U^{235} 35
Zeeman Spectroscopy 37
Applied Spectroscopy 37
Analytical Summary 37
Rare-Earth Spectrochemical Development 37
X-Ray Analytical Development 37
Optical Development 38
Electronic Development 38
X-Ray Spectroscopy 38
Germanium Internal Bremsstrahlung 38
X-Ray Diffraction 38

STABLE ISOTOPE DISTRIBUTION 40

STABLE ISOTOPES DIVISION ORGANIZATION CHART

NOVEMBER 30, 1956

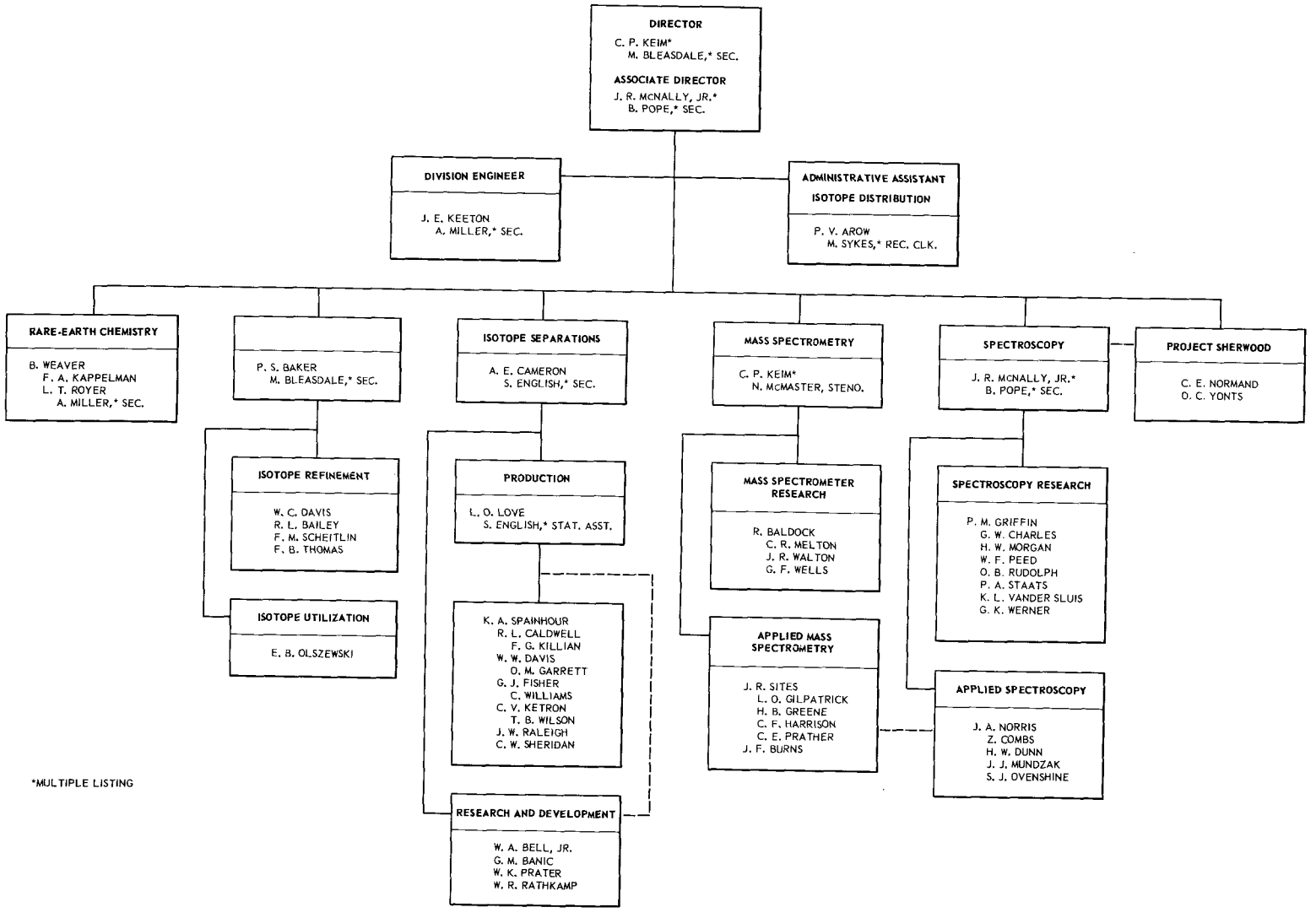

*MULTIPLE LISTING

PUBLICATIONS

C. E. Melton, L. O. Gilpatrick, Russell Baldock, and R. M. Healy, "Improved Techniques for the Isotopic Determination of Boron on the Mass Spectrometer," *Anal. Chem.* **28**, 1849 (1956).

H. E. Walchi and T. J. Rowland, "Nuclear Magnetic Resonance Measurements of the Isotopes Barium-135 and Barium-137," *Phys. Rev.* **102**, 1334 (1956).

H. W. Morgan, P. A. Staats, and J. H. Goldstein, "Vibrational Spectra of Formyl Fluoride and *d*-Formyl Fluoride," *J. Chem. Phys.* **25**, 337 (1956).

J. H. Wise and K. L. Vander Sluis, "Preliminary Report on the Isotopic Structure of the Cadmium Primary Standard of Wavelength," *J. Opt. Soc. Amer.* **46**, 587 (1956).

K. L. Vander Sluis, "General Formulas for Least Squares Reduction of Zeeman Data," *J. Opt. Soc. Amer.* **46**, 605 (1956).

P. A. Staats, H. W. Morgan, and J. H. Goldstein, "The Infrared Spectrum of TCN," *J. Chem. Phys.* **25**, 582 (1956).

J. R. McNally, Jr., *A Survey of Plutonium Spectrum Data*, ORNL-2154 (Aug. 28, 1956).

H. W. Dunn, *X-Ray Diffraction Data for Some Uranium Compounds*, ORNL-2092 (Aug. 2, 1956).

MEETINGS AT WHICH PAPERS WERE PRESENTED

ASTM Committee E-14 on Mass Spectrometry, Cincinnati, Ohio, May 27–June 1, 1956

A. E. Cameron, "Recent Developments in Mass Spectrometry in Europe."

Russell Baldock, "Sources for the Analysis of Solids."

H. M. Rosenstock and C. E. Melton, "Collision-Induced Dissociations and Metastable Transitions in Mass Spectra."

H. M. Rosenstock, L. K. Brice, Jr., and J. R. Walton, "Mass Spectra of the Vapor State of Silver Halides."

American Nuclear Society, Chicago, Illinois, June 6–8, 1956

P. S. Baker, F. R. Duncan, and L. O. Love, "Cyclotron Targets Using Enriched Stable Isotopes."

Russell Baldock, "Chemical Applications of Mass Spectrometry."

Ohio State Symposium on Molecular Structure and Spectroscopy, Ohio State University, Columbus, June 11–15, 1956

P. A. Staats, H. W. Morgan, and J. H. Goldstein, "Infrared Spectra of T_2O and TCN."

Gordon Research Conference on Physics and Chemistry of Stable Isotopes, Meriden, New Hampshire, July 2–6, 1956

A. E. Cameron, "Distribution of Stable Isotopes in Nature."

Joint Commission for Spectroscopy Meeting, Ohio State University, Columbus, June 11–15, 1956

J. R. McNally, Jr., and P. M. Griffin, "Preliminary Classification of the Spectrum of Singly-Ionized Plutonium."

Fifth Annual Symposium of Industrial Applications of X-Ray Analysis, University of Denver, Denver, Colorado, August 8–10, 1956

W. F. Peed and H. W. Dunn, "Monochromatic X-Ray Absorption as a Method of Analysis for Uranium in Solution."

AEC Ceramics Information Meeting, Oak Ridge, Tennessee, October 3, 1956

Boyd Weaver, "Some Chemical Considerations Concerning Rare Earths as Ceramics."

American Chemical Society, Midwestern Regional Meeting, Ames, Iowa, November 9, 1956

Boyd Weaver, "Extractive Behavior of Some Rare Earths in Tributyl Phosphate-Nitric Acid Systems."

Westinghouse Spectroscopy Symposium, Kansas City, Missouri, November 15–16, 1956

P. M. Griffin, "Principles and Applications of High Resolution Spectroscopy."

Tennessee Academy of Science, Murfreesboro, Tennessee, November 30, 1956

W. C. Davis, F. B. Thomas, R. L. Bailey, F. M. Scheitlin, and P. S. Baker, "Purification of Salts by Precipitation with Concentrated Nitric Acid."

P. S. Baker, W. C. Davis, R. L. Bailey, F. M. Scheitlin, and F. B. Thomas, "Use of the 'Common-Ion' Effect to Separate Lithium Chloride from Barium Chloride."

TRAVELING LECTURES

Russell Baldock, *Research and Applications in Mass Spectrometry*, Alabama Polytechnic Institute, Auburn, November 15, 1956.

A. E. Cameron, *Geological Age Determinations by Isotopic Measurements*, Virginia Polytechnic Institute, Blacksburg, November 27, 1956.

PAPERS CONCERNING USAGE OF ENRICHED ISOTOPES

PUBLICATIONS	ISOTOPES USED
J. D. Knight, J. P. Mize, J. W. Starner, and J. W. Barnes (Los Alamos Scientific Laboratory), "Radiations of Te-127 and Te-127*m*," *Phys. Rev.* **102**, 1592–1597 (1956).	Te-126
R. M. Steffen (Purdue University), "Influence of the Time-Dependent Quadrupole Interaction on the Directional Correlation of the Cd-111 Gamma Rays," *Phys. Rev.* **103**, 116–125 (1956).	Ag-109
J. P. Schiffer, C. R. Gossett, G. C. Phillips, and T. E. Young (The Rice Institute), "Inelastic Scattering of Protons from Cl-35 and Cl-37," *Phys. Rev.* **103**, 134–135 (1956).	Cl-35, -37
B. H. Ketelle, H. Thomas, and A. R. Brosi (Oak Ridge National Laboratory), "Decay of the Cerium-139 Isomers," *Phys. Rev.* **103**, 190–195 (1956).	Ce-138
B. Senitzky and I. I. Rabi (Columbia University), "Hyperfine Structure of Rb-85, -87 in the 5P State," *Phys. Rev.* **103**, 315–321 (1956).	Rb-87
F. Ajzenberg-Selove, G. D. Johnson, and A. Rubin (Boston University) and M. Mazari (Massachusetts Institute of Technology), "Neutrons from the Proton Bombardment of B-11," *Phys. Rev.* **103**, 356–357 (1956).	B-11
G. L. Griffith (Westinghouse Research Laboratories), "First Excited States in Zr-92 and Zr-94," *Phys. Rev.* **103**, 643–645 (1956).	Zr-92, -94
F. L. Ribe (Los Alamos Scientific Laboratory), "Li-6(n,α)H^3 Cross Section as a Function of Neutron Energy," *Phys. Rev.* **103**, 741–748 (1956).	Li-6

PUBLICATIONS	ISOTOPES USED
R. H. Herber, T. T. Sugihara, C. D. Coryell, and W. E. Bennett (Massachusetts Institute of Technology) and J. R. Huizenga (Argonne National Laboratory), "Probable Absence of K Capture in the Decay of Lead-205," *Phys. Rev.* **103**, 955–956 (1956).	Pb-204
G. W. Wetherill (Carnegie Institution of Washington), G. J. Wasserburg (University of Chicago), L. T. Aldrich and G. R. Tilton (Carnegie Institution of Washington) and R. J. Hayden (Argonne National Laboratory), "Decay Constants of K-40 as Determined by the Radiogenic Argon Content of Potassium Minerals," *Phys. Rev.* **103**, 987–989 (1956).	K-40; Pb isotopes
L. T. Aldrich, G. W. Wetherill, G. R. Tilton, and G. L. Davis (Carnegie Institution of Washington), "Half-Life of Rb-87," *Phys. Rev.* **103**, 1045–1047 (1956).	Pb-206, -207; Sr-87; Rb-87
G. Goldring and G. T. Paulissen (Massachusetts Institute of Technology), "Ratios of Transition Probabilities Between Rotational States in Odd-A Nuclei," *Phys. Rev.* **103**, 1314–1320 (1956).	Re-185, -187; Hf-177, -179
P. M. Windham, C. R. Gossett, G. C. Phillips, and J. P. Schiffer (The Rice Institute), "Inelastic Scattering of Protons from Isotopes of Sc, Mn, Fe, Ni, and Cu," *Phys. Rev.* **103**, 1321–1326 (1956).	Fe-54; Ni-58, -60; Cu-63
V. S. Dubey, C. E. Mandeville, and M. A. Rothman (Bartol Research Foundation of the Franklin Institute), "Decay of Eu-155, Sm-153, Sn-125, and Br-82," *Phys. Rev.* **103**, 1430–1441 (1956).	Sn-124
H. J. Watters (Massachusetts Institute of Technology), "Elastic and Inelastic Scattering of 31.5-Mev Alpha Particles by Light Nuclei," *Phys. Rev.* **103**, 1763–1772 (1956).	Li-6
R. H. Davis, A. S. Divatia, D. A. Lind, and R. D. Moffat (University of Wisconsin), "Coulomb Excitation of Elements of Medium and Heavy Mass," *Phys. Rev.* **103**, 1801–1811 (1956).	Hg-199
J. G. Likely and F. P. Brady (Princeton University), "Pickup Behavior in Li-6(p,He^3)He-4 and F^{19}(p,α)O-16 at 18 Mev," *Phys. Rev.* **104**, 118–123 (1956).	Li-6
J. M. Cork, M. K. Brice, L. C. Schmid, and R. G. Helmer (University of Michigan), "Nuclear Levels in Dy-161," *Phys. Rev.* **104**, 481–483 (1956).	Gd-160
R. R. Hake, D. E. Mapother, and D. L. Decker (University of Illinois), "Isotope Effect in Superconducting Lead," *Phys. Rev.* **104**, 549–550 (1956).	Pb all isotopes
V. R. Potnis (Bartol Research Foundation of the Franklin Institute), "Nuclear Energy Levels of Os-188," *Phys. Rev.* **104**, 722–727 (1956).	Re-188
E. N. Hatch, F. Boehm, P. Marmier, and J. W. DuMond (California Institute of Technology), "Rotational and Intrinsic Levels in Tm-169 and Lu-175," *Phys. Rev.* **104**, 745–752 (1956).	Hf-174
L. J. Lidofsky and V. K. Fischer (Columbia University), "Isobaric Level Structure for A = 47," *Phys. Rev.* **104**, 759–763 (1956).	Ca-46
G. M. Temmer and N. P. Heydenburg (Carnegie Institution of Washington), "Coulomb Excitation of Medium-Weight Nuclei," *Phys. Rev.* **104**, 967–980 (1956).	52 isotopes

PUBLICATIONS	ISOTOPES USED
N. P. Heydenburg and G. M. Temmer (Carnegie Institution of Washington), "Coulomb Excitation and Cascade Decay of Rotational States in Odd-Mass Nuclei," *Phys. Rev.* **104**, 981–989 (1956).	Eu, Gd, Hf, Ta isotopes
D. A. Dahlberg and L. M. Bollinger (Argonne National Laboratory), "Neutron Cross Sections of Zinc," *Phys. Rev.* **104**, 1006–1008 (1956).	Zn all isotopes
F. B. Simpson and R. G. Fluharty (Phillips Petroleum Company), "Total Neutron Cross Sections and Resonance Parameters in Cd," *Bull. Am. Phys. Soc.* (Ser. II) 1(5), 247 (1956).	Cd-111
H. C. Shaw, H. E. Conzett, R. J. Slobodrian, and R. G. Summersgill (University of California Radiation Laboratory), "Elastic Scattering of Protons at 12 Mev," *Bull. Am. Phys. Soc.* (Ser. II) 1(5), 253 (1956).	Pb-208
H. B. Willard, J. K. Bair, H. O. Cohn, and J. D. Kington (Oak Ridge National Laboratory), "Si-28($p,p'\gamma$)Si-28 Reaction," *Bull. Am. Phys. Soc.* (Ser. II) 1(5), 264 (1956).	Si-28
H. G. Graetzer and A. B. Robbins (Yale University), "Alpha-Particle Bombardment of Magnesium Isotopes," *Bull. Am. Phys. Soc.* (Ser. II) 1(6), 280 (1956).	Mg-24, -25, -26
A. J. Elwyn and F. B. Shull (Washington University), "Angular Distributions of Protons from $Cr^{52,53}(d,p)Cr^{53,54}$," *Bull. Am. Phys. Soc.* (Ser. II) 1(6), 281 (1956).	Cr-52, -53
D. R. Speck (University of California, Berkeley), "Magnetic and Quadrupole Moments of Hf^{177} and Hf^{179}," *Bull. Am. Phys. Soc.* (Ser. II) 1(6), 282 (1956).	Hf-177, -179
J. M. Cork, M. K. Brice, L. C. Schmid, and R. G. Helmer (University of Michigan), "Radioactive Decay of Terbium-161," *Bull. Am. Phys. Soc.* (Ser. II) 1(6), 297 (1956).	Gd-160
J. A. Harvey and R. C. Block (Oak Ridge National Laboratory), "Neutron Resonance Parameters of Eu-151 and Eu-153," *Bull. Am. Phys. Soc.* (Ser. II) 1(7), 347 (1956).	Eu-151, -153
R. Barloutaud, T. Grjebine, and M. Riou (Centre National de la Recherche Scientifique, France), "Coulomb Excitation of Mercury Isotopes," *Compt. rend.* **242**, 1284–1287 (1956).	Hg-198, -200, -202, -204
J. A. Harvey (Massachusetts Institute of Technology), "Energy Levels in Lead and Bismuth and Nuclear Shell Structure," *Can. J. Phys.* **31**, 278 (1953).	Pb-206, -207, -208
A. Michalowicz and M. Lederer, "Presence of Co and Mn in Fe-55 Produced in the Pile," *J. phys. radium* **13**, 669 (1952).	Fe-54

STABLE ISOTOPES DIVISION SEMIANNUAL PROGRESS REPORT

STABLE ISOTOPE SEPARATION AND CALUTRON OPERATIONS

A. E. Cameron

INTRODUCTION

Three special calutron separations have been made during the past six months in addition to those contributing to replenishment of the inventory. High-purity Si^{28} was collected in a single-pass operation, and very-high-purity Ca^{40} was similarly produced. The isotopes of boron and of lithium were separated, and a very high purity was attained by a second-stage operation in which enriched charge material was used.

The inventory of chlorine, lead, antimony, and palladium isotopes has been replenished. Isotopes of dysprosium were separated and placed in inventory for the first time. An experimental run designed to evaluate vanadium metal charge in the high-temperature source has been completed. At the end of this report period, platinum and tin were being processed. The estimated total weight of the 46 separated isotopes produced by processing 11 elements is 592 g.

Imminent failure of the recirculated cooling-water system forced a shutdown of all building operations for six days late in June. During this period the cooling tower was cleaned and repaired for the first time in eight years. The stoppage of production gave an opportunity for the commutator of the XBX motor generator to be dressed and for the XAX tanks, vacuum manifolds, and diffusion pumps to be cleaned.

The new motor generator in Building 9736 has been enclosed, and the installation has been connected to the XAX magnet. It is now possible to secure a higher magnetic field than before, and the stability of the field is greatly improved. The smoother operation resulting from better field regulation will produce an over-all increase in both the output and purity of separated isotopes.

CALUTRON OPERATIONS

L. O. Love	W. W. Davis
W. A. Bell, Jr.	G. J. Fisher
G. M. Banic, Jr.	O. M. Garrett
W. K. Prater	F. G. Killian
K. A. Spainhour	J. W. Raleigh
C. V. Ketron	C. Williams
R. L. Caldwell	T. B. Wilson

Chlorine, Series HY-XBX[1]

The separation of chlorine isotopes was completed on May 24, 1956. Operating characteristics were discussed in the report[2] of the last six-months' period. A total of 1580 separator-hours was used in collecting the following metered amounts of chlorine isotopes:

Isotope	Amount (g)	Isotopic Purity (%)
Cl^{35}	21.26	97.5
Cl^{37}	6.74	67.0
Total	28.00	

Ion-reception time totaled 1015 hr, with efficiency of the process being 2.9%. (Process efficiency is represented by that percentage of charge material which was metered as separated isotopes.)

Lead, Series HZ-XAX

The separation of lead was started on April 26, 1956, and was completed on May 24, 1956. An increase in isotopic purity over that attained in previous separations was desired. Even in 48-in.-radius equipment the separation between

[1]The suffix XBX or XAX indicates that separation was performed in equipment having a 24-in. or 48-in. collection radius, respectively.

[2]L. O. Love *et al.*, *Stable Isotopes Semiann. Prog. Rep. May 20, 1956*, ORNL-2114, p 26.

adjacent ion beams at the collector is only 0.245 in. In previous separations, isotope collectors had rejected either the 207 ion beam or both the 206 and 208 ion beams because of space limitations. In this collection an attempt was made to receive all beams by using a sectionalized copper pocket to collect masses 206, 207, and 208. Erosion of the separators between 206 and 207 and between 207 and 208 was so severe that holes were cut through the copper. This erosion plus the possible contamination by material rejected from other sections of the pocket, as indicated in Fig. 1, made the use of such a receiver quite questionable. Assays of separated material, Table 1, indicate that product purity did not decrease materially and that the increased percentage of total beam collected would warrant the use of this receiver in future separations.

A total of 1327 separator-hours was devoted to the series. Ion reception was maintained for 906 hr at an average rate of 11.3 ma, the maximum being 24.0 ma. Efficiency of the process was 7.4%. The following metered amounts of isotopic material were collected:

Isotope	Amount (g)
Pb^{204}	2.44
Pb^{206}	18.5
Pb^{207}	19.7
Pb^{208}	38.8
Total	79.4

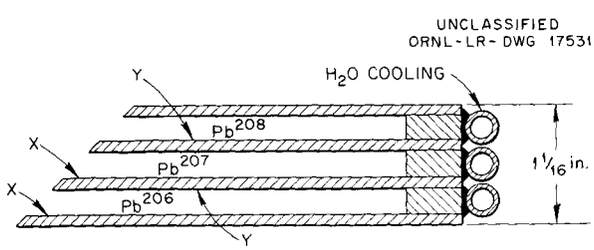

X- POINT OF CONTAMINATION BY MATERIAL DROPPING OFF DEFINING FACEPLATE AFTER BEING REJECTED FROM POCKETS ABOVE

Y- POINT OF MOST SEVERE BEAM EROSION

Fig. 1. Cross Section of Copper Pocket Used to Receive Pb^{206}, Pb^{207}, Pb^{208}.

Silicon, Series IA-XAX

This separation was started on May 24, 1956, to produce 99.9% Si^{28} from normal (92.27% Si^{28}) $SiCl_4$ charge material in a single-pass operation. The initial 13 runs of the series were made with the Si^{28} ion beam collected in either purified graphite or in water-cooled copper collectors. Retention of Si^{28} in each was approximately 75%; however, the assay of material collected on copper was 99.61% Si^{28} in comparison with 99.90% for that collected on graphite. This difference in purity suggested that the cold copper was, in some way, trapping un-ionized silicon. Subsequent runs were made in which the ion beam first passed through a conventional graphite beam-defining plate and then through two copper plates each cooled with alcohol at –50°C. The beam impinged on the inner surface of a cylindrical piece of graphite contained in a water-cooled copper pocket. This faceplate and collector arrangement is shown in Fig. 2. Product purity of collected material was 99.9% Si^{28}, but retention upon this graphite insert was 20% instead of the 75% encountered with the conventional graphite receiving pocket. All subsequent runs were made with the Si^{28} collected in standard graphite pockets purified in the

TABLE 1. COMPARISON OF ISOTOPIC PURITY OF LEAD SAMPLES COLLECTED IN VARIOUS TYPES OF RECEIVERS

Isotopes Collected	Isotopic Purity of Collected Sample (%)			
	Pb^{204}	Pb^{206}	Pb^{207}	Pb^{208}
All	40.04	79.80	60.06	95.42
Pb^{204} and Pb^{207}	38.48		66.54	
Pb^{204}, Pb^{206}, and Pb^{208}	36.89	83.12		95.90

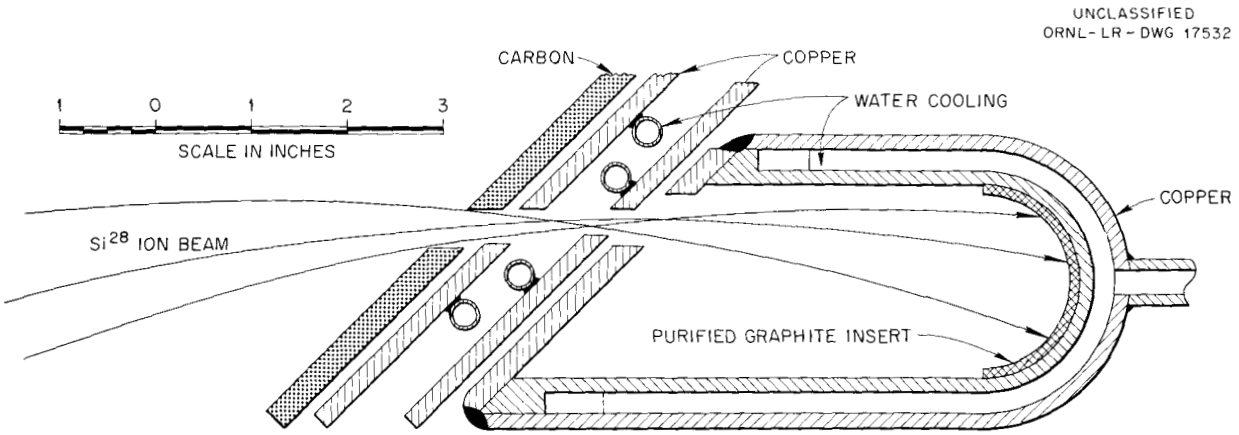

Fig. 2. Section of Si^{28} Receiver Pocket and Faceplate Assembly.

carbon tube furnace. (Contaminants, such as silicon and iron, in graphite must be reduced by high-temperature chlorination before the graphite can be used for collecting the isotopes of these elements; otherwise the purity of the isotope is altered greatly.)

Separator time for the series totaled 2352 hr with ion reception being maintained for 1638 hr. Peak separation rate was 18.8 ma, the average per reception-hour being 11.4 ma. Efficiency of the separation process was 2.4%. The following metered amounts of isotopic material were separated:

Isotope	Amount (g)
Si^{28}	18.3
Si^{29}	0.82
Si^{30}	0.47
Total	19.6

Dysprosium, Series IB-XBX

This, the first calutron separation of dysprosium isotopes, was started on June 15, 1956. The starting material was two batches of Dy_2O_3 separated from other rare earths by chemists in this division working under the direction of Boyd Weaver. Spectrographic analysis showed that 293 g of the material was terbium-free but that it contained approximately 5% holmium. The remaining 490 g of Dy_2O_3 contained only 2.2% holmium, but the terbium content was increased to 2.1%. Neither holmium nor terbium is isobaric with dysprosium.

These two batches of oxide were converted to $DyCl_3$, and isotope separation was performed, with the samples collected in purified graphite. The proximity of one ion beam to the next (0.158 in.) made mandatory the omission of certain collector pockets. Thus ions produced from terbium-free charge were collected in a receiver which rejected masses 160, 162, and 164, while masses 158, 161, and 163 were rejected during the use of charge having low holmium content. As operations progressed and recycle became necessary, the two charges were combined.

The use of $DyCl_3$ as charge required a high-temperature ion source and the use of a graphite charge container. Operation was accompanied by considerable high-voltage sparking and erosion of the ion-exit slit. A moderate amount of material deposited on the inner periphery of the collimating slot and in the interior of the arc chamber. Focus of the ion beams at the receiver was very poor. None of the beams curved the normal amount, and, in addition to being nearly straight, they were thick at the ends. This effect, plus frequent shorting of one pocket to another, made correct monitoring of the beams extremely difficult. To enhance purity under these conditions, the ion-exit slit length was reduced from 6 in. to 3 in., and the size of the beam-defining slot in the receiver faceplate was reduced from $\frac{1}{8}$ in. to $\frac{1}{16}$ in. in width. These changes reduced by 60% the ion current actually received. Run terminations were caused primarily by failure of the arc filament after approximately 19 hr of ion production.

In this series 1129 separator-hours was required to separate a metered 19.4 g of material. Ion reception was maintained for 578 hr at an average received rate (50% of total) of 5.5 ma. Dysprosium was consumed at a rate of 1.1 g per hour of ion production, with efficiency of the process being 3.0%. The following metered amounts of isotopic material were collected:

Isotope	Amount (g)
Dy^{156}	0.083
Dy^{158}	0.243
Dy^{160}	0.502
Dy^{161}	3.80
Dy^{162}	4.74
Dy^{163}	4.79
Dy^{164}	5.26
Total	19.4

Antimony, Series IC-XBX

Separation of the isotopes of antimony was started on July 6, 1956. Both metallic antimony and Sb_2O_3 were used satisfactorily as charge materials. Metallic antimony contained in a graphite bottle was ionized in the M-14 source having a $\frac{3}{16} \times 5\frac{1}{4}$ in. ion-exit slit. Maximum output achieved was 65 ma and process efficiency was 6.3%. In comparison, the Sb_2O_3 was processed in the M-12 ion source with a $\frac{3}{16} \times 7$ in. ion-exit slit. Peak output was 61 ma with an efficiency of 9.3%.

Ion beams passed through $\frac{1}{8}$-in. defining slots placed in front of the receiving pockets. Because of the difficult task of recovering antimony from the copper pockets used in previous separations, an attempt was made to collect the separated material in graphite pockets. Retention of material was the lowest ever encountered – almost zero. Further collection was on copper or on aluminum turnings contained in aluminum or in carbon pockets. The ion beam melted the aluminum turnings contained in graphite pockets. This globule, on solidifying, caused the graphite to crack, and useful receiver life was limited to one run. The aluminum pocket did not erode badly; however, an area of approximately 1 in.^{2} consistently melted out of the leading edge of the pocket. In view of these difficulties, retention of material in these collectors is expected to be approximately 50%.

A total of 1533 separator-hours was devoted to this separation. Ion reception was maintained for 1129 hr at an average rate of 32.5 ma, the peak rate being 65 ma. Maximum reception time in any one run was 91 hr. The following metered amounts of isotopic material were separated:

Isotope	Amount (g)
Sb^{121}	97.5
Sb^{123}	69.2
Total	166.7

Calcium, Series ID-XAX

This separation of the isotopes of calcium (Ca^{40} and Ca^{48} only, the others being rejected) was started on July 13, 1956, to produce highly enriched samples from normal calcium feed material without resorting to second-pass operation. Metallic calcium charge was ionized in the M-12 source, the ion-exit slit length being reduced from 7 in. to 4 in. in order to obtain a higher degree of beam resolution. Sparking in the electrode system was unavoidable even when stainless steel was substituted for graphite for fabrication of ion-exit slits, arc chambers, and accelerating electrodes. The sparking was so severe that drain fins and ground shields above the fins were burned, Lavite shields protecting the high-voltage insulators were melted, and stainless steel clamps positioning the arc chamber practically disappeared. Calcium deposited on the ion-exit slit and electrodes. The net result of such operation was that beam resolution was frequently compromised in order that accelerating voltages could be maintained. The use of $CaCl_2$ and CaI_2 as charges did little, if anything, to improve operating conditions.

The ion beams of Ca^{40} and Ca^{48} were collected after they were passed through three defining slots in the receiver faceplates. This receiver arrangement is shown in Fig. 3. It will be noted that in order to attain the 9-in. separation necessary between the Ca^{40} and Ca^{48} collectors they were assembled on separate support barrels, which permitted individual adjustment of each pocket as well as adjustment in the separation between pockets.

The Ca^{40} beam was collected initially in the same general pocket arrangement as was indicated

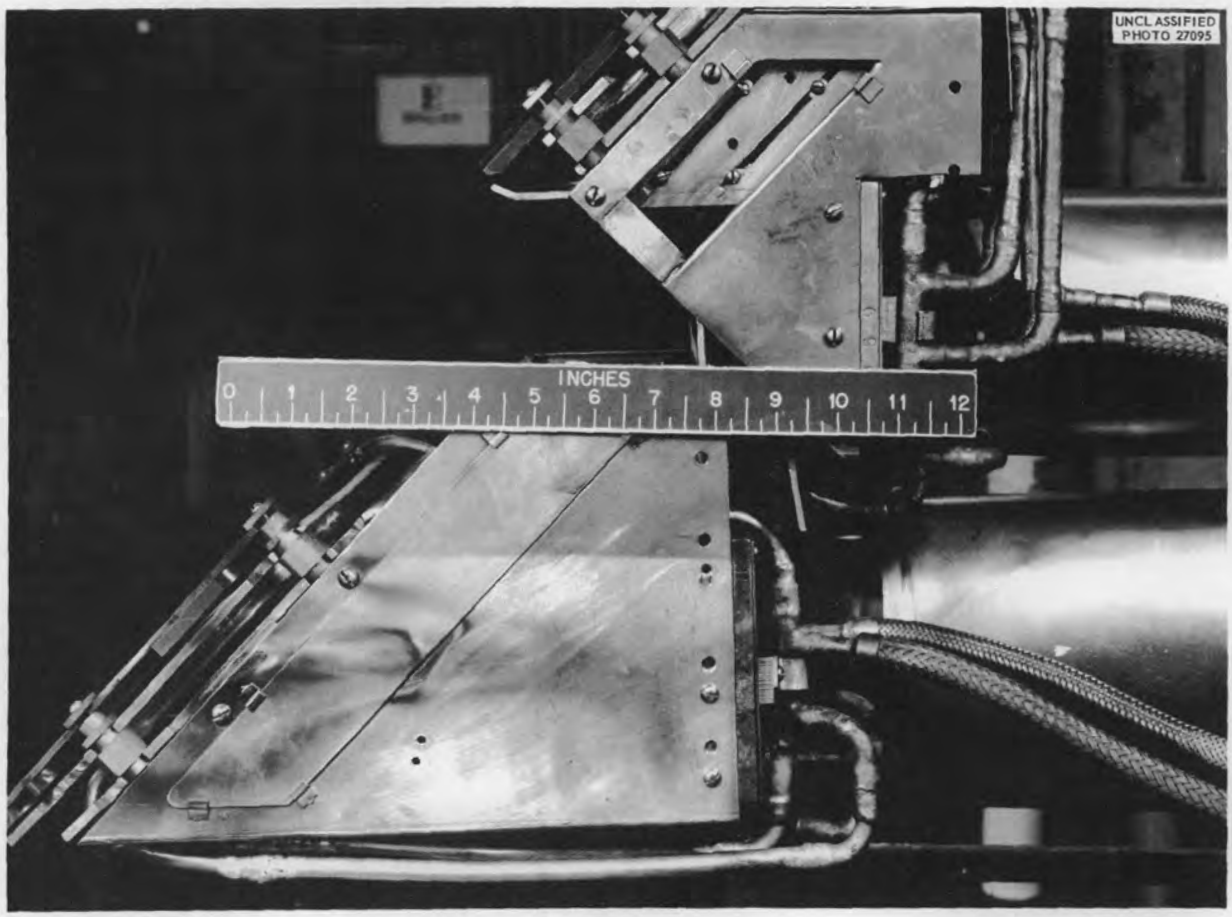

Fig. 3. Side View of Calcium Receiver.

for Si^{28} collection in Fig. 2. Again, the use of the semicylindrical graphite insert contained in a water-cooled copper pocket was discontinued when the retention of material on the insert was found to be only 22%. In comparison, retention in the conventional $\frac{5}{8}$-in.-high, $3\frac{1}{2}$-in.-deep graphite pocket used to replace the above arrangement was 85% of the impinging Ca^{40}.

A total of 1878 separator-hours was devoted to this series. Ion reception was maintained during 1153 hr at an average rate of 7.2 ma, the peak achieved being 24.5 ma. Calcium charge feed was consumed at the rate of 0.5 g per hour of ion reception. Process efficiency was 2.0%. The following metered amounts of calcium isotopes were separated:

Isotope	Amount (g)
Ca^{40}	12.34
Ca^{48}	0.025
Total	12.36

An isotopic purity of 99.995% Ca^{40} was attained in 8.2 g of the separated material, the remainder having a purity of 99.90%. Fifteen milligrams of Ca^{48} attained a purity of 80%.

Boron, Series IE-XBX

This separation was designed to produce a small sample of high-purity B^{10} from $BF_3 \cdot CaF_2$ charge containing enriched B^{10}. Chemical recycling of the charge was necessary. Ionization of the BF_3 was performed in the M-12 ion source modified so that the charge oven temperature could be accurately controlled in the 100 to 200°C range. The arc chamber consisted of a $\frac{5}{16} \times \frac{1}{2}$ in. channel, the ions emerging through an exit slit $\frac{3}{16}$ in. wide and 4 in. long. In operation, temperature control was quite critical, some difficulty being experienced in keeping the charge from overheating. Normally the B^{10} ion beam was well resolved but concentrated heavily in the center of the receiving pocket. To prevent undue

heating at the point of beam impact in the pocket, ion output was limited to 15 ma.

As designed, the receiver collects B^{10} only, the B^{11} striking a water-cooled copper plate as indicated in Fig. 4. Three beam-defining slots were used to collimate the neutral material which could enter the B^{10} collector. The slot sizes, varying from $\frac{7}{16}$ to $\frac{1}{4}$ in., were chosen to give optimum ion-to-neutral-particle ratio. Collector pocket material was graphite purified in the carbon tube furnace.

A total of 1035 separator-hours was devoted to the series. Ion reception was maintained during 772 hr at an average rate of 13.2 ma. The metered amount of B^{10} separated was 3.79 g, the purity of which has not been determined.

Boron, Series IF-XBX

This was a high-purity B^{11} separation starting with $BF_3 \cdot CaF_2$ charge containing boron enriched in B^{11}. The ion source and operation were identical to those discussed above ("Boron, Series IE-XBX"). The receiver collected only B^{11}, the B^{10} striking obliquely on the water-cooled copper plate positioned below the B^{11} beam-defining slots as shown in Fig. 5. The separated material was collected in a $\frac{5}{8}$-in.-high, $3\frac{1}{2}$-in.-deep graphite pocket.

The series required the use of 1265 separator-hours, during which time ion reception was maintained for 983 hr at an average rate of 16.3 ma. A metered amount of 6.57 g of B^{11} was collected; the material has not yet been assayed.

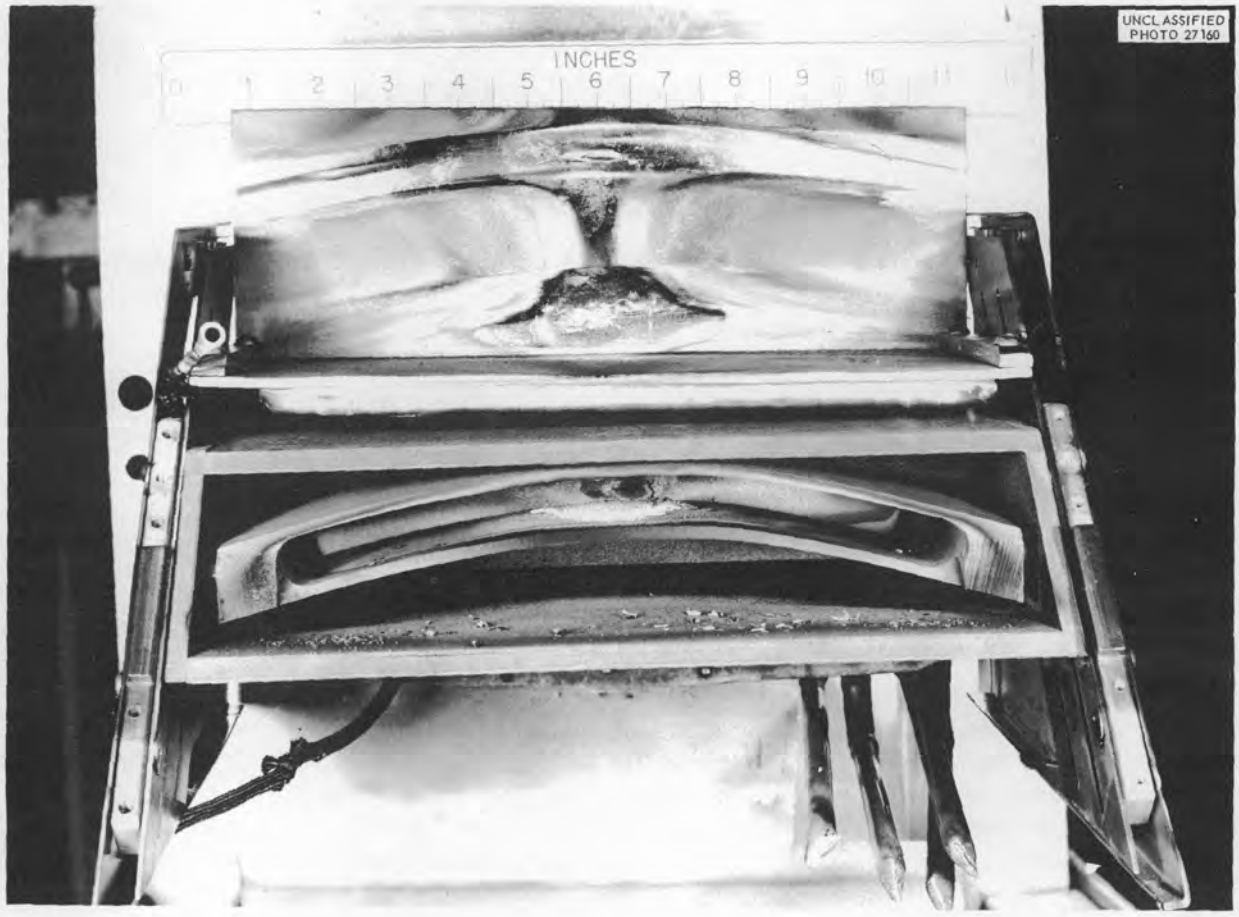

Fig. 4. B^{10} Receiver Assembly with Beam-Defining Faceplates Removed.

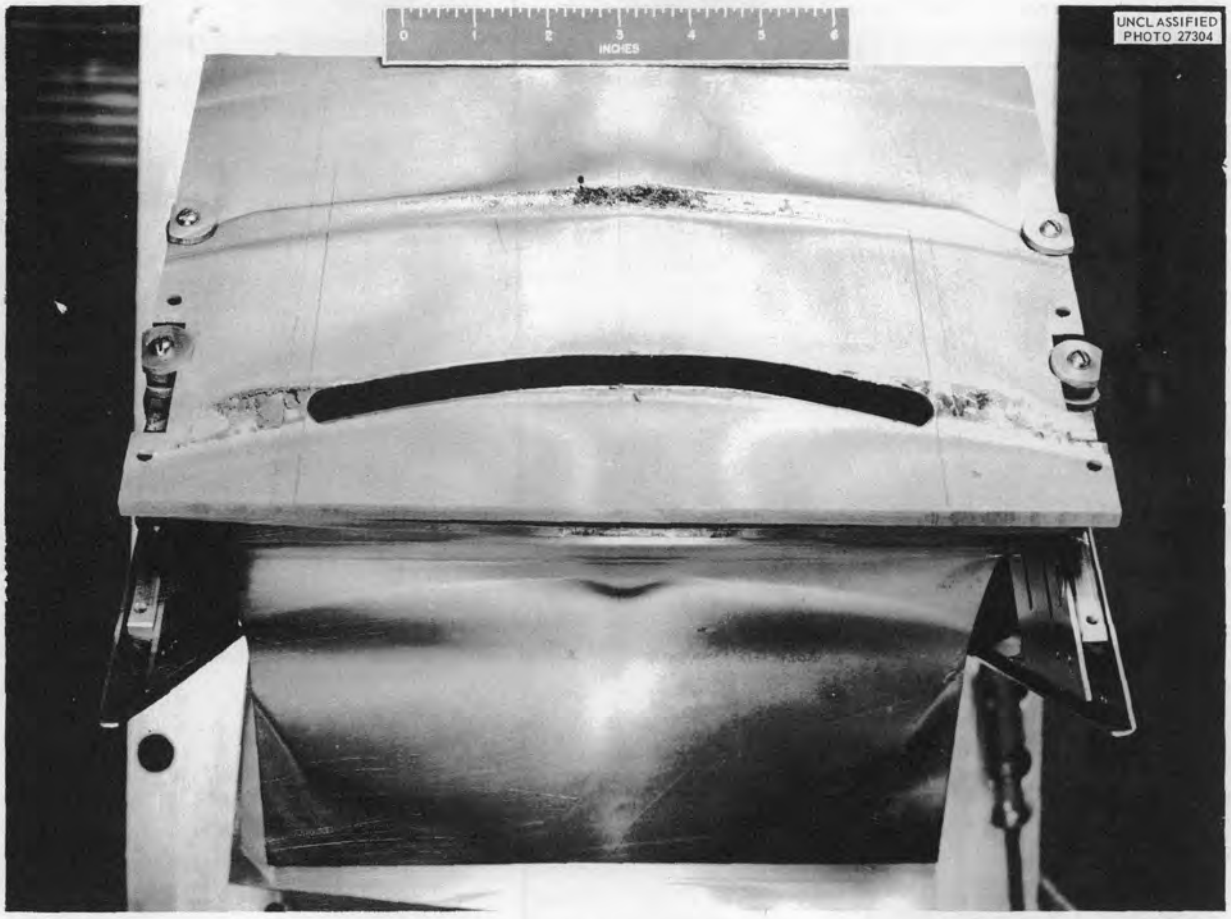

Fig. 5. B^{11} Receiver Assembly.

Lithium, Series IG-XAX

This separation was started in August 1956 to produce a sample of Li^6 having very high isotopic purity. Charge feed was a mixture of Li^6Cl and Li^6 in the ratio of 5 to 1. Calutron equipment was periodically washed to minimize sparking and to permit chemical recycling of the charge.

Operation was performed in a high-output type of ion source equipped with a filament-changing device. Maximum ion reception time in any run was 304 hr, the average for 13 runs being 189 hr. In comparison, normal expected filament life is some 30 to 40 hr.

The lithium ions were received in large, water-cooled copper collectors. Approximately 70% of the collected material was fixed in a well-defined pattern on the cold copper; the remainder was widely scattered. In recovering the Li^6, the material in the sharply defined pattern was placed in separate batches, since it was expected to be of higher purity than the scattered material.

This separation required the use of 2917 separator-hours, during which time ion reception was maintained for 2454 hr at an average rate of 234 ma. Peak output attained reached 431 ma. A metered amount of 153 g of high-purity Li^6 was collected.

Palladium, Series IH-XBX

During October 1956 the isotopes of palladium were separated for the purpose of replenishing the inventory established in 1953. This separation was performed by heating and ionizing spongy palladium in the electron bombardment-heated

source[3] developed in 1953 for use in separating the isotopes of the platinum group of elements. This source contains a graphite block $\frac{3}{4} \times 1 \times 6$ in. in length which has a $\frac{5}{16}$-in.-dia × 5-in.-long hole to contain the charge. Adjacent to this cavity and connected to it by a $\frac{3}{32} \times 5$ in. slot is a cylindrical $\frac{3}{8} \times 5\frac{1}{2}$ in. arc chamber cavity that has a $\frac{3}{32}$-in. ion-exit slit. This graphite block, supported in suitable graphite shielding, is heated to approximately 1750°C by electron bombardment.

The ions produced in this unit were collected in graphite receiving pockets positioned behind $\frac{1}{8}$-in. beam-defining slots. Since beam separation at the receiver was only 0.239 in., the collector for mass 105 was omitted in one receiver and those for masses 104 and 106 were omitted in the other. Thus the weighted percentage of the total ions collected was 71.6%.

Operation never reached its 1953 level. Sparking was severe in all runs, with resultant changes in bombardment heating and ion output. "Burning" of the graphite block by bombarding electrons eroded into the charge cavity and produced unstable vapor densities and erratic negative-electrode drains. Extremely high arc current, 7 to 8 amp, was required to achieve maximum output. Nitrogen support could never be withdrawn from the arc without resulting in complete loss of ion output. Focus of the beam was never really good, always being broad at the ends and being shifted slightly from the center line of the tank.

A total of 981 separator-hours was devoted to this series of runs. Ion reception was maintained during 507 hr at an average rate of 6.1 ma (71.6% of total). The following metered amounts of isotopic material were separated:

Isotope	Amount (g)
Pd^{102}	0.200
Pd^{104}	1.15
Pd^{105}	1.84
Pd^{106}	2.78
Pd^{108}	4.56
Pd^{110}	1.83
Total	12.3

[3]W. A. Bell, Jr., L. O. Love, and C. E. Normand, *A 2800°C Calutron Ion Source Unit and Its Use in Separating the Isotopes of Pd, Pt, Ru, and Ir*, ORNL-1767 (July 30, 1954).

Lithium, Series II-XAX

This separation was started on October 16, 1956, to separate at high output a sample of very pure Li^7. Charge feed consisted of LiCl plus Li in the ratio of 5 to 1, both materials being enriched in Li^7 and the charge being recovered for chemical recycling. Equipment and operation were essentially as described above ("Lithium, Series IG-XAX").

A total of 192 separator-hours was used in the separation. Ions were received during 123 hr at an average rate of 508 ma, the maximum attained being 770 ma. A metered amount of 15.9 g of Li^7 was collected. The purity of 11 g of this amount is expected to approach 99.995+% Li^7.

Tin, Series IJ-XAX

This separation was started on October 24, 1956, to replenish isotopes depleted in the inventory and is approximately 50% completed.

An $SnCl_4$ charge is being fed into an M-12 ion source from a flask external to the vacuum system. Operation has been good, being characterized by very infrequent flick sparking. The only difficulties encountered have been in maintaining even vapor flow through the leak valve in the charge feed line and with the copper tube feeding $SnCl_4$ into the arc region eroding through.

The separated material is collected in purified graphite pockets placed behind $\frac{1}{8}$-in. beam-defining slots. Pocket separation is 0.416 in. Peak production achieved has been 18.6 ma, and the estimated total collection of all tin isotopes to date is 60 g.

Platinum, Series IK-XBX

This collection of platinum isotopes was started on October 28, 1956, and is still in progress. The separated material will be used for inventory replenishment. Metallic platinum charge is being processed in the bombardment-heated ion source as described in "Palladium, Series IH-XBX" of this report.

Operation has been characterized by considerable sparking in the electrode region, seemingly triggered by negative-electrode drains. Increasing the cross-sectional area of the heated graphite block from $\frac{3}{4} \times 1$ in. to $1\frac{1}{4} \times 1$ in. has permitted the bombarding electron streams to be further

removed from the charge cavity, which has resulted in more even heat distribution and less fluctuation in output.

Ions are being collected in purified graphite pockets positioned behind ⅛-in. beam-defining slots. Focus of these ion beams has been extremely poor, and the graphite plate in which the slots are cut has been run at red heat between the pockets. Beam separation, 0.130 in., is such that certain masses cannot be collected; one receiver collects masses 190, 192, 195, and 198 (41.7% of the total), while the other collects masses 190, 194, and 196 (58.2% of the total). To date, an estimated 12 g of platinum isotopes has been separated.

PREPARATION OF CALUTRON CHARGE MATERIALS

C. W. Sheridan

The activities in the charge preparation laboratory fall into three general classifications: drying commercially acquired charge compounds by heating at reduced pressure; synthesizing charge compounds from more readily available chemicals; and recycling calutron wash solutions to form again the original charge compound. In this reporting period, charges for 11 elements were supplied to the operations group. In Table 2 these materials are grouped according to the treatment they received in the charge preparation laboratory.

TABLE 2. SUMMARY OF CHARGE PREPARATION LABORATORY ACTIVITIES

Purchased Commercially	Synthesized	Product Formed by Recycling
$PbCl_2$	From Dy_2O_3 to $DyCl_3$	Li^6Cl
$SiCl_4$	From Ca to CaI_2	Li^7Cl
Sb	From Ca to $CaCl_2$	$DyCl_3$
Sb_2O_3	From Sn to $SnCl_4$	Pd
Ca	From Fe to $FeCl_2$	Pt
Cu_2Cl_2		Re_2O_7
		Ir
		$H_3B^{10}O_3$

Eight of the eleven charges in columns 1 and 2 were dehydrated and outgassed. Dysprosium chloride, in addition to being made from Dy_2O_3, was recycled during operation. Initially, 1067 g of $DyCl_3$ was available; recycle operations permitted 1789 g to be supplied as calutron charges before the series was scheduled for termination. The final chemistry performed on dysprosium will leave the material as Dy_2O_3, from which future charges can be made.

Stannic chloride was prepared by the direct union of tin and chlorine in the apparatus shown in Fig. 6. The vertical reactor is filled to approximately two-thirds its height with mossy tin. Chlorine fed into the bottom of the reactor forms liquid $SnCl_4$, which runs down over the metal and reactor walls and quenches the hot reacting zone. The production rate is such that 500 g of $SnCl_4$ can be withdrawn from the bottom of the reactor per hour.

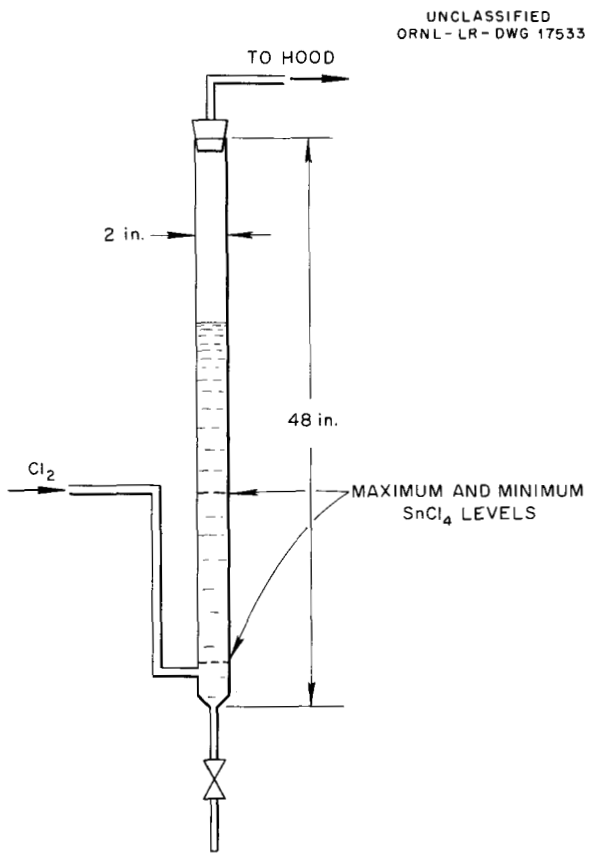

Fig. 6. Pyrex Reactor Used to Form $SnCl_4$.

Recycle operations included a cleanup of the rhenium processed in the last reporting period. Iridium recycle was initiated to get some large iridium scraps from metallurgical experiments back into the spongy form suitable for use as charge material. Recycles of Li^6, Li^7, Pd, Pt, and B are still in progress.

DEVELOPMENT AND PROCESS IMPROVEMENT

W. R. Rathkamp A. E. Cameron

Work on the thermal diffusion process for the separation of the isotopes of rare gases and of oxygen has continued. The oxygen columns are now ready for separation tests to be made on individual columns. The major effort during this period has been expended in getting the hot central wire columns for inert gases into operation. The Nichrome central wires are heated with direct current to avoid vibration in the combination of the earth's magnetic field and the stray field from the XAX magnet which is in close proximity to the diffusion columns. Unreliable operation of the power supply has considerably delayed attaining the necessary uninterrupted operation. The Cetron 203 rectifier tubes were operated well within the rating of 300-v d-c output and 500-v peak inverse, but arc-backs occurred. This happened even with a full-wave three-phase rectifier circuit in which the peak inverse voltage was only about 140 v. The supply was designed to deliver 30 amp at 130 v. Replacement of the Cetron rectifier tubes by surplus FG-172 Thyratrons connected as diodes has produced a supply which operates reliably, even though the tubes are being somewhat overloaded.

A 20-day run was made with argon. During this period it was necessary to bypass the sixth column because of a water leak which developed in a joint in the cold wall. The bottom four columns were pumped out twice during this period and refilled with fresh argon. Approximately 250 ml of argon enriched from 0.36% to 17% in the A^{36} isotope was removed from the final column.

The cascade has now been split into two units of four 20-ft columns each, and both sections are fed from a 10-liter reservoir. End columns of 500 ml are attached at the two light-isotope withdrawal points. The feed reservoir is periodically pumped out and refilled to maintain an effectively infinite reservoir. A run of sufficient duration is planned to produce 1 liter of highly enriched A^{36} before the cascade is again connected as an eight-column unit for krypton isotope separation.

Three additional hot wire columns are under construction to provide a small unit for experimental investigation or for additional processing of enriched product from the other assembly.

ISOTOPE CHEMISTRY AND UTILIZATION

P. S. Baker

INTRODUCTION

Chemical refinement of 78 lots of 17 elements was completed. By obtaining rough mass assays on homogeneized isotopic material from the collector pockets, it was possible to reduce by about 20% the number of individual lots which required processing. Several special techniques were developed for producing targets of elemental enriched isotopes.

CHEMICAL REFINEMENT OF ISOTOPES

R. L. Bailey F. M. Scheitlin
F. B. Thomas W. C. Davis

The refinement chemistry during this period included work with isotopes of the following 26 elements, some of which were reprocessed samples returned by borrowers: B, Si, S, Cl, K, Ca, Ti, Fe, Ni, Cu, Zn, Ge, Rb, Sr, Mo, Ag, Cd, In, Sb, Te, Ba, Nd, Dy, W, Tl, and Pb. Of these, dysprosium (three isotopes) was inventoried for the first time. With the exception of Dy, the following discussions deal only with those completed series of elements for which refinement procedures have been markedly changed. Dysprosium is included, although refinement has not been completed, because it was run for the first time.

Silicon

Silicon isotopes were collected on carbon, partially as elemental silicon and partially as silicon carbide. The deposit on the surface of the pockets was scraped off with a file, and the resulting mixture of silicon, silicon carbide, and carbon was burned in O_2 at 700 to 800°C. After the residual SiC and SiO_2 mixture had been fused with Na_2CO_3, the fusion cake was dissolved in water and the solution was filtered into a platinum dish. The solution was acidified with an excess of $HClO_4$ and then heated to dense fumes of $HClO_4$. The dehydrated SiO_2 was filtered off, washed with water until free of sodium salts, then washed with HNO_3, and finally ignited at 1100 to 1200°C for several hours. The use of graphite pockets and the subsequent scraping and ignition of the collected material provided two advantages: It permitted rapid assays of the sample to give "in-run" information on separation efficiency and also allowed combinations of pocket material of similar assay before refinement. Production data are given in Table 3.

Sulfur

Sulfur isotopes were collected as copper sulfide on copper turnings in copper pockets. The turnings were heated at 1000°C in a stream of hydrogen until free of sulfur, and the H_2S which formed was collected in ammoniacal $CdCl_2$. The resulting CdS was washed by centrifugation to remove most of the residual $CdCl_2$. The washed precipitate was placed in a pressure flask to which was added enough 3 *M* HCl to dissolve the CdS and more than enough $FeCl_3$ to oxidize the released H_2S to free sulfur. The sulfur was filtered, washed with water, and then washed with ethanol. It was dissolved in CS_2 and was recrystallized by evaporating off the CS_2 at room temperature.

Unfortunately, with this procedure a portion of the H_2S is oxidized to sulfate, which must be recovered by precipitation as $BaSO_4$. Table 4 shows the production data for these isotopes.

TABLE 3. PRODUCTION DATA ON SILICON ISOTOPES

Isotope	Lot No.	Weight of SiO_2 (g)	Impurities Found (%)*					
			Ca	Cu	Mg	Na	Ni	Fe
28	IA 973(a)	13.0	0.03	0.1	0.2	0.01	0.05	
29	IA 974(a)	1.49	0.05	<0.05T		0.05		
30	IA 975(a)	0.75		<0.05T	<0.02T	0.02		<0.02T

*T indicates trace.

TABLE 4. PRODUCTION DATA ON SULFUR ISOTOPES

Isotope	Lot No.	Weight of Sulfur as Element (g)	Weight of Sulfur as $BaSO_4$ (g)	Impurities Found (%)*					
				Na	Mg	Ca	Cu	Fe	Si
32	HH 902(a)	2.320				<0.02	<0.05		
			0.221			0.03	<0.05	<0.02	<0.05
32	HH 902(b)	0.356		No impurities detected					
			None recovered						
33	HH 903(a)	0.301		<0.01					<0.05FT
			0.058		<0.05		0.05		0.05
34	HH 904(a)	0.397			<0.05T				
			0.062			Not tested			
36	HH 905(a)	0.023		No impurities detected					
			0.006		<0.05		<0.05	0.02	0.1

*T indicates trace; FT, faint trace.

Dysprosium

Dysprosium isotopes were collected on carbon and were recovered by ignition of the pockets at 700°C in oxygen. The resulting ash was dissolved in dilute HNO_3, the solution was filtered, and the dysprosium was precipitated from the filtrate by addition of saturated oxalic acid solution. After ignition to Dy_2O_3 at 700°C, those lots containing appreciable amounts of rare-earth impurities were dissolved in dilute HNO_3 and purified by passage over a Dowex 50 ion-exchange resin. Then the samples of comparable isotopic abundances were combined and refined by a double precipitation of the hydroxide with NH_4OH, followed by re-solution in HNO_3, and precipitation of the oxalate with oxalic acid. The oxalate was ignited to Dy_2O_3 by heating slowly to 500°C and then heating at 950°C for 4 hr.

Barium

Barium isotopes were collected on carbon. The crushed carbon pockets were leached with 6 *M* HNO_3 and then diluted. After the suspension was filtered, the residual carbon was ignited in oxygen at 600°C in Vycor. The residue was dissolved in 6 *M* HNO_3 and added to the original leach solution. Lead and copper were removed by simultaneous electrodeposition on platinum electrodes. The solution was then evaporated to crystallization, and the specific gravity was adjusted to approximately 1.44 by adding 90 to 100% HNO_3. The solution and precipitate were stirred for about 30 min and then allowed to stand for another 30 min or more. The crystals of $Ba(NO_3)_2$ were filtered on a sintered-glass funnel and dried. When spectrochemical analysis showed appreciable strontium, the lot was subjected to a double precipitation of $BaCrO_4$ from ammonium acetate solution, with $(NH_4)_2Cr_2O_7$ used as the precipitant. The resulting $BaCrO_4$ was dissolved in HNO_3 and the specific gravity of the solution adjusted to 1.44 with 90 to 100% HNO_3, as indicated above. The crystals were filtered off, redissolved, and reprecipitated with concentrated HNO_3. The production data for the barium isotopes are shown in Table 5.

Silicon Reprocessing

In preparing elemental silicon by the reduction of SiO_2 with magnesium (ref 1), the steps by which unreacted Mg, Mg_2Si, and SiO_2 are decomposed and/or removed are leaching first with HCl and then with HF-H_2SO_4. The resulting fluosilicates are difficult compounds from which to recover the isotopic silicon. It has been necessary therefore to work out a special procedure to recover the enhanced material. The two solutions from the leaching steps are treated separately in steps 1 and 2 below and are then combined for the

[1]P. S. Baker *et al.*, *Stable Isotope Research and Production Semiann. Prog. Rep. Nov. 20, 1954*, ORNL-1829, p 42.

TABLE 5. PRODUCTION DATA ON BARIUM ISOTOPES

Isotope	Lot No.	Weight of $Ba(NO_3)_2$	Impurities Found (%)*									
			Mg	Sr	Al	Ca	Fe	Pb	Cu	K	Na	Si
130	HJ 914(c)	0.516			0.05	0.02	<0.02FT	<0.05FT	<0.05FT	0.01	0.03	
132	HJ 915(c)	0.973	<0.05FT	0.2		0.05	0.02	0.1				
	915(fp)	0.164	<0.05FT	0.3		0.05		0.5		0.01	0.03	
134	HJ 916(a)	1.726	0.03			0.04					0.01	
	916(b)	4.119	<0.05FT			0.05			<0.05FT			
135	HJ 917(a)	5.758				0.1				0.01	0.02	
	917(b)	13.430	<0.05FT			0.02	<0.02T		<0.05FT		0.03	
136	HJ 918(a)	7.015				0.03				0.01	0.02	
	918(b)	13.993	<0.05FT			0.03			<0.05T			
137	HJ 919(a)	4.700	<0.05T			0.1					<0.01T	
	919(b)	16.967				0.02						
	919(fp)	4.452	<0.05T			<0.02T					0.01	
138	HJ 920(a)	40.144				<0.02T						<0.05T
	920(fp)	17.013	<0.05T								0.03	<0.05T

*T indicates trace; FT, faint trace.

remainder of the processing. The procedure is as follows:

1. Make the solution alkaline in a plastic container with NH_4OH, and then add an ammoniacal solution of $ZnCO_3$.
2. Digest on a steam bath overnight, or until free ammonia is gone. Filter on paper. Repeat step 1 with filtrate, collecting any additional precipitate on the same paper. Wash well with 2% NH_4Cl solution.
3. After igniting the precipitate and paper in platinum at 800°C, leach the solid with 1:1 HNO_3, evaporate almost to dryness, and extract any zinc salts with dilute HNO_3. Filter off the SiO_2 on paper and ignite in platinum.
4. Fuse the SiO_2 with twice its volume of Na_2CO_3; cool, dissolve the melt in water, and filter through paper on a plastic funnel. If there is any residue, repeat the Na_2CO_3 fusion.
5. Make the filtrate acid with $HClO_4$ in platinum, add an excess of $HClO_4$ plus a small amount of HNO_3, and evaporate to fumes of $HClO_4$.
6. Filter through paper on a plastic funnel, wash with dilute HNO_3 followed by water, and heat in platinum to at least 950°C.

TARGET PREPARATION AND SPECIAL SERVICES

E. B. Olszewski P. S. Baker

The requests for special isotopic forms and for elemental targets of various shapes have continued. The needs during the period covered by this report made it necessary not only to develop new techniques but also to re-employ procedures such as those previously described.[2]

Target Preparation

Targets of Li^6 and Li^7 metal, $\frac{3}{4} \times \frac{3}{4} \times 1$ in., were prepared for Brookhaven National Laboratory.

Targets of $Sr^{86}O$, $Sr^{88}O$, $Rb^{85}F$, and $K^{41}F$, encapsulated in silver, were prepared for the ORNL Van de Graaff time-of-flight group.

Four isotopes of zirconium as ZrO_2 and one sample of isotopic metal were compressed into targets for Los Alamos Scientific Laboratory.

[2] P. S. Baker *et al.*, *Stable Isotope Research and Production Semiann. Prog. Rep. Nov. 20, 1954*, ORNL-1829, p 42; *Stable Isotope Research and Production Semiann. Prog. Rep. May 20, 1955*, ORNL-1908, p 42; *Stable Isotopes Semiann. Prog. Rep. May 20, 1956*, ORNL-2114, p 38.

One-gram metallic pellets of three titanium isotopes and a 17-g metallic Ge^{74} target for Bell Telephone Laboratories were prepared by procedures previously described.

Targets of elemental Sn^{116} and Sn^{120} were fabricated for Brown University, and metallic targets of Pb^{206}, Pb^{207}, and Pb^{208} were prepared for the ORNL Electronuclear Research Division.

Metallic targets of Cr^{50}, Cr^{54}, and Ni^{60} were prepared for Westinghouse Research Laboratories.

Conversions and Special Procedures

A 20-g batch of Li^6 was converted to Li_2SO_4 for Argonne National Laboratory.

Requests for extremely thin (0.1–0.4 mil) zirconium, copper, and nickel foils led to the development of a routine procedure for electroplating them on graphite-coated molybdenum electrodes by using cyanide plating solutions. The molybdenum cathodes were prepared by rubbing Aquadag on the surface, then wiping off the excess with a tissue. The back sides of the cathodes were masked with plastic paint. Current densities were 3.5 amp/dm^2 for zirconium and 4.5 amp/dm^2 for copper and nickel. Plating rates varied from about 8 to 23 mg/cm^2/hr. The films were stripped from the cathode by washing with water while separating the foil with a spatula.

A request for thin layers of iridium metal resulted in the evolution of an electrolytic procedure, suggested by A. E. Cameron, in which glacial acetic acid, sodium chloroiridate, and a small amount of HCl were used to obtain the proper current density. By using a graphite anode and a silver cathode at a current density of $\frac{3}{4}$ amp/dm^2, it was possible to obtain a bright plate. This gave a plating rate of about 4 mg/cm^2/day. At current densities greater than those specified, the plate was black and nonadherent.

Cooperative Calutron-Cyclotron Program

The 86-in. cyclotron was in operation much of the time during this six-month period, and evaporated targets of normal magnesium were prepared for study of the production of Na^{22} and Al^{26}. A target of evaporated normal calcium for the evaluation of the $Ca^{48}(p,pn)Ca^{47}$ reaction was prepared, and data should be available shortly. Information is being accumulated as to the number of potential users of Ca^{47} so that enough material can be prepared in a single bombardment of enriched Ca^{48} to satisfy the probable needs.

RARE-EARTH CHEMISTRY

Boyd Weaver
A. C. Topp[1] F. A. Kappelmann
L. T. Royer

FUNDAMENTAL DATA

Experience in the application of liquid-liquid extraction to the separation of rare earths has shown that the behavior of these elements in a tributyl phosphate–nitric acid system is very complex. Therefore it is necessary to determine the effects of acid concentration, element concentration, and atomic number by means of a long series of single-stage distribution experiments. Since the heavier elements are the least abundant, the most difficult to separate, and the most needed in the isotope separation program of this division, the study of extractive behavior is being limited to the elements beginning with samarium. Since yttrium, the major constituent of all sources of the heavier lanthanide rare earths, must be separated from them, its behavior is being studied with equal detail. Some attention has been given to thorium, which occurs as an impurity in most sources of rare earths and interferes with their separation by extracting into tributyl phosphate.

Experiments consisted in equilibrating, in separatory funnels, solutions of individual rare-earth nitrates of various concentrations, and containing various concentrations of nitric acid, with pure tributyl phosphate which had been previously equilibrated with nitric acid of the same concentration. The temperature at which most of the experiments were conducted was very close to 25°C, and the widest variation was only ±5°C. Experimental details have been progressively changed to favor simplicity but not to sacrifice accuracy. For example, complete separation of phases has been replaced by aliquot sampling. This also eliminates the necessity of careful measurement of the initial volumes and eliminates errors from volume change during equilibration. The laborious task of precipitating, igniting, and weighing samples has been replaced by simple alkalimetric titration.[2] Excellent agreement has been found in results by the two methods.

Data from the experiments with solutions of several nitrates which contained no nitric acid are plotted in Fig. 7 as equilibrium distribution lines. Concentration ranges extend up to saturation of the aqueous phase at equilibrium. Units are equivalents per liter. It can be observed that thorium is much more readily extracted than the rare earths and that it is difficult to wash from the tributyl phosphate by water. None of the rare

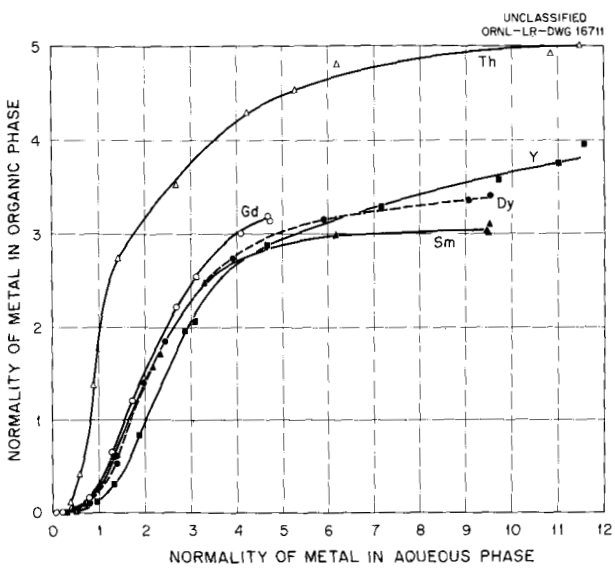

Fig. 7. Distribution of Nitrates Between TBP and Water.

earths extract well until their aqueous concentrations exceed 1 *N*. From that point until the aqueous concentration reaches approximately 4 *N*, the extraction is highly dependent on element concentration. Beyond this point, saturation of the organic phase is approached rapidly. There is little difference among the elements in this system, though gadolinium (element 64), whose nitrate is least soluble in water, is extracted better than samarium (element 62) and dysprosium (element 66). Yttrium (element 39) has an anomalous behavior in comparison to the others.

An earlier study[3] of the distribution of samarium

[1] Summer employee, Georgia Institute of Technology.

[2] F. A. Kappelmann, L. T. Royer, and Boyd Weaver, *Stable Isotopes Semiann. Prog. Rep. May 20, 1956*, ORNL-2114, p 36–37.

[3] A. C. Topp and Boyd Weaver, *Distribution of Rare-Earth Nitrates Between Tributyl Phosphate and Nitric Acid*, ORNL-1811 (Nov. 23, 1954).

and gadolinium nitrates at various acidities covered only a limited element concentration range. These data are plotted in Fig. 8 along with data at 14.2 *N* HNO_3 extended to aqueous saturation. Facts to be noted are the great dependence of extraction on acidity and the increasing curvature of equilibrium lines with atomic number and with increasing concentrations of rare earths and of acid.

The mapping of the behavior of individual elements was begun with yttrium. In order that separation factors will be determined at common acidities, it is planned to investigate the behavior of other elements at the same acidities as those used for yttrium. Distribution data for yttrium are in Fig. 9. At high acidities the curves are similar to those in Fig. 8 except for having been extended to aqueous saturation. At 3.8 *N* HNO_3 the line is nearly straight over a rather wide range of concentration. At lower acidities the acid interferes with the extraction caused by the rare-earth concentration, except when the concentration decreases sufficiently for the salting effect to be very low.

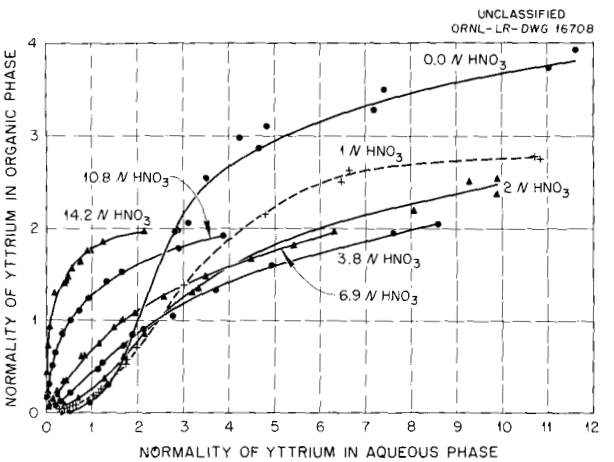

Fig. 9. Distribution of Yttrium Between TBP and HNO_3 of Various Concentrations.

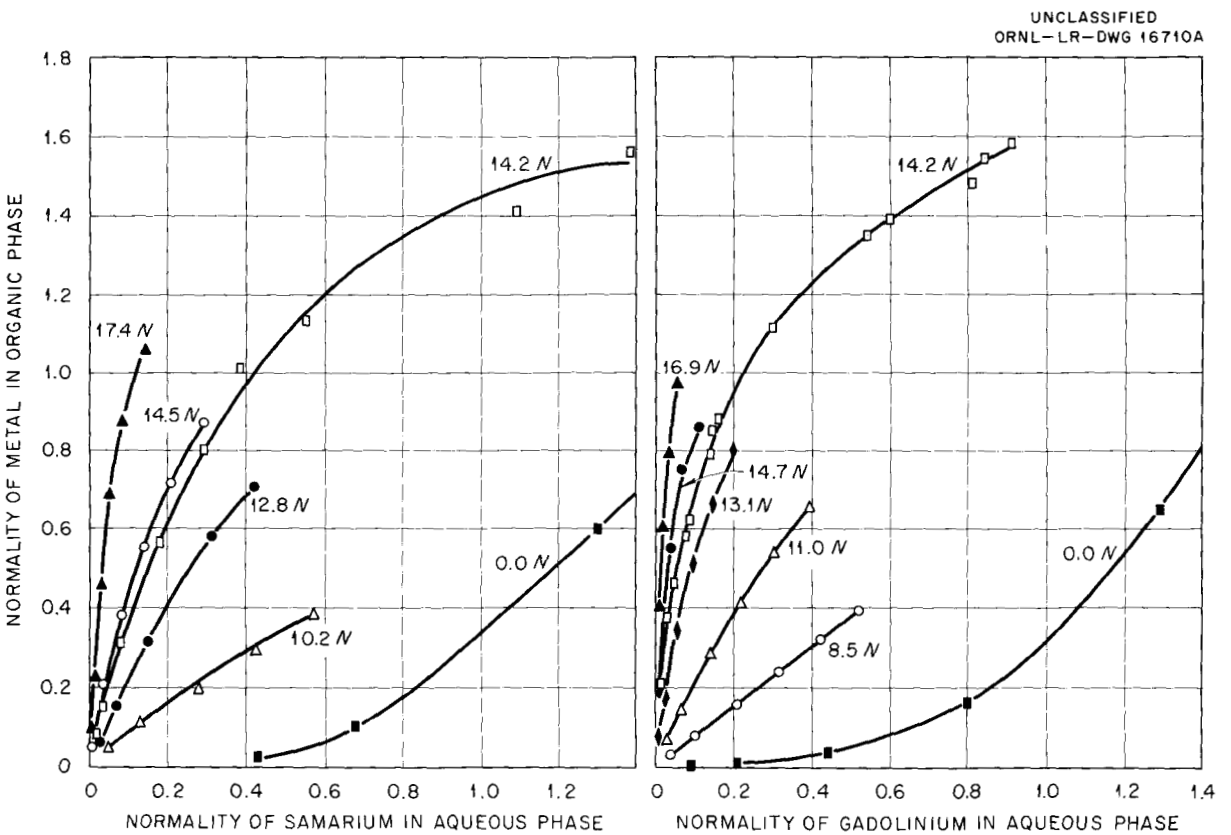

Fig. 8. Distribution of Samarium and of Gadolinium Between TBP and HNO_3 of Various Concentrations.

The study of acid systems has thus far progressed only through samarium, gadolinium, and yttrium; except for yttrium, only 14.2 N HNO_3 has been used thus far. From the data given in Fig. 10 it is evident that separation factors between the elements are much greater at lower concentrations. At a given aqueous concentration the separation factor for two elements is the ratio of the organic concentrations.

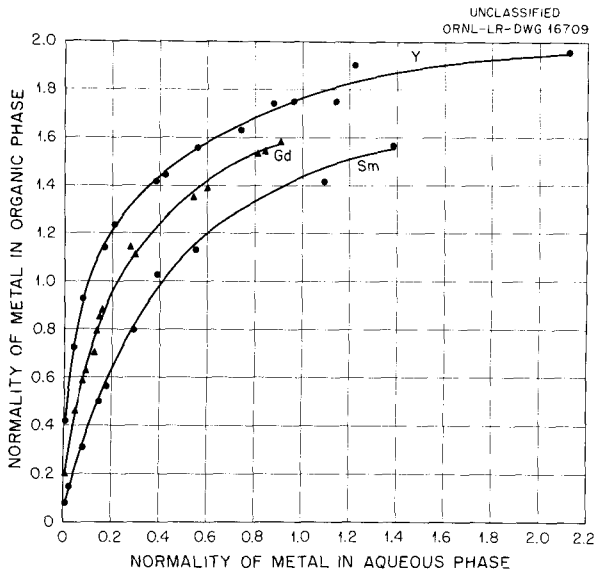

Fig. 10. Distribution of Samarium, Gadolinium, and Yttrium Between TBP and 14.2 N HNO_3.

SEPARATION OF RARE EARTHS

Liquid-Liquid Extraction

Activities in the field of separation of rare earths from mixtures have included the development of extractive devices and their operation on an experimental basis in order to determine their separability in multistage countercurrent systems. Comparison of experiments in mixer-settlers with those in pulsed sieve-plate columns has demonstrated that the latter are very inefficient for the undiluted tributyl phosphate–nitric acid system, in which there are only small differences in densities. The two 12-ft columns in series in this laboratory have been found to give about the same separation as an 11-stage mixer-settler. It is concluded that equilibrium stage heights in the columns are between 2 and 3 ft, rather than the few inches found in studies of ideal systems. Nevertheless, these columns, by which multikilogram quantities of several rare earths have been separated with considerable effort, are still being used for the simultaneous production of experimental data and concentrates of the heavier rare earths. A considerable fraction of the ytterbium and lutetium contained in a large quantity of gadolinite has been removed by operation at about 10 N HNO_3 concentration and with a highly concentrated nitrate feed solution at a flow rate very small compared with the total flow. The extracted product has been used in productive experiments in mixer-settler equipment.

The pulsed columns have now been equipped with additional pumps, reservoirs, and lines so that material in both effluents may be recycled to the system. This external reflux is expected to add greatly to the separating power of the machine. Additional ytterbium and lutetium are being stripped from the aqueous product of previous operations. Equilibrium separation relationships have not been established yet. The heavy earths will be introduced into the mixer-settlers at an appropriate location, so that the two devices are operated as parts of a cascade system. An aqueous stream from the mixer-settler can also be returned to the column system.

Liquid-Liquid Exchange

The mixer-settler system has been extended to 14 stages and equipped with means of concentrating and refluxing process streams. This makes it possible to maintain an essentially constant concentration of rare earths throughout the whole series of mixer-settlers. Recent operations have been at 14 to 15 N HNO_3 and rare-earth concentrations near saturation. Single-stage data in Fig. 10 indicate that these are the most unfavorable conditions for separation. However, when the organic phase is saturated, the relative distribution of two rare earths may be a function of the relative strengths of their complexes with tributyl phosphate. The term "liquid-liquid exchange" is suggested for processes taking place in such systems. In the current experiment the rare-earth content of the organic effluent is being totally refluxed, while material is taken from the aqueous reflux stream at a rate equal to the feed rate. Flow rates were chosen with the intention of dividing the material at approximately the

position of thulium and obtaining an increasing concentration of ytterbium and lutetium throughout the system. Analyses of oxides obtained from the reservoirs at opposite ends of the system are given in Table 6. It appears that the object of the experiment is being realized within the limitations set by the number of stages possible from the equipment. The division is near thulium, and the quantity of ytterbium lost from the system is low compared with the removal of yttrium. Other analyses, with organic effluents containing a measurable amount of erbium, indicate that yttrium and erbium behave essentially alike. This is an unusually high position in the lanthanide series for yttrium resemblance. Although this places yttrium only two elements away from ytterbium, there is still a separation factor of 50 between these elements.

TABLE 6. ANALYSES OF END CONCENTRATES

Concentrate	Amount (%)	
	In Aqueous Phase	In Organic Phase
Y_2O_3	85	15
Dy_2O_3	Trace	
Ho_2O_3	0.3	
Er_2O_3	3.2	Trace
Tm_2O_3	1.1	0.7
Yb_2O_3	6.6	55
Lu_2O_3	Trace	29

All single-stage distribution data are for individual elements. The behavior of elements in exchange systems cannot be predicted from such data. Therefore it will be necessary to obtain exchange data from single-stage experiments with mixtures of two or more elements. The necessity of analyzing fractions obtained from such distributions multiplies the work to be done, and the data obtained will be very complex.

MASS SPECTROMETRY AND RELATED TECHNIQUES

Russell Baldock

INTRODUCTION

Fundamental research is conducted in collision processes and closely related phenomena. This work is being directed toward neutron cross-section studies of special importance to reactor design.

Major accomplishments during this semiannual period are as follows:

1. An investigation has been made of the metastable transitions and collision-induced dissociations in the mass spectra of methane and acetylene.
2. Redesign and simplification of the source to produce positive ions from both solid and gaseous materials have led to considerable improvement in the efficiency of ion generation.
3. A 6-in.-radius research mass spectrometer (RS-1) has been completed and put in operation.
4. Construction of components for the two-stage research mass spectrometer (RS-2) is nearly complete.

COLLISION-INDUCED DISSOCIATIONS IN THE MASS SPECTRUM OF METHANE

C. E. Melton H. M. Rosenstock[1]

The mass spectrum of methane was investigated in the pressure range of 1×10^{-7} to 5×10^{-5} mm Hg. Several metastable-type peaks had been observed previously in methane by Mattauch[2] and Henglein,[3] but neither of these workers determined whether the dissociations were produced by single or multiple collision processes. Kolotyrkin *et al.*[4] studied the pressure dependence of two of these metastable-type peaks and concluded that they were produced by single collision processes.

This work was carried out to establish the pressure dependence of all the metastable-type peaks in the methane spectrum, to determine whether any of the diffuse peaks are due to true unimolecular decompositions of ion, and to obtain approximate values for the relative cross sections of the various collision processes. Also, the Bureau of Standards Mass Spectrometer Laboratory[5] reported a metastable transition in CD_4. At ORNL the presence of a corresponding transition in CH_4 has been investigated.

The mass spectrum of methane taken at various pressures is shown in Table 7. More complete data for the dissociation peaks are given in Figs. 11 and 12.

[1]Present address: Operations Research, Inc., Silver Spring, Maryland.

[2]J. Mattauch and H. Lichtblau, *Physik. Z.* 40, 16 (1939).

[3]A. Henglein and H. Ewald, *Mass Spectroscopy in Physics Research*, NBS Circular No. 522, p 205, 1953.

[4]V. M. Kolotyrkin, M. V. Tikhominov, and N. N. Tunitskii, *Doklady Akad. Nauk S.S.S.R.* 92, 1193 (1953).

[5]American Petroleum Institute, *Catalog of Mass Spectral Data*, Serial No. 455, Research Project 44.

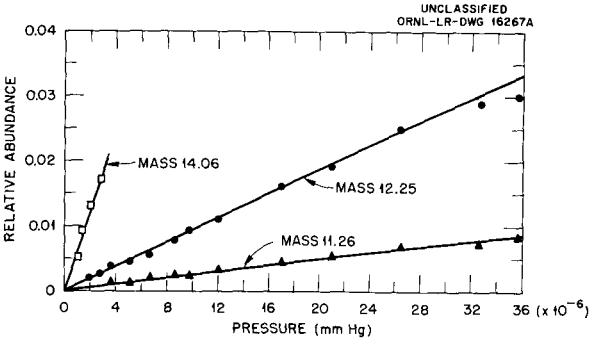

Fig. 11. Collision-Induced Transitions in Methane at Mass 14.06, 12.25, and 11.26.

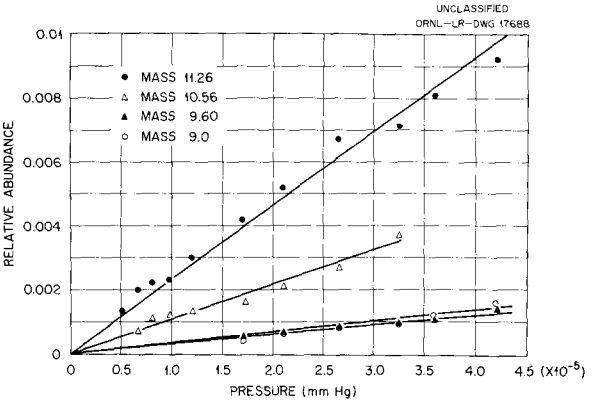

Fig. 12. Collision-Induced Transitions in Methane at Mass 11.26, 10.56, 9.60, and 9.0.

TABLE 7. MASS SPECTRUM OF METHANE AT VARIOUS PRESSURES* ($\times 10^6$ mm Hg)

Mass	Intensity at Various Pressures									
	0.17	0.29	1.0	1.9	2.7	6.6	9.7	17	33	42
9.0								0.0005	0.00092	0.0014
9.6								0.0004	0.00092	0.0016
10.56						0.00065	0.0012	0.0016	0.0037	0.0037
11.26						0.00195	0.0023	0.0042	0.0072	0.0092
12	1.292	1.291	1.290	1.293	1.296	1.295	1.293	(1.295)	(1.295)	(1.295)
12.25				0.0021	0.0026	0.0055	0.0092	0.017	0.029	0.037
13	3.82	3.82	(3.82)	(3.82)	(3.82)	(3.82)	(3.82)			
13.06					0.0038	0.0049				
14	9.35	9.35	9.31	9.32	9.31					
14.06			0.0051	0.013	0.017					
15	83.29	83.20								
16	(100)	(100)								
17	1.10	1.10								

*The figures in parentheses were used to normalize to a relative abundance of mass 16 = 100.

A plot of relative abundance vs tube pressure should give a straight line passing through the origin for a process arising from a single collision. These results clearly indicate that all these transitions are dissociations induced by single collisions. The results seem to parallel those of Kolotyrkin *et al.*,[4] who studied the pressure dependence of the $CH^+ \rightarrow C^+ + H$ (mass 11.07) and $CH_2^+ \rightarrow C^+ + 2H$ (mass 10.28) dissociation peaks. It is somewhat disconcerting that in the present study, under apparently quite similar conditions, these transitions are partially obscured by more abundant transitions at masses 11.26 and 10.56 (see Fig. 13).

The transition $CD_4 \rightarrow CD_3 + D$ reported in the CD_4 mass spectrum[5] corresponds to the $CH_4 \rightarrow CH_3 + H$ (mass 14.06) transition in the mass spectrum of CH_4 and was the most abundant collision-induced transition found in this study. It is probable that the transition found in CD_4 was also collision-induced.

An interesting comparison may be made between collision-induced and electron-impact-induced dissociation. If equal collection efficiency is assumed for the primary ions which pass through the field-free region and the secondary ions formed there by collision, the approximate cross sections for the various collision processes can be calculated. They are simply a ratio of the relative abundance of the dissociation peak to that of the parent peak. The mass spectrum formed by

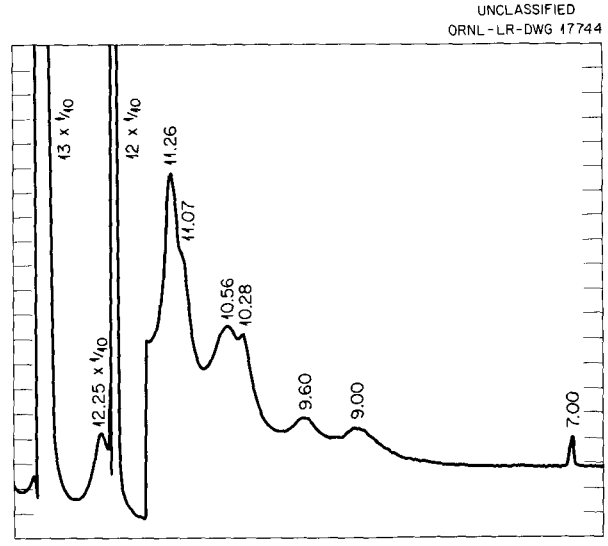

Fig. 13. Typical Scan of the Mass 7–13 Region of Methane at a Pressure of 1×10^{-5} mm Hg.

electron impact may also be regarded as a tabulation of cross sections. The two cross sections are compared in Table 8. The absolute cross section for the reaction $CH_4^+ \rightarrow CH_3^+ + H$ was found to be of the order of 10^{-16} cm^2. This value is in agreement with that determined by Kolotyrkin *et al.*[4]

METASTABLE AND COLLISION-INDUCED DISSOCIATIONS IN THE MASS SPECTRUM OF ACETYLENE

C. E. Melton M. M. Bretscher[6]
Russell Baldock

Data from work on methane indicate that there is a correlation between collision-induced and electron-impact-induced dissociation. This investigation was carried out to determine whether a similar correlation exists in acetylene and also to look specifically for transitions resulting from a rupture of the triple carbon bond.

Table 9 shows the mass spectrum of acetylene as a function of pressure. No attempt was made to distinguish between the CH^+ and the $C_2H_2^{++}$ contributions in the mass-13 region.

It is interesting to note the relative abundance of the ion appearing at mass 12.5. Since the relative abundance of this ion is independent of pressure and is probably not due to impurities, it was concluded that the ion arises from the doubly charged C_2H^{++} ion in acetylene. Henglein[7] studied doubly charged ions in acetylene but failed to report the C_2H^{++} ion. Other workers[8,9] also failed to report it.

Another interesting observation concerns the mass-14 peak which has been attributed at ORNL to the CH_2^+ ion. Since there was no background in the mass-14 region and since it could not be attributed to doubly charged mass-28 ions, because the slight increase in the mass-28 peak height could be accounted for by the C^{13} isotope effect, it was concluded that the principal portion of this peak must be attributed to the $C^{12}H_2^+$ ion. Ordinarily, ions of the type CH_2^+ would not be expected to occur, since C_2H_2 is a linear symmetrical molecule of the form $H-C\equiv C-H$. Apparently the CH_2^+ ion is formed by some type of rearrangement process.

A typical scan of the mass-23 region is shown in Fig. 14. Carbon dioxide was deliberately added to produce CO_2^{++} ions for a mass marker.

[6]Summer research participant from Alabama Polytechnic Institute, Auburn; present address: Department of Physics, Valparaiso University, Valparaiso, Indiana.

[7]A. Henglein, *Z. Naturforsch.* 7a, 165 (1952).

[8]F. L. Mohler and V. H. Dibeler, *Phys. Rev.* 72, 158A (1947).

[9]F. L. Mohler *et al.*, *J. Research Natl. Bur. Standards* 48, 188 (1952).

TABLE 8. RELATIVE CROSS SECTIONS FOR COLLISION PROCESSES

Ion-Molecule Reaction	Relative Abundance at 8×10^{-6} mm Hg	Relative Cross Section for Collision Reaction	Electron Impact Process	Relative Cross Section* for Electron Impact
$CH^+ \rightarrow CH_3^+ + H$	0.05	100	$CH_4 \rightarrow CH_3^+ + H + e$	100
$CH^+ \rightarrow CH_2^+ + (2H)$	0.008	16	$CH_4 \rightarrow CH_2^+ + (2H)$	11
$CH_4^+ \rightarrow CH^+ + (3H)$	0.001	2	$CH_4 \rightarrow CH^+ + (3H) + e$	5
$CH_4^+ \rightarrow C^+ + (4H)$	0.0003	1	$CH_4 \rightarrow C^+ + (4H) + e$	2
$CH_3^+ \rightarrow CH_2^+ + H$	0.006	14		
$CH^+ \rightarrow CH^+ + (2H)$	0.002	1		
$CH_3^+ \rightarrow C^+ + (3H)$	0.0003	1		

*Simply the relative abundance of ions in the methane mass spectrum obtained with 75-v electrons normalized to mass 15 = 100.

TABLE 9. MASS SPECTRA OF ACETYLENE AT VARIOUS PRESSURES* ($\times 10^6$ mm Hg)

Mass	Ion	Intensity at Various Pressures								
		0.23	0.24	0.30	0.74	1.0	2.0	2.4	2.8	3.1
5.50	$C_2H_2^+ \rightarrow C^+ + CH_2$					0.00016	0.00028	0.00037	0.00040	0.00050
5.76	$C_2H^+ \rightarrow C^+ + CH$					0.00020	0.00041	0.00052	0.00053	0.00055
6.0	$C_2^+ \rightarrow C^+ + C$ and C^{++}					0.00048	0.00064	0.00078	0.00084	0.00089
6.50	$C_2H_2^+ \rightarrow CH^+ + CH$				0.00028	0.00036	0.00072	0.00086	0.00100	0.10011
7.54	$C_2H_2^+ \rightarrow CH_2^+ + C$						0.00011	0.00017	0.00017	0.00020
10.29	$CH_2^+ \rightarrow C^+ + H_2$					0.000059	0.000087	0.000084	0.000094	0.00010
11.08	$CH^+ \rightarrow C^+ + H$				0.00028	0.00036	0.00040	0.00044	0.00046	0.00047
12	$C^+ + C_2^{++}$	0.96	0.96	0.97	1.01	1.03	1.01	1.01	0.98	0.99
12.5	C_2H^{++}	0.019	0.015	0.016		0.016				
13	$CH^+ + C_2H_2^{++}$	4.42	4.39	4.44						
13.5	$C^{13}C^{12}H_2^{++}$	0.074	0.073	0.073	0.071	0.067	0.068	0.069	0.066	0.063
14	CH_2^+	0.19	0.19	0.20	(0.20)	(0.20)	(0.20)	(0.20)	(0.20)	(0.20)
23.04	$C_2H^+ \rightarrow C_2^+ + H$	0.0082	0.0081							
24	C_2^+	5.67	(5.67)	(5.67)						
25	C_2H^+	20.72	20.79							
26	$C_2H_2^+$	(100.00)								
27	$C^{13}C^{12}H_2^+$	2.24	2.27	2.21						

*The figures in parentheses were used to normalize to a relative abundance of mass 26 = 100.

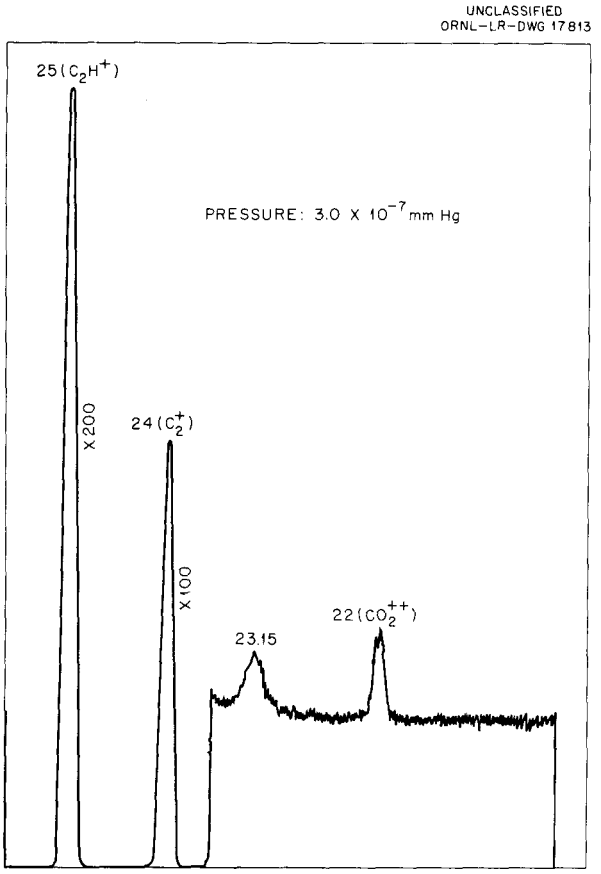

Fig. 14. Metastable Transition in Acetylene.

The relative abundance of this peak is essentially independent of pressure as shown in Fig. 15. Furthermore, the relative abundance is quite large even at pressures as low as 3×10^{-7} mm Hg, where collision-induced dissociations would not be expected to occur. For these reasons, it was concluded that the transition $C_2H^+ \rightarrow C_2^+ + H$ is a unimolecular dissociation and not a collision-induced reaction. It should be noted, however, that on the basis of the quasi-equilibrium theory[10,11] of mass spectra, unimolecular decompositions would not be expected to occur in molecules as small as acetylene.

In view of this surprising result, it was thought advisable to carefully re-examine the mass-23 region of the acetylene spectrum to exclude the

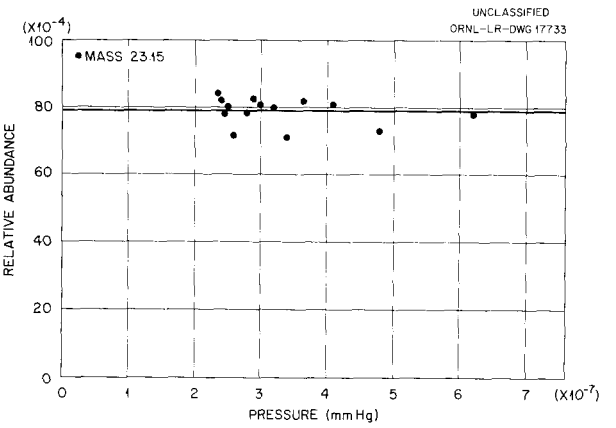

Fig. 15. Mass Spectrum of Acetylene Showing Relative Abundance of the Peak To Be Essentially Independent of Pressure.

possibility of it resulting from poor instrumental geometry. As a check, the spectrum of acetylene was examined with two other mass spectrometers. Identical spectra, within experimental error, were obtained with the three different instruments.

Absolute cross sections for the collision reactions could not be determined accurately because of insufficient knowledge of the absolute pressure and the lack of information regarding collection efficiency for ions scattered through small angles. Nevertheless, rough calculations for the $C_2H_2^+ \rightarrow CH^+ + (CH)$ reactions show the absolute cross section to be of the order of 10^{-15} cm^2.

The approximate relative cross sections can be calculated without the absolute pressure being known. These calculations are based on the same assumption that was used for the methane calculations. A comparison for the various cross sections is shown in Table 10.

It is interesting to compare the relative abundances for the various fragments of acetylene shown in Table 9 in terms of bond energies. Based on the assumption that there is equal collection efficiencies for the ions formed in the ionization chamber, it has been found at ORNL that the probability for breaking the two C–H bonds giving the resultant C_2^+ ion at mass 24 is significantly greater than it is for the rupture of the C≡C bond resulting in the CH^+ ion at mass 13. The bond energy for the C–H bond is given as

[10] H. M. Rosenstock *et al.*, *Proc. Natl. Acad. Sci. U.S.* 38, 667 (1952).

[11] A. Kroph, doctoral thesis, Univ. of Utah, 1954.

TABLE 10. RELATIVE CROSS SECTIONS FOR COLLISION PROCESSES

Ion-Molecule Reaction	Relative Abundance at 2×10^{-6} mm Hg	Relative Cross-Section for Collision Reaction	Electron-Impact Process	Relative Cross Section for Electron Impact
$C_2H_2^+ \rightarrow CH^+ + (CH)$	0.00072	100	$C_2H_2 \rightarrow CH^+ + (CH) + e$	100
$C_2H_2^+ \rightarrow C^+ + (CH_2)$	0.00028	40	$C_2H_2 \rightarrow C^+ + (CH_2) + e$	22
$C_2H_2^+ \rightarrow CH_2^+ + C$	0.00011	15	$C_2H_2 \rightarrow C^+ + C + e$	4

90.5 kcal and the value for (C≡C) is 145 kcal.[12,13] Since the nature of the molecule changes after breaking one C–H bond, the energy required to rupture the second C–H bond is not necessarily 90.5 kcal. However, if the mass spectrum of acetylene is interpreted in terms of bond energies alone, the intensity from the CH^+ ion should be greater than that from the C_2^+ ion; actually, the reverse is true.

A brief investigation was undertaken in an effort to learn more about the detailed mechanism of collision-induced dissociations. It was thought that perhaps upon electron impact the parent ion was formed in a high electronic state, thereby requiring very little additional energy to cause dissociation. Thus, in the ensuing collision with the neutral molecule, only a very small amount of kinetic energy need be transferred for dissociation. The interaction could then proceed without appreciable transfer of kinetic energy to the residual gas molecule, and the collision itself would not change the direction of flight of the fragment ions, in agreement with experimental observations.

Acetylene lends itself well to this investigation because of the high activation energy required to produce the fragment ions. The ionization potential of the acetylene molecule is 11.2 v, whereas the appearance potential for the CH^+ fragment ion is 22.2 v. If the collision-induced dissociation corresponding to the reaction $C_2H_2^+ \rightarrow CH^+ + (CH)$ results from an interaction between a $C_2H_2^+$ ion in a highly excited electronic state and a residual gas molecule, the peak at mass 6.5 would disappear when the electron ionizing energy is lowered to about 12 ev, producing $C_2H_2^+$ ions with little excitation energy. Furthermore, the abundance of the fragment CH^+ ion relative to the parent $C_2H_2^+$ ion should increase as the electron-impact voltage is increased. In the present study the ratio of the abundance of the mass-6.5 peak to that of the mass-26 peak was examined as a function of the electron impact potential as it was varied from 12 to 75 v. Within experimental error this ratio was found to be constant and was independent of the electron accelerating voltage. It is concluded therefore that the mechanism of the collision-induced dissociation process involves an interaction between a residual gas molecule and an unexcited ion rather than an excited one. This does not preclude, however, the possibility of dissociation of excited ions in collision.

[12] G. E. Coates and L. E. Sutton, *J. Chem. Soc.* 1948, 1187.

[13] T. J. Cottrell, *The Strengths of Chemical Bonds*, Academic Press, New York, 1954.

MASS SPECTROMETER SOURCE STUDIES

G. F. Wells J. R. Walton

A study of the mass spectrometer ion source was begun during this period with two goals in mind. The primary objective was the development of an efficient source for solid-sample analyses at elevated temperatures for use in RS-2, the two-stage, 12-in.-radius mass spectrometer. A secondary objective was simplification of the ion lens system to eliminate unnecessary electrical leads into the vacuum system.

The source in general use at present is a modified Nier[14] type of source as shown schematically in Fig. 16. It requires 12 electrical connections and presents a complex lens system of several interacting field gradients between successive

[14] A. O. Nier, *Rev. Sci. Instr.* 11, 212 (1940).

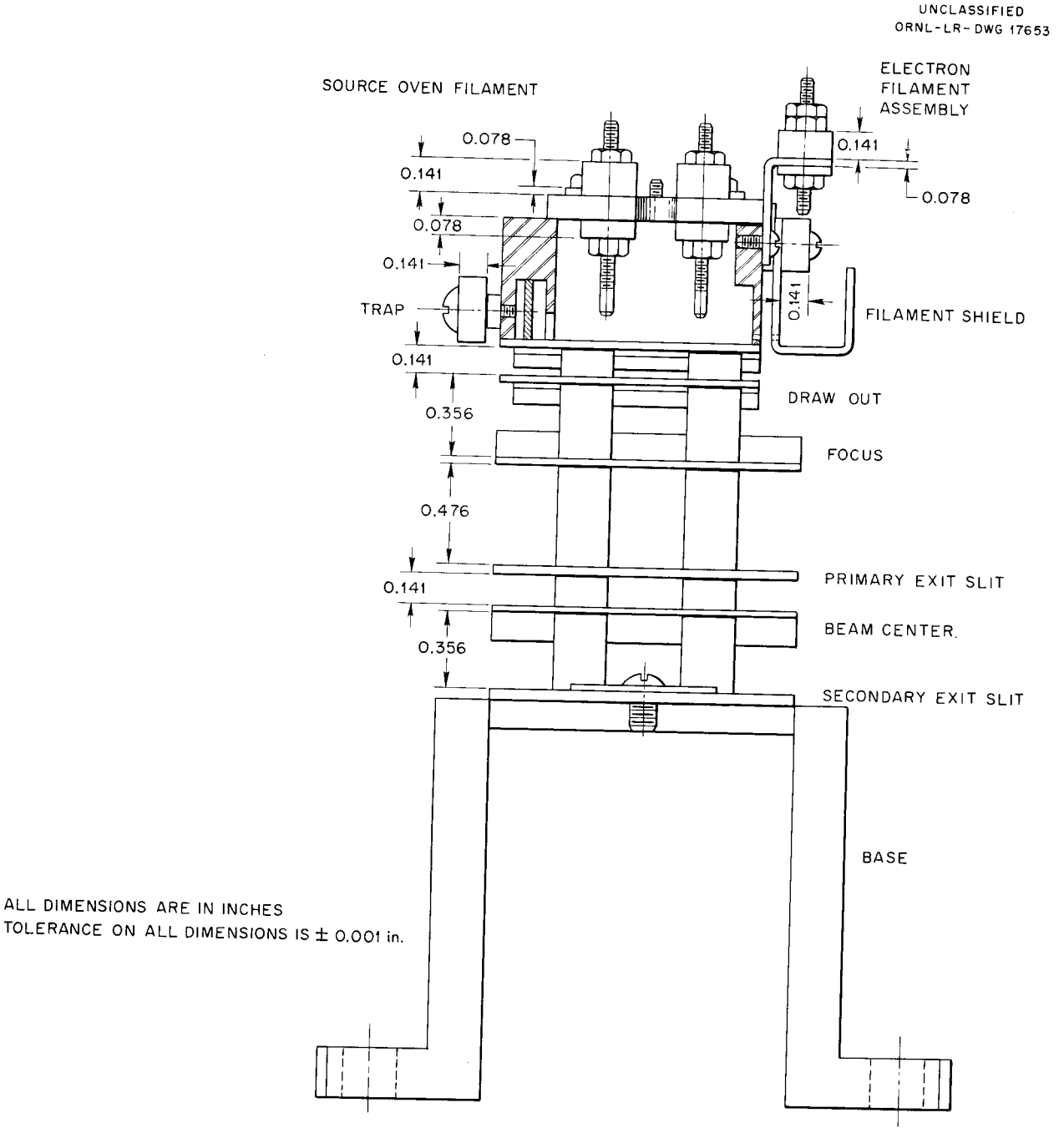

Fig. 16. Schematic Diagram of Modified Nier Source.

plates. The ionization chamber was modified from Nier's gas source to provide a unit block chamber with provision for electron filament, electron trap, and sample oven subassemblies as shown in Fig. 17. The sample oven[15] is resistance-heated to vaporize solid samples into an electron stream, where they are ionized in the conventional manner. Ion repeller voltages may be applied to the oven also. Ions may be produced directly from the hot surface of the oven if work function vs ionization potential conditions between the oven material and sample is appropriate. However, it is believed that the efficiency of this source for thermal ions can be improved, as others have shown,[16] by better geometry of the ion-emitting surface and of its relationship to the accelerating field.

Barnard[17] has developed the following equation (identical in form with the equation of an optical lens) for the lens action of a single slit aperture as shown in Fig. 18:

$$\frac{E_b - E_a}{2V_c'} = \frac{1}{d_b} - \frac{1}{d_a} = \frac{1}{f_c},$$

where E_b denotes the field strength between B and C, E_a the field strength between A and C, V_c' the potential of plate C with respect to A, d_a and d_b the separation between A and C and C and B, respectively, and $1/f_c$ the focal power of the slit lens.

If E_b and E_a are considered to be linear such that

$$E_b = \frac{V_B - V_C}{d_b} = -\frac{V_C}{d_b} (V_B = 0)$$

and

$$E_a = \frac{V_C - V_A}{d_a} (V_C = V_A - V_c') ,$$

the above equation may be used to derive an equation relating the spacing ratio $D = d_a/d_b$ to

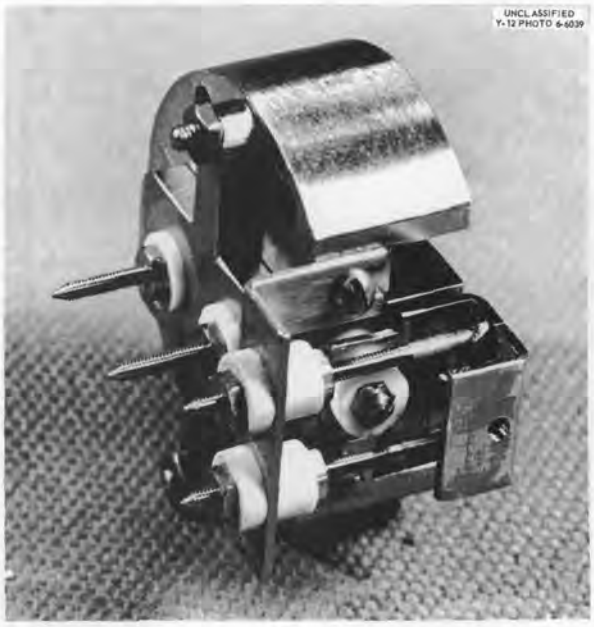

Fig. 17. Unit Block Ionization Chamber.

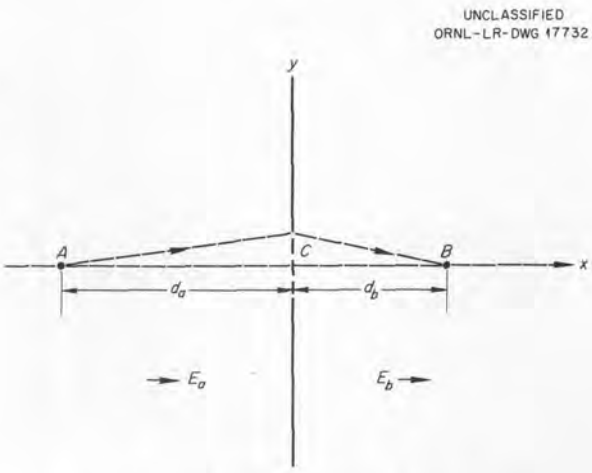

Fig. 18. Slit Aperture Lens.

the voltage ratio $V = V_A/V_C$:

$$D = \frac{1 - V}{3 - 2V} .$$

Figure 19 shows a plot of D vs V. Since practical mass spectrometry accelerating voltages dictate that V must be positive and greater than 1 and since d_b and d_a from Fig. 18 are measured positively and negatively, respectively, from plate C,

[15] J. R. Walton, *High Temperature Mass Spectrometer Oven*, ORNL-1473 (Jan. 8, 1953).

[16] M. G. Inghram and R. J. Hayden, *Mass Spectroscopy*, p 30–31, National Academy of Sciences, Washington, 1954.

[17] G. P. Barnard, *Modern Mass Spectrometry* p 69–85, Institute of Physics, London, 1953.

making D negative, the region from $V = 1$ to $V = 3/2$, $D = 0$ to $D = -\infty$, is the applicable region of this curve. This indicates that from an ion optical point of view the lens spacing is not critical, since a small voltage change on V_c can change the V ratio adequately between 1 and $3/2$ to bring a beam to focus for any D ratio from 0 to $-\infty$. Barnard indicates, however, that for practical attainment of the proper field interaction to give this focusing action, the d_a spacing should be greater than the aperture in slit C. To attain maximum transmission of ions, the opening in slit C should be as large as possible while the beam is still being focused in the collimation region.

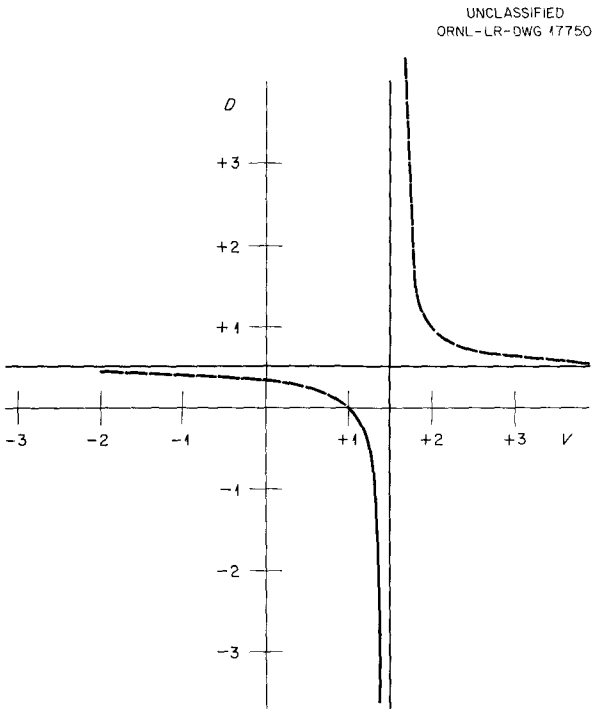

Fig. 19. Spacing Ratio, D, vs Voltage Ratio, V.

This approach indicates that by proper selection of spacing and voltages all other plates than the ion chamber exit plate, focusing plate, and collimating plate in the Nier source can be eliminated. A plate-by-plate elimination of plates in the present source is being investigated to study the changes in beam intensity and resolution. The first plates to be removed were the "beam center" plates in the collimation section. An adequate beam was obtained with such a source in the alignment period of RS-1, the 6-in.-radius single-stage research spectrometer. No comparative data are yet available. The mercury spectrum illustrating the resolving power of RS-1 was taken with this source.

Preliminary tests have been made on the ion source shown schematically in Fig. 20 in which major changes in accelerating plate spacing were

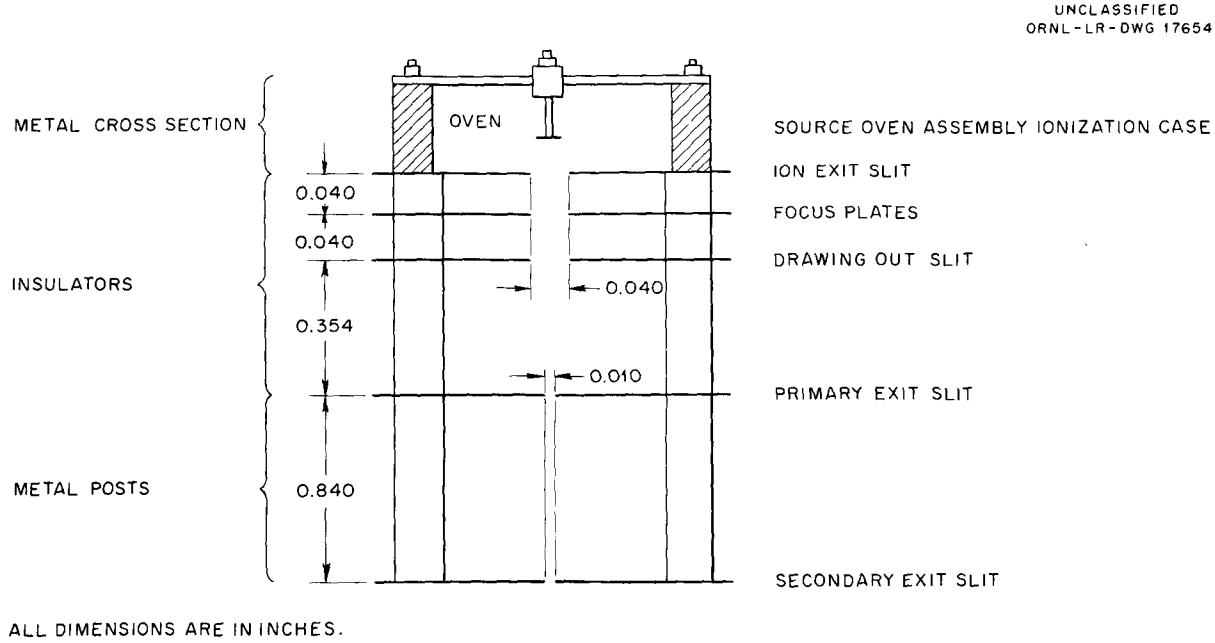

Fig. 20. Schematic Diagram of RS-2 Source.

made and the beam center plates were omitted. Comparison of beam strengths between the modified Nier source and the RS-2 source was made by using a Ga_2O_3 sample and monitoring the thermally produced Ga^+ ions. In four examinations the RS-2 source produced comparable peak heights of Ga^+ at lower oven temperatures, which indicates a better source efficiency.

SINGLE-STAGE RESEARCH SPECTROMETER RS-1

G. F. Wells C. E. Melton

The RS-1 spectrometer has been constructed to carry out various research projects which can easily be done in a single-stage 6-in.-radius, 60-deg sector type of instrument with differential pumping. It is now in complete operating condition and has the following characteristics.

Dual Pumping System. – A three-stage Martin[18] mercury diffusion pump capable of a pumping speed of 80 liters/sec in the 10^{-5} mm pressure range evacuates the source to a base pressure of 2×10^{-9} mm Hg. The tube and receiver chamber are evacuated by a two-stage Martin mercury diffusion pump capable of a pumping speed of 8 liters/sec in the 10^{-5} mm pressure range to an equal base pressure. Each of these pumps uses liquid-nitrogen trapping. The only aperture connecting the two systems is a $\frac{1}{4} \times 0.005$ in. slit, which is the final exit slit of the ion source.

A regulated leak has been provided in the receiver chamber so that the tube pressure may be regulated with a known gas different from the sample gas. A study of the variation of source chamber pressure with tube pressure indicates that a pressure differential of between one and two orders of magnitude may be maintained between the two. Argon was used as the tube gas and the mass-40 peak was monitored while the tube pressure was increased. A subsequent check of the mass-40 peak intensity when argon was admitted through the sample-system leak indicated a 7% contribution of gas from the tube to the source at a pressure ratio (P_{tube}/P_{source}) of 30:1. The source chamber pressure was 5×10^{-7} mm Hg.

Resolution. – A mercury spectrum was obtained as shown in Fig. 21. Resolution, R, is generally reported in two different ways. The classical

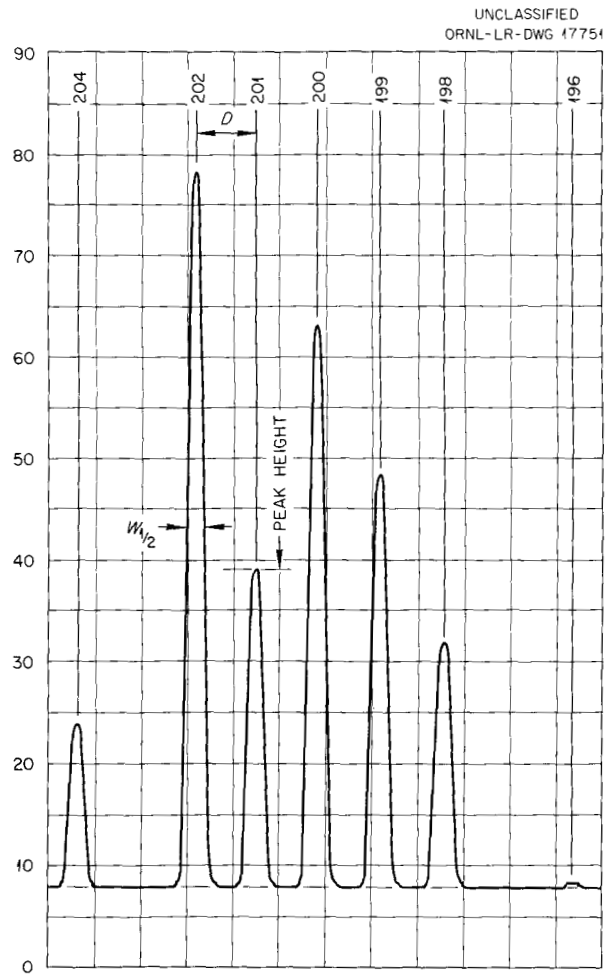

Fig. 21. Mercury Spectrum Illustrating Resolution for RS-1.

method is to report a value of $R = M/\Delta M$ for $D = W_{1/2}$, where M is mass, ΔM change in mass, D the dispersion, and $W_{1/2}$ the beam width at $\frac{1}{2}$ peak height as described in Fig. 21. Since D is defined from the theoretical mass spectrometer ion trajectory equation to be $D = r(\Delta M/M)$, where r is the radius of the analyzer section, R may be written $R = r/D = r/W_{1/2}$. From Fig. 21

$$W_{1/2} = 0.27D = 0.27\ (6)\ \frac{1}{202} = 0.0082 \text{ in.}$$

This is a constant for all beams and depends only on geometrical constants of the given spectrometer when scanning electromagnetically. Hence $R = r/W_{1/2} = 6/0.0082 = 730$.

[18] H. S. Martin & Co., Evanston, Ill.

A practical method of reporting resolution is to give the ratio of the valley between two adjacent masses to the peak height of the smaller of the two expressed as a percentage when the receiver slits are closed so that not less than 95% of the maximum value of the peak is being received. On this basis and using masses 201 and 202 the resolution would be 0.00%.

Sensitivity. – The sensitivity of the spectrometer is an expression of its ability to develop a measurable peak from a given sample pressure and is expressed in millivolts per micron of sample pressure in the sample reservoir per microampere of ionizing current. RS-1 developed a peak of 842-mv intensity with an ionizing current of 7.2 μa at a sample pressure of 26 μ. This gave a sensitivity of 4.5 $mv \cdot \mu^{-1} \cdot \mu a^{-1}$. This figure is superior to that for MSB, the G-E analytical spectrometer which has a sensitivity of 0.28 $mv \cdot \mu^{-1} \cdot \mu a^{-1}$.

Other Special Features. – The tube has a wrapped Nichrome ribbon bake-out system which is controlled in the source region to a temperature of 225°C. Provision has been made to utilize either a vibrating-reed electrometer or an electron multiplier and counting technique at the receiver. The alignment and the testing work conducted to date have been done with the vibrating reed. Other electronics for providing the 2000-v accelerating voltage and for the magnetic field current are standard regulated power supplies with stability and noise figures of 0.01% long-term drift and 0.001% ripple.

TWO-STAGE MASS SPECTROMETER RS-2

J. R. Walton Russell Baldock

The power installation for the RS-2 spectrometer is complete. The two main magnets have been placed in operating position, and preliminary measurements have been made of the flux as a function of the exciting current. Nuclear magnetic resonance equipment, Numar[19] model 103, was used as a flux meter. Since it is highly important that the two magnets have the same flux for successful operation of the machine, an exact knowledge is required of the flux in the respective magnets for the same current. It was found that at 1854 gauss the flux in the two magnets differs by only 1.4 gauss. This can easily be corrected by shunting a portion of the current in the magnet with the higher flux.

The electron multiplier and counting circuitry to be used for ion current measurement has been tested on another mass spectrometer. The gain of the 14-stage electron multiplier is at least one million. The vacuum system is essentially complete and testing of components has begun.

[19]Nuclear Magnetic Corp., Boston, Mass.

APPLIED MASS SPECTROMETRY

J. R. Sites

INTRODUCTION

In addition to the continuing effort in analyzing the calutron separated isotopes, the Applied Mass Spectrometry section has applied its equipment and techniques to a wide variety of ORNL problems.

Over 100 cylinders of argon of very low (ppm) oxygen content were analyzed for use as inert cover gases in the Metallurgy Division. A check has been made on the progress and successful production of the N^{15} columns in the Chemical Isotopes Separations Group. The problem of the solubility of xenon in fused salt is under study. The existence of various polymer vapor species of fused salt is being determined.

The relative isotopic abundances of a hot sample of fission-product krypton were determined. The U^{238} content of some HRT fuel batches was checked. Some work was done on the determination of small amounts of rare earths. The nitrogen and oxygen isotopic ratios of some spiked nitrates for diffusion experiments were determined. Quite a bit of preliminary work was done on checking the vacuum tightness of welded vessels by means of isotopic dilution techniques.

STABLE ISOTOPE ANALYSES

H. B. Green E. J. Spitzer

Analysis of the relative isotopic abundances of calutron enriched isotopes has continued. During the period of May through October, 135 analyses were made on samples of 21 elements. The compound used for each element and the specific ions measured are shown in Table 11. All samples were run from a tantalum filament oven.

RÉSUMÉ OF MASS SPECTROMETRY ANALYSES

L. O. Gilpatrick C. E. Prather
M. M. McMahan

The total number of mass spectrometer analyses performed from May through October is 1015. The distribution among the main categories is given below:

	Total Number of Analyses
Stable Isotopes Division	135
Chemical Isotope Separations	471
Chemistry Division	17
Metallurgy Division	226
Reactor Projects	50
Miscellaneous	116

TABLE 11. IONS MEASURED IN STABLE ISOTOPE ANALYSES

Atomic No.	Element	Compound	Ions Measured	
			Thermal	Electron Produced
3	Lithium	$LiSO_4$	Li^+	
12	Magnesium	MgO		Mg^+
14	Silicon	SiO_2	SiO^+	
17	Chlorine	NaCl		Cl^+
20	Calcium	CaI		CaI^+
22	Titanium	TiO_2	TiO^+	
30	Zinc	ZnO		Zn^+
32	Germanium	GeO_2		Ge^+
37	Rubidium	RbCl	Rb^+	
38	Strontium	$Sr(NO_3)_2$	Sr^+	
40	Zirconium	ZrO_2	ZrO^+	
42	Molybdenum	MoO_3		MoO^+
47	Silver	AgCl		Ag^+
48	Cadmium	CdO		Cd^+
52	Tellurium	Te		Te^+
60	Neodymium	Nd_2O_3	NdO^+	
62	Samarium	Sm_2O_3	Sm^+	
66	Dysprosium	Dy_2O_3	Dy^+	
74	Tungsten	WO_3		WO_2^+
82	Lead	$PbCrO_4$		Pb^+

ANALYSIS FOR CONTAMINANTS IN VERY PURE ARGON

C. E. Prather M. M. McMahan

Over 100 commercial cylinders of argon were sampled and checked on a mass spectrometer for contaminant gases in the ppm range. It is desired to sort out the cylinders which have less than 10 ppm of oxygen in them. In order to analyze reliably for contaminants in the ppm range, all sampling must be very carefully done to prevent any addition of contaminant gases, most especially air in-leakage. The technique used here involves the use of an auxiliary vacuum system.

The cylinder of gas to be tested is placed next to the auxiliary vacuum system and is connected to it through a vacuum-tight pressure reducing regulator and a double-ended gas sample bulb. With the cylinder's own valve still closed, all the other valves, including the regulator, are opened, and the entire system is evacuated to at least 1×10^{-5} mm Hg. After this pressure is reached, the sample bulb is isolated from the vacuum system; then argon is carefully let into it and flushed through it to the atmosphere through a side stopcock. After 2 or 3 min of flushing, the two stopcocks on the sample bulb are closed. This sample of argon at atmospheric pressure is then put on the sample-inlet system of the gas mass spectrometer. After appropriate evacuation of the inlet system, the pressure in the expansion volume is increased until the A^{36} ion peak is nearly full scale on the 500X scale of the vibrating-reed electrometer. The VG-1A ion gage rises from a base pressure of 4×10^{-8} mm Hg to about 1.5×10^{-5} mm Hg. The scanning of the ion peaks is then made in the normal way, switching to the appropriate intensity ranges for each on the strip chart recorder. The following ion peaks are scanned slowly: H_2 at mass 2, He at mass 4, CH_4 at mass 16, H_2O at mass 17 (doubly charged A^{36} precludes the use of mass 18 for H_2O), hydrocarbon at mass 27, N_2 at mass 28, O_2 at mass 32, A at mass 36, and CO_2 at mass 44. Great care is taken not to let the enormous ion peaks of argon mass 40 and doubly charged A^{40} at mass 20 fall on the receiver slit, as their very large currents will cause unwanted effects in the 10^{10}-ohm electrometer input resistor. The CO_2 peak is on the very large tail of the A^{40} peak.

The mass spectrometer must be cleaned before it is used for argon so as to have the minimum of residual background ion peaks, as their intensities must be subtracted from the mass spectrum obtained from the sample. The mass spectrometer has been calibrated for these contaminant gases, and the correction factors for their differences in ionization have been determined. An important feature of this method is that the relative abundance of the A^{36} isotope gives a "lever" of a factor of over 200 for the total amount of argon.

A cylinder that has about 10 ppm of O_2 has been set aside as a control, and it is run every few days in order to check the delicate sampling technique and to check on the day-to-day and week-to-week reproducibility of the mass spectrometer. The 95% confidence interval for 20 different loadings of this control is ±2 ppm out of 11 ppm. This includes data taken when the mass spectrometer background was not so low as usual because of running other samples from which residual ion peaks remained. Table 12 shows a typical analysis as reported. In the mass spectrometer used, it is impossible to separate N_2 and CO, both of which have a mass of 28.

A few samples of helium have been analyzed in this same manner, and the results are equally as good. In this case the electrometer input resistor is switched to one with 100 times less resistance for a "lever" on the very large helium peak at mass 4.

TABLE 12. TYPICAL ARGON ANALYSIS

Mass	Ion	Relative Amount	
		Per Cent	ppm
2	H_2		
4	He		
16	CH_4		6
17	H_2O		
27	Hydrocarbon		1
28	$N_2 + CO$		42
32	O_2		13
36	A	99.994	
44	CO_2		

SPECTROSCOPY RESEARCH LABORATORY

J. R. McNally, Jr.

INTRODUCTION

Major accomplishments during this semiannual period are as follows:

1. The infrared spectra of the isotopic molecules NT_3, NT_2H, and NTH_2 were observed with the use of up to 150 curies of tritium.
2. Attempts at synthesis of the cyanic and thiocyanic acids involving attempted deuterium substitution using $KDSO_4$ and KSCN (or KOCN) proved conclusively that the reaction involves hydrogen from moisture present rather than from the $KDSO_4$.
3. A preliminary energy level scheme for plutonium has been determined which involves approximately one-third of all Zeeman effects measured.
4. The nuclear magnetic moment and quadrupole moment ratios of U^{233} and U^{235} have been accurately determined.
5. A summary of x-ray diffraction data (ORNL-2092) for 74 compounds has been prepared.

MOLECULAR SPECTROSCOPY

Infrared Spectrum of NT_3

P. A. Staats H. W. Morgan
J. H. Goldstein[1]

The infrared spectra of the molecules NT_3, NT_2H, and NTH_2 were observed in the region 5000 to 450 cm^{-1}.[2] Frequencies were measured with a Perkin-Elmer single-beam double-pass spectrometer equipped with LiF, NaCl, and KBr prisms. Improved relative intensities were obtained at somewhat lower resolution with a Perkin-Elmer Model 21 double-beam spectrometer employing LiF, NaCl, and CsBr prisms. Approximately 0.002 mole (150 curies) of NT_3 was synthesized, allowing a maximum pressure of about 10 cm Hg in a 10-cm absorption cell.

The NT_3 was prepared by the reaction of T_2O and magnesium nitride. The tritiated water was synthesized in a manner previously described,[2] and Mg_3N_2 was made by the reaction of coarse magnesium powder with nitrogen gas in a tube furnace at 600°C. To prevent the formation of oxide, the reaction was carried out in a platinum boat. It was found that the reaction of T_2O with an excess of the best nitride so produced gave only about 60% of the theoretical yield. Thus the synthesis was performed in two steps, with the unreacted T_2O being recovered after each reaction by heating the nitride sample. The NT_3 was found to contain no detectable T_2O but did contain approximately 5% hydrogen which allowed observation of the mixed species. Recovery of the tritium was accomplished by the use of metallic uranium, as has been previously described.[3]

The NT_3 in the gas phase at approximately 10 cm Hg pressure underwent an estimated 20% decomposition in a period of 120 hr. Some fraction of this resulted from reaction with the AgCl windows, producing free silver and lowering the transmission of the cell. Strong "window" bands were produced, among which are believed to be the absorptions of NT_4Cl.

Analysis of the observed spectra is not yet complete, particularly for the mixed species where isotopic substitution removes the degeneracies of two of the NT_3 fundamentals. The tentative frequency assignments for NT_3 are given in Table 13 (the convention of Herzberg is used in the numbering). No splittings, arising from the molecular inversion, were observed in the ν_2 and ν_4 bands of NT_3; nor were any ν_3 fundamentals observed.

[1]Consultant, Emory University, Atlanta, Georgia.

[2]P. A. Staats, H. W. Morgan, and J. H. Goldstein, *J. Chem. Phys.* 24(4), 916 (1956).

[3]P. A. Staats, H. W. Morgan, and J. H. Goldstein, *Stable Isotopes Semiann. Prog. Rep. May 20, 1956*, ORNL-2114, p 1.

TABLE 13. VIBRATIONAL ASSIGNMENTS IN TRITIATED AMMONIA

Molecule	ν_1	ν_2	ν_4	
NT_3	2190.5	654.0	997.0	
NT_2H		748.0	1401.0 a*	1077.5 s*
		743.5		1075.0 s*
NTH_2		867.0		
		851.0		

*a and s refer to the vibrations asymmetric and symmetric with respect to a plane of symmetry passing through the nitrogen and hydrogen atoms.

The magnesium nitride samples, which now contain tritium as the trioxide, will next be reacted with D_2O to produce the mixed species ND_2T and NDT_2. By further dilution with NH_3 it is hoped to observe the species NHDT.

Vibrational Spectra of $Ca(OH)_2$

W. R. Busing[4] H. W. Morgan

Attempts to observe the Raman spectrum of single crystals of $Ca(OH)_2$ yielded limited data. Approximately 20 small single crystals, immersed in bromobenzene, were mounted in a specially designed Raman tube. The spectra were photographically recorded with the use of a Lane Wells spectrometer and source unit, with exposures ranging from 2 to 72 hr. The OH stretching vibration, corresponding to the symmetric motion of the two groups in the unit cell, was measured as 3617 ± 3 cm^{-1}. Attempts to observe fine structure yielded only two very weak satellites, which could not be measured with precision and could not be unequivocally assigned as arising from the $Ca(OH)_2$ crystals. With the use of the recently extended range of infrared instrumentation (Perkin-Elmer Model 21 with CsBr optics), further work will be performed on this spectrum.

The Infrared Spectra of Cyanic Acid and Thiocyanic Acid

J. R. Lawson[5] H. W. Morgan

The vibrational spectra of HNCS and HNCO have been reported in the literature,[6,7] and force constants have been computed based on certain assumptions.[8] In these molecules the stretching vibrations of the CN and the CX (X = O or S) groups interact strongly, so that the resultant normal modes of motion are not characteristic of the bonds involved. The degree of interaction is sensitive to the force constants and to the masses involved, and thus the substitution of deuterium or of N^{15} would be expected to cause measurable frequency shifts. These, in principle, allow a definite assignment of the fundamental frequencies of these molecules.

The mathematical techniques developed for solving secular equations on the Oracle were used to test the validity of the assumptions used in the reported force constant analyses. The method employed, developed by Torkington, assumed no strong interactions between the normal modes of motion. Since this was not true for these molecules, the two interacting modes were rewritten in terms of an additional parameter, p, which was assumed to contain the degree of interaction. By calculations on the Oracle it was determined that this assumption was reasonable for small values of p, that is for HNCS, but led to serious error for values of p greater than 0.5, including HNCO. The normal coordinate analyses were carried out with the parameter p omitted, and numerous computations were made in order to determine the dependency of the force constants on isotopic frequency shifts and on the structural parameters of the molecule.

Synthesis of the free acids was attempted by many methods which allowed the convenient substitution of deuterium. It was concluded that the best preparation employed the intimate mixing of KSCN (or KOCN) and $KHSO_4$ powders. Reaction occurs only when a trace of moisture is present, and thus by secondary reactions traces of OCS, CO_2, and HCN are found. In one series of experiments it was determined by reaction with $KDSO_4$ that an appreciable fraction of the acid hydrogen came from water in the KSCN. By allowing carefully dried KSCN to absorb D_2O and then mixing it with $KHSO_4$, concentrations of up to 60% DNCS were attained. The difficulties in obtaining high-purity DNCS and DNCO have prevented accurate determinations of the isotope shifts on the single-beam infrared spectrometer. The measurements will be performed on the double-beam spectrometer in the near future.

Infrared Spectra of the Deutero-Substituted Ethyl Alcohols

J. G. Burr[9] H. W. Morgan

The deutero-substituted alcohols CD_3CH_2OH, CH_3CD_2OH, CH_3CHDOH, and CH_3CH_2OD were prepared in high purity and together with CH_3CH_2OH

[4]Chemistry Division.

[5]Research Participant, Tennessee Agricultural and Industrial State College, 1956.

[6]C. Reid, *J. Chem. Phys.* 18, 1512 (1950).

[7]G. Herzberg and C. Reid, *Discussions Faraday Soc.* 9, 92 (1950).

[8]W. J. O. Thomas, *Trans. Faraday Soc.* 49, 855 (1953).

[9]Chemistry Division.

were studied in absorption over the region 2 to 25 μ, with both a single-beam and a double-beam infrared spectrometer. The observed isotope shifts allowed definite assignments to be made for all the stretching modes of vibration. Reasonable assignments were made of the various bending modes. A simplified normal coordinate analysis is now being made in order to obtain approximate values for certain of the force constants and, from the calculation of isotope shifts, to provide verification for the assignments of the bending modes in these molecules.

ATOMIC SPECTROSCOPY

Spectrum of Singly Ionized Plutonium, Pu(II)

J. R. McNally, Jr. P. M. Griffin

A survey of wavelength data on the plutonium spectra has been made available[10] for spectrochemists and for purposes of a preliminary classification of the spectra. Issuance of the report has resulted in additional wavelength data being supplied on 1076 lines by the Zeeman Laboratorium at Amsterdam.[11] The latter data will be incorporated into a revised listing shortly.

More than 330 Zeeman patterns obtained at 24,136 oersteds and with an Echelle spectrograph were computed by Oracle least-square routines developed by Vander Sluis, Griffin, and Vander Sluis.[12] No resolved patterns for any neutral or doubly ionized plutonium spectrum lines were recognized, indicating very marked selectivity of excitation of Pu(II) in low current arcs in magnetic fields. This is analogous to the excitation selectivity for the II spectra of the first rare earths observed by Harrison and others at Massachusetts Institute of Technology using fields as high as 90,000 oersteds.

A preliminary energy level scheme for Pu(II) has been established based on the Zeeman measurements. Table 14 lists the low energy states of Pu(II) determined to date, together with electronic configurations, number of Zeeman patterns analyzed, average Landé g factors, and theoretical Russell-Saunders (LS) and g_{jj} factors. The analogous spectrum, Sm(II), shows much closer LS coupling and fits Merrill's intermediate coupling scheme[13] very exactly.[14] Racah and

[10] J. R. McNally, Jr., *A Survey of Plutonium Spectrum Data*, ORNL-2154 (Aug. 28, 1956).

[11] M. Schenck-Van den Berg, private communication, Nov. 2, 1956.

[12] K. L. Vander Sluis, P. M. Griffin, and J. H. Vander Sluis, *Stable Isotopes Research and Production Semiann. Prog. Rep. Nov. 20, 1955*, ORNL-2028, p 6.

[13] R. A. Merrill, *Phys. Rev.* **46**, 487 (1934).

[14] W. A. Albertson, *Astrophys. J.* **84**, 26 (1936).

TABLE 14. LOW ENERGY LEVELS IN Pu(II)

Term	J	Level (cm^{-1})	Number of Patterns	g_{obs}	g_{LS}	g_{jj}*	g_{LS}**
^8F	$\frac{1}{2}$	0.0	16	3.139	4.000	2.000	4.007
^8F	$\frac{3}{2}$	2015.0	24	1.883	2.000	1.667	2.002
^6F	$\frac{1}{2}$	3235.8	26	0.304	−0.667	1.333	−0.671
^8F	$\frac{5}{2}$	3969.9	19	1.668	1.714	1.600	1.716
^6F	$\frac{3}{2}$	5502.1	20	1.168	1.067	1.400	1.067
^8F	$\frac{7}{2}$	5718.0	13	1.579	1.619	1.571	1.620
^6F	$\frac{5}{2}$	7498.5	7	1.304	1.314	1.429	1.315

*Pure LS is assumed to be in the parent term.

**Based on anomalous g factor correction (see J. R. McNally, Jr., *Stable Isotope Research and Production Semiann. Prog. Rep. Nov. 20, 1955*, ORNL-2028, p 7).

McNally[15] attempted to fit part of this low[6,8] F group to the intermediate coupling scheme but met with limited success presumably because of the impure LS coupling in the parent ion. Additional evidence for impure parent ion coupling is indicated by g sums based on the parent ion term deviating from theoretical (see Table 15).

TABLE 15. g SUMS FOR LOW TERMS IN Pu(II)

J	Σg_{obs}	Σg_{theo}*	$\Delta(\Sigma g)$
½	3.443	3.336	+0.107
3/2	3.051	3.069	−0.018
5/2	2.972	3.031	−0.059

*Pure LS is assumed to be in the parent term.

Table 16 gives pertinent spectroscopic data on high odd-parity energy levels. Levels designated A are based on two or more resolved Zeeman patterns, B indicates one Zeeman pattern plus Ritz combinations, and C indicates one Zeeman pattern or Ritz combinations only. The large number of high levels suggests mixing of several configurations, for example, $5f^6 7p$, $5f^7$, $5f^5 7s^2$, $5f^5 6d 7s$, and possibly states involving the $5g$ electron.

[15]Discussions at Joint Commission for Spectroscopy Meeting, Ohio State University, June 1956.

Ratios of the Nuclear Moments of U^{233} and U^{235}

K. L. Vander Sluis

Interest in the algebraic sign and magnitude of the ratio of the quadrupole moments of U^{233} and U^{235}, for nuclear alignment and alpha emission anisotropy work in the Physics Division, has led to a reinvestigation of uranium hyperfine structure patterns used previously to determine the nuclear spin moments. The transition λ 5915 ($169_7 - {}^5L_6$) was selected for measurement. The assumption (substantiated by the small structure in other transitions to the ${}^5L_6$ level) was made that all the structure was in the 169_7 level.

The components, σ, of the hyperfine pattern are related to the center of gravity, σ_0, of the pattern by the expression

$$(1) \qquad \sigma = \sigma_0 + \frac{A}{2} C + B \frac{3C(C+1)/8 - IJ(J+1)(I+1)/2}{IJ(2I-1)(2J+1)},$$

where

$C = (F+1)F - J(J+1) - I(I+1)$,
$F = |\vec{J} + \vec{I}|$,
$J = 7$ for the level 169_7,
$I = 7/2$ for U^{235},
$= 5/2$ for U^{233},
$A \sim \mu\sqrt{I(I+1)}$, μ = magnetic dipole moment,
$B \sim -Q$, Q = electric quadrupole moment.

TABLE 16. HIGH ENERGY LEVELS IN Pu(II)

Level Quality	Level (cm^{-1})	J	g_{obs}	Level Quality	Level (cm^{-1})	J	g_{obs}
B	22,038.8	½	0.383	A	29,951.9	3/2	1.166
A	24,206.6	3/2	0.897	C	30,057.6	3/2	1.019
A	24,366.0	½	2.413	A	30,193.1	3/2	1.358
A	24,386.9	3/2	0.951	C	30,284.6	3/2	1.00
A	24,700.7	½	2.016	C	30,561.8	½	2.66
C	24,839.7	3/2	0.997	B	30,727.2	3/2	1.202
A	25,064.1	3/2	0.567	A	30,759.4	5/2	1.199
C	25,403.6	5/2	1.026	A	30,794.8	3/2	1.085
C	25,574.0	3/2	1.638	C	30,994.9	½	0.365
B	26,595.0	3/2	1.230	A	30,999.8	3/2	1.694

TABLE 16 (continued)

Level Quality	Level (cm^{-1})	J	g_{obs}	Level Quality	Level (cm^{-1})	J	g_{obs}
B	26,669.8	3/2	1.34	B	31,051.7	5/2	1.182
A	26,766.4	5/2	1.062	B	31,160.0	7/2	0.979
B	26,829.8	1/2	0.000	A	31,197.1	1/2	0.752
A	27,162.2	3/2	1.055	A	31,255.8	3/2	0.917
B	27,165.7	7/2	1.724	B	31,618.1	3, 5, 7/2	1.70
B	27,305.1	5/2	1.045	C	31,778.4	1/2	2.910
A	27,466.1	3/2	1.812	B	32,041.9	3/2	0.964
B	27,523.4	1/2	0.940	B	32,555.6	3/2	1.299
B	27,829.1	5/2	1.204	B	32,557.7	1/2	1.429
A	27,879.1	1/2	0.800	B	32,670.8	5/2	1.351
B	28,110.43	3/2	0.911	A	32,820.8	5/2	1.335
B	28,225.8	7/2	1.187	B	32,900.9	5/2	0.437
A	28,252.8	1/2	0.922	B	33,052.7	1/2	1.15
C	28,398.2	1/2	0.657	A	33,189.6	5/2	1.089
C	28,728.7	3/2	1.157	C	33,619.4	1/2	1.499
B	28,773.1	7/2	1.106	C	33,629.2	5/2	1.239
A	28,801.9	1/2	0.800	B	33,720.8	3/2	1.228
A	28,809.8	5/2	1.251	B	34,048.4	?	0.2 ?
A	29,026.5	5/2	1.115	A	34,077.6	3/2	1.67
A	29,040.0	3/2	1.443	B	34,559.9	3/2	1.153
A	29,197.6	5/2	1.01	A	34,630.6	3/2	1.173
A	29,259.6	3/2	1.254	B	34,844.4	3/2	1.546
A	29,393.8	1/2	0.501	A	34,902.4	7/2	1.17
C	29,783.3	1/2	2.613	C	34,910.8	3/2	1.257
C	35,075.5	3/2	0.32	B	35,902.5	3/2	1.597
A	35,332.2	5/2	1.238	C	36,349.4	5/2	1.695
B	35,431.8	3/2	1.181	B	36,544.9	5/2	1.182
B	35,545.7	1/2	0.928	C	37,104.7	9/2	1.199
A	35,614.1	3/2	1.54	A	37,904.0	7/2	1.243
C	35,659.5	1/2	0.32	C	38,242.5	9/2	1.647
B	35,725.9	1/2	1.547	C	38,358.8	3/2	1.019
B	35,738.7	5/2	0.964	B	38,530.0	5/2	1.243

The constants of proportionality in each case depend upon the wave functions of the energy levels involved. These wave functions are not known; hence the magnitudes of μ and Q can only be approximated. However, since these proportionality constants are invariant with isotope, accurate values of the ratios of these moments may be determined.

In the case of U^{235} the pattern consisted of three resolved components and an unresolved composite of the remaining four components. The measured separations were

$$\sigma_{21/2} - \sigma_{19/2} = 0.0576 \text{ cm}^{-1} ,$$
$$\sigma_{19/2} - \sigma_{17/2} = 0.0445 \text{ cm}^{-1} ,$$
$$\sigma_{17/2} - \sigma_{comp} = 0.0680 \text{ cm}^{-1} .$$

The pattern was completely resolved for U^{233}, and the measurements in this case were

$$\sigma_{21/2} - \sigma_{19/2} = 0.0635 \text{ cm}^{-1} ,$$
$$\sigma_{19/2} - \sigma_{17/2} = 0.0694 \text{ cm}^{-1} ,$$
$$\sigma_{17/2} - \sigma_{15/2} = 0.0689 \text{ cm}^{-1} ,$$
$$\sigma_{15/2} - \sigma_{13/2} = 0.0666 \text{ cm}^{-1} ,$$
$$\sigma_{13/2} - \sigma_{11/2} = 0.0577 \text{ cm}^{-1} .$$

When these data were fitted to Eq. 1, the following values were obtained for the constants A and B:

	A (cm^{-1})	B (cm^{-1})
U^{233}	8.60×10^{-3}	-41.0×10^{-3}
U^{235}	-3.92×10^{-3}	-51.0×10^{-3}

These results permit the conclusion that the magnetic dipole moment of U^{235} is negative in algebraic sign and that the magnetic dipole moment of U^{233} is positive. Independent calculations by Racah and McNally gave a negative value for $3 \cos^2 \theta - 1$, the actual value ranging between -0.2 and -0.4 depending on the coupling assumed for the f^3ds (^4I) state. Thus, the electric quadrupole moment of U^{235} is positive in sign, as is that of U^{233}. Furthermore the desired ratios are

$$\frac{\mu_{233}}{\mu_{235}} = \frac{A_{233}}{A_{235}} \sqrt{\frac{5.7/4}{7.9/4}} = -1.6 ,$$

$$\frac{Q_{233}}{Q_{235}} = \frac{B_{233}}{B_{235}} = +0.80 .$$

Zeeman Spectroscopy

P. M. Griffin K. L. Vander Sluis

Work has continued on the study of the spectrum of tellurium. Observations of the zero field and of the Zeeman spectrum of Te(II) in the wavelength range 2600 to 9200 Å are progressing.

The source of a serious systematic error in wavelength measurements made with an Echelle-Littrow spectrograph was uncovered. It was found that any reasonable plate holder curve would cut the target pattern of the instrument at different positions relative to a "true focal curve." By "true focal curve" is meant that curve which intersects the target pattern in such a manner that the position peak density of spectrum lines of known wavelengths will lead to a single value for the calculated grating constant. By disregarding lines appearing at the ends of the plate and measuring only the middle 170 mm of the plate, results are obtained which exhibit errors that are consistent with the limitations of the method of measurement.

APPLIED SPECTROSCOPY

Analytical Summary

Z. Combs H. W. Dunn
J. J. Mundzak P. A. Staats
J. A. Norris S. J. Ovenshine

A total of 1,578 samples comprising 16,600 determinations was completed by spectrochemical, x-ray, and infrared methods of analysis.

Rare-Earth Spectrochemical Development

S. J. Ovenshine J. A. Norris

Preliminary results on the "spark-in-spray" method[16] show no better reproducibility than the regular porous-cup method and thus far show much greater variations in intensity from exposure to exposure.

X-Ray Analytical Development

W. F. Peed H. W. Dunn

The limits of detection of several elements have been determined for application to problems such as analysis of oxide films from metals. In the case of uranium, 40 μg is readily detectable, whereas, for elements in the atomic number range

[16] H. V. Malmstadt and R. G. Scholz, *Anal. Chem.* **27**, 881 (1955).

26 (Fe) through 42 (Mo), less than 5 μg is detectable.

The investigation of x-ray fluorescence as a method of analysis of yttrium previously reported[17] has been extended. It has been determined that the concentration range in solutions from 1 to 30 g/liter can be analyzed with a precision of 1% of the amount of yttrium present with uranium used as an internal standard. Thorium and elements of the rare-earth group do not interfere. The method can be extended to higher concentration with no difficulty; however, lower concentrations of yttrium can be analyzed with less precision. Solid samples of concentration range 1.0 to 100% Y_2O_3 can be analyzed with the same precision, ±1% of the amount present; lower concentrations can likewise be analyzed less precisely. Time required per analysis is less than 15 min.

Optical Development

G. K. Werner F. R. Duncan[18]

A problem encountered in reactor design involving a gamma-ray collimator was referred to the Spectroscopy Group, since such a problem could be solved by optical analog. The problem involved a determination of the tolerances in alignment that need be held in a collimator system consisting of two 1-in.-dia holes 6 in. long and spaced 400 in. apart in order for the transmission of radiation through the holes to be within 1% of the value obtained with perfect alignment and of the method that can be used to achieve the alignment and to check the alignment after the system is in operation and is sealed off and radioactive at one end.

By mathematical analysis it was found that the effective aperture of a single 6-in. cylinder is reduced by 1% at any point 1.2 in. off axis in a perpendicular plane 400 in. from the cylinder. Since the second cylinder receives radiation over a 1-in. circular area instead of at a point, a similar integration was made graphically with a planimeter. This showed that a 1-in. circle in the plane 400 in. from the first cylinder receives 1% less than maximum radiation if its center is 1 in. off axis. This corresponds to a 9-min angle of the arc. These computations were confirmed by photographic and photoelectric measurements of a full-size analogous optical system.

It was concluded that the allowable error would be reached if either cylinder were rotated by an angle of 9 min or if one element were displaced parallel to its correct position by ½ in.

Since these tolerances could be met without great difficulty, it was recommended that normal precision surveying techniques be used to check alignment. A simple pinhole type of jig was designed to aid in the initial alignment.

Electronic Development

O. B. Rudolph

An a-c–d-c power supply for arc or spark operation and with automatic starter for analytical gap use was designed, fabricated, and tested. The circuit diagram is given in Fig. 22.

Redesign of a 4-kc square-wave generator for microwave spectroscopy and also of a 150-Mc power oscillator for gaseous tube excitation is nearing completion.

X-RAY SPECTROSCOPY

Germanium Internal Bremsstrahlung

W. F. Peed H. W. Dunn
G. L. Rogosa[19]

Attempts to measure internal bremsstrahlung associated with the electron capture decay of Ge^{71} were unsuccessful due to low luminosity of the x-ray spectrometer. The luminosity was found to be 10^{-9} based on the fluorescence yield of 30%, on the absorption in the sample estimated at 50%, and on the known activity of the sample.

Gamma background was approximately 100 counts/sec, and the K line intensity of the daughter Ga^{71} was about 500 counts/sec; internal bremsstrahlung intensity was below the limits of detection.

X-Ray Diffraction

H. W. Dunn

A report[20] recently issued contains x-ray diffraction data for 74 uranium compounds, making it possible for project personnel to identify these compounds when they are encountered. It is expected that these data will be published sometime in 1957 in the ASTM data cards so that they will become available to the general scientific public.

[17] W. F. Peed, *Stable Isotopes Semiann. Prog. Rep. May 20, 1956*, ORNL-2114, p 9.

[18] Instrumentation and Controls Division.

[19] Consultant, Florida State University, Tallahassee; now with U. S. Atomic Energy Commission, Washington, D. C.

[20] H. W. Dunn, *X-Ray Diffraction Data for Some Uranium Compounds*, ORNL-2092 (Aug. 2, 1956).

UNCLASSIFIED
ORNL-LR-DWG 17534

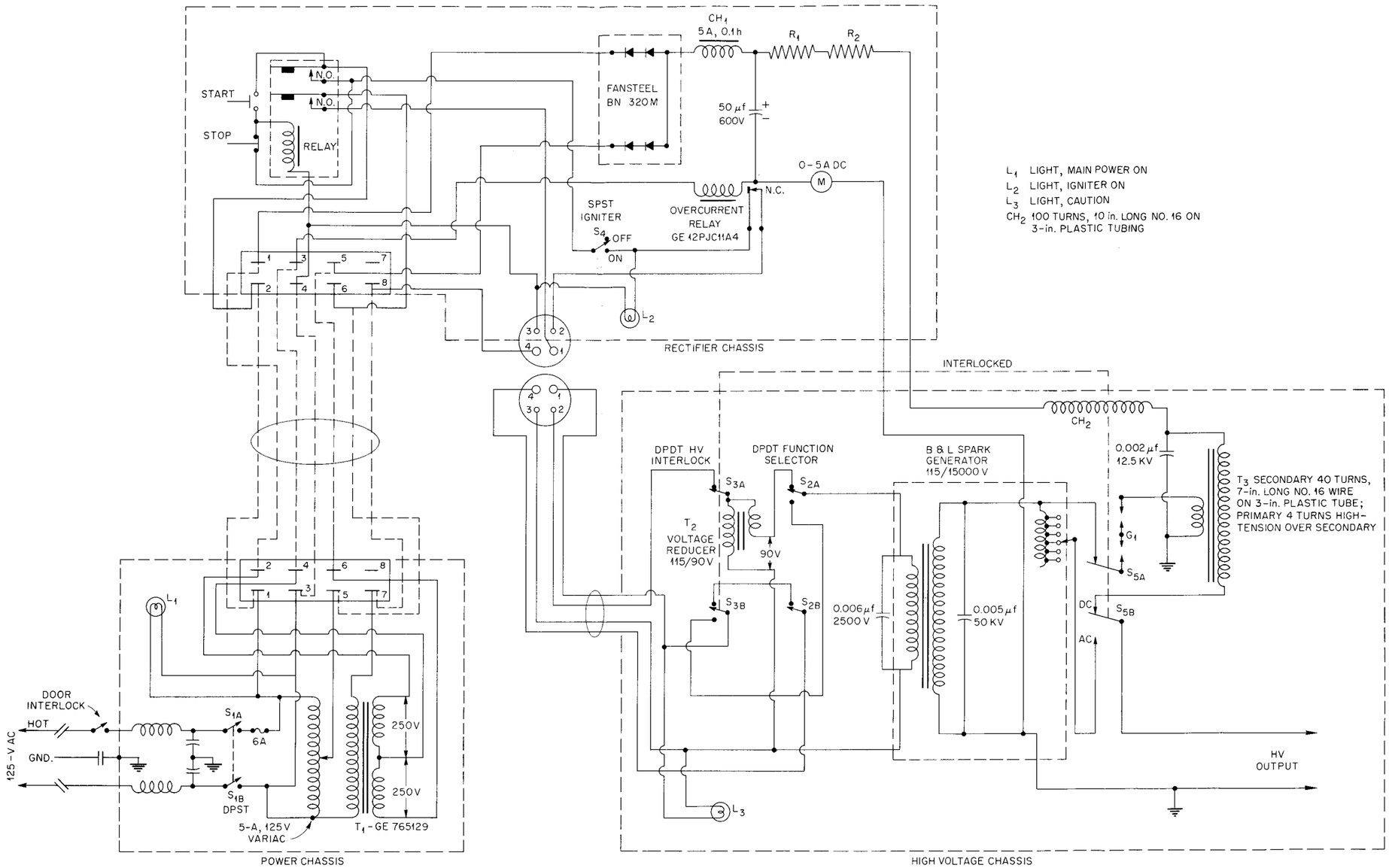

Fig. 22. Circuit Diagram of A-C–D-C Arc Power Supply with Automatic D-C Arc Starter.

STABLE ISOTOPE DISTRIBUTION

P. S. Baker P. V. Arow

The transition from a loan policy, exclusively, to a sale-or-loan policy[1] for domestic users of enriched stable isotopes has been proceeding relatively smoothly, with one significant change in policy having been introduced since inception. Whereas it was originally planned that all loans would entail a use charge of 4% per annum, it has now been decided by the Commission that on-project users will not be required to pay this fee. The handling and assay charges, however, are still applicable.

As was anticipated, the number of users desiring to purchase isotopes is far greater than the number requesting loans. For the past three months, during which time the new loan policy was in full effect, there have been 121 sales and 19 loans, whereas a year ago there were no domestic sales but 91 loans during the comparable three-month period. Table 17 shows a monthly comparison of the sales and loans for the period June 1, 1956, through November 30, 1956.

[1]P. S. Baker, *Stable Isotopes Semiann. Prog. Rep. May 20, 1956*, ORNL-2144, p 39.

Table 18 indicates the distribution of shipments as well as the shipments by months for this same period. It will be noted that those shipments requiring special services again make up about 12% of the total. Furthermore, the number of off-project users, including foreign, continues to exceed the number of on-project users. The number of foreign shipments is less than for the previous period. During the period, 15 off-project and 14 foreign organizations became new customers for enriched stable isotopes.

On October 29, 1956, a letter from S. R. Sapirie of the Oak Ridge Operations Office of the Atomic Energy Commission was sent to each borrower holding stable isotopes obtained under the former loan policy on Form AEC-100. They were offered the following options, to be effected within 90 days from the date of the letter or from the date of expiration of the loan period, whichever is later:

1. to purchase any or all of the loaned items at the current catalog price less the $50.00 loan fee already paid; title to items listed at $50.00 or less is to be transferred automatically to

TABLE 17. COMPARISON OF SALES AND LOANS – JUNE 1, 1956, THROUGH NOVEMBER 30, 1956

Month	Sales	Loans	Ratio (Sales/Loans)	Cumulative Ratio (Sales/Loans)
June	33	10	3.3	3.3
July	52	16	3.3	3.3
August	46	15	3.1	3.2
September	20	7	2.9	3.2
October	39	6	6.5	3.5
November	62	6	10.3	4.2
Total	252	60		

the holder without further cost in the case of Federal agencies, and by submission of amended Form AEC-391 by non-Government agencies;

2. to return items held on loan, in which case information called for on Form OR-629, "Certificate of Isotope Accountability," is to be supplied;

3. to renegotiate the loans under the new loan procedure.

In response to this letter, many isotopes are being returned, and it is anticipated that a large number of lots will be received over the next few months. These returns are requiring considerable effort in the revision of records, chemical reprocessing, chemical analysis, and mass analysis before the returned isotopes can be replaced in stock.

Table 19 is a detailed list of the isotope shipments during the period from June 1, 1956, through November 30, 1956. Since September 1, 1956, the tabulation of boron and lithium shipments (other than those involving electromagnetically enriched material) has been kept separately, and the data are not considered in compiling the general information already mentioned. The boron and lithium shipments since September 1, 1956, are given in Table 20.

TABLE 18. TOTAL SHIPMENTS OF ISOTOPES – JUNE 1, 1956, THROUGH NOVEMBER 30, 1956

Month	On-Project	Off-Project	Foreign	Total	Targets and Special Services
June	15	17	11	43	5
July	25	40	3	68	10
August	34	20	7	61	3
September	7	10	10	27	3
October	17	18	10	45	3
November	28	36	4	68	11
Total	126	141	45	312	35

TABLE 19. SUMMARY OF ISOTOPE SHIPMENTS – JUNE 1, 1956, THROUGH NOVEMBER 30, 1956

Request No.	Requester	Isotope	Lot	Quantity (mg)
404	Naval Research Laboratory	Cu^{63}	FJ 673(a)	100
407-S	Oak Ridge National Laboratory (Stelson)	Mo^{100}	HF 895(a)	150
408	Bartol Research Foundation	Hg^{202}	DR 490(b)	10
409	Massachusetts Institute of Technology	Ca^{48}	FF 653(a)	35
410*	Bell Telephone Laboratories	Ti^{48}	GA 754(a)	1,000
411-S*	Oak Ridge National Laboratory (Zucker)	Mg^{24}	DZ 519(a)	543
412-S*	Oak Ridge National Laboratory (Zucker)	Mg^{25}	HM 929(a)	513
413-S*	Oak Ridge National Laboratory (Zucker)	Mg^{26}	HM 930(a)	384
414-S	Brookhaven National Laboratory	Te^{122}	DX 506(a)	4
415	Carnegie Institution of Washington	Gd^{156}	GK 801(a)	15
416-S	Argonne National Laboratory	Pt^{192}	GH 777(a)	3
419-S*	Brookhaven National Laboratory	Li^{6}	SS 5(a)	4,400
420-S*	Brookhaven National Laboratory	Li^{7}	Special	5,000
431-S*	Brookhaven National Laboratory	Li^{7}	Special	10,000
417-S	Los Alamos Scientific Laboratory	Rb^{85}	GX 862(a)	1,000
418-S	Los Alamos Scientific Laboratory	Rb^{87}	RS 50(a)	500
421	University of Leeds, England	B^{10}	SS 1(b)	3,700
422	Tata Institute, India	B^{10}	SS 1(b)	7,400
423	Tata Institute, India	B^{10}	DAG-1	30,000
424	Tata Institute, India	B^{11}	SS 2(b)	3,700
425	University of Michigan	Ni^{64}	GT 848(a)	200
426	University of Michigan	Fe^{54}	FN 685(b)	200
427	University of Michigan	Zr^{96}	GQ 835(a)	100
428-S	Argonne National Laboratory	Li^{6}	SS 5(a)	20,000
429	University of Michigan	B^{10}	SS 1(a)-46	2,000
430	Illinois Institute of Technology	B^{10}	SS 1(a)-46	2,000
432	The Rice Institute	Fe^{54}	E 14(a)	20
433-S	Oak Ridge National Laboratory (Harvey)	Eu^{151}	HL 926(a)	500
434-S	Oak Ridge National Laboratory (Harvey)	Eu^{153}	HL 927(a)	500
435	Ohio State University	Ga^{69}	EI 554(a)	50
436	Ohio State University	Ga^{71}	RS 26(a)	50
438*	Yale University	Li^{6}	SS 5(a)	21,000
439	Institute for Theoretical Physics, Copenhagen	Sm^{149}	GM 816(a)	10
440	Institute for Theoretical Physics, Copenhagen	Eu^{151}	HL 926(a)	25

*Special services (see P. S. Baker and F. R. Duncan, *Stable Isotopes Research and Production Semiann. Prog. Rep. Nov. 20, 1955*, ORNL-2028, p 43).

TABLE 19 (continued)

Request No.	Requester	Isotope	Lot	Quantity (mg)
441	Institute for Theoretical Physics, Copenhagen	Eu^{153}	HL 927(a)	25
442	Institute for Theoretical Physics, Copenhagen	Gd^{158}	GK 803(a)	25
443	Institute for Theoretical Physics, Copenhagen	Gd^{160}	GK 804(a)	25
444	Institute for Theoretical Physics, Copenhagen	Re^{185}	CP 356(a)	25
445	University of Illinois	Pb^{208}	AQ 138(a)	800
446-S	Phillips Petroleum Co.	Te^{125}	HC 879(b)	200
447	Manchester College (X-10 for irradiation)	Sn^{120}	FS 717(a)	20
448-S*	Oak Ridge National Laboratory (Zucker)	Mg^{24}	DZ 519(a)	3
449-S*	Oak Ridge National Laboratory (Zucker)	Mg^{25}	HM 929(a)	4
450-S*	Oak Ridge National Laboratory (Zucker)	Mg^{25}	HM 929(a)	450
451	University of California (Berkeley)	W^{180}	CL 340(ar)	10
452-S	Brookhaven National Laboratory	Li^{6}	SS 5(a)	15,000
453-S	Brookhaven National Laboratory	Mg^{26}	HM 930(a)	25
454-S	Brookhaven National Laboratory	W^{183}	RS 55(a)	500
455-S	Brookhaven National Laboratory	Eu^{151}	HL 926(a)	600
456-S	Brookhaven National Laboratory	Eu^{153}	HL 927(a)	600
457-S*	Oak Ridge National Laboratory (McGowan)	Ag^{109}	RS 52(a)	200
458	University of Wisconsin	Li^{6}	FY 745(bd)	530
459	University of Wisconsin	Li^{7}	CE 767(l)	100
460-S	Oak Ridge National Laboratory (Murray)	Li^{7}	FI 668(d)	20,000
461	National Research Council (Canada)	B^{10}	SS 1(a)	10,000
462	Radiation Counter Lab, Inc.	B^{10}	SS 1(b)	150,000 (complex)
463-S	General Electric Company	B^{10}	SS 1(a)-42	100,000
464	Massachusetts Institute of Technology	B^{10}	SS 1(b)	10,000 (complex)
465	George A. Work	B^{10}	SS 1(b)	20,000 (complex)
466	N. Wood Counter Laboratory	B^{10}	SS 1(b)	400,000
467	The Harshaw Chemical Co.	Li^{6}	SS 5(a)	50,000
468	Illinois Institute of Technology	Hg^{201}	DR 489(b)	5
469*	Bell Telephone Laboratories	Ti^{46}	HK 921(a)	1,000
470*	Bell Telephone Laboratories	Ti^{50}	HK 925(a)	1,000
471-S*	Los Alamos Scientific Laboratory	Zr^{90}	RS 198(c)	9,946
				(grams)
472-S*	Los Alamos Scientific Laboratory	Zr^{91}	RS 199(c)	3.000
473-S*	Los Alamos Scientific Laboratory	Zr^{92}	RS 200(b)	4.672

*Special services.

TABLE 19 (continued)

Request No.	Requester	Isotope	Lot	Quantity (grams)
474-S*	Los Alamos Scientific Laboratory	Zr^{94}	RS 201(d)	4.273
475-S*	Los Alamos Scientific Laboratory	Pt^{194}	GA 778(a)	5.996
476-S	Oak Ridge National Laboratory (Peed)	Ge^{70}	HP 938(a)	0.139
477-S	Oak Ridge National Laboratory (Binder)	B^{10}	SS 1(a)-42	100.000
478-S	Oak Ridge National Laboratory (Norris)	Ni^{58}	GT 844(a)	1.100
480	University of Arkansas	Mo^{92}	RS 6(c)	0.020
481	University of Arkansas	Mo^{94}	FP 696(a)	0.014
482	University of Arkansas	Mo^{96}	AW 166(a)	0.020
483	University of Arkansas	Mo^{98}	AW 168(a)	0.035
484	University of Arkansas	Mo^{100}	AW 169(a)	0.020
485-S	Oak Ridge National Laboratory (Lyon)	Ge^{70}	BD 205-210(a)	0.020
486-S	Oak Ridge National Laboratory (Lyon)	Ge^{74}	BD 208-213(a)	0.020
487-S	Oak Ridge National Laboratory (Lyon)	Ge^{76}	BD 209-214(a)	0.020
488-S	Oak Ridge National Laboratory (Lyon)	Cr^{53}	GZ 870(a)	0.020
489-S	Phillips Petroleum Co.	Nd^{145}	GI 786(a)	0.500
490-S	Phillips Petroleum Co.	Gd^{157}	GK 802(a)	0.500
491-S	Phillips Petroleum Co.	Sm^{149}	GM 816(a)	0.423
492-S	Phillips Petroleum Co.	In^{113}	ER 594(a)	0.727
493	Massachusetts Institute of Technology	B^{10}	SS 1(ac)	0.175
494	Massachusetts Institute of Technology	Sr^{88}	HG 901(a)	0.100
496	Massachusetts Institute of Technology	Sr^{87}	HG 900(a)	0.040
497-S	Ames Laboratory	W^{182}	HN 932(a)	0.500
498-S	Ames Laboratory	W^{186}	RS 57(a)	0.500
499-S	Oak Ridge National Laboratory (Harmatz)	Re^{187}	CP 357(a)	0.020
500	McMaster University	K^{41}	EI 626(e)	0.005
501-S	Oak Ridge National Laboratory (Gillette)	Ni^{58}	GT 844(a)	0.500
503	Bell Telephone Laboratories	Si^{28}	IA 973(a)	5.000
504	Massachusetts Institute of Technology	Sm^{152}	RS 156(a)	0.100
505	Massachusetts Institute of Technology	Se^{82}	FG 659(a)	0.050
506	University of Michigan	Eu^{151}	HL 926(a)	0.030
507	University of Michigan	Eu^{153}	HL 927(a)	0.030
508	Minerais, Alliages, Produits, Chimiques (France) (MAPCI)	B^{10}	SS 1(a)-42	100.000
509	Columbia University	B^{10}	SS 1(a)-42	620.000

*Special services.

TABLE 19 (continued)

Request No.	Requester	Isotope	Lot	Quantity (grams)
510	University of Pennsylvania	Hg^{202}	RS 37(b)	0.005
511*	Brown University	Sn^{116}	FS 713(a)	0.508
512*	Brown University	Sn^{120}	EC 534(a)	0.517
513	Brown University	Sb^{121}	RS 70(a)	0.300
514	North American Aviation, Inc.	B^{10}	DAG-1	2.000
515	Naval Research Laboratory	Ru^{104}	GJ 796(a)	0.020
516	Naval Research Laboratory	Pd^{110}	GG 775(a)	0.020
517	Indiana University	Pb^{206}	AQ 136(a)	0.040
518	Indiana University	Pb^{207}	RS 123(b)	0.040
519	Indiana University	Pb^{208}	EQ 584(a)	0.060
520-S*	Oak Ridge National Laboratory (Blosser)	Pb^{208}	EO 584(a)	0.150
521	Robertshaw-Fulton	B^{10}	DAG-1	5.000
522	Bartol Research Foundation	W^{184}	HN 934(a)	0.050
523	Sarabhai Agencies	B^{10}	SS 1(b)	150.000
524-S	Ames Laboratory	Li^{6}	HE 887(a)	2.000
525	Johns Hopkins University	Hg^{204}	RS 38(c)	0.005
526-S	University of California Radiation Laboratory	Cd^{116}	RS 65(a)	0.025
528	California Institute of Technology	Ca^{44}	FG 692(a)	0.005
529	California Institute of Technology	K^{41}	RS 48(d)	0.005
530	California Institute of Technology	Rb^{87}	GX 863(a)	0.005
531	California Institute of Technology	Sr^{86}	FL 680(a)	0.007
532	California Institute of Technology	Pb^{208}	EO 584(a)	0.020
533	California Institute of Technology	Pb^{206}	EO 582(a)	0.010
534	Washington University	B^{11}	SS 2(ba)	1.000
495	The Rice Institute	Cu^{65}	DU 498(a)	0.025
537-S	University of California Radiation Laboratory	Cu^{63}	FJ 673(a)	0.100
538-S	University of California Radiation Laboratory	Cu^{65}	DU 498(a)	0.100
535	Massachusetts Institute of Technology	Ni^{58}	FJ 669(a)	0.100
536	Massachusetts Institute of Technology	Ni^{60}	GT 845(a)	0.100
539	Columbia University	B^{10}	SS 1(a)-42	25.000
540	University of Michigan	Sm^{152}	RS 156(a)	0.050
541	University of Michigan	Nd^{146}	RS 43(a)	0.040
542-S	University of California Radiation Laboratory	Ni^{60}	GT 845(a)	2.500
543-S	University of California Radiation Laboratory	Ni^{62}	GT 847(a)	2.500

*Special services.

TABLE 19 (continued)

Request No.	Requester	Isotope	Lot	Quantity (grams)
544-S	University of California Radiation Laboratory	Fe^{54}	FN 685(b)	2.500
545-S	University of California Radiation Laboratory	Ni^{58}	GT 844(a)	2.500
546-S	University of California Radiation Laboratory	Fe^{56}	AZ 184(a)	2.500
547	N. V. Philips-Roxane, Amsterdam, Holland	B^{10}	SS 1(b)	50.000
548	Bryant and Heffernan, Inc.	B^{10}	SS 1(b)	200.000
549	University of Rochester	Li^{6}	HE 887(a)	0.500
550	University of Rochester	Li^{6}	SS 5(b)	0.500
552-S	Argonne National Laboratory	Li^{6}	SS 5(b)	0.100
553-S	Argonne National Laboratory	B^{10}	DAG-1	20.000
554-S	Oak Ridge National Laboratory (Harmatz)	Gd^{155}	GK 800(a)	0.025
555-S	Oak Ridge National Laboratory (Block)	Sm^{147}	GM 814(a)	0.200
556-S	Los Alamos Scientific Laboratory	B^{10}	DAG-1	10.000
557-S	Brookhaven National Laboratory	Nd^{145}	GI 786(a)	0.854
558-S	Brookhaven National Laboratory	Gd^{155}	GK 800(a)	0.866
559-S	Brookhaven National Laboratory	Ag^{107}	HO 936(b)	0.800
560-S	Brookhaven National Laboratory	Ag^{109}	HO 937(a)	0.800
561-S	Brookhaven National Laboratory	Nd^{143}	GI 784(a)	0.859
562-S	Brookhaven National Laboratory	Gd^{157}	GK 802(a)	0.868
563-S	Brookhaven National Laboratory	Sm^{149}	GM 816(a)	0.862
564-S	Brookhaven National Laboratory	Hf^{179}	GP 829(a)	0.849
565-S	Brookhaven National Laboratory	Hf^{177}	GP 827(a)	0.848
566-S	Los Alamos Scientific Laboratory	Rb^{85}	GX 862(a)	1.000
567-S	Los Alamos Scientific Laboratory	Rb^{87}	GX 863(a)	0.500
568-S	Oak Ridge National Laboratory (Vander Sluis)	Te^{130}	CA 299(a)	0.025
569-S	Oak Ridge National Laboratory (Block)	Sm^{149}	GM 816(a)	0.200
383	Centre National de la Recherche Scientifique (CNRS) (France)	Cd^{111}	RS 61(a)	0.040
570-S	Oak Ridge National Laboratory (Harmatz)	Gd^{156}	GK 801(a)	0.025
571-S	Ames Laboratory	Cr^{52}	HA 872(a)	0.200
572-S	Ames Laboratory	Cr^{53}	GZ 870(a)	0.100
573	California Institute of Technology	Sr^{84}	EH 548(a)	0.002
574	CNRS (France)	B^{10}	SS 1(b)	560.000
575-S	Argonne National Laboratory	B^{10}	SS 1(a)-42	1.000
577-S*	Brookhaven National Laboratory	Li^{6}	SS 5(a)	1.6

*Special services.

TABLE 19 (continued)

Request No.	Requester	Isotope	Lot	Quantity (grams)
578-S*	Brookhaven National Laboratory	Li^7	FI 668(k)	1.8
527	Max Planck Institute (Germany)	Li^6	SS 5(a)	1.0
579	Massachusetts Institute of Technology	Ag^{107}	HO 936(c)	0.030
580	Massachusetts Institute of Technology	Ag^{109}	RS 52(b)	0.050
581	Massachusetts Institute of Technology	Sn^{117}	RS 185(a)	0.080
582	Massachusetts Institute of Technology	Sn^{118}	RS 186(a)	0.100
583	University of Michigan	B^{10}	SS 1(a)-42	3.0
584-S	Oak Ridge National Laboratory (Leddicotte)	B^{10}	SS 1(b)	10.0 (complex)
585-S	Oak Ridge National Laboratory (Gillette)	S^{33}	CX 392(a)	0.030
586	National Research Council (Canada)	Cd^{114}	RS 64(a)	0.050
587	Princeton University	Mg^{24}	DZ 519(a)	0.050
588	Princeton University	Si^{28}	AI-AJ 103-106(a)	0.050
589	Princeton University	B^{10}	SS 1(a)-42	2.0
590	Princeton University	B^{11}	SS 2(ba)-1	1.0
591-S	Oak Ridge National Laboratory (Harmatz)	Gd^{160}	GK 804(a)	0.020
592*	Westinghouse Research Laboratory	Hg^{202}	DR 490(b)	0.0029
593-S	Argonne National Laboratory	Ti^{48}	EN 578(a)	13.6
594-S	Oak Ridge National Laboratory (Warlick)	W^{186}	RS 57(a)	0.100
595	Belgian Embassy	B^{10}	SS 1(a)-42	4.0
596	California Institute of Technology	Sm^{150}	FH 664(a)	0.050
597	Columbia University	Ca^{48}	CS 375(a)	0.004
601*	Westinghouse Electric Corp.	Cr^{50}	GS 840(a)	3.878
602*	Westinghouse Electric Corp.	Cr^{54}	GS 839(c)	2.882
603*	Westinghouse Electric Corp.	Ni^{60}	FJ 670(a)	5.417
604-S	Oak Ridge National Laboratory (Harmatz)	Gd^{158}	GK 803(a)	0.030
605-S	Los Alamos Scientific Laboratory	W^{186}	RS 57(a)	0.050
606-S	Oak Ridge National Laboratory (Harmatz)	Sm^{147}	HI 908(a)	0.035
607	University of Michigan	Se^{77}	FG 656(e)	0.010
608	University of Chicago	K^{41}	EY 626(e)	0.050
609	Université de Neuchatel, Switzerland	K^{40}	EX 622(u)	0.0022
610-S	Ames Laboratory	Li^7	GE 767(l)	0.100
613	Universitat Zurich	Li^7	FI 668(k)	0.200
615	General Electric Company	Te^{130}	CA 299(a)	1.0
616	Indiana University	Pb^{207}	EO 583(a)	0.040

*Special services.

TABLE 19 (continued)

Request No.	Requester	Isotope	Lot	Quantity (grams)
617	Uppsala University, Sweden	Sb^{121}	BT 274(a)	0.005
618	Uppsala University, Sweden	Re^{185}	CP 356(a)	0.010
622-S	Oak Ridge National Laboratory (Harmatz)	Gd^{152}	GK 798(a)	0.061
625	Universitat Heidelberg	Gd^{152}	GK 798(a)	0.002
626	Universitat Heidelberg	Gd^{154}	GK 799(a)	0.005
627	Universitat Heidelberg	Gd^{156}	GK 801(a)	0.008
628	Universitat Heidelberg	Gd^{158}	GK 803(a)	0.008
629	Universitat Heidelberg	Gd^{160}	GK 804(a)	0.008
630	Universitat Heidelberg	Zr^{91}	EE 540(a)	0.040
631	Stanford University	Si^{28}	AI-AJ 103-106(a)	0.100
632	Stanford University	S^{32}	ES 596(a)	0.100
633	The Rice Institute	Eu^{151}	HL 926(a)	0.050
634-S	Brookhaven National Laboratory	Dy^{161}	IB 979(a)	2.002
635-S	Brookhaven National Laboratory	Dy^{163}	IB 981(a)	1.786
639-S	Oak Ridge National Laboratory (Gillette)	S^{33}	HH 903(a)	0.010
640	California Institute of Technology	Ba^{135}	DG 432(a)	0.020
642-S	Brookhaven National Laboratory	Eu^{151}	HL 926(a)	2.0
643-S	Brookhaven National Laboratory	Eu^{153}	HL 927(a)	2.0
644	Naval Research Laboratory	Zn^{64}	RS 13(a)	0.050
645	Naval Research Laboratory	Zn^{66}	EK 557(a)	0.025
646	Naval Research Laboratory	Zn^{67}	RS 15(a)	0.010
647	Naval Research Laboratory	Zn^{68}	BN 243(a)	0.025
648	Naval Research Laboratory	Zn^{70}	EK 560(a)	0.010
649	Naval Research Laboratory	Ga^{69}	EI 554(a)	0.030
650	Naval Research Laboratory	Ga^{71}	RS 26(a)	0.020
655-S	Brookhaven National Laboratory	Sr^{86}	FL 680(a)	0.100
656	Commissariat á l'Energie Atomique (CEA) (France)	Hg^{204}	RS 38(c)	0.010
658	Bartol Research Foundation	Pt^{196}	GH 780(a)	0.050
660-S	Oak Ridge National Laboratory (Gillette)	Cr^{50}	GS 840(a)	0.100
661-S	Brookhaven National Laboratory	Eu^{151}	HL 926(a)	0.030
662-S	Brookhaven National Laboratory	Eu^{153}	HL 927(a)	0.030
663	Universitat Marburg	W^{180}	HN 931(a)	0.003
664	Universitat Marburg	Ca^{46}	GV 859(a)	0.020
665	Universitat Marburg	Ba^{130}	FU 727(a)	0.010

TABLE 19 (continued)

Request No.	Requester	Isotope	Lot	Quantity (grams)
666	Bartol Research Foundation	Cr^{50}	GS 840(a)	0.025
667	Carnegie Institution of Washington	Pt^{194}	GH 778(a)	0.020
668	Carnegie Institution of Washington	Pt^{195}	GH 779(a)	0.020
669-S*	Oak Ridge National Laboratory (Gibbons)	Sr^{86}	HG 899(a)	2.715
670-S*	Oak Ridge National Laboratory (Gibbons)	Sr^{88}	FL 682(a)	3.876
671-S*	Oak Ridge National Laboratory (Gibbons)	Rb^{85}	GX 862(a)	3.668
672-S	Oak Ridge National Laboratory (Vander Sluis)	Zn^{68}	EK 559(a)	0.009
673	The Rice Institute	Ti^{46}	RS 191(a)	0.025
674	The Rice Institute	Ti^{48}	BF 217(a)	0.025
675	Tata Institute, India	Eu^{151}	HL 926(a)	0.050
676	Tata Institute, India	Eu^{151}	HL 926(b)	0.050
677	Tata Institute, India	Eu^{153}	HL 927(a)	0.050
678	Tata Institute, India	Eu^{153}	HL 927(b)	0.050
681-S	Oak Ridge National Laboratory (Harmatz)	Dy^{160}	IB 978(b)	0.020
683-S	Oak Ridge National Laboratory (O'Kelley)	Zr^{90}	EE 539(a)	0.100
684-S	Oak Ridge National Laboratory (Macklin)	Ce^{142}	FR 709(a)	0.020
685-S	Oak Ridge National Laboratory (Macklin)	Re^{185}	CP 356(a)	0.020
686-S	Oak Ridge National Laboratory (Macklin)	Re^{187}	CP 357(a)	0.020
687-S	Oak Ridge National Laboratory (Macklin)	Sm^{154}	GM 819(a)	0.020
688	Netherlands Embassy	Pd^{108}	GG 774(a)	0.015
691	The Rice Institute	Ca^{40}	EY 613(a)	0.025
692	The Rice Institute	Ca^{44}	FF 651(a)	0.010
693	The Rice Institute	Ge^{74}	FE 750(a)	0.025
694	The Rice Institute	Zn^{64}	AG 97(a)	0.025
695	Atomic Energy of Canada, Ltd.	Hg^{202}	DR 490(d)	0.020
696-S*	Oak Ridge National Laboratory (Livingston)	Ca^{43}	RS 78(a)	0.002
697	Abbott Laboratories	Ti^{50}	HK 925(a)	0.005
698-S	Oak Ridge National Laboratory (Gillette)	Cr^{50}	GS 840(a)	0.200
700*	Bell Telephone Laboratories	Ge^{74}	FZ 750(a)	17.0
701-S	Argonne National Laboratory	Nd^{148}	EQ 592(a)	0.015
702-S	Argonne National Laboratory	Nd^{150}	RS 45(a)	0.015
703-S	Argonne National Laboratory	Sm^{154}	GM 819(a)	0.015
704-S	Argonne National Laboratory	Gd^{160}	GK 804(a)	0.015
706	University of California (Berkeley)	Ni^{60}	GT 846(a)	0.002

*Special services.

TABLE 19 (continued)

Request No.	Requester	Isotope	Lot	Quantity (grams)
707-S	Brookhaven National Laboratory	Dy^{162}	IB 980(a)	2.0
708	Columbia University	Ni^{58}	GT 844(a)	0.100
709	University of California (Berkeley)	Gd^{155}	GK 800(a)	0.005
710-S	University of California Radiation Laboratory	W^{186}	BG 224(a)	0.010
715	Sylvania Electric Products, Inc.	Mo^{97}	HF 893(a)	0.010
716	University of California (Berkeley)	Fe^{57}	GU 853(a)	0.002
717	Universitat Bonn	Gd^{152}	GK 798(a)	0.002
718	Universitat Bonn	Hf^{174}	GP 825(a)	0.002
719	Massachusetts Institute of Technology	Sm^{152}	EM 573(a)	0.100
723-S	Los Alamos Scientific Laboratory	Ti^{48}	GA 754(b)	1.50
726-S	Argonne National Laboratory	Cu^{63}	FJ 673(a)	0.010
727-S	Argonne National Laboratory	Cu^{65}	DU 498(a)	0.010
728-S	Argonne National Laboratory	Ga^{69}	EI 554(a)	0.010
729-S	Argonne National Laboratory	Ga^{71}	RS 26(a)	0.010
730-S*	Oak Ridge National Laboratory (Cohen)	Pb^{206}	EO 582(a)	0.076
731-S*	Oak Ridge National Laboratory (Cohen)	Pb^{207}	BO 259(a)	0.050
732-S	Argonne National Laboratory	Ni^{58}	GT 844(a)	0.100
736	Bryant and Heffernan, Inc.	Mg^{25}	HM 929(c)	0.010
737	University of California (Berkeley)	Hf^{176}	GP 826(a)	0.015
738	University of California (Berkeley)	Gd^{157}	GK 802(a)	0.005
739	University of California (Berkeley)	Eu^{151}	HL 926(a)	0.005
740	University of Washington	Ca^{40}	EV 613(a)	0.050
741	University of Washington	Ni^{58}	GT 844(a)	0.050
742	University of Washington	Ti^{46}	GA 752(a)	0.030
744-S	Oak Ridge National Laboratory (Lyon)	Ge^{74}	BD-BE 208-213(a)	0.020
745-S	Oak Ridge National Laboratory (Lyon)	Ge^{76}	BD-BE 209-214(a)	0.025
746	University of California (Berkeley)	Hf^{178}	GP 828(a)	0.020
747	University of California (Berkeley)	Hf^{180}	GP 830(a)	0.020
748-S	University of California Radiation Laboratory	Te^{130}	CA 299(a)	0.025
749-S	University of California Radiation Laboratory	In^{113}	CQ 358(a)	0.005
750	Max Planck Institute (Germany)	Ru^{102}	GJ 795(a)	0.050
751	Max Planck Institute (Germany)	Ru^{104}	GJ 796(a)	0.025
753-S	Oak Ridge National Laboratory (Harmatz)	Gd^{160}	GK 804(a)	0.026
754-S*	Oak Ridge National Laboratory (Gibbons)	K^{41}	GN 822(a)	1.605

*Special services.

TABLE 19 (continued)

Request No.	Requester	Isotope	Lot	Quantity (grams)
755	Wright Air Development Center	Mg^{24}	P 47(a)	0.060
756	Wright Air Development Center	Mg^{25}	HM 929(c)	0.060
757	Wright Air Development Center	Mg^{26}	HM 930(b)	0.060
758	Wright Air Development Center	Si^{28}	Al-AJ 103-106(a)	0.060
759	Wright Air Development Center	Si^{29}	EB 525(a)	0.030
760	Wright Air Development Center	S^{33}	HH 903(a)	0.005
761	Wright Air Development Center	Cl^{35}	FW 736(a)	0.050
762	Wright Air Development Center	Cl^{37}	FW 737(a)	0.025
763	Wright Air Development Center	K^{39}	EY 624(i)	0.020
764	Wright Air Development Center	K^{41}	EY 626(e)	0.020
765	Wright Air Development Center	V^{51}	FB 633(a)	0.100
766	Wright Air Development Center	Fe^{56}	AZ 184(a)	0.200
767	Wright Air Development Center	Ni^{60}	GT 845(a)	0.100
768	Wright Air Development Center	Cu^{63}	DF 426(a)	0.050
769	Wright Air Development Center	Cu^{65}	GT 850(a)	0.050
770	Wright Air Development Center	Zn^{64}	RS 13(a)	0.050
771	Wright Air Development Center	Zn^{67}	RS 15(a)	0.050
772	Wright Air Development Center	Zn^{68}	BK 243(a)	0.050
773	Wright Air Development Center	Zn^{70}	EK 560(a)	0.070
775-S*	Oak Ridge National Laboratory (Gibbons)	K^{39}	GN 830(a)	2.000
776-S*	Oak Ridge National Laboratory (McGowan)	Sn^{116}	EC 530(a)	0.174
777-S*	Oak Ridge National Laboratory (McGowan)	Sn^{118}	EC 532(a)	0.150
778-S*	Oak Ridge National Laboratory (McGowan)	Sn^{120}	EC 534(a)	0.150
779-S*	Oak Ridge National Laboratory (McGowan)	Sn^{122}	RS 189(a)	0.150
780-S*	Oak Ridge National Laboratory (McGowan)	Sn^{124}	FS 719(a)	0.150

*Special services.

TABLE 20. SUMMARY OF LITHIUM AND BORON SHIPMENTS (OTHER THAN ELECTROMAGNETICALLY SEPARATED) – JUNE 1, 1956, THROUGH NOVEMBER 30, 1956

Request No.	Requester	Isotope	Lot	Quantity (g)
598	U.S. Naval Powder Factory	B^{10}	SS 1(b)	10.0 (complex)
599	Y-12 (Burkhart)	B^{10}	DAG-1	4.0
600	Universitat Zurich	Li^{6}	SS 5(b)	0.200
611-S	Oak Ridge National Laboratory (Callihan)	B^{10}	SS 1(a)-42	1300.0
612-S*	Argonne National Laboratory	Li^{6}	SS 5(a)	875.0
614-S*	Y-12 (Burkhart)	B^{10}	SS 1(ac)	34.3 (acid)
619*	Massachusetts Institute of Technology	B^{10}	SS 1(ac)	2.0 (acid)
620	Guntherand Tegetmeyer	B^{10}	SS 1(b)	200.0 (complex)
623	General Electric Company	B^{10}	SS 1(a)-44	100.0
624	N. Wood Counter Laboratory	B^{10}	SS 1(b)	400.0 (complex)
636	Anton Electronic Laboratories, Inc.	B^{10}	SS 1(b)	3.710
637	Tata Institute, India	B^{10}	SS 1(b)	3.710
638	High Voltage Engineering Corp.	Li^{6}	SS 5(b)	2.0
641	California Institute of Technology	Li^{6}	SS 5(bc)	0.500
651	University of Wisconsin	B^{10}	SS 1(ac)	10.0 (acid)
652	University of Wisconsin	B^{10}	SS 1(a)-42	5.0
653	University of Wisconsin	B^{11}	SS 2(b)	15.0 (complex)
654-S	Brookhaven National Laboratory	Li^{6}	SS 5(a)	25.0
657	Naval Research Laboratory	B^{10}	DAG-1	7.0
659	University of Minnesota	B^{10}	SS 1(b)	52.0 (complex)
679	Leeds & Northrup Company	B^{10}	DAG-1	1.0
680	Leeds & Northrup Company	B^{10}	SS 1(a)-42	1.0
682	General Electric Company	B^{10}	SS 1(a)-44	100.0
689	U.S. Naval Powder Factory	B^{10}	SS 1(b)	100.0 (complex)
690	Westinghouse Electric Corp.	B^{10}	SS 1(a)-42	10.0
699	Radiation Counter Lab, Inc.	B^{10}	SS 1(b)	50.0 (complex)
705	Rockefeller Institute of Medical Research	Li^{6}	SS 5(b)	0.5
711	Syracuse University	B^{10}	SS 1(a)-44	4.0
712-S	Argonne National Laboratory	B^{10}	SS 1(a)-44	20.0
713	Columbia University	B^{10}	DAG-1	0.426
714	Sylvania Electric Products, Inc.	B^{10}	SS 1(a)-44	1.0
720	Sylvania Electric Products, Inc.	B^{10}	SS 1(ac)	1.0 (acid)
721	Sylvania Electric Products, Inc.	B^{10}	SS 1(b)	1.0 (complex)

*Special services.

TABLE 20 (continued)

Request No.	Requester	Isotope	Lot	Quantity (g)
722	The Babcock & Wilcox Co.	B^{10}	SS 1(b)	10.0 (complex)
724-S	Los Alamos Scientific Laboratory	B^{10}	SS 1(b)	10.0 (complex)
725-S	Los Alamos Scientific Laboratory	B^{11}	SS 2(b)	10.0 (complex)
733	Bryant and Heffernan, Inc.	B^{10}	SS 1(a)-44	50.0
734	Bryant and Heffernan, Inc.	Li^{6}	SS 5(a)	1.0
735	Bryant and Heffernan, Inc.	B^{10}	SS 1(b)	2.0 (complex)
743	University of Washington	B^{10}	SS 1(a)	1.0
752-S	Argonne National Laboratory	Li^{6}	SS 5(ac)	20.0 (acid)
774-S*	Oak Ridge National Laboratory (Taylor)	Li^{6}	SS 5(a)	4.5
781	Reuter-Stokes Electronic Components, Inc.	B^{10}	SS 1(b)	300.0 (complex)

*Special services.