UNCLASSIFIED

ORNL-2381
Physics and Mathematics

HIGH ENRICHMENT OF URANIUM-235

B. Harmatz
H. C. McCurdy
F. N. Case
R. S. Livingston

ORNL TECHNICAL INFORMATION DIVISION
Y-12 TECHNICAL LIBRARY
Document Reference Section

LOAN COPY ONLY

Do NOT transfer this document to any other person. If you want others to see it, attach their names, return the document, and the Library will arrange the loan as requested.

K RIDGE NATIONAL LABORATORY
OPERATED BY
NION CARBIDE NUCLEAR COMPANY
Division of Union Carbide and Carbon Corporation
UCC
POST OFFICE BOX X · OAK RIDGE, TENNESSEE

RECEIVED
OCT 30 1957
Lawrence Division Y-12
Technical Library Document
Reference Section

UNCLASSIFIED

Printed in USA. Price 75 cents. Available from the

Office of Technical Services
U. S. Department of Commerce
Washington 25, D. C.

LEGAL NOTICE

This report was prepared as an account of Government sponsored work. Neither the United States, nor the Commission, nor any person acting on behalf of the Commission:

A. Makes any warranty or representation, express or implied, with respect to the accuracy, completeness, or usefulness of the information contained in this report, or that the use of any information, apparatus, method, or process disclosed in this report may not infringe privately owned rights; or

B. Assumes any liabilities with respect to the use of, or for damages resulting from the use of any information, apparatus, method, or process disclosed in this report.

As used in the above, "person acting on behalf of the Commission" includes any employee or contractor of the Commission to the extent that such employee or contractor prepares, handles or distributes, or provides access to, any information pursuant to his employment or contract with the Commission.

ORNL 2381

Contract No. W-7405-eng-26

ELECTRONUCLEAR RESEARCH DIVISION

HIGH ENRICHMENT OF URANIUM-235

B. Harmatz
H. C. McCurdy
F. N. Case
R. S. Livingston

Date Issued

OCT 28 1957

OAK RIDGE NATIONAL LABORATORY
Operated by
UNION CARBIDE NUCLEAR COMPANY
A Division of Union Carbide and Carbon Corporation
Post Office Box X
Oak Ridge, Tennessee

INTERNAL DISTRIBUTION

1. C. E. Center
2. Biology Library
3. Health Physics Library
4-5. Central Research Library
6. Reactor Experimental Engineering Library
7-26. Laboratory Records Department
27. Laboratory Records, ORNL R.C.
28. A. M. Weinberg
29. L. B. Emlet (K-25)
30. J. P. Murray (Y-12)
31. J. A. Swartout
32. E. H. Taylor
33. E. D. Shipley
34. A. S. Householder
35. C. P. Keim
36. W. H. Jordan
37. G. E. Boyd
38. S. C. Lind
39. F. L. Culler
40. R. S. Livingston
41. A. H. Snell
42. A. Hollaender
43. M. T. Kelley
44. J. H. Frye, Jr.
45. K. Z. Morgan
46. T. A. Lincoln
47. C. S. Harrill
48. D. W. Cardwell
49. D. Phillips
50. M. L. Nelson
51. J. A. Lane
52. R. A. Charpie
53. M. J. Skinner
54. R. R. Dickison
55. P. S. Baker
56. F. T. Howard
57. L. O. Love
58. H. C. McCurdy
59. M. B. Marshall
60. J. A. Martin
61. H. E. Seagren
62-67. F. N. Case
68-74. B. Harmatz
75. R. F. Christy (consultant)
76. E. Creutz (consultant)
77. L. P. Smith (consultant)
78. R. L. Thornton (consultant)
79. J. A. Wheeler (consultant)
80. ORNL - Y-12 Technical Library, Document Reference Section

EXTERNAL DISTRIBUTION

81. R. F. Bacher, California Institute of Technology
82. R. F. Hibbs, Union Carbide Nuclear Company (Y-12 Plant)
83. Division of Research and Development, AEC, ORO
84-608. Given distribution as shown in TID-4500 (13th ed.) under Physics and Mathematics category (75 copies - OTS)

ABSTRACT

This report summarizes the results from three programs for the production of highly enriched uranium-235 by the electromagnetic process. Products and enrichments obtained are: (1) 80 grams of 99.9% U^{235}, (2) 1100 grams of 99.7% U^{235}, and (3) 8 grams of 99.994% U^{235}. These materials have been made available for use on Atomic Energy Commission projects. An analysis of certain features of the process is made for its possible use in the separation of mass fractions 233 and 235 from 232, 234, and 236.

TABLE OF CONTENTS

		Page
I.	Introduction	1
II.	Summary of U^{235} Separations	3
III.	Analysis of Calutron Performance	7
IV.	Experimental Investigations	10
V.	Evaluation of Equipment	14
VI.	Acknowledgments	19
Appendix A:	Definitions of Process Parameters	20
Appendix B:	Distribution of Enriched U-235 in Collectors, Project A	22

I. Introduction

One of the principal reasons for continued interest in the electromagnetic process for the separation of high-purity isotopes* is the many interesting research applications of the products. If very pure U^{235} is made available, certain nuclear properties of U^{235}, Th^{231}, and Np^{235} can be measured to exact requirements. Interference from small amounts of U^{234} is the main source of error in observing the fine structure of the alpha-particle spectrum of U^{235}. The highly enriched isotope can also be used in the preparation of synthetic standards for high precision isotope analysis.

The possible application of mass-spectrographic enrichment to the salvaging of high-burnup reactor fuel is of increasing importance. The process can be used to separate the spent fuel into its constituents, yielding a premium fissionable material and, as by-products, the (n, γ) and $(n, 2n)$ reaction products in enriched form.

The major feature of the "Beta" calutron used in the special separation of isotopes of the heavy elements on a laboratory scale are shown in the schematic drawing, Fig. 1.

---

*Martin, J. A., F. N. Case, and V. O. Haynes, Catalog of the Isotopes of the Heavy Elements, ORNL-2141, September 1956.

UNCLASSIFIED
PHOTO 6-3071

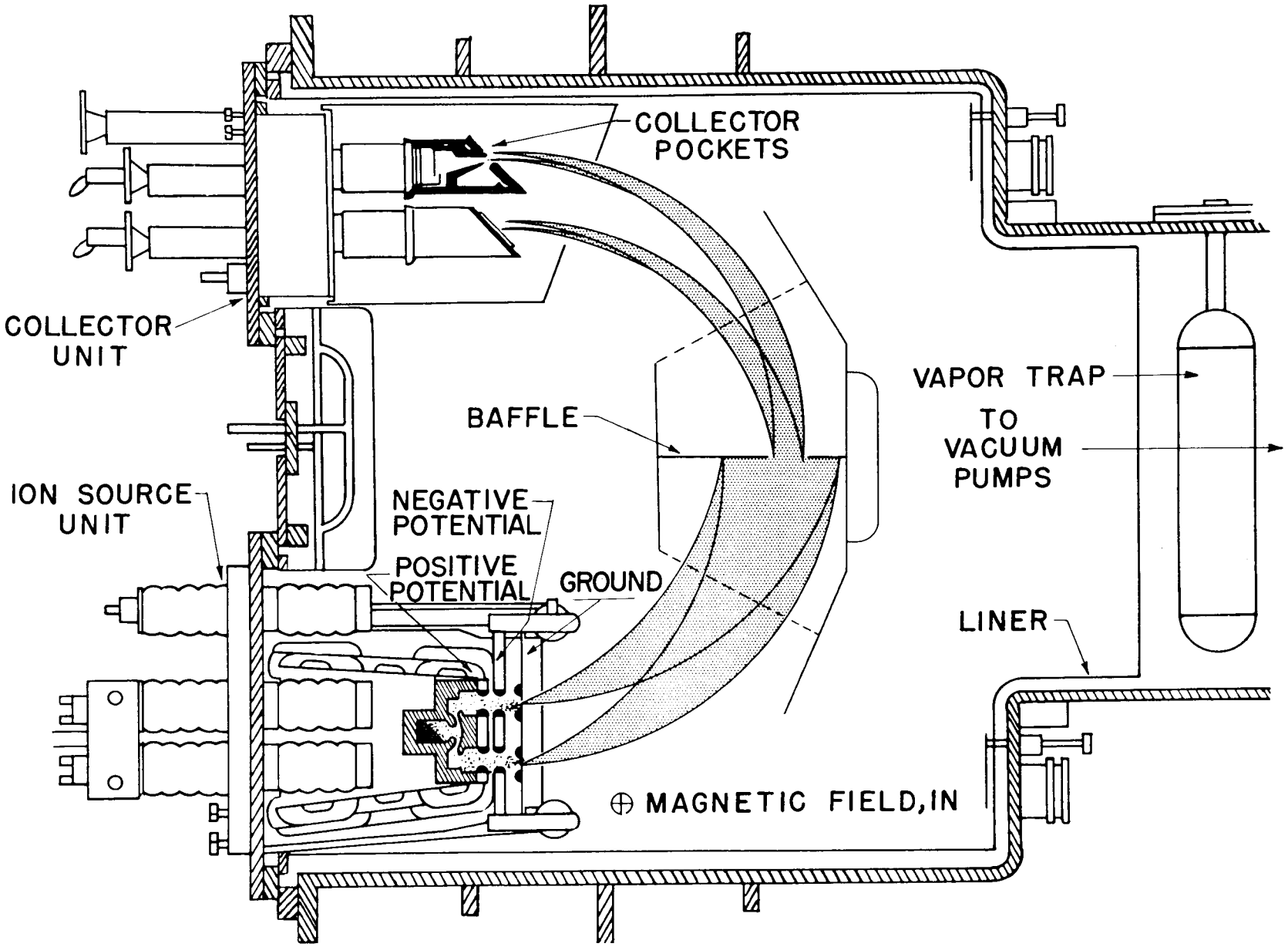

Fig. 1. Major Features of the Beta Calutron.

II. Summary of U^{235} Separations

Three different isotope separation projects have yielded high-purity U^{235}. Project A was designed to yield highly enriched U^{235}. Project B was actually the first stage of a U^{236} enrichment program*; the U^{235} was a by-product. In Project C some of the U^{235} product from Project B was reprocessed especially to reduce the U^{234} content. The feed and product concentrations are summarized in Tables I and II.

Table I. Isotopic Analyses of Feed Materials, (wt %)

Project	U-235	U-238	U-234	U-236
A	94.6	5.2	0.22	---
B	91.9	5.9	1.2	1.0
C	99.8	0.10	0.03	0.06

Table II. Isotopic Analyses of U^{235} Yield (wt %)

Project	U-235	U-238	U-234	U-236	Total Product U-235(g)
A	99.90	0.07	0.03	---	83
B	99.72	0.14	0.06	0.08	1125
C	99.994	0.001	0.0013**	0.004	8

* Harmatz, B., H. C. McCurdy, F. N. Case, and R. S. Livingston, Enrichment of Uranium-236, ORNL Report 1169, December 1951.

** A. Ghiorso of University of California Radiation Laboratory determined the U^{234} content by alpha pulse-height analysis.

The relative alpha activity of U^{235} is charted through two stages of enrichment in Fig. 2. The disposition of feed material in the separation process is shown in the flow chart of Fig. 3. The collection of all mass fractions of appreciable abundance and the multiple recycling of limited amounts of unresolved feed material are pertinent to each program. The efficiency of recovery of the unseparated fraction of U^{235} for reuse was, in project B, 99.3% of the throughput.

UNCLASSIFIED
ORNL-LR-DWG 23708

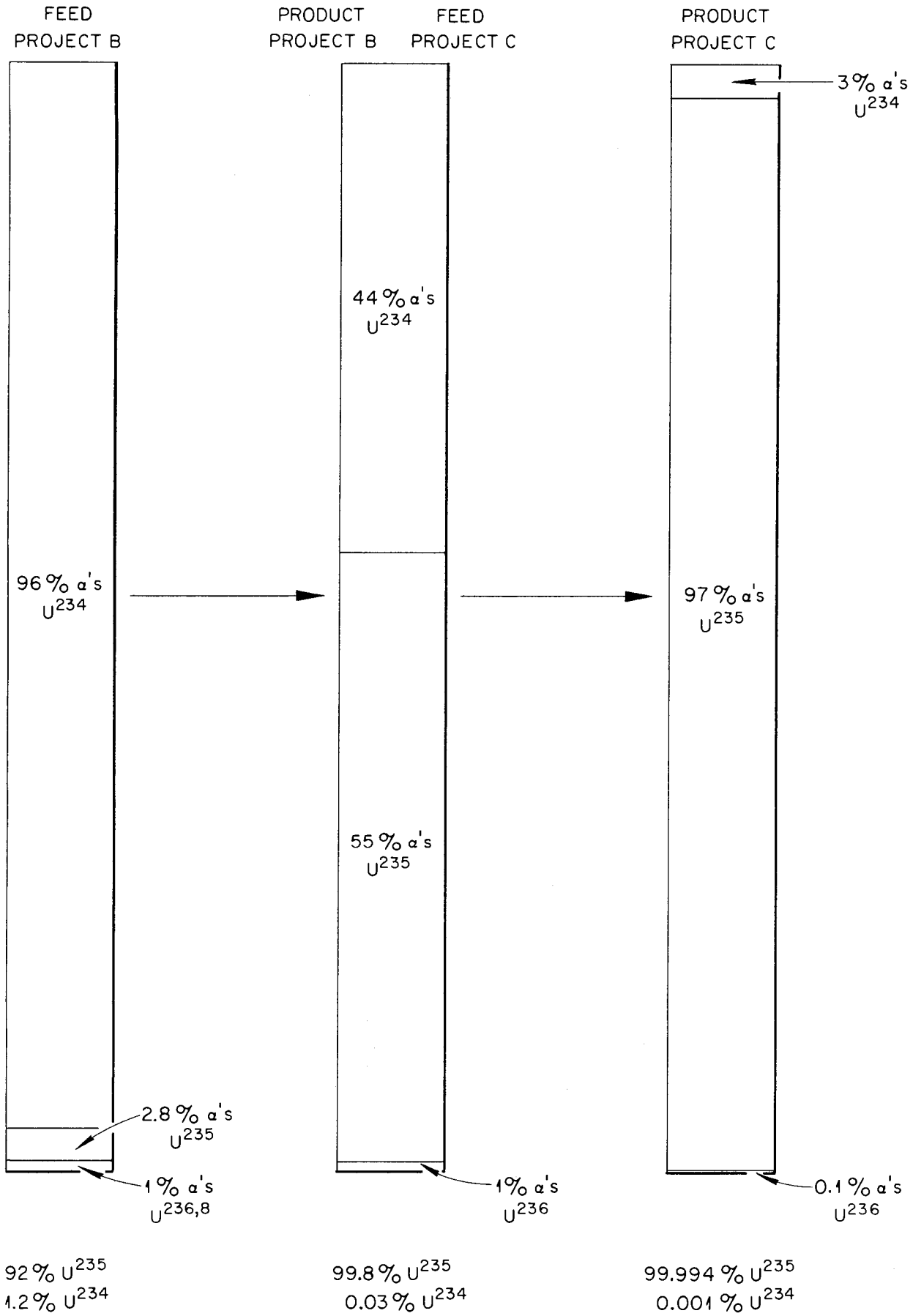

Fig. 2. The Reduction of U^{234} Alpha Activity in Enriched U^{235}

UNCLASSIFIED
ORNL-LR-DWG 23709

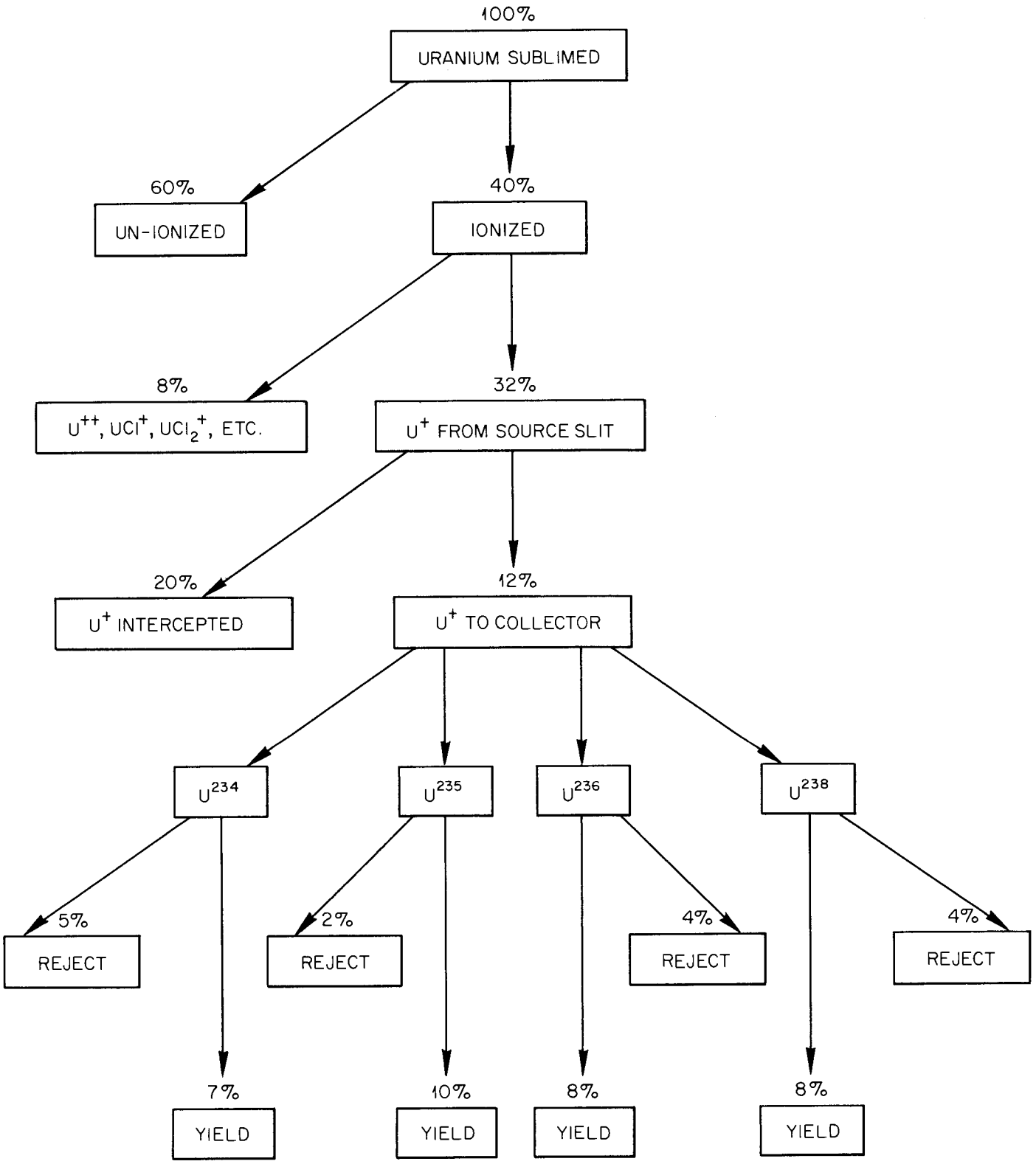

Fig. 3. Distribution of Uranium in the Separation Process, Project C.

III. Analysis of Calutron Performance

Electromagnetic process parameters may be changed, within the limitations of the equipment, to meet the objectives of a program. Collectors are fashioned to favor enhancement and retention of selected isotopes; the angular width of the beam is baffled to vary yield inversely with enrichment; and the ion source geometry is designed to effect changes in feed rate and ion current. The dependencies of yield, enhancement, and process efficiency on the angular width of the beam and the collector slot width are summarized in Table III; these parameters are defined in Appendix A.

As the angular range, collector slot width, and the quantity of feed material were decreased, a trend was observed towards lower rates of vaporization of uranium tetrachloride in the ion source. The relation of achieved enhancement to production rate is charted in Fig. 4. Since the ion source exit slits were all 7/16 x 6 3/4 in., the chart is extended to include performance of the production calutrons which used similar slits.

Table III. Calutron Performance and Associated Geometries

U^+ Current (ma)	Per Arc Vapor Flow Rate (gm U/hr)	Efficiency (%)	Enhancement of U^{235}: U-234	U-236	U-238	Collector Slot Width (mu*)	Baffle Aperture (deg)
95	4.1	20	2.6	---	71	1.33	±10
67	3.8	16	8.5	---	78	0.75	+7, -5
35	3.2	10	35	24	90	0.50	+6, -2

* Mass unit (mu) is defined as the distance along the source-collector line between adjacent mass peaks. For the Beta calutron, 1 m u = 0.1 inch.

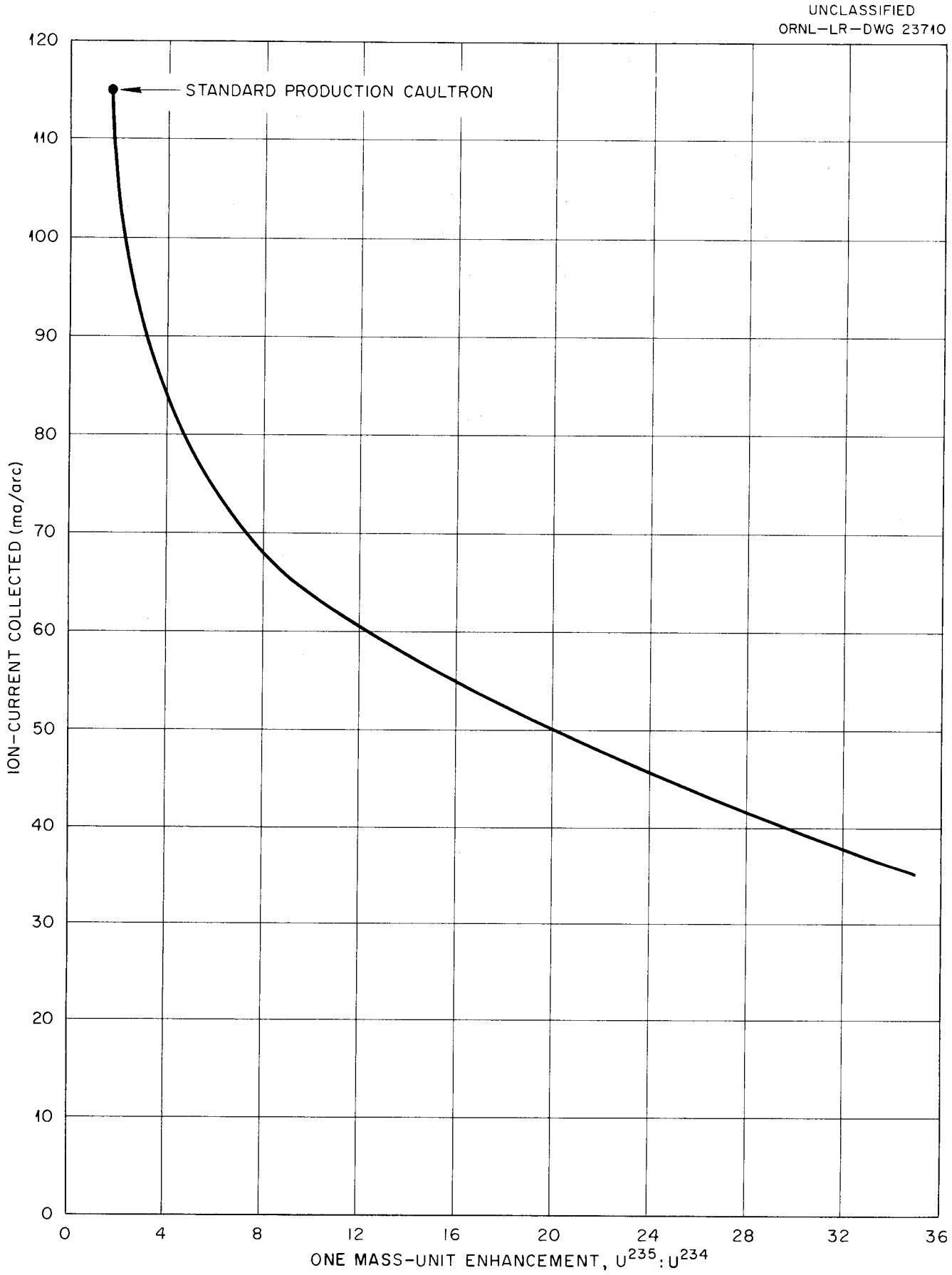

Fig. 4. The Increase in One-Mass-Unit Enhancement as the Ion Current is Reduced by Limiting the Width of the Beam

IV. Experimental Investigations

Focal Distribution of Isotopes

The focal patterns for the various isotopes at the collector slots are the same except for an intensity factor and relative displacement. A typical ion current density distribution observed by sweeping the beam across a 1/32-in. collector slot is illustrated in Fig. 5. The beam pattern exhibits a characteristic skewness toward the next lower mass. Mainly because of this asymmetry, enhancement factors favor the isotope with the greater mass.

In a special test the collector pockets were divided into five equal segments, in the direction of the magnetic field, thus sampling five equal segments of the beam. Sections extending from the center, C, of the segmented collector towards the cathode are designated 1K, 2K and towards the anode as 1AK, 2AK. The distribution of isotopes observed is shown in Table IV. Analysis of the segments indicates that shortening the arc slit and/or the collector slot is desirable for high purity.

Table IV. Isotope Distribution Along the Magnetic Field at the Focal Plane

	2K	1K	C	1AK	2AK
Intensity distribution (%)	5	28	29	26	12
Enhancement U^{235}: U^{238}	30	55	47	55	43
U^{235}: U^{234}	0.9	1.6	2.0	2.2	0.9

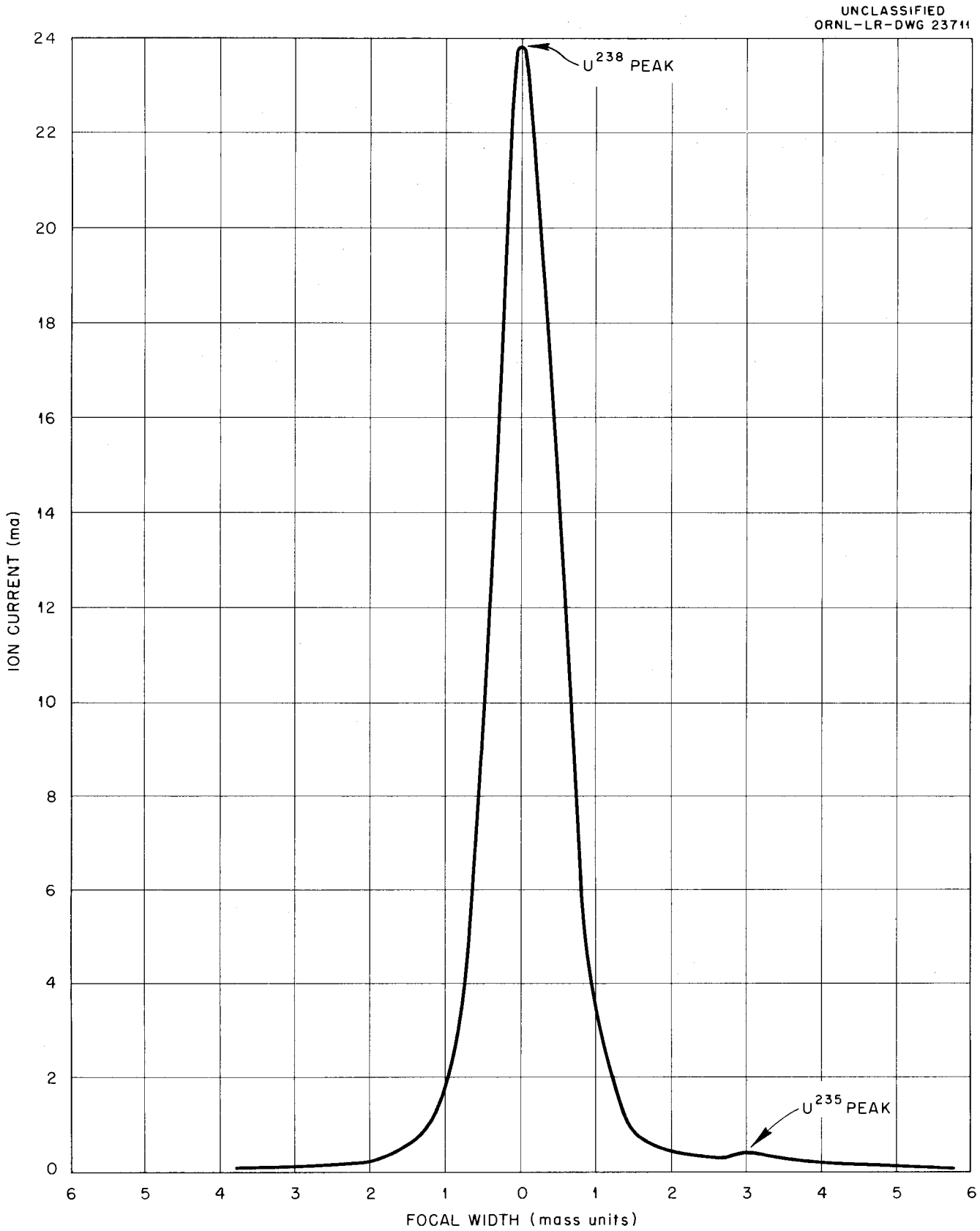

Fig. 5. The Focal Pattern Obtained by Moving a 100-ma U^+ Beam of ± 12 deg Angular Divergence Across a $^1/_{32}$-by 9-in. Collector Slot.

Angular Distribution of Ion Current

The width of the focal pattern of the beam is quite sensitive to the range of angles at which ion trajectories to the collector deviate from the normal orbit. Large-angle trajectories contribute most to the spreading of the beam shape. This dependence of enhancement on angular width of the beam is charted in Fig. 6.

The natural geometric focusing at the 180-deg position is markedly improved by the linear magnetic shims attached to the walls of the calutron vacuum tanks. These shims introduce other less desired components of force, however. For the negative angles, see Fig. 1, the force is toward the median plane; for positive angles, away. This effect is shown by the distribution of deposits obtained in a five-segment collector, Table V.

Table V. Distribution of Current in the Beam

Angular Range (deg)	Ion Current (ma)	Intensity Distribution (%)					N* U^{235}: U^{238}				
		2K	1K	C	1AK	2AK	2K	1K	C	1AK	2AK
0 to -11	50	1	17	45	34	3	24	48	60	60	33
0 to +13	61	6	23	27	25	19	25	58	57	53	41

* N = enhancement

In the choice of angular range, use of the positive angles is favored for two reasons. Since the positive angle beam is more uniformly distributed along the collector slot, defining edges tend to less wear; this is reflected in higher enhancement. In addition, positive-ion trajectories strike surfaces deeper in the small collector pockets, thus favoring better retention.

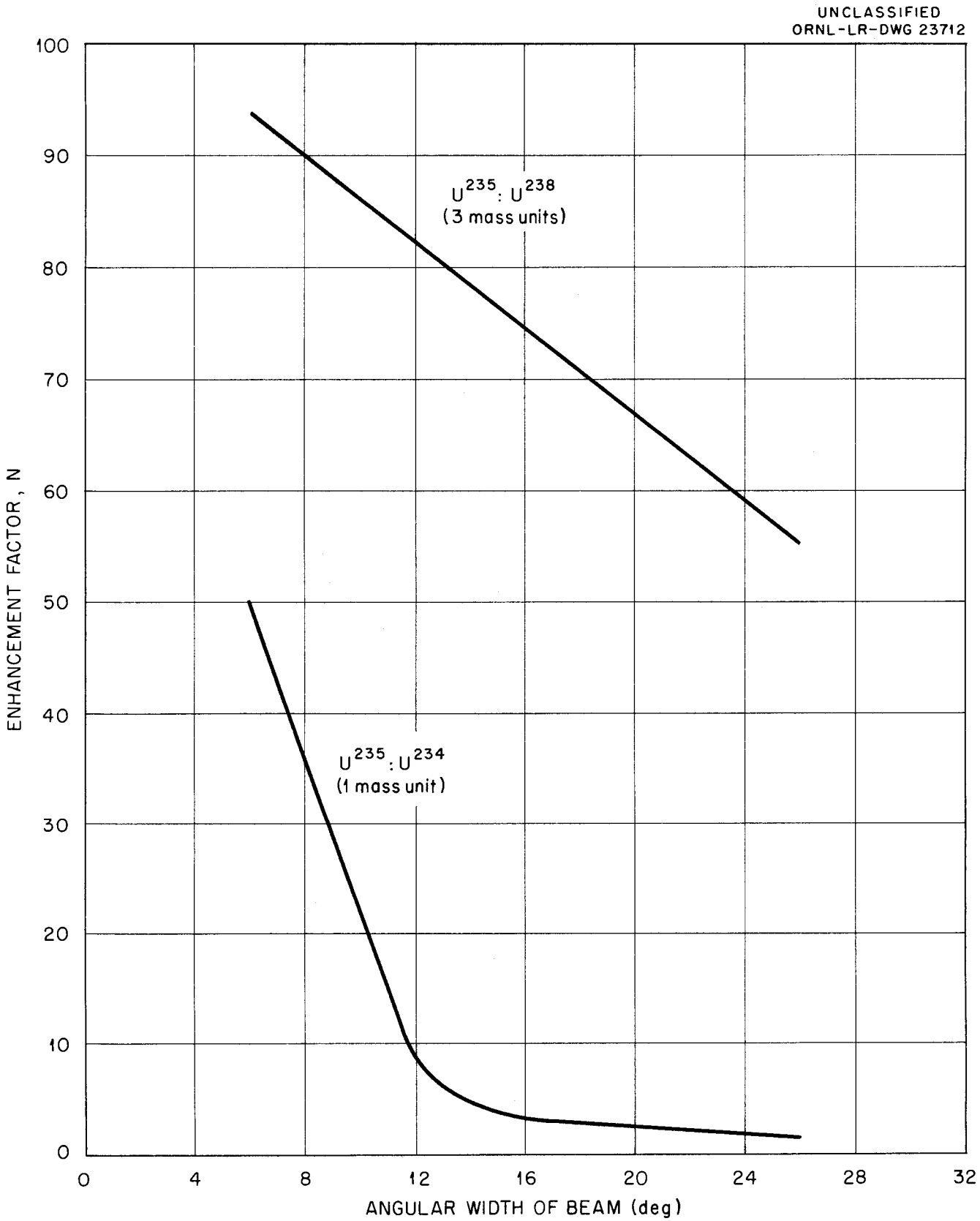

Fig. 6. Enhancements Obtained vs Angular Width of Beam.

V. Evaluation of Equipment

Ion Source Design and Performance

The Beta ion source used in the high enrichment of U^{235}, a modification of the M-12 type, Fig. 7, incorporated a number of changes to optimize enhancement. The most significant changes were in the spacing of and the apertures in the electrodes. The spacing used between 15-degree-type accelerating and decelerating electrodes was 1/2-in., and the apertures in the electrodes were 3/8-in. and 1 1/8-in., respectively. For an average separation run where the angular width of the beam was ±12 deg and the collector slot width was 1.33 mass units, the performance is summarized in Table VI.

Table VI. Performance of Modified M-12 Ion Source

Period of operation	67 hr
Downtime	7 hr
Working feed	650 g U
Total product collected	140 g U
Make-up feed	144 g U
U^+ ion current (2 beams)	230 ma
Vapor flow rate (2 arcs)	8.8 g U/hr
Process efficiency	23%
Enhancement U^{235}: U^{238}	59
U^{235}: U^{234}	1.7

The data given in Table VI make it possible to compare the performance of the modified ion source with the standard M-12 ion source with 0-deg electrodes, as last used in the Electromagnetic Plant*. The data can also be used for evaluating the ion source for further three-mass-unit separations. Tests had shown that the aperture, 7/16 x 6 3/4 in., could be reduced to increase (50%) process efficiency but at a loss (30%) in total ion current to the collector, with the enhancement little affected. The standard arc aperture was retained for the work described in this report. Higher enrichments were achieved by restricting the baffle aperture and the collector slots, see Table III.

* Hemphill, L. F., ed., The Electromagnetic Plant-1949, Vol. II, Part 1, p 140, Y-12 Plant, Report Y-E4-186 (Classified).

UNCLASSIFIED
PHOTO 10661

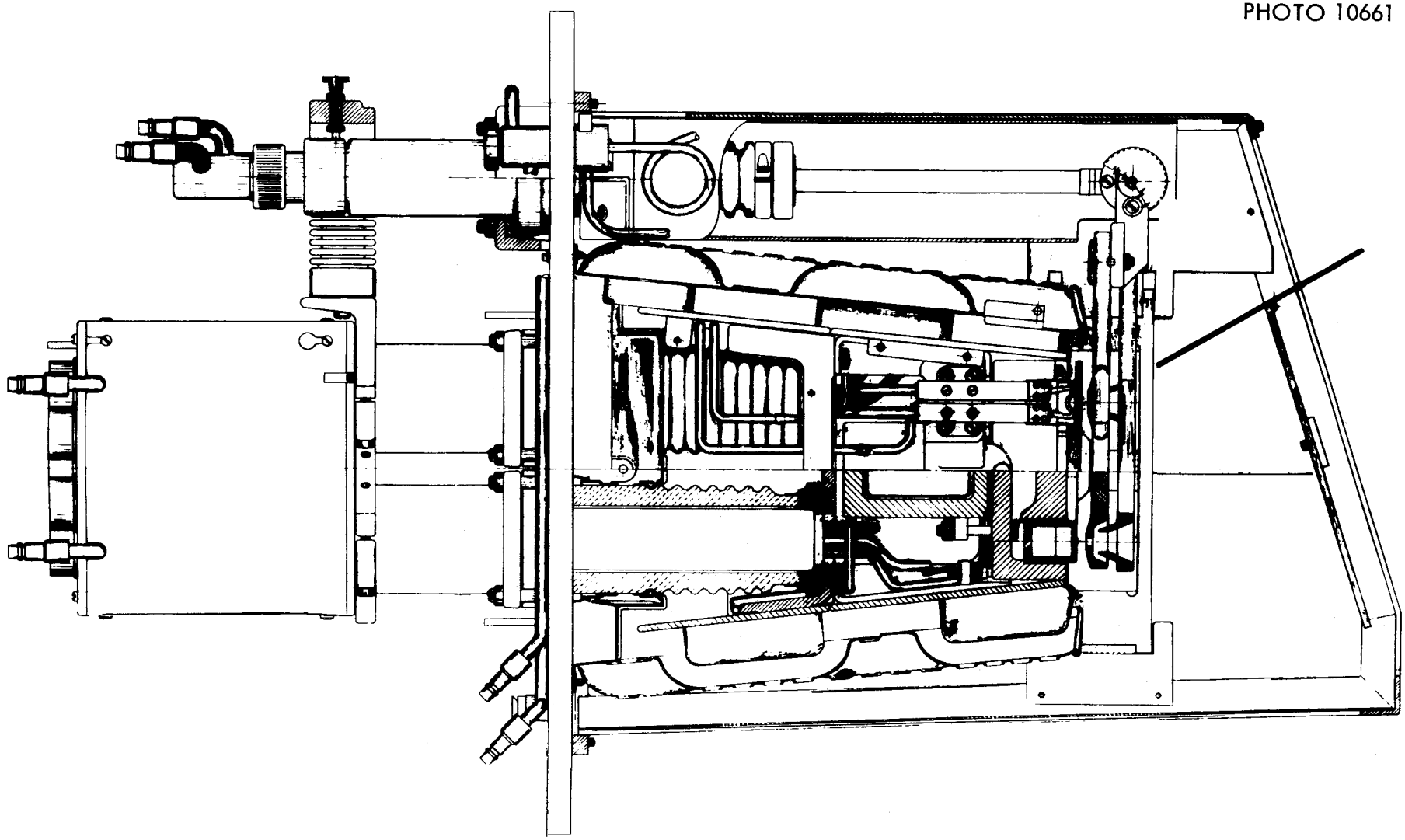

Fig. 7. Beta Ion Source, Model M-12

Collector Design and Performance

The functions of the collector are to collimate and monitor isotopic beams, retain deposited isotopes, and minimize cross-contamination of isotopes during product recovery. The principal consideration in design of collector pockets is the space limitation in both size and angle to the incident ion beam. A multi-pocket collector design is usually necessary to avoid substantial buildup of undesired isotopes in the recycled material. Products are lost and the collector efficiency is reduced when ions strike graphite surfaces at the collector face or enter the slots and are reflected or sputtered back into the separation region.

Cross-sections of graphite collectors designed for Project A and for B and C are shown in Fig. 8a and 8b. Performance of the latter model is given in Table VII.

Table VII. Performance of Multi-Pocket Collector

Principal Isotope	Enhancement Relative to U-238	U-236	U-235	U-234	Retention Efficiency (%)
U-238	--	68	210	250	72
U-236	56	--	40	72	70
U-235	90	16	---	30	98
U-234	56	44	30	---	61

The choice of entrance slot (0.050 x 7.87 in.) shown in Fig. 8b is a compromise between utilization of the ion beam, enhancement, and collector-life objectives. The angle at which the incoming beam strikes the graphite separating strip is likewise a compromise between retentivity and monitoring demands, which are not capatible. Differences in comparable enhancement factors, e.g., U^{235}: U^{234} = 30 and U^{236}: U^{235} = 40 is attributed to intensive erosion of the defining edges of the

UNCLASSIFIED
ORNL-LR-DWG 23713

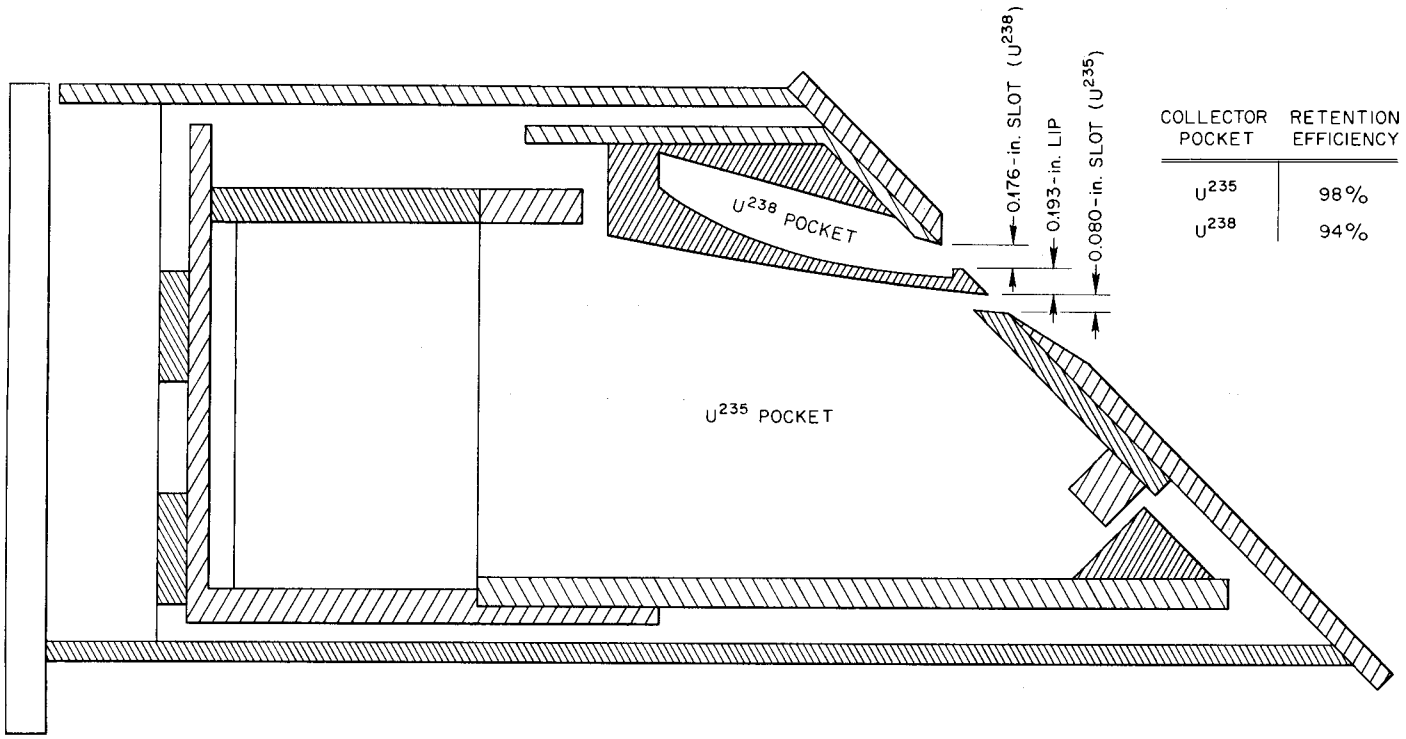

COLLECTOR POCKET	RETENTION EFFICIENCY
U^{235}	98%
U^{238}	94%

Fig. 8a. Two-Pocket Collector, used in Project A.

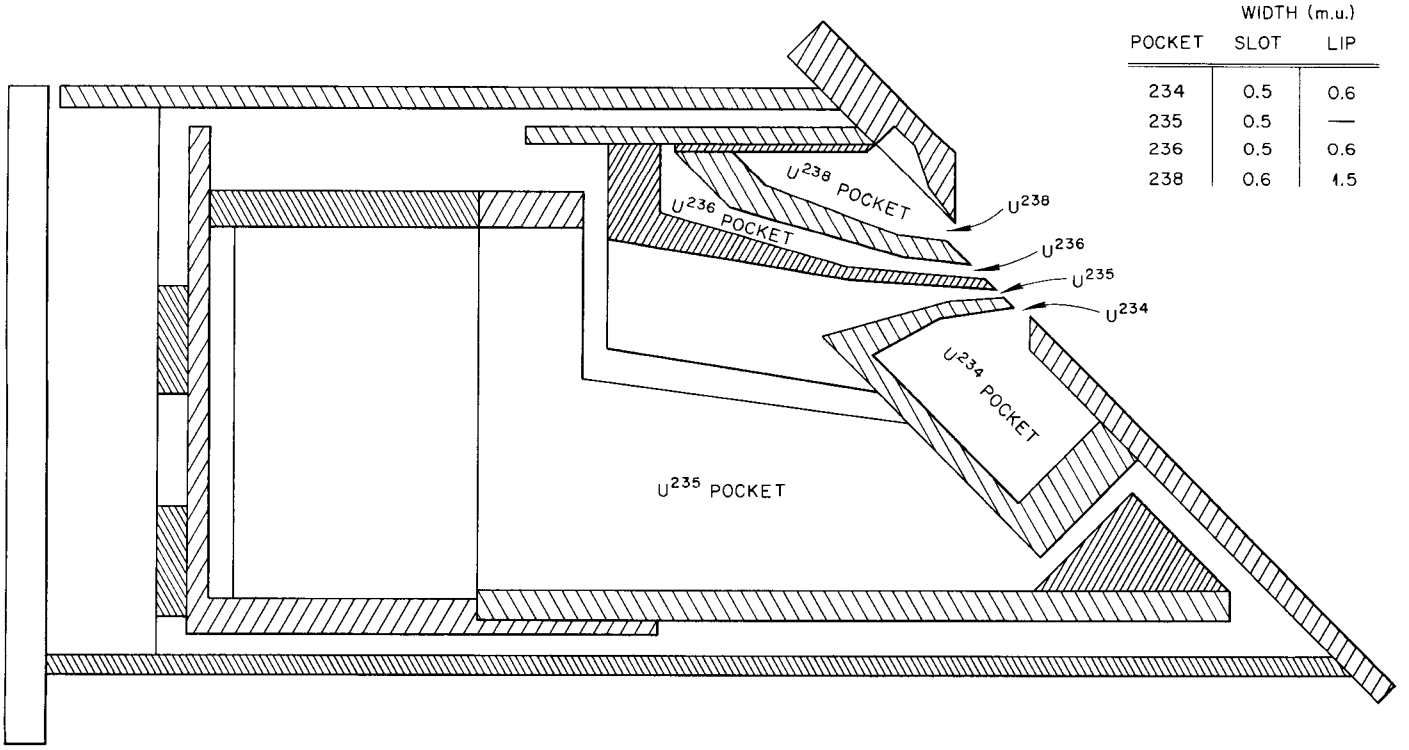

POCKET	WIDTH (m.u.) SLOT	LIP
234	0.5	0.6
235	0.5	—
236	0.5	0.6
238	0.6	1.5

Fig. 8b. Four-Pocket Collector, used in Projects B and C.

U^{235} slot when enriched feed is used. Since the presence of U^{234} and U^{236} is the main consideration in isolating high-purity U^{235}, erosion of the slot defining edges tends to limit the useful life of the multi-pocket collector to about 1 ampere-hour of U^{235} ion current.

There is a second-order effect on enhancement in the case of smaller collector slot geometries. Scattering of sidebands and neutrals into the narrower U^{235} slot is somewhat reduced. For the purpose of extracting samples of maximum isotopic purity in Project A, the collector pocket was carefully disassembled and the product was selectively recovered from the various surfaces for subsequent purification and mass analysis. Results of selective recovery procedures are tabulated in Appendix B.

Acknowledgements

There were many participants in this program; their contributions are gratefully acknowledged. Mass assays and analytical measurements were made under the direction of R. F. Hibbs. The enriched products were extracted and purified by T. P. Sprague, J. M. Googin, C. C. Sharp, and H. R. Gwinn.

Appendix A: Definitions of Process Parameters

Enhancement is determined from the isotopic assay of the product resulting from separation of a given feed mixture. The enhancement factor for one mass-unit separation lies between 5 and 60. An explanation of what this implies to various isotopic concentrations of feed material is charted in Fig. 9.

Process efficiency is proportional to the ratio of ion current to feed vaporization rate. Low process efficiency presents the problem of recovery, purification, and reprocessing of the feed material.

Recovery efficiency is the measure of material loss and discard per cycle.

Retention efficiency is the ratio of expected (metered) to recovered deposits in a collector pocket.

Utilization efficiency is the index of conservation of feed material. It increases with process efficiency and recovery efficiency and decreases with cross-contamination of the collector pockets or products.

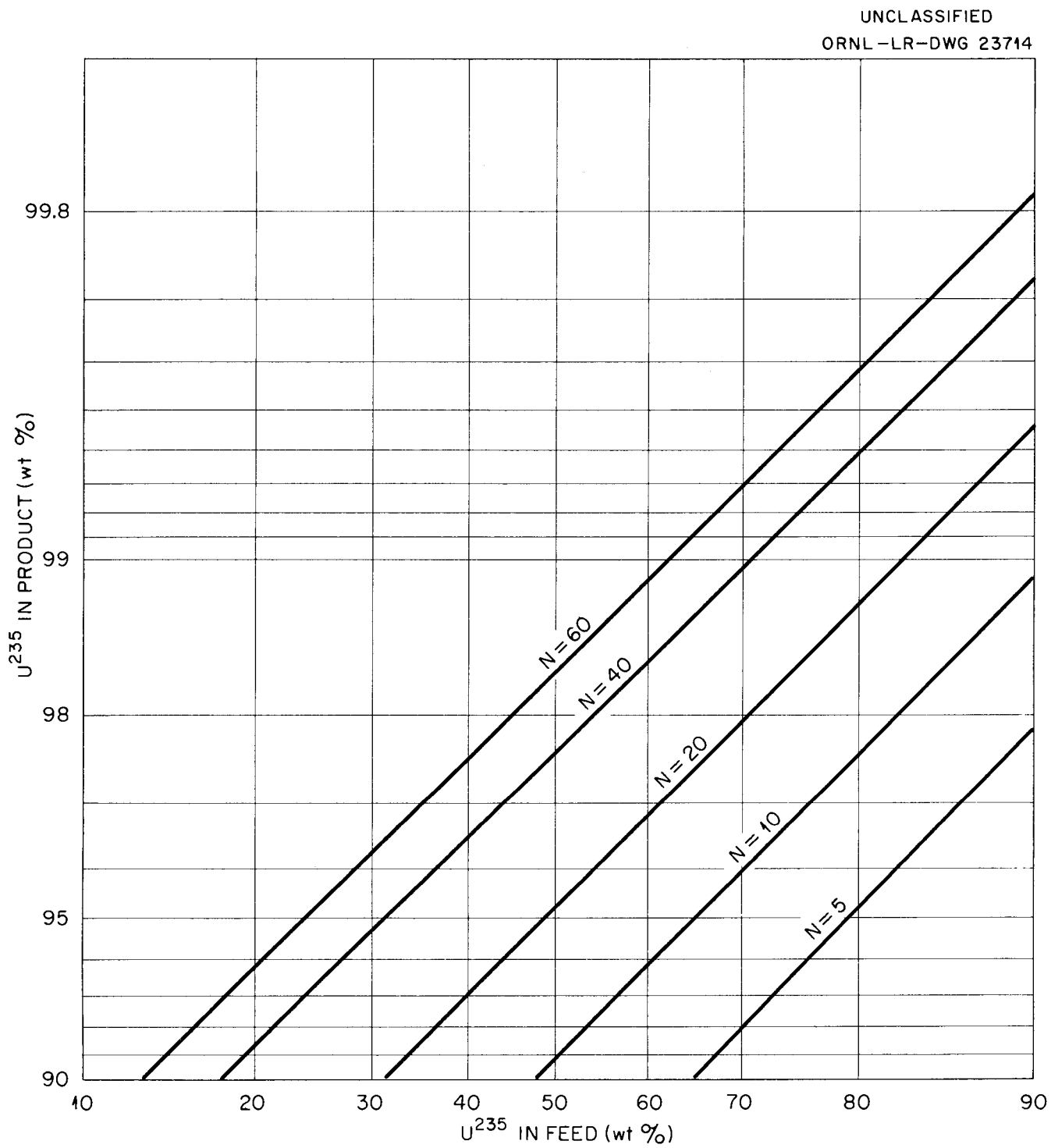

Fig. 9. Product U^{235} Concentration vs Feed Concentration for Various Enhancements (N)

Appendix B: Distribution of Enriched U-235 in Collectors

Project A

Run No.	Box No.	Batch	Mass Assay (Wt %) U-235	U-238	U-234	Weight U (g)
1	1	*Center footscrapers	99.94	0.038	0.022	11.17
	2	Center footscrapers	99.93	0.044	0.026	9.79
	1	End footscrapers	99.90	0.064	0.036	1.63
	2	End footscrapers	99.93	0.046	0.024	1.65
	1	Liner scrapings	99.92	0.049	0.031	1.93
	2	Liner scrapings	99.88	0.082	0.038	2.57
	1	**Milled graphite scrapings	99.85	0.070	0.080	0.94
2	1	Center footscrapers	99.92	0.050	0.030	10.27
	2	Center footscrapers	99.90	0.070	0.030	9.76
	1, 2	End footscrapers	99.90	0.070	0.030	5.98
	1, 2	Liner scrapings	99.80	0.150	0.050	4.51
	1, 2	Milled graphite scrapings	99.77	0.150	0.080	1.38
3	1	Center footscrapers	99.87	0.100	0.030	14.97
	1	End footscrapers	99.79	0.140	0.070	1.72
	1	Liner scrapings	99.74	0.180	0.080	2.99
	1	Milled graphite scrapings	99.87	0.080	0.050	0.67
	1	Back liner flakes	99.89	0.070	0.040	0.58
	1	Slot scrapings	99.66	0.170	0.170	0.28

* Footscrapers are graphite vanes which are inserted in the collectors at an angle to minimize losses by sputtering.

** The beams of the two isotopes are incident on two sides the milled graphite separating strip. Vacuum-scraping techniques permit selective recovery of uranium deposits from either side.