4-CRL

MARTIN MARIETTA ENERGY SYSTEMS LIBRARIES
3 4456 0350573 0

CENTRAL RESEARCH LIBRARY
DOCUMENT COLLECTION

ORNL-2483
Instruments
TID-4500 (13th ed., Rev.)

HIGH TEMPERATURE PRESSURE TRANSMITTER EVALUATION

W. R. Miller

OAK RIDGE NATIONAL LABORATORY
operated by
UNION CARBIDE CORPORATION
for the
U.S. ATOMIC ENERGY COMMISSION

CENTRAL RESEARCH LIBRARY
DOCUMENT COLLECTION
LIBRARY LOAN COPY
DO NOT TRANSFER TO ANOTHER PERSON
If you wish someone else to see this document, send in name with document and the library will arrange a loan.

Printed in USA. Price 1.25 cents. Available from the

Office of Technical Services
U. S. Department of Commerce
Washington 25, D. C.

LEGAL NOTICE

This report was prepared as an account of Government sponsored work. Neither the United States, nor the Commission, nor any person acting on behalf of the Commission:

A. Makes any warranty or representation, express or implied, with respect to the accuracy, completeness, or usefulness of the information contained in this report, or that the use of any information, apparatus, method, or process disclosed in this report may not infringe privately owned rights; or

B. Assumes any liabilities with respect to the use of, or for damages resulting from the use of any information, apparatus, method, or process disclosed in this report.

As used in the above, "person acting on behalf of the Commission" includes any employee or contractor of the Commission to the extent that such employee or contractor prepares, handles or distributes, or provides access to, any information pursuant to his employment or contract with the Commission.

ORNL-2483
Instruments
TID-4500 (13th ed., Rev.)

Contract No. W-7405-eng-26

INSTRUMENTATION AND CONTROLS DIVISION

HIGH TEMPERATURE PRESSURE TRANSMITTER EVALUATION

W. R. Miller

DATE ISSUED
MAY 16 1958

OAK RIDGE NATIONAL LABORATORY
Oak Ridge, Tennessee
operated by
UNION CARBIDE CORPORATION
for the
U. S. ATOMIC ENERGY COMMISSION

MARTIN MARIETTA ENERGY SYSTEMS LIBRARIES
3 4456 0350573 0

CONTENTS

Introduction 1

Statement of the Problem 1

Status of the Art 1

Design Criteria 1

Method and Procedure 1

Procurement 1

Test Facility 1

Test Procedure 3

Transmitter Designs and Test Results 4

Item No. 1. Taylor Instrument Companies Model IED 20949 4

Item No. 2. Moore Products Company Model 15 (Special) 7

Item No. 3. Moore Products Company Model 15 (Special, Breeze Bellows) 9

Item No. 4. Foxboro Company Model ES 732 12

Item No. 5. Associated Valve & Engineering Company Model 1250X 15

Item No. 6. Taylor Instrument Companies Model IED 21678AA 18

Item No. 7. Taylor Instrument Companies Model X-226 RN 1103 19

Item No. 8. Callery Chemical Company Model C (Special) 22

Item No. 9. Manning, Maxwell & Moore Model 185 (Special) 24

Item No. 10. Crescent Engineering & Research Company Model PGH-2-100 29

Item No. 11. Taylor Instrument Companies Model 706 TN 1103 29

Conclusion 30

Discussion of Salient Features 31

Transmitter Design Considerations 35

Installation Details 35

Appendix 36

HIGH TEMPERATURE PRESSURE TRANSMITTER EVALUATION

W. R. Miller

INTRODUCTION

Statement of the Problem

The use of liquid metals in nuclear reactor systems has generated a wide need for high-temperature instrumentation. The purpose of the high-temperature pressure transmitter evaluation program was to interest commercial vendors in making available several high-temperature pressure transmitter designs of proven reliability for both pressure and flow applications.

The major problem in this effort was to design a primary sensing element which would withstand the corrosive attack of liquid metals at elevated temperatures and demonstrate the success of the design by operating for 3000 hr without maintenance of any kind.

Status of the Art

Commercial pressure transmitters in existence could not be operated above 400°F and were not constructed of materials with sufficient corrosion resistance to meet requirements. Currently available electrical pressure transducers required cooling gases or fluids for operation above 400°F, which added to the complexity of installation, maintenance, and dependability.

Design Criteria

The following specifications were established and were deemed minimum to satisfy the process requirements:

A. Sensing Element. –

1. Operating range: 0–100 psig (future units would be required in the following ranges: 0–50, 0–150, 0–200 psig).
2. Operating temperature: Ambient to 1500°F.
3. Accuracy (sensor only): ±1% full scale maximum.
4. Linearity (sensor only): ±1% full scale maximum.
5. Hysteresis (sensor only): ±1% full scale maximum.
6. Over-range: Must withstand high negative pressure and 150% overpressure while hot without span or zero shift.
7. Leakage: All units must be mass spectrometer leak tight. No leakage permitted.
8. Construction: All parts in contact with process fluid must be Inconel (no Inconel "X") of completely welded construction. All parts not in contact with process fluid may be 316 SS. All welding must be per ORNL Spec. PS-1. Minimum primary diaphragm or bellows thickness 0.025 inches.

B. Transmitting System. –

1. For many applications, electrical transmission will be required. However, the use of pneumatic detectors will be tolerated provided the output signal can be transduced electrically within the required accuracy limits.
2. It is preferred that the electrical output signal be DC to avoid problems associated with pickup, phasing, and transmission line capacity.
3. In most applications the transmitting element will not be accessible and therefore, must transmit a signal for at least 100 feet before encountering amplifiers, bridge adjustments, or power supplies which require maintenance.
4. Overall system accuracy (including sensor): 1.5% full scale, Max.
5. Overall system linearity (including sensor): 1.5% full scale, Max.
6. Overall system hysteresis (including sensor): 1.5% full scale, Max.
7. Transmitter ambient temperature: 80 to 200°F.
8. Response time: Less than 1 second full scale (overall system).
9. The use of organic materials should be avoided since these units may be used in the presence of radiation.

METHOD AND PROCEDURE

Procurement

The design criteria detailed above were submitted to over forty instrument manufacturers with an invitation to submit designs and bids for six prototype models. Each vendor was made aware that, if his design was accepted, the prototype models he manufactured would be competitively tested with those of other manufacturers under identical conditions.

The initial inquiries brought forth twelve practical designs. Of these, seven were deemed applicable to design requirements, and an order for six prototype models was placed with each manufacturer.

Test Facility

A test facility was built to simultaneously test eight pressure transmitters under simulated process conditions (Fig. 1).

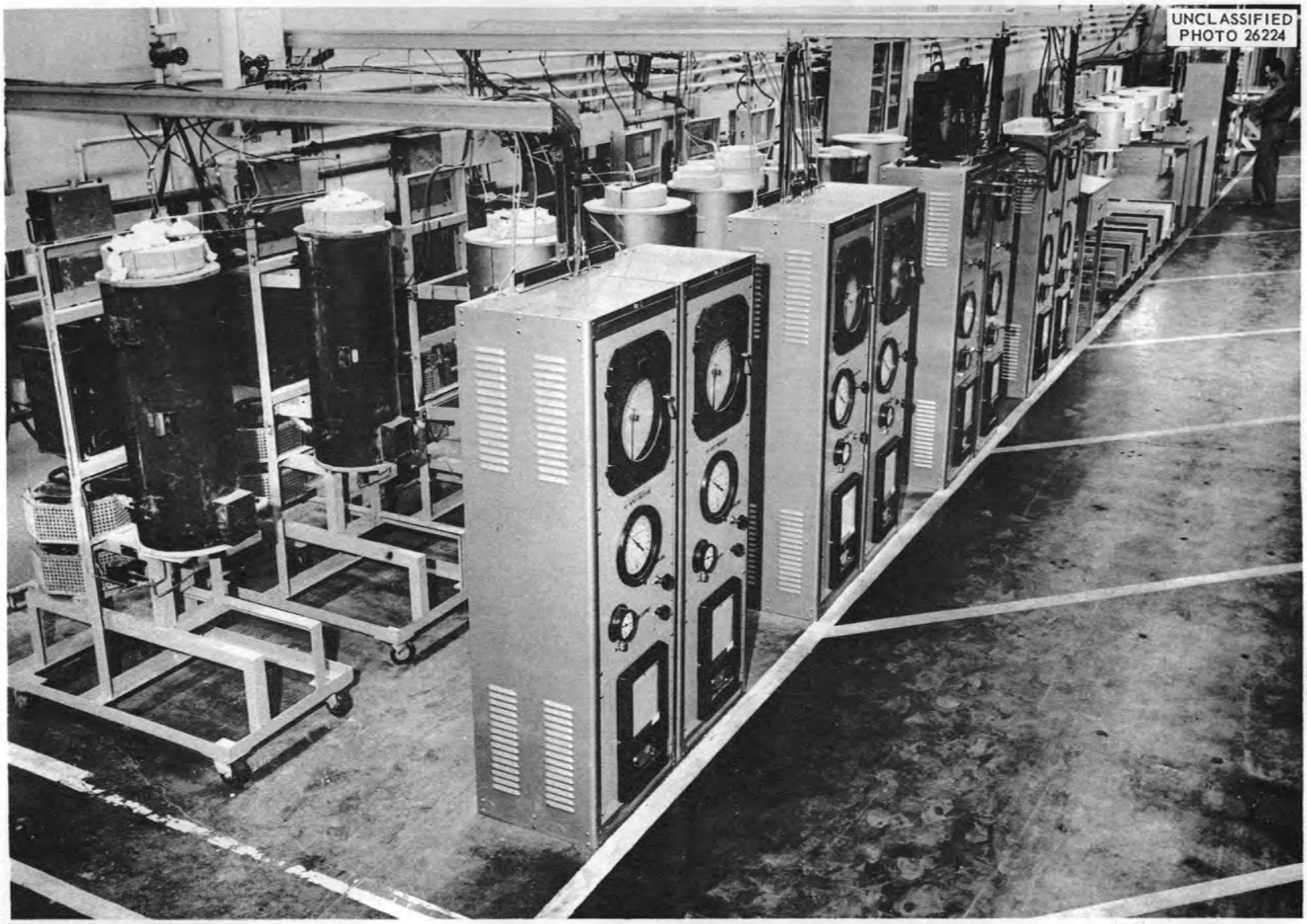

Fig. 1. Test Facility for Evaluation of High-Temperature Pressure Transmitters.

Electric furnaces were provided to attain sensing-element temperature environments. Furnace temperatures were maintained by individual Leeds & Northrup Speedomax model "H" D.A.T.-type controllers.

Process pressures were simulated by using helium gas. This medium was chosen to prevent oxidation of the sensing elements at elevated temperatures so metallurgical examination could be carried out after all testing was completed. The gas pressure was controlled by precision pilot-operated reducing valves, and the pressures were indicated on precision (¼% accuracy) laboratory gages.

The output signal from pneumatic units was indicated on precision (¼% accuracy) laboratory gages, and was recorded on commercial pressure recorders where long-term stability records were required.

A typical facility for pneumatic units is diagramed in Fig. 2.

Electrical output signals were indicated on equipment compatible with the type of transmission employed. Individual electrical readout equipment is described in connection with the various transmitter designs.

Test Procedure

After the sensing element had been mounted in the furnace and the transmitter properly connected for operation, the unit was calibrated at ambient temperature. A final zero setting was made at 30 psi before test data were taken.

Output readings were taken at 5-psi increments upscale and then downscale throughout the full range of the instrument. This procedure was carried out at ambient, 500°F, 1000°F, 1200°F, and 1400°F, *without rezeroing*. By coupling this calibration procedure to the plotting method employed, it was possible to produce a family of curves for each pressure transmitter which shows at a glance the per cent full-scale accuracy, linearity, hysteresis, and zero shift due to sensor temperature environment. For each curve, the maximum plus *and* minus deviation from a horizontal line is given as the "per cent spread." This figure is a measure of hysteresis, repeatability, and sensitivity, but does not include zero shift.

Short-term stability was checked by recording the output signal for a period of 48 hr under static conditions.

UNCLASSIFIED
ORNL-LR-DWG 29206

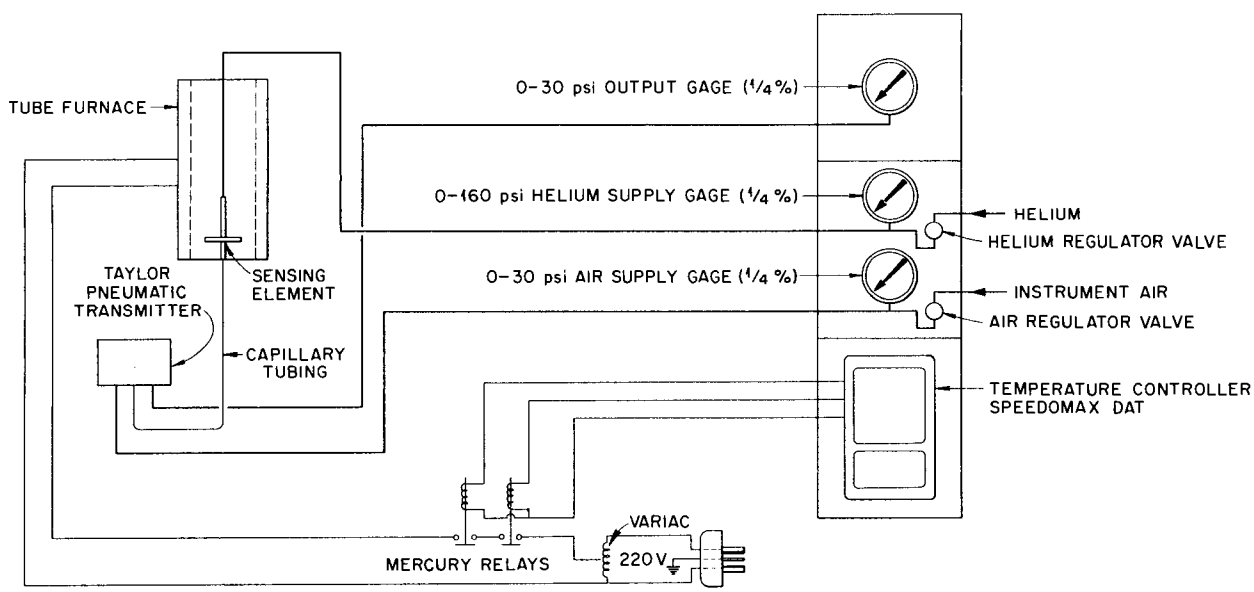

Fig. 2. Typical Pressure Transmitter Test Facility.

Speed-of-response tests were accomplished by applying a 50%-full-scale step change to the transmitter input, while recording the output signal on an instrument employing a fast chart and pen speed.

Long-term stability tests under actual process conditions were run on only the two most successful designs, for reasons of economy. The first tests were run in the test area described previously. The furnaces containing the sensing elements were held at 1200°F for 3000 hr. A constant input pressure equal to 50% of the transmitter range was applied, and the output signal was continuously recorded. Once a week, output readings were taken at 5-psi increments both upscale and downscale throughout the full range of the transmitter.

The second tests were run at 1200°F for 3000 hr in loops circulating liquid metal. These loops were primarily designed to test other components, so only periodic calibration checks were made on the pressure transmitters. The purpose of these tests was to determine the corrosion resistance of the sensing elements and to subject them to actual process environments such as pressure transients and temperature variations. After completing the 3000-hr run, the sensors were machined apart and submitted for metallurgical examination.

TRANSMITTER DESIGNS AND TEST RESULTS

This chapter is arranged chronologically to illustrate the procession of events which led to a final design best meeting the design criteria.

Item No. 1. Taylor Instrument Companies Model IED 20949

Cost. – $750.00 each.

Description. – See Figs. 3 and 4.

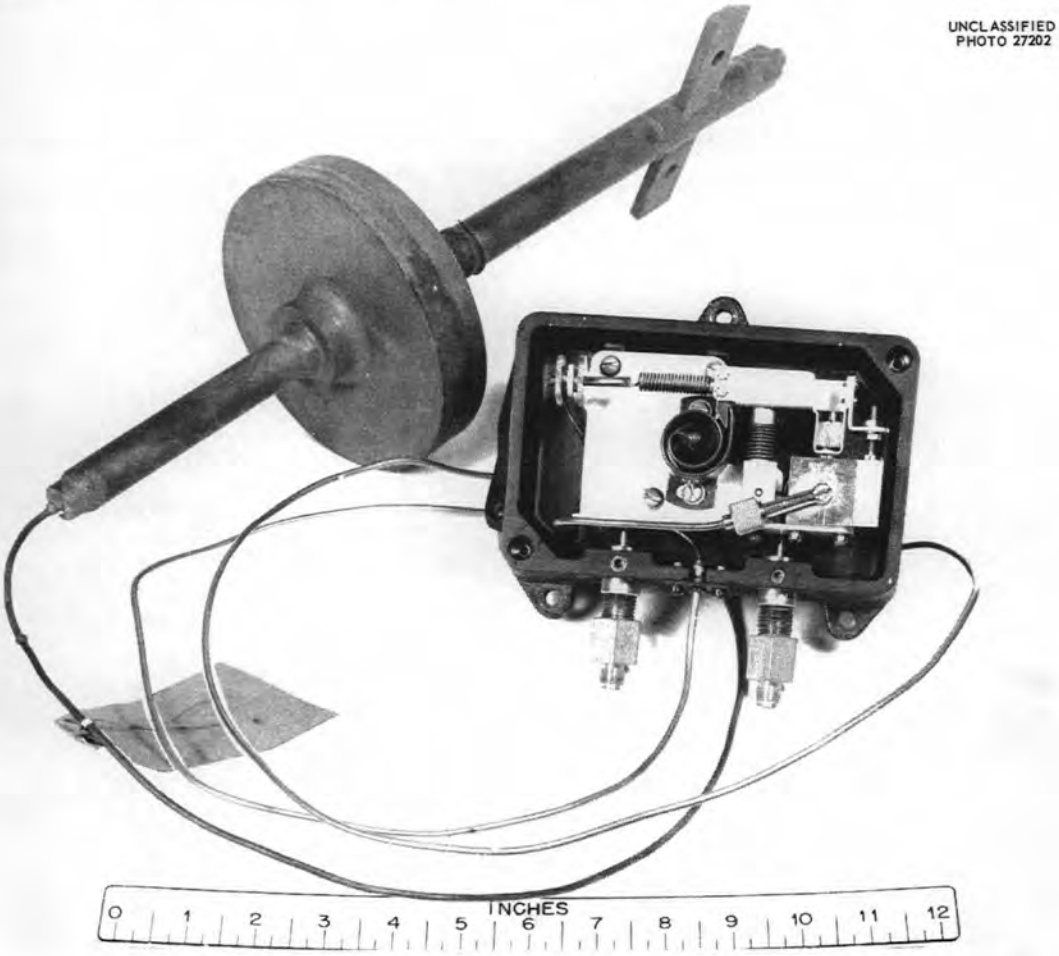

Fig. 3. Taylor Instrument Companies Transmitter Model IED 20949.

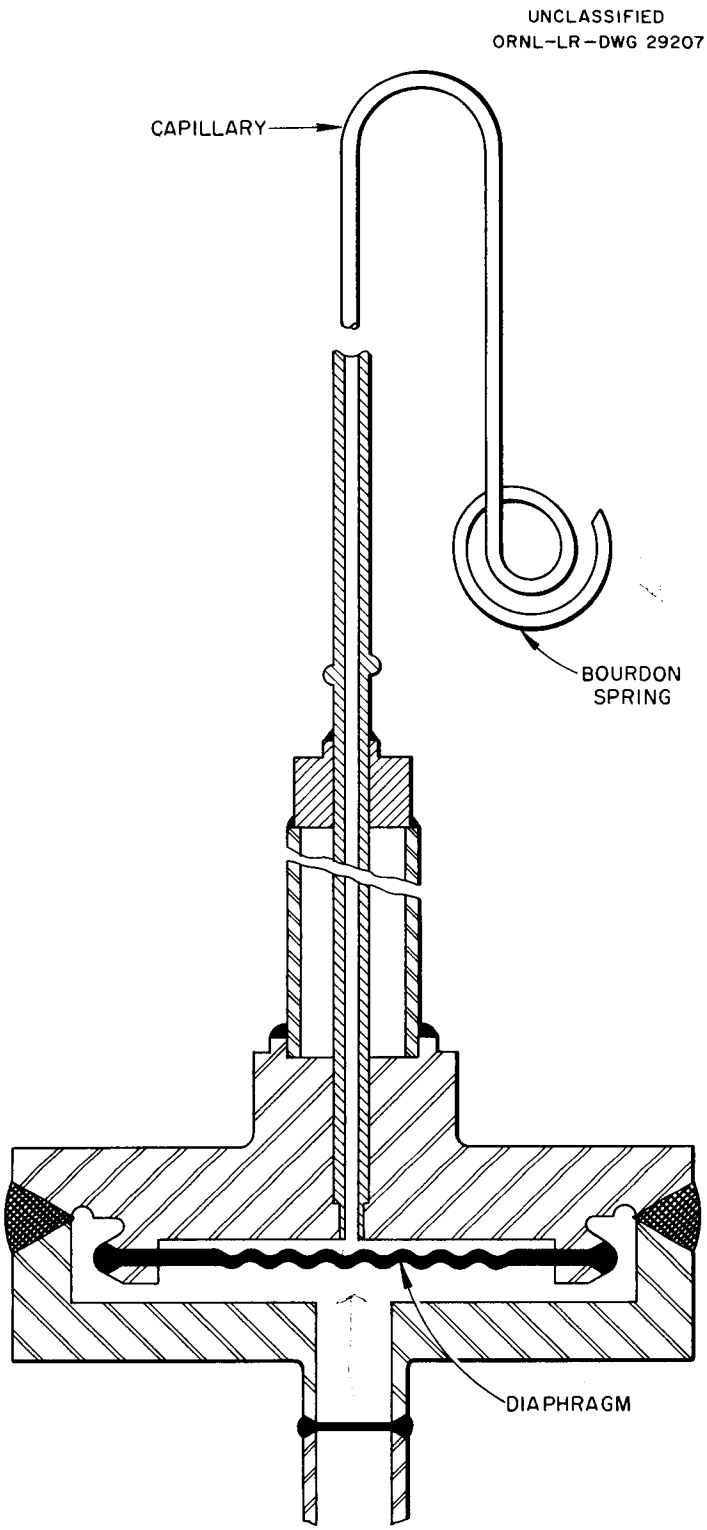

Fig. 4. Taylor Instrument Companies Transmitter Model IED 20949.

Sensor. – The sensor consists of a NaK-filled tube system employing five-ply (0.005 in. each) Inconel diaphragm construction in all-welded Inconel housing. The tube system termination is a Bourdon spring.

Transmitter. – The transmitter is a pneumatic force-balance type providing 3–15 psig output signal.

Operation. – Pressure exerted on the diaphragm by the process fluid is hydrostatically transmitted via the capillary out of the hot zone to a Bourdon spring termination within the transmitter case. Motion from the Bourdon spring is applied to a force beam to position a relay valve pilot. The resulting output pressure changes from the relay valve are fed to a bellows acting on the force beam in opposition to the Bourdon spring motion. Thus, the output pressure required to null the Bourdon spring force becomes a measure of the input pressure applied to the sensor.

Test Results. – A typical family of calibration curves for prototype unit No. 5 is given in Fig. 5. Speed-of-response test results are presented in Fig. 6. A tabulation of calibration data for all units tested appears in Table 1 (p 33).

The pneumatic transmitter mechanisms used in these units were model-shop built at the factory from a design which had not been field tested. This was acceptable in that prototype sensor designs were expected to fall far short of the transmitter's capabilities. Difficulties of a minor nature were experienced with dashpot plunger

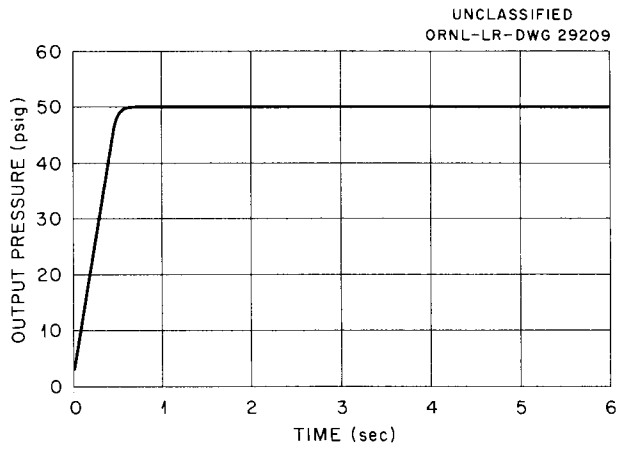

Fig. 6. Speed of Response of Taylor Instrument Companies Transmitter Model IED 20949.

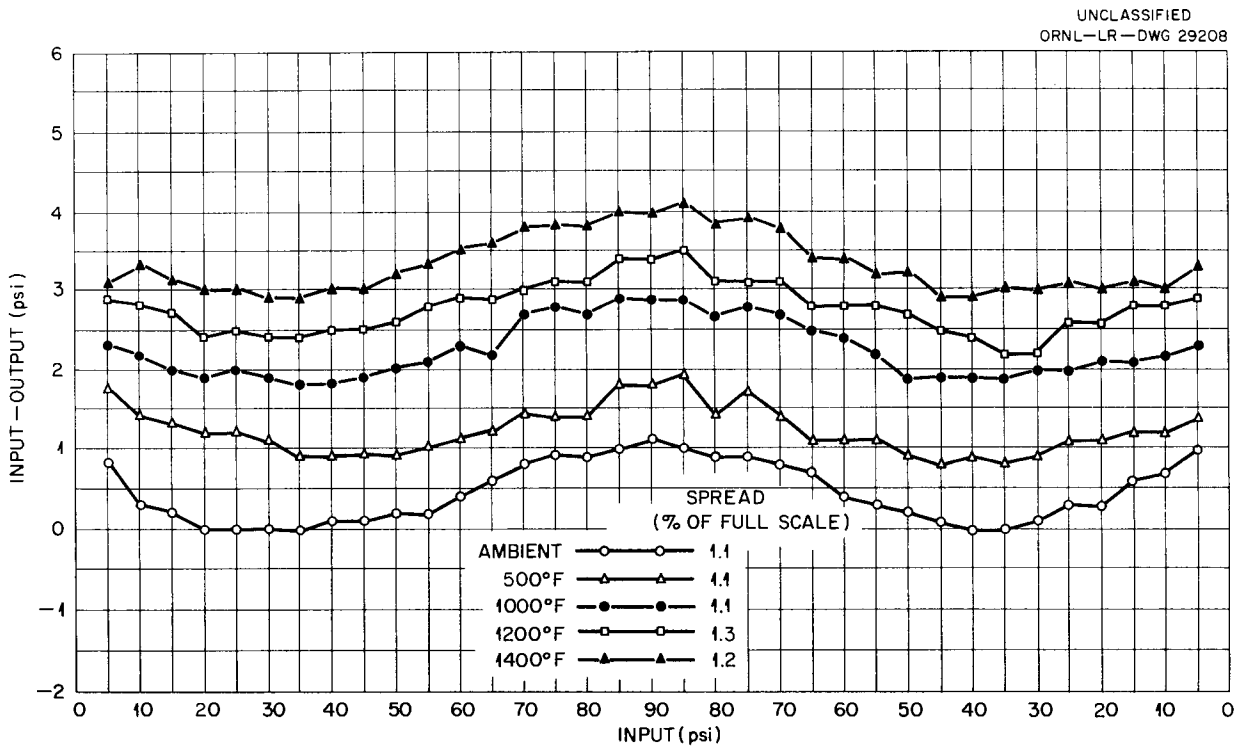

Fig. 5. Typical Calibration Curves for Taylor Instrument Companies Transmitter Model IED 20949, Prototype Unit No. 5. Range 0–100 psi.

alignment, and span adjustments were found to be quite critical.

Except for zero shift due to sensor temperature environments (approximately 4%) these units fulfilled all design requirements. Further refinements of this basic design are discussed in items No. 6, 7, and 11.

Item No. 2. Moore Products Company Model 15 (Special)

Cost. – $315.00 each.

Description. – See Figs. 7 and 8.

Sensor. – The sensor consists of a formed three-ply (0.008 in. each) Inconel bellows in $2\frac{1}{2}$-in. sched 40 Inconel pipe housing.

Transmitter. – Only the nozzle and baffle portion of the pneumatic transmitter is contained in the transmitter housing. The relay valve and automatic orifice mechanism is contained in a separate housing and is designated as a 60NE relay. Two $\frac{1}{4}$-in. air tubes are required between the transmitter and relay for operation. The ratio of input to output pressure signal is approximately 1:1.

Operation. – Motion derived from the process fluid acting on the outside of the bellows is transmitted via a push rod to the cool (750°F max.) end of the transmitter. The end of the rod is actually the baffle of a nozzle-baffle system. Movement of the push rod restricts the flow of air from the nozzle, which causes the nozzle back pressure to increase. This correspondingly causes an increase in output pressure from the 60NE pilot relay. The output pressure is applied to the inside of the bellows via the second air tube to complete the force-balance feedback loop. Thus, the output signal is a 1:1 function of the input signal.

Test Results. – A typical family of calibration curves for prototype unit No. 5 is given in Fig. 9. Speed-of-response test results are given in Fig. 10. A tabulation of calibration data for all units tested appears in Table 1. The only adjustment provided on this transmitter is zeroing, which is accomplished by screwing the nozzle in or out of the cool (750°F) end of the transmitter housing. Zeroing, therefore, is rather unpleasant due to the elevated temperature and rather difficult due to the drag imposed by the all-metal nozzle sealing gland.

Occasionally, a combination of relay valve and transmitter will be found which causes the output signal to oscillate. In most instances the difficulty can be overcome by selecting another relay valve.

The bellows in these units are capable of withstanding a differential pressure of only 15 psi at 1200°F. Therefore if the air supply fails when the process pressure is substantially above 15

UNCLASSIFIED
PHOTO 28783

Fig. 7. Moore Products Company Transmitter Model 15 (Special).

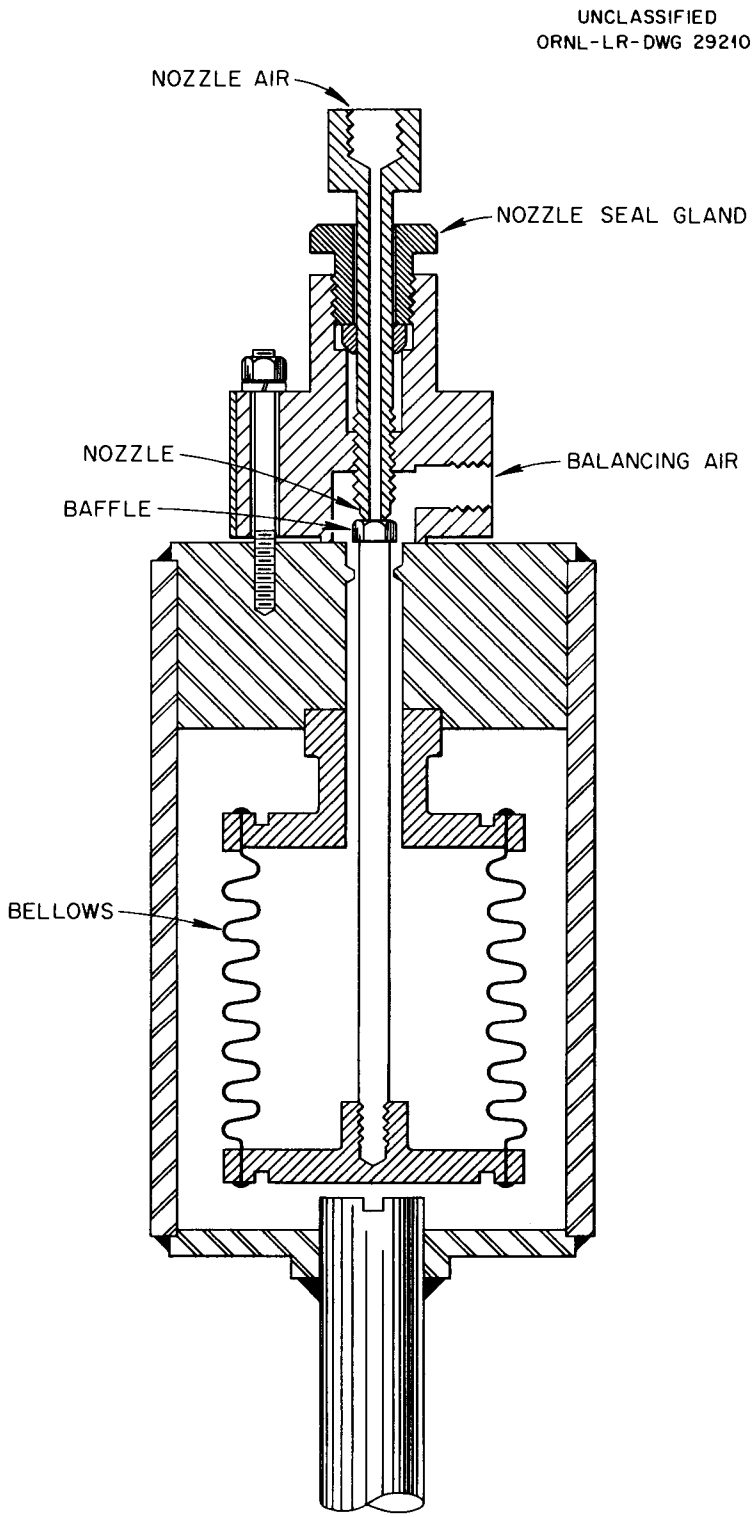

Fig. 8. Moore Products Company Transmitter Model 15 (Special).

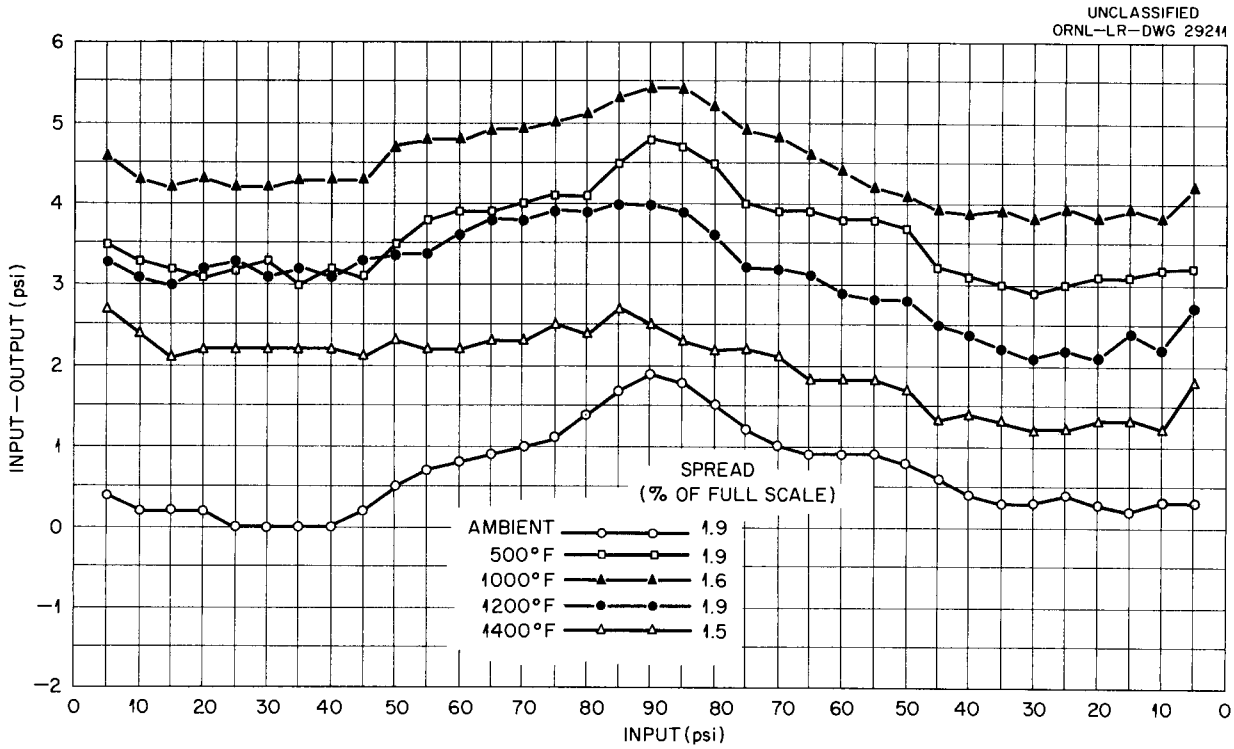

Fig. 9. Typical Calibration Curves for Moore Products Company Transmitter Model 15 (Special), Prototype Unit No. 5. Range 0–100 psi.

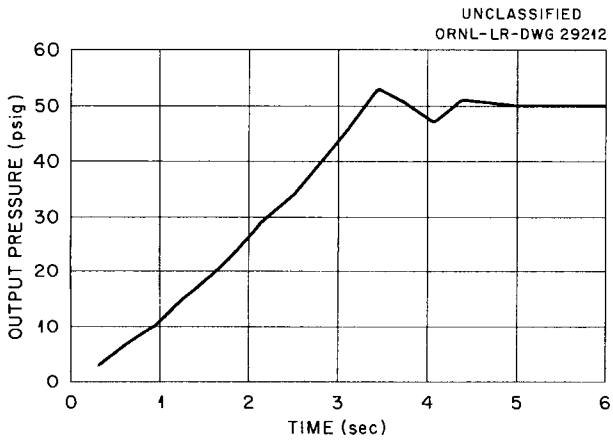

Fig. 10. Speed of Response of Moore Products Company Transmitter Model 15 (Special), Prototype Unit No. 2.

psi, enough permanent bellows distortion will result to render the transmitter inoperative.

Item No. 3. Moore Products Company Model 15 (Special, Breeze Bellows)

Cost. – $525.00.

Description. – This transmitter (Figs. 11 and 12) is identical with the instrument described in item No. 2 with the following exceptions:

1. Cooling fins in the form of grooves were added to the end of the housing to keep the nozzle section cooler.

2. The bellows (Breeze Corporations, Inc., Union, N.J.) is of the fabricated rather than formed type. Operation is identical with that of the unit described above (item No. 2).

UNCLASSIFIED
PHOTO 27197

Fig. 11. Moore Products Company Transmitter Model 15 (Special, Breeze Bellows).

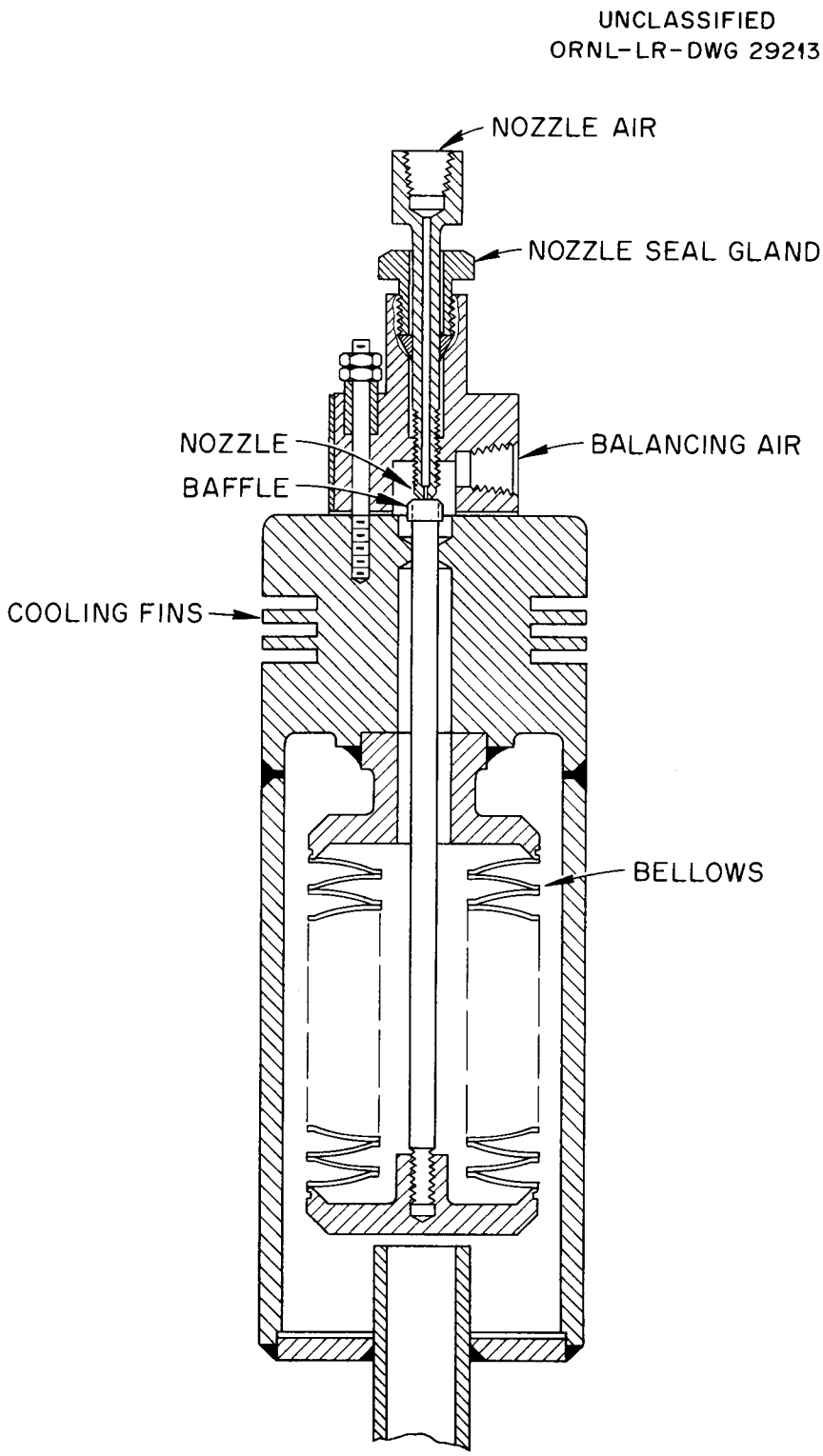

Fig. 12. Moore Products Company Transmitter Model 15 (Special, Breeze Bellows).

Test Results. – A typical family of calibration curves for prototype unit No. 2 is given in Fig. 13. Speed-of-response test results are given in Fig. 14. A tabulation of calibration data for all units tested appears in Table 1. Because these transmitters are identical with item No. 2, the comments regarding adjustment at elevated temperatures, etc., also apply in this case. However, the fabricated bellows employed in these transmitters is designed for a differential pressure of 70 psi at 1500°F and therefore will withstand greater overpressures and air supply failures at higher operating pressures.

A comparison of the test results given in Figs. 9 and 13 will indicate a decided improvement in characteristics through the use of the fabricated bellows; namely, zero shift due to temperature change is less, and over-all linearity is improved by a factor of approximately 2.

Item No. 4. Foxboro Company Model ES 732

Cost. – $1,533.00.

Description. – See Figs. 15 and 16.

Sensor. – The sensor is a twin-diaphragm capsule consisting of one Inconel diaphragm (0.025 in. thick) in contact with process fluid and one stainless steel backup diaphragm.

Transmitter. – The transmitter is a pneumatic force-balance type in the same housing as the sensing diaphragm capsule. The ratio of input to output pressure is 1:1.

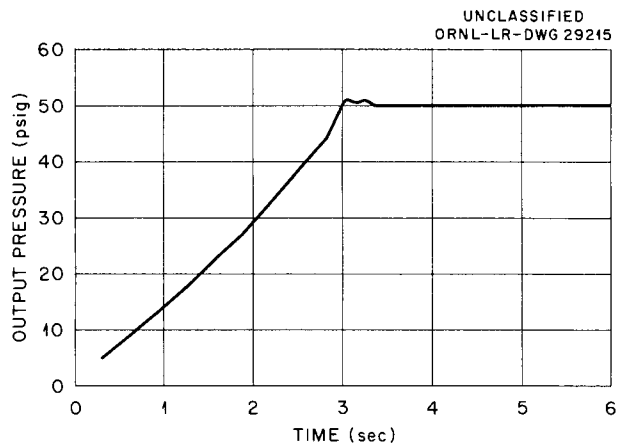

Fig. 14. Speed of Response of Moore Products Company Transmitter Model 15 (Special, Breeze Bellows), Prototype Unit No. 3.

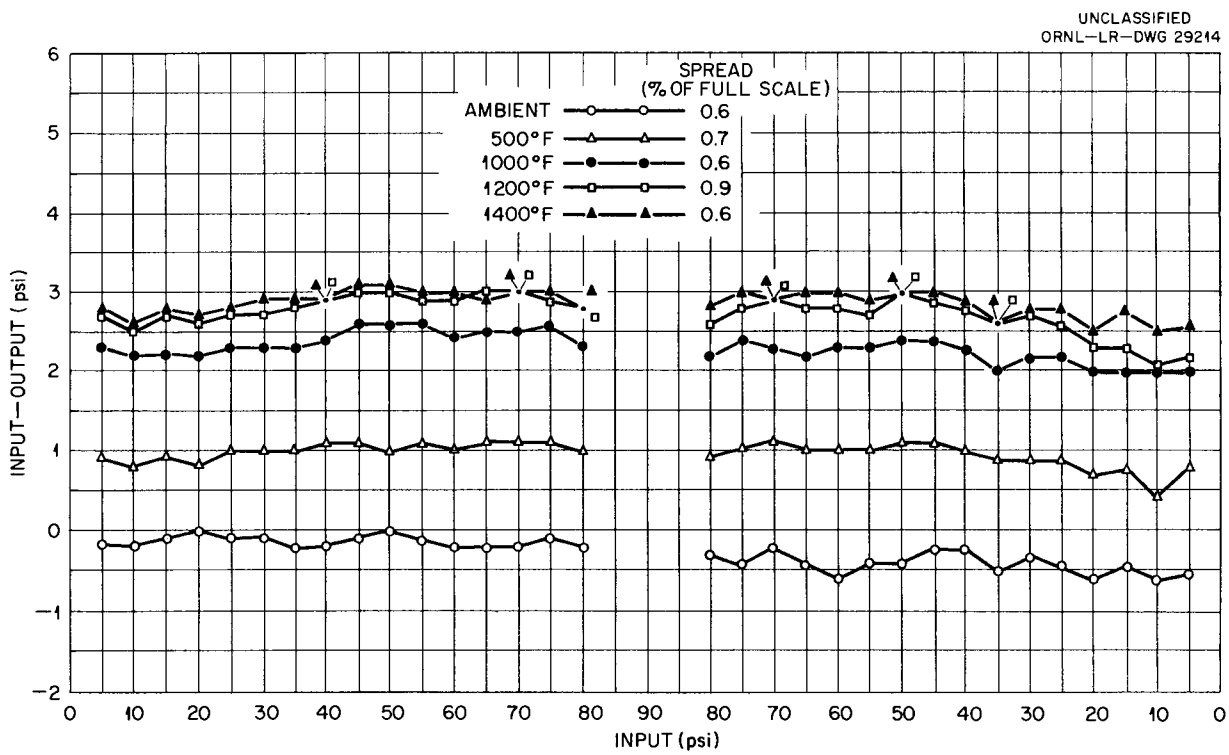

Fig. 13. Typical Calibration Curves for Moore Products Company Transmitter Model 15 (Special, Breeze Bellows), Prototype Unit No. 2. Range 0–100 psi.

UNCLASSIFIED
PHOTO 27196

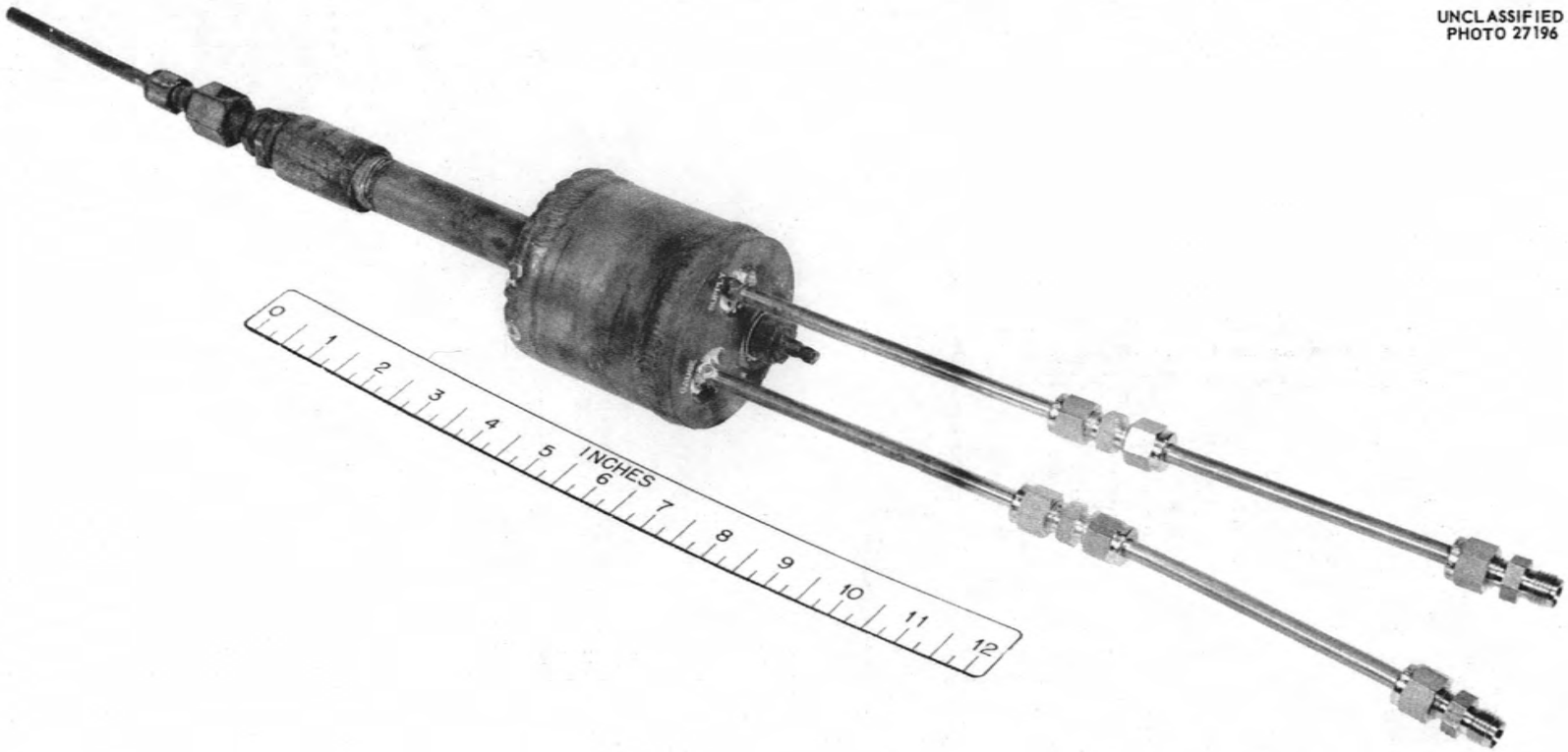

Fig. 15. Foxboro Company Transmitter Model ES 732.

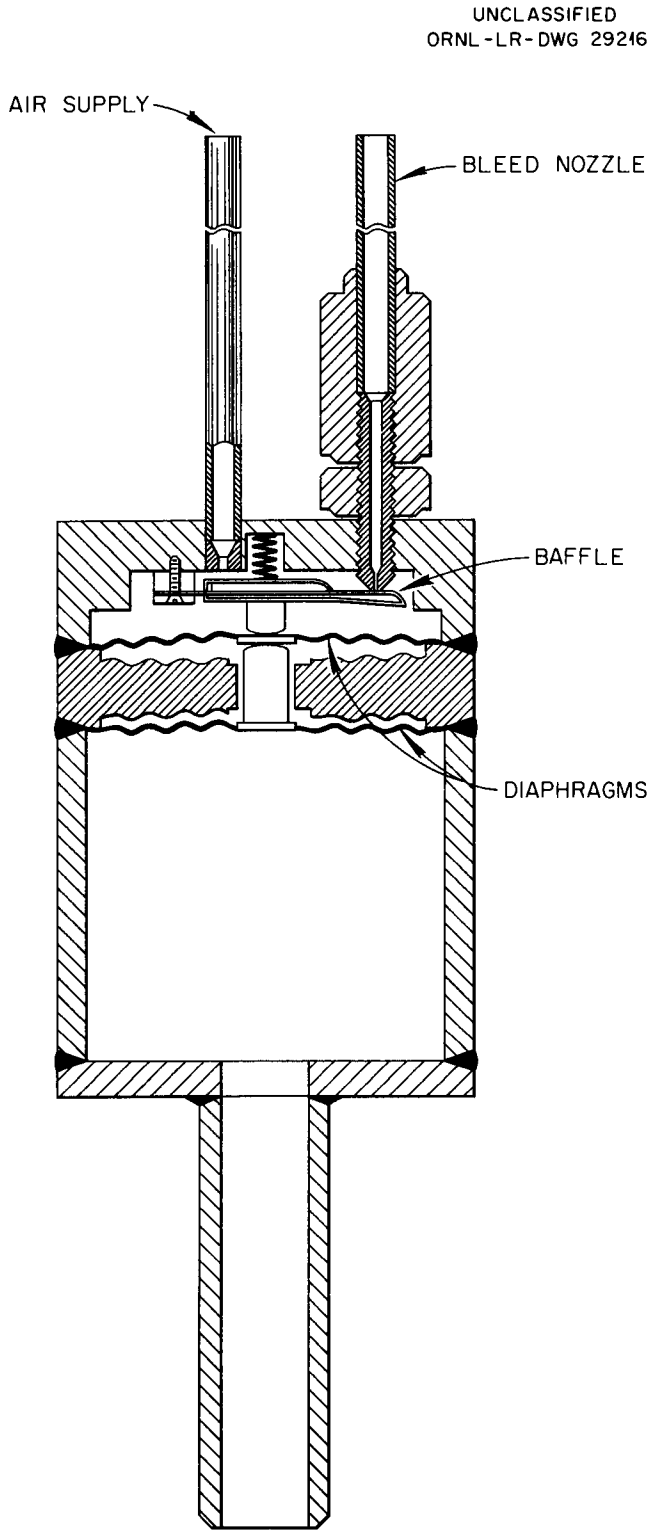

Fig. 16. Foxboro Company Transmitter Model ES 732.

Operation. – Motion of the diaphragm in response to process pressure changes is transmitted directly to a baffle and nozzle located immediately behind the diaphragm capsule. Air admitted to this chamber through an orifice is allowed to escape through the nozzle opening to the atmosphere until an increase in process pressure causes the baffle to cap the nozzle. The pressure buildup in this chamber acts on the back of the diaphragm capsule to oppose the forces exerted by the process pressure on the front of the diaphragm. When these forces are equal, air will again bleed slowly from the nozzle to prevent further pressure buildup in the chamber. By measuring the chamber pressure with conventional methods, an output indication is obtained which is directly proportional to the process pressure.

Test Results. – A typical family of calibration curves for prototype unit No. 1 is given in Fig. 17. Speed-of-response tests were not run because of substandard calibration results. A tabulation of calibration data on all units tested appears in Table 1.

Because of the excessively high zero shift due to temperature, and lack of linearity, further testing was not done.

Item No. 5. Associated Valve & Engineering Company Model 1250X

Cost. – $680.00

Description. – This unit (Figs. 18 and 19) is identical in operation with the two units just described (items No. 2 and 3), except that the sensor assembly employs a 0.025-in.-thick diaphragm rather than a bellows to operate the push rod.

Test Results. – A typical family of calibration curves for prototype unit No. 5 is given in Fig. 20. Speed-of-response tests were not run. A tabulation of calibration data on all units tested appears in Table 1.

Only one of the six prototype units was successful. The one-ply 0.025-in.-thick diaphragm with insufficient corrugations produced an "oil can" effect if either the input pressure was applied suddenly or the air supply failed. Thereafter the transmitter was inoperative.

The same conditions with regard to nozzle manipulation at elevated temperatures for zero adjustments apply to this transmitter as those mentioned in items No. 2 and 3.

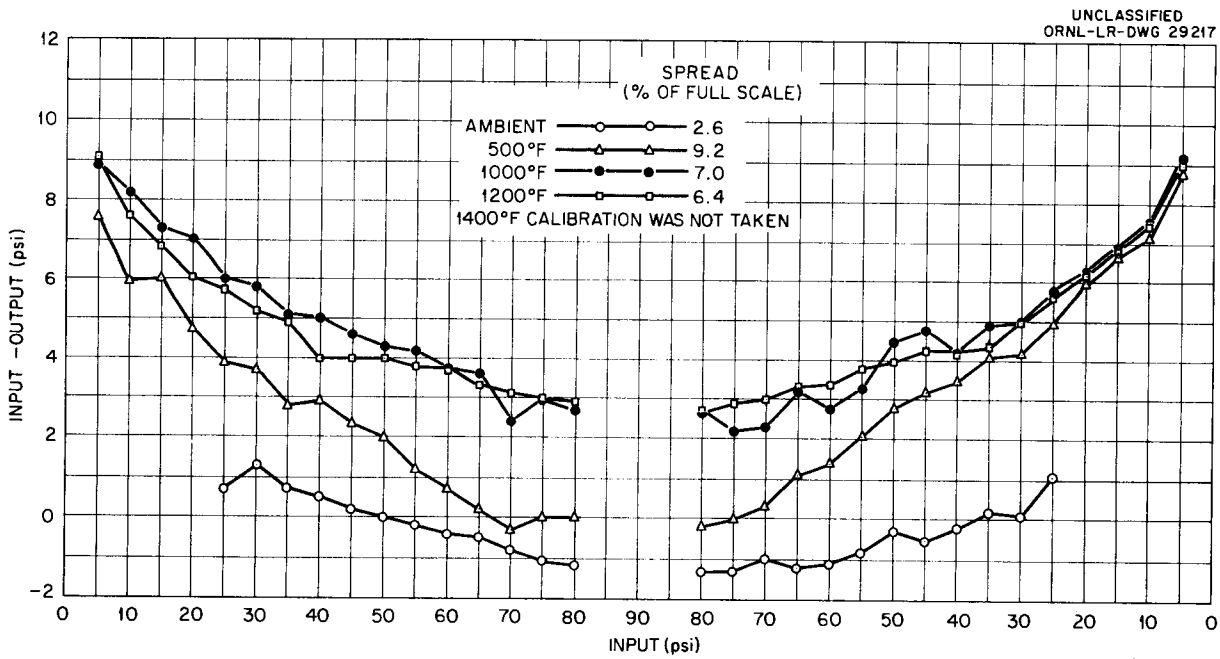

Fig. 17. Typical Calibration Curves for Foxboro Company Transmitter Model ES 732, Prototype Unit No. 1. Range 0–100 psi.

UNCLASSIFIED
PHOTO 27198

Fig. 18. Associated Valve & Engineering Company Transmitter Model 1250X.

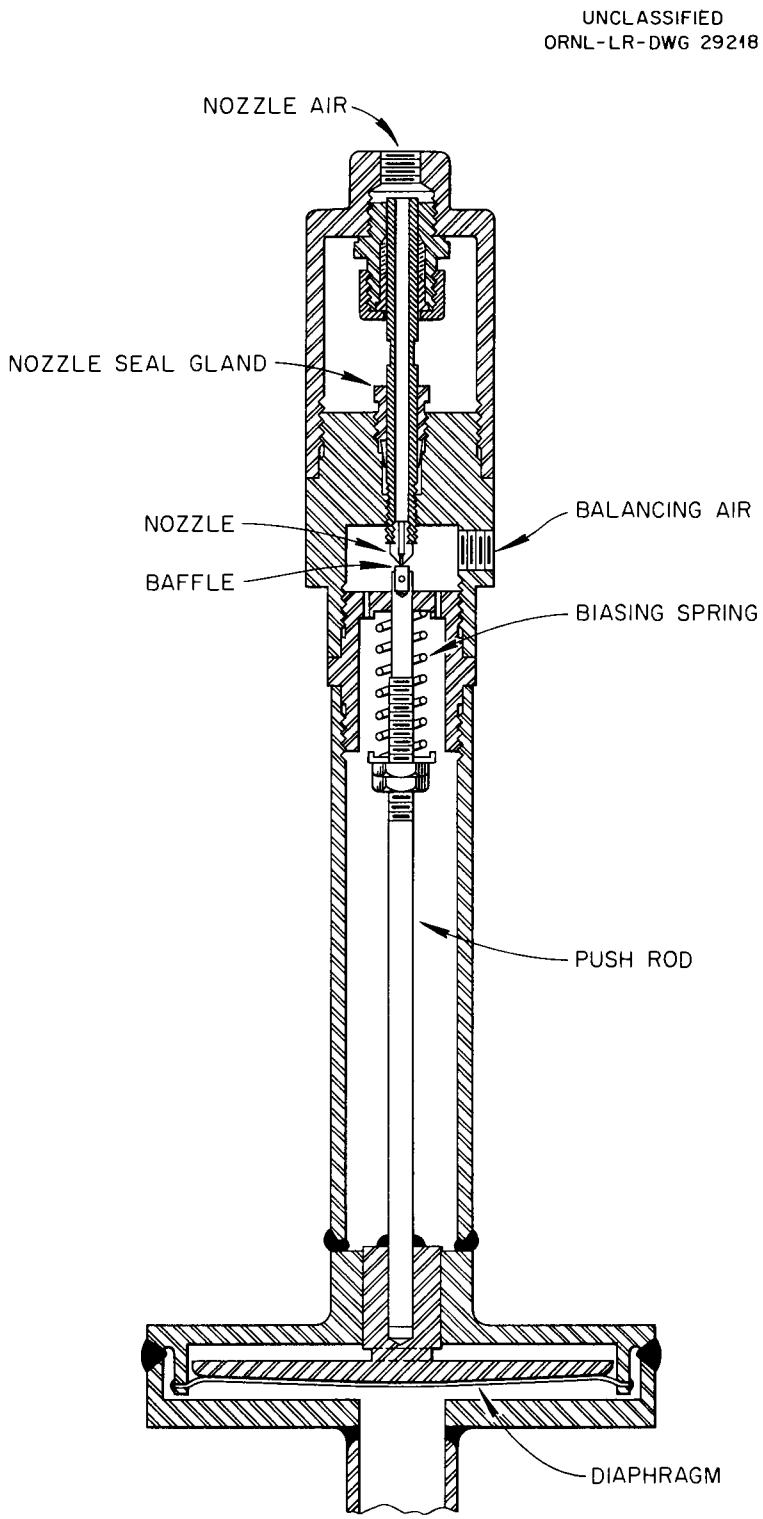

Fig. 19. Associated Valve & Engineering Company Transmitter Model 1250X.

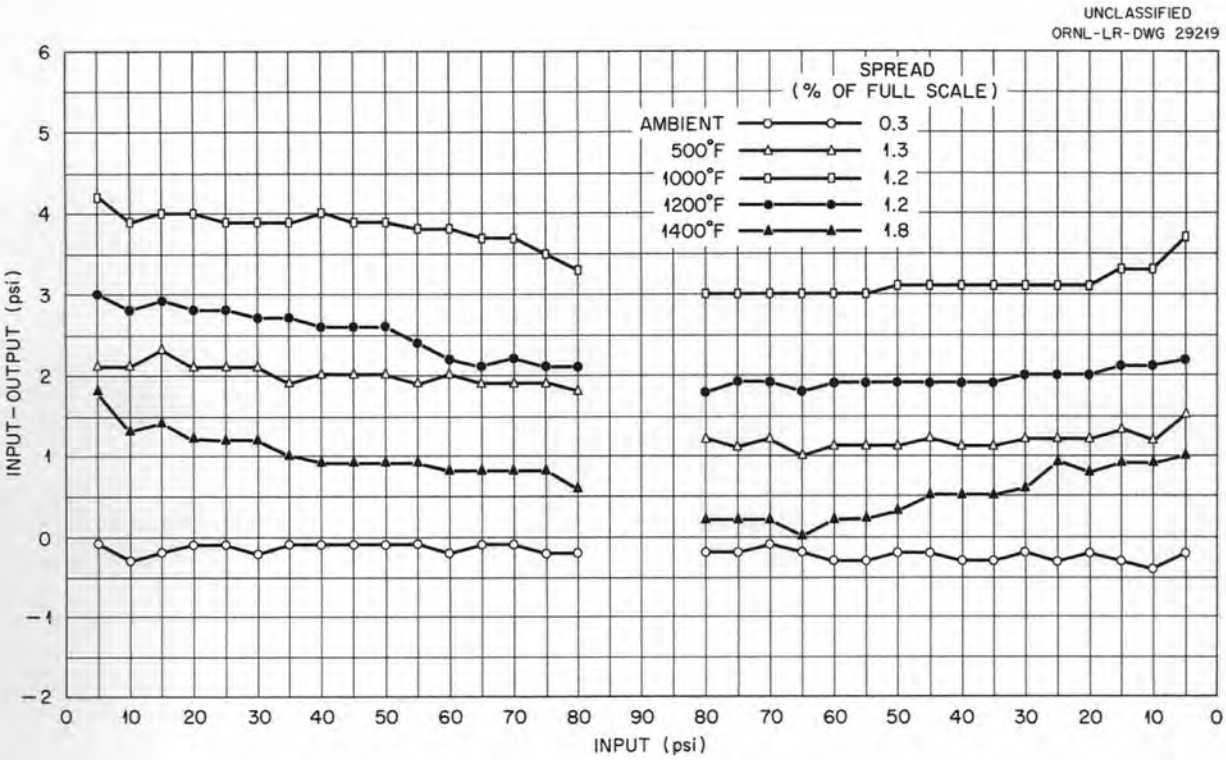

Fig. 20. Typical Calibration Curves for Associated Valve & Engineering Company Transmitter Model 1250X, Prototype Unit No. 5. Range 0–100 psi.

Item No. 6. Taylor Instrument Companies Model IED 21678AA

Cost. – $662.50.

Description. – See Fig. 21.

Sensor. – The sensor is identical with that of item No. 1.

Transmitter. – The transmitter is a four-leg unbonded strain-gage element. Five-volt d-c excitation produces an output signal of 10 mv for full-range input pressure (2.0 mv/v sensitivity).

Operation. – Forces developed by the Bourdon spring are transmitted via a mechanical calibrating linkage to displace the strain-gage element. Conventional methods are employed to indicate or record the output signal.

Test Results. – A typical family of calibration curves is given in Fig. 22. Speed-of-response tests revealed these units to be faster than the recording equipment on hand, and therefore they were deemed acceptable.

Examination of Fig. 22 will reveal that these transmitters fulfill the design criteria. Several refinements, however, are required to make them suitable for production use. The units were found

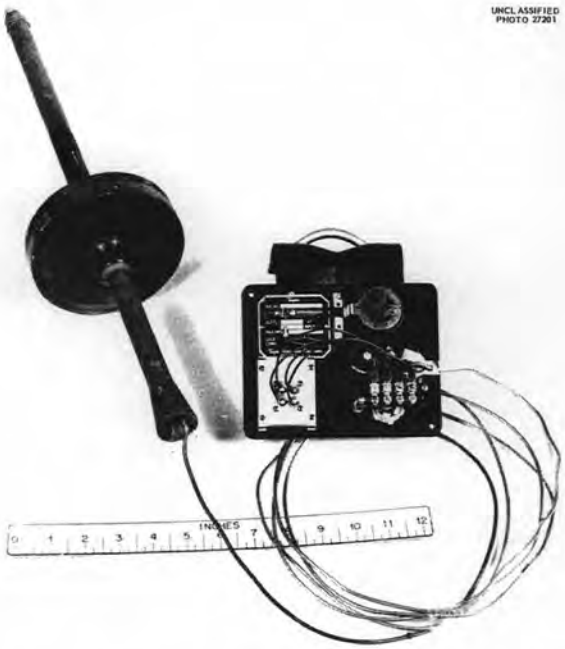

Fig. 21. Taylor Instrument Companies Transmitter Model IED 21678AA.

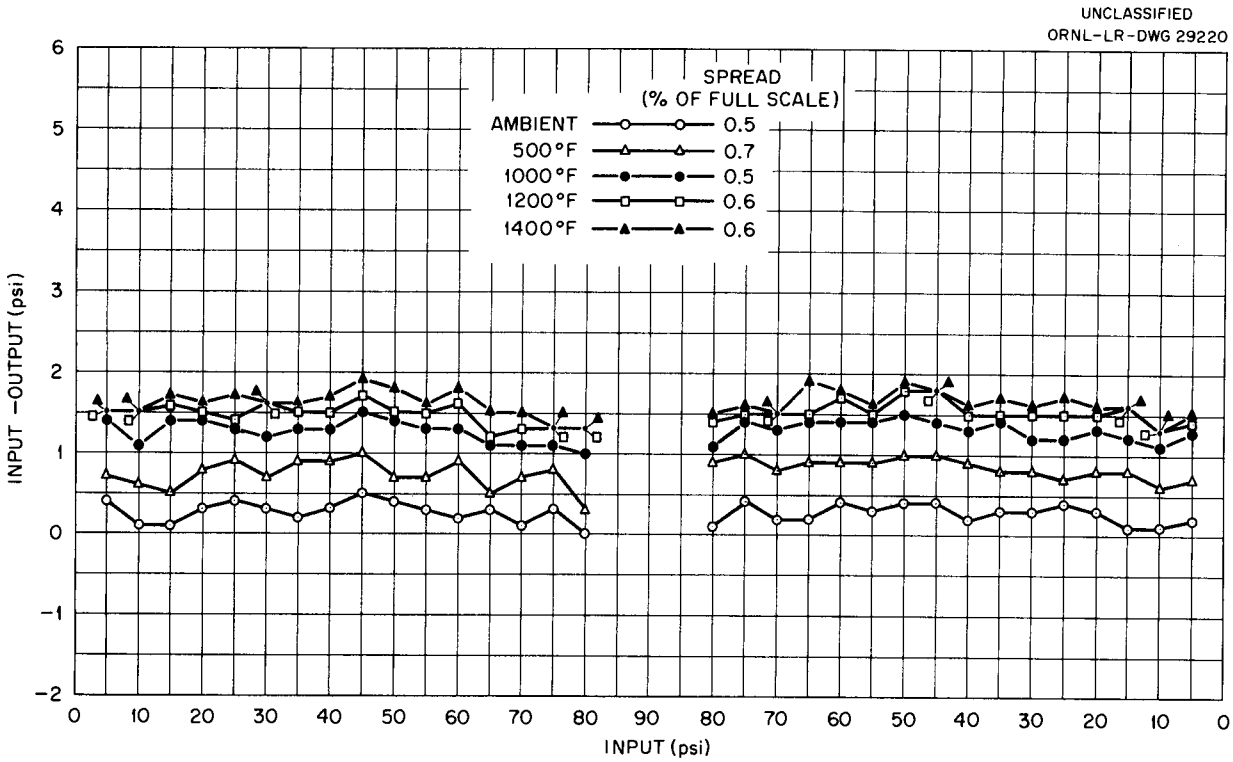

Fig. 22. Typical Calibration Curves for Taylor Instrument Companies Transmitter Model IED 21678AA. Range 0–100 psi.

to have a marked zero shift when the case cover screws were tightened, and were quite susceptible to vibration. In addition, a fine zero adjusting screw would be required for field service. These refinements were incorporated in the next lot of transmitters and are discussed in item No. 11.

To eliminate the effects of excitation voltage variations it was decided to utilize the voltage-ratio method of readout. A Minneapolis-Honeywell (Brown L2 circuit) vertical-scale indicator was selected and used for this purpose. A typical measuring circuit schematic is given in Fig. 23. See item No. 11 for additional comments.

Item No. 7. Taylor Instrument Companies Model X-226 RN 1103

Cost. – $632.45.

Description. – See Fig. 24.

Sensor. – The sensor is identical with that of item No. 1.

Transmitter. – The transmitter is a pneumatic motion-balance type providing 3–15 psig output signal and local pressure indication.

Operation. – Forces developed by the Bourdon spring are utilized to move a pointer across a scale for local pressure indication and to position the baffle of a conventional pneumatic transmitter to provide a 3–15 psi output signal.

Test Results. – A typical family of calibration curves is given in Fig. 25. Speed-of-response test results are given in Fig. 26. The overshoot indicated is a product of the transmitter mechanism and not the sensor system. Therefore, the overshoot is evident in the pneumatic output signal but not on the scale indication. A tabulation of calibration data on all units tested appears in Table 1.

This type of transmitter (pneumatic output) was purchased to provide a means of measuring pressures at elevated temperatures during the component-testing phase of operations. The readout equipment required for pneumatic signals is less expensive than that required for electrical signals, and electrical transmission is not mandatory where there is no radiation involved. These applications provided a means of long-term testing for the

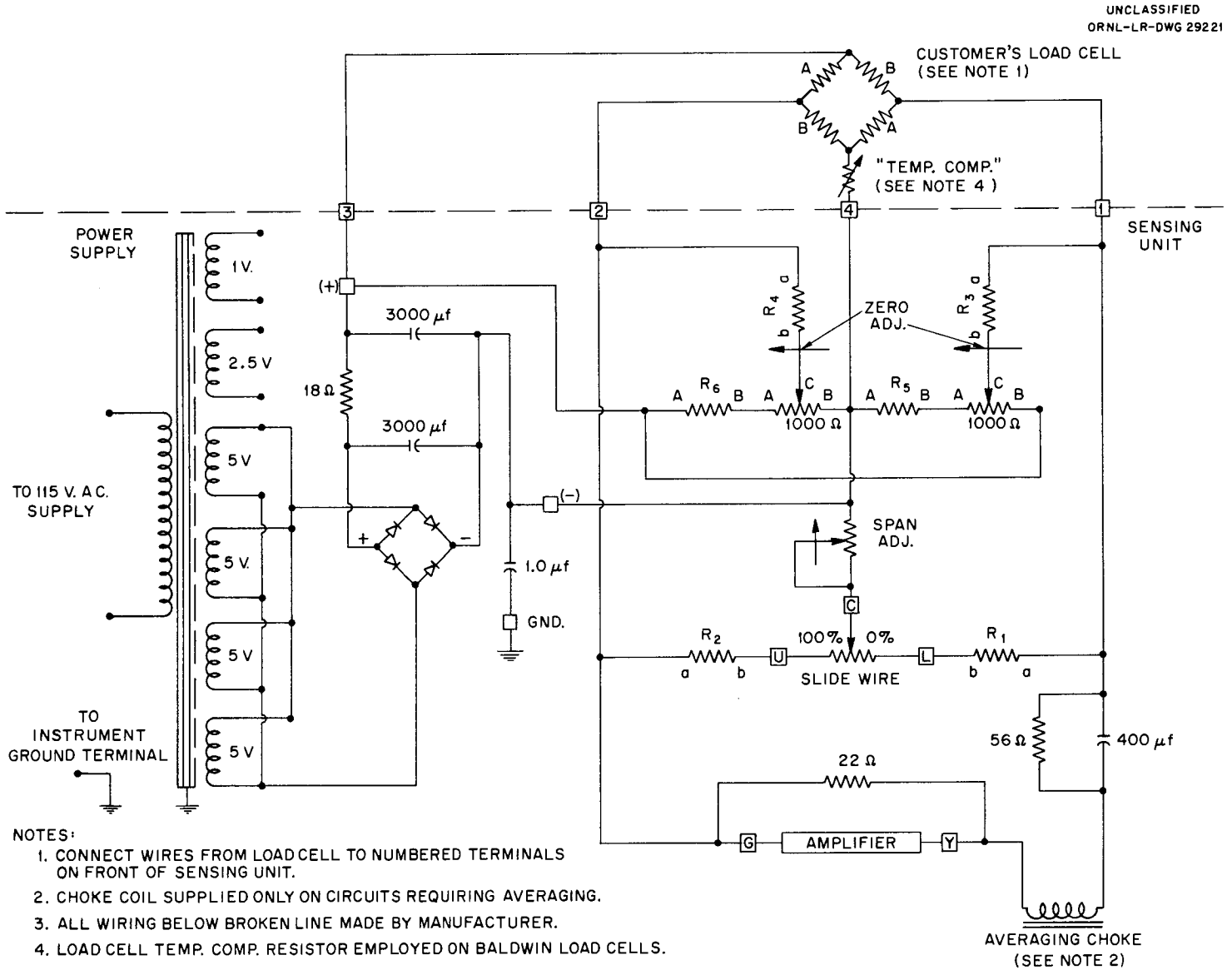

Fig. 23. Brown L2 Strain-Gage Measuring Circuit. Minneapolis-Honeywell Regulator Company.

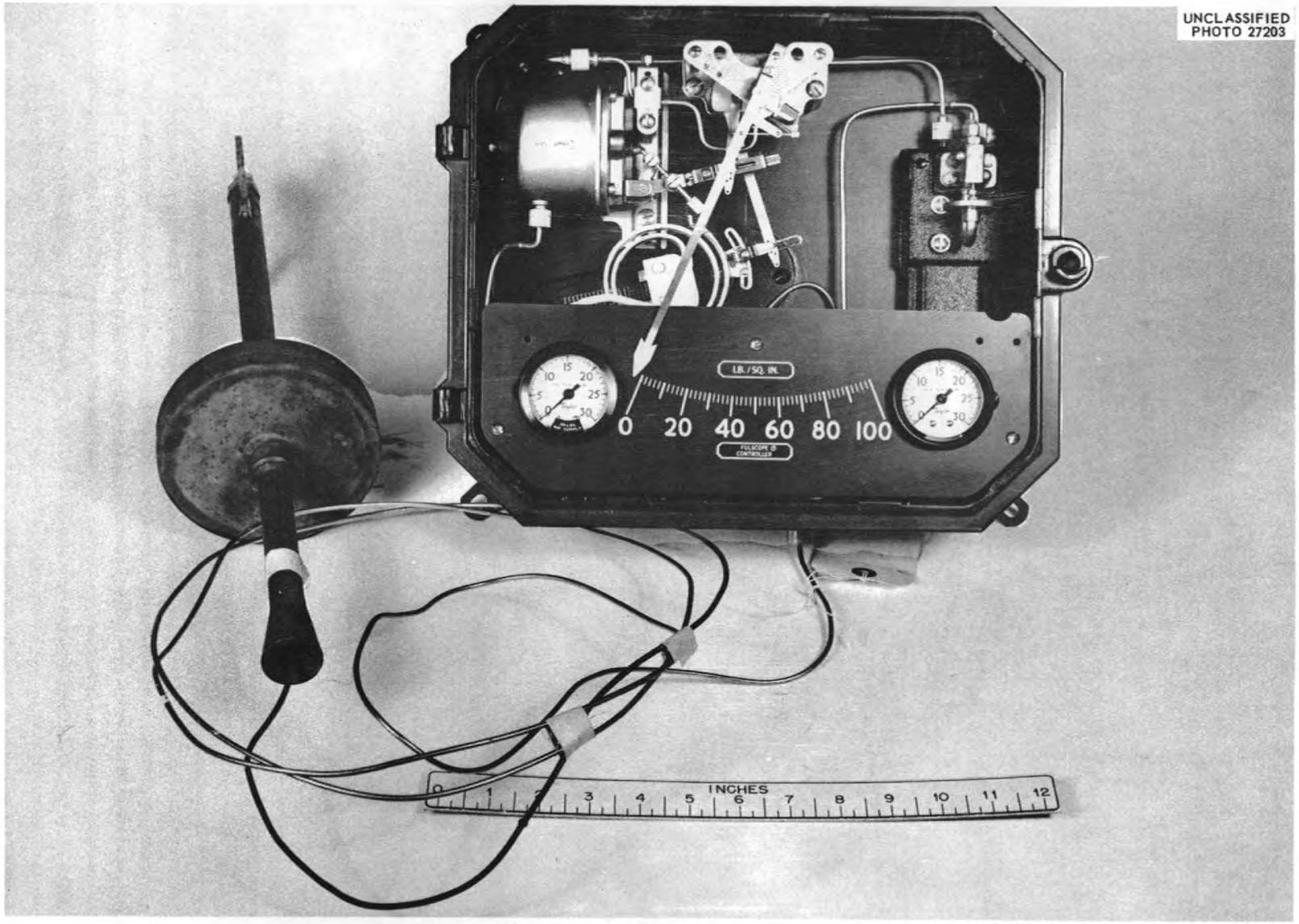

Fig. 24. Taylor Instrument Companies Transmitter Model X-226 RN 1103.

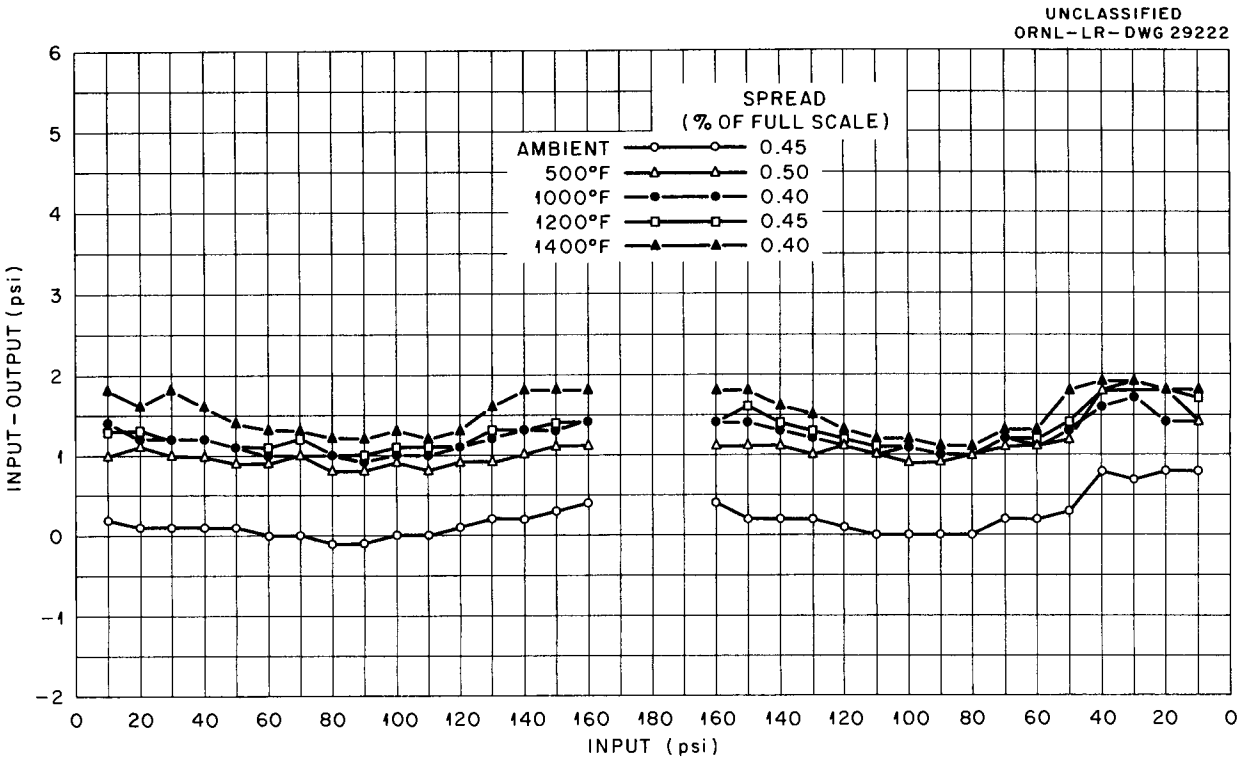

Fig. 25. Typical Calibration Curves for Taylor Instrument Companies Transmitter Model X-226 RN 1103. Range 0–200 psi.

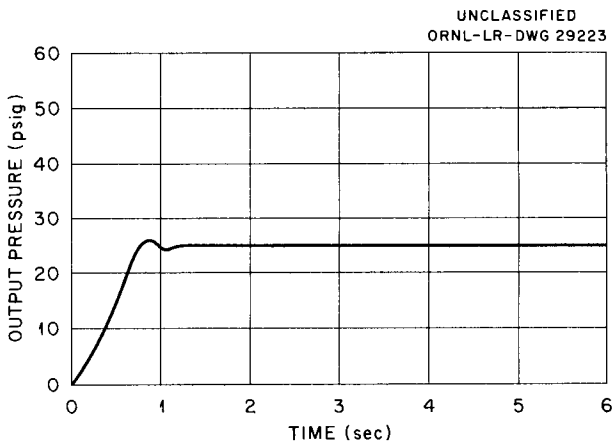

Fig. 26. Speed of Response of Taylor Instrument Companies Transmitter Model X-226 RN 1103. Range 0–50 psi.

transmitters under close to actual operating conditions. More than 12,000 test hours have been run on these units without a single failure.

Item No. 8. Callery Chemical Company Model C (Special)

Cost. – $1,500.00.

Description. – See Figs. 27 and 28.

Sensor. – The sensor consists of a fabricated-type Inconel bellows (Breeze Corporations, Inc., Union, N.J.) in all-welded Inconel housing.

Transmitter. – The transmitter is a differential transformer designed to operate into a standard Atcotran model 6104A indicator.

Operation. – Bellows deflections resulting from process pressure changes are transmitted via a push rod to displace the core of a differential transformer. Motion of the bellows and push rod

UNCLASSIFIED
PHOTO 27350

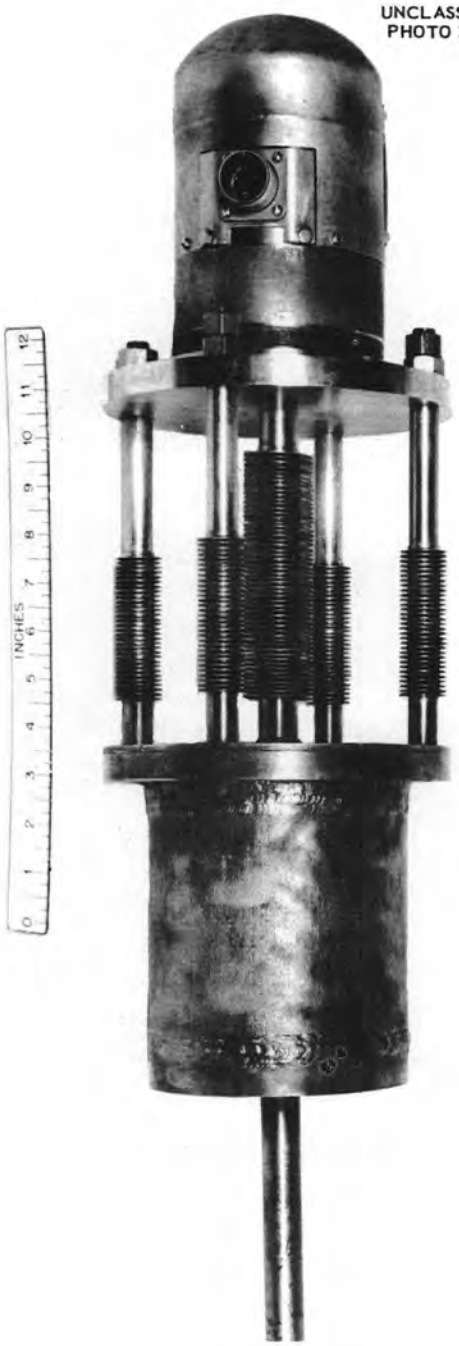

Fig. 27. Callery Chemical Company Transmitter Model C (Special).

UNCLASSIFIED
ORNL-LR-DWG 29224

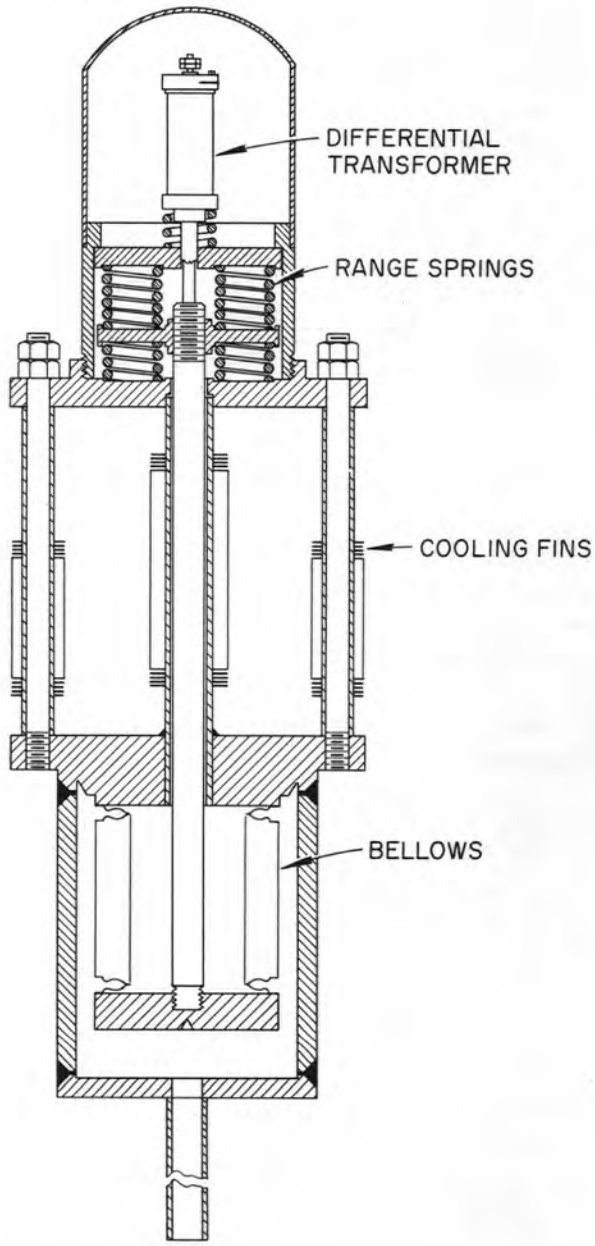

Fig. 28. Callery Chemical Company Transmitter Model C (Special).

is limited by, and span is adjusted by, a large spring working on the upper end of the push rod in opposition to the bellows. Conventional methods are employed to indicate or record the output signal from the differential transformer.

Test Results. – A typical family of calibration curves for prototype unit No. 5 is given in Fig. 29. Because recording readout equipment was not available for these units, it was necessary to time the indicating pointer to determine speed of response. A 50%-full-scale step change applied to the input produced a true output signal indication in 2.5 sec on the average. A tabulation of calibration data on all units tested appears in Table 1.

These transmitters are by far the largest and most cumbersome units tested. Installation is difficult because the process piping will not support the transmitter, and the application of insulation is hampered by their irregular configuration.

Extreme difficulty was experienced due to a-c pickup from the Calrod heaters employed on the body of the transmitter. This situation was partially relieved by inserting a Mumetal shield (Millen 80802B) over the differential transformer under the protective cap.

The adjustments within the transmitter were found to be very difficult to maintain, and the span and zero adjustments within the recorder much too sensitive. These settings would not hold over long periods.

The application of Thermon heat transfer medium (Thermon Mfg. Co., Houston, Texas) around the Calrods on the outside of the bellows housing resulted in a more even distribution of heat over this large area. Figure 30 shows the condition of the Thermon after several weeks of test operation at 1200°F. Although the material was brittle, it was still very much in contact with the Calrods and housing surface.

Item No. 9. Manning, Maxwell & Moore Model 185 (Special)

Cost. – $1,000.07.

Description. – See Figs. 31 and 32.

Sensor. – The sensor consists of a NaK-filled tube system employing single-ply (0.025-in.) diaphragm construction in all-welded Inconel housing.

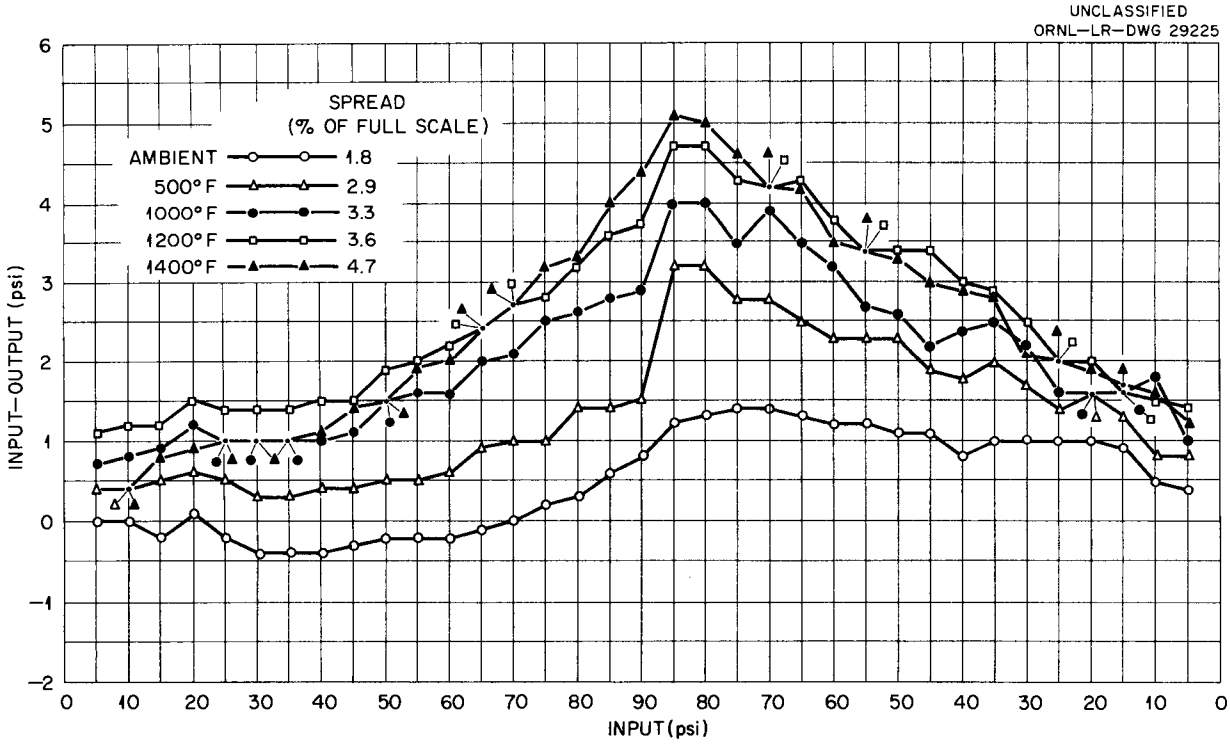

Fig. 29. Typical Calibration Curves for Callery Chemical Company Transmitter Model C (Special), Prototype Unit No. 5. Range 0–100 psi.

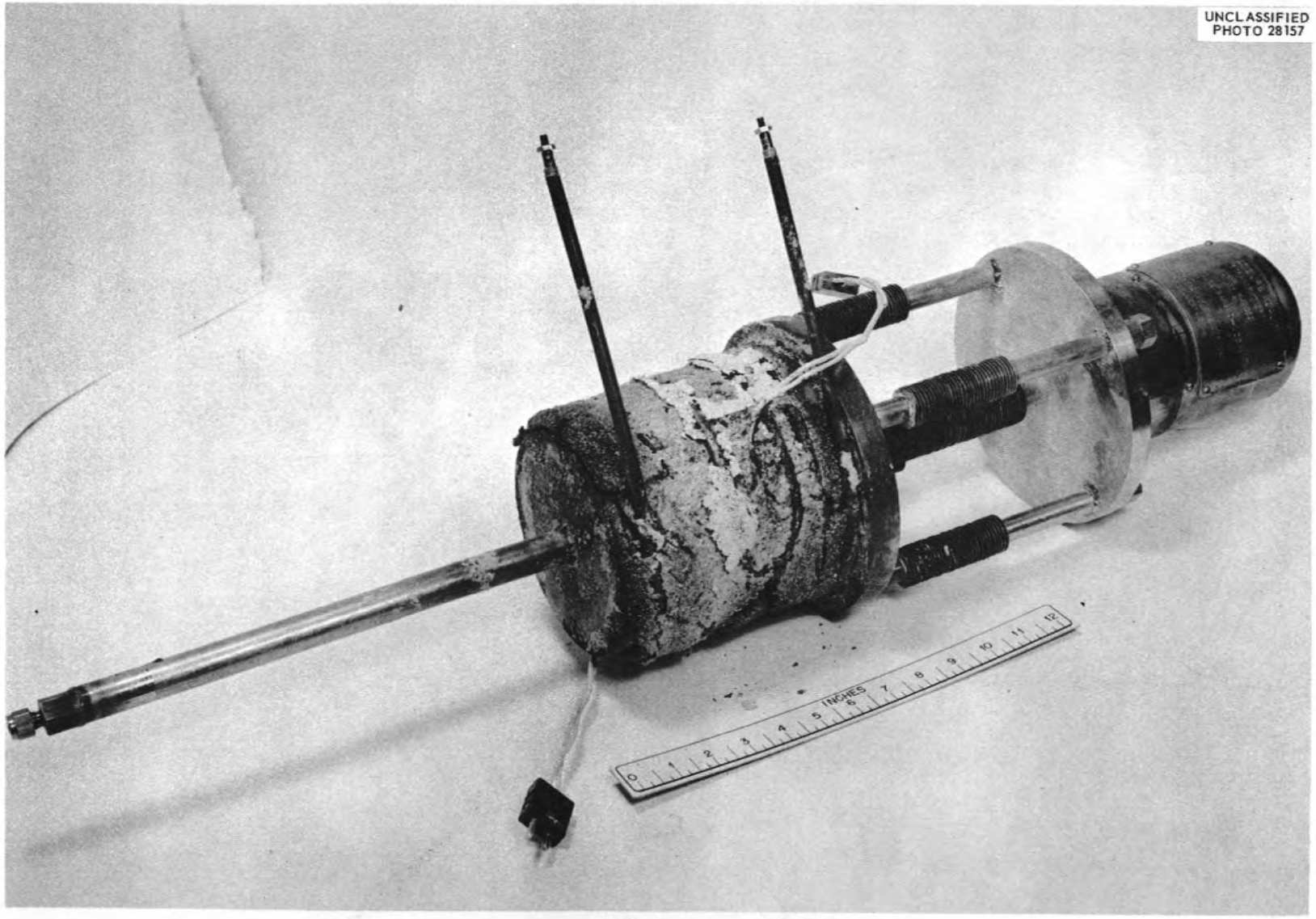

Fig. 30. Callery Chemical Company Transmitter Model C (Special) with Calrod Heaters and Thermon Heat Transfer Medium Applied to Bellows Housing. Shown after test operation at 1200°F.

UNCLASSIFIED
PHOTO 28782

Fig. 31. Manning, Maxwell & Moore Transmitter Model 185 (Special).

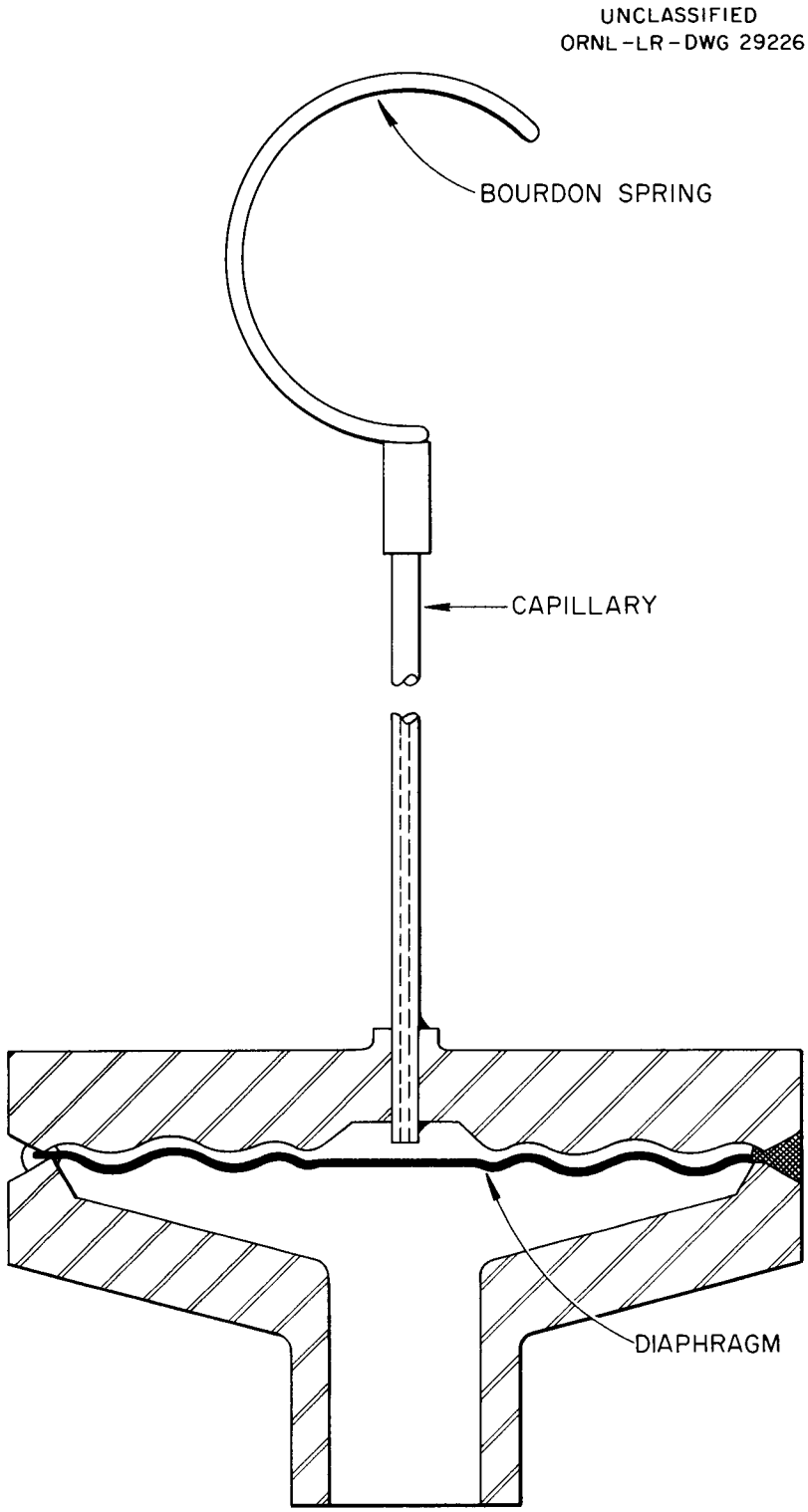

Fig. 32. Manning, Maxwell & Moore Transmitter Model 185 (Special).

Transmitter. – The transmitter is an American Microsen balance system employing a tuned-grid, tuned-plate vacuum tube oscillator. Feedback current variations of 1 to 5 ma dc constitute the output signal and are directly proportional to input pressure variations.

Operation. – Pressure exerted on the diaphragm by the process fluid is hydrostatically transmitted via the capillary out of the hot zone to a Bourdon spring termination within the transmitter case. Motion of the Bourdon spring is used to displace a force beam in close proximity to an oscillator coil. As the force beam moves, the coil inductance increases to diminish the amplitude of oscillation. The resulting decrease in bias voltage produces an increase in plate current through the oscillator tube. A measured portion of the plate current flows through a coil which is mounted on the force beam and acts in opposition to the motion of the Bourdon spring. When the force of the Bourdon spring is completely opposed by the force of the coil, the output current through the coil becomes a measure of the input pressure signal.

Test Results. – A typical family of calibration curves for prototype unit No. 1 is given in Fig. 33. Speed-of-response test results are given in Fig. 34. A tabulation of calibration data on all units tested appears in Table 1.

The span and zero adjustments on this unit are located under the transmitter cover. After adjustments are made, a slight shift in both span and zero results when the cover is put in place. The

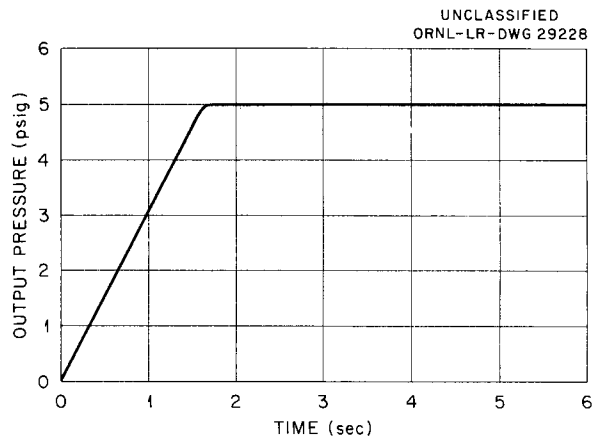

Fig. 34. Speed of Response of Manning, Maxwell & Moore Transmitter Model 185 (Special).

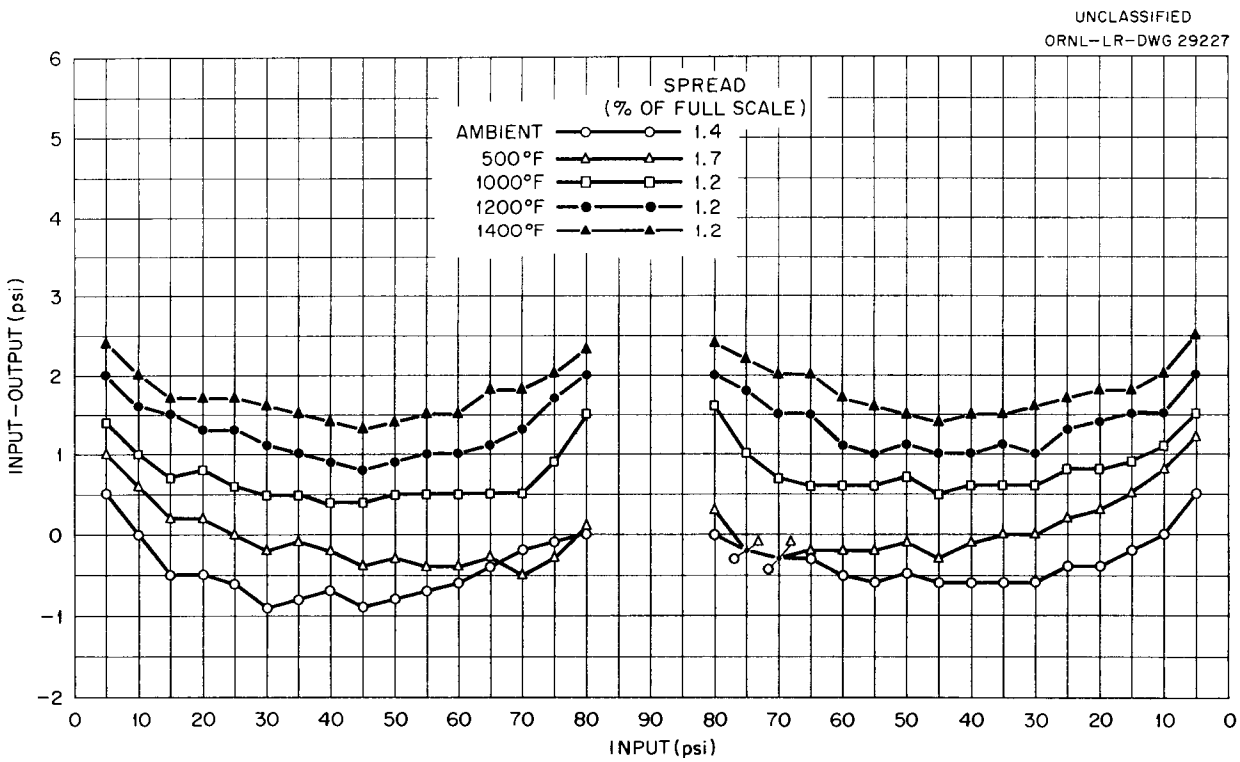

Fig. 33. Typical Calibration Curves for Manning, Maxwell & Moore Transmitter Model 185 (Special), Prototype Unit No. 1. Range 0–100 psi.

zero adjustment is very sensitive and quite difficult to adjust because of lost motion in the mechanism.

These units were the second attempt by the vendor to produce a satisfactory transmitter for this type of service. For this reason, long-term stability and corrosion resistance tests are not complete.

Item No. 10. Crescent Engineering & Research Company Model PGH-2-100

Cost. – Received on consignment; cost unknown.

Description. – See Fig. 35.

Sensor. – The sensor is a formed three-ply (0.008 in. each) Inconel bellows.

Transmitter. – The transmitter is a variable-inductance-type transducer operating in a bridge circuit with 2-kc excitation.

Operation. – Forces resulting from application of the process pressure to the inside of the bellows are transmitted via the push rod to position a core within an inductance coil. Span and zero adjustments are obtained through a pair of heavy opposing springs also acting on the push rod. Conventional methods are used to derive a suitable output signal from the changes in inductance.

Test Results. – Calibration curves for this unit will not be published due to difficulties which masked the true merit of the transmitter. The application of pressure to the transmitter input caused the bellows to deflect from its axis, which resulted in excessive friction between the core and the coil. A number of attempts were made to straighten the bellows, but each time the unit was heated it would again go out of line.

The unit was returned to the vendor with these findings.

Item No. 11. Taylor Instrument Companies Model 706 TN 1103

Cost. – $370.00.

Description. – See Fig. 36.

Sensor. – The sensor is identical with that of item No. 1. Spiral armor was added to the capillary as added protection.

Transmitter. – The transmitter is identical with that of item No. 6 with the following refinements:

1. the addition of a case-temperature compensating resistor,
2. a shock-mounted subbase for vibration isolation,
3. a fine zero adjustment,
4. improved case design.

Operation. – The operation is identical with that of item No. 6.

Test Results. – A typical family of calibration curves for production unit No. 1 is presented in Fig. 37. Speed-of-response tests revealed these units to be faster than the recording equipment on hand, and therefore they were deemed acceptable. A 50%-full-scale step change applied to the input resulted in a square-wave record on a 1-sec-full-scale recorder employing a chart speed of 480 in./hr. A tabulation of calibration data on all units tested appears in Table 1.

This unit incorporates the changes discussed in item No. 6.

UNCLASSIFIED
PHOTO 27347

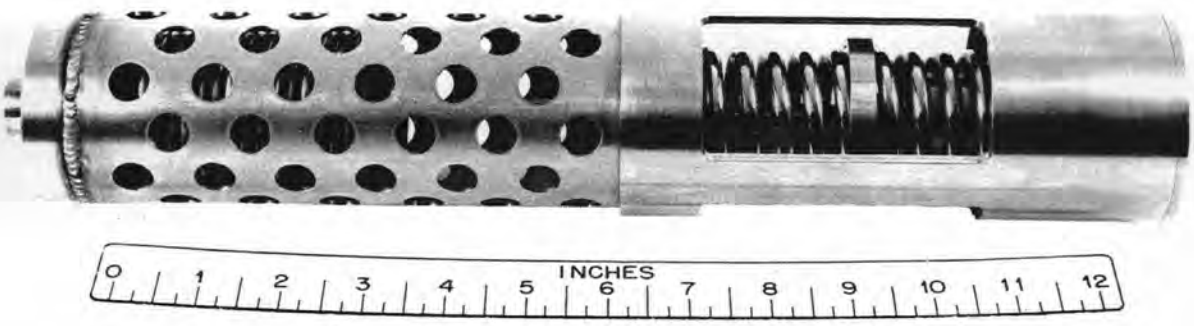

Fig. 35. Crescent Engineering & Research Company Transmitter Model PGH-2-100.

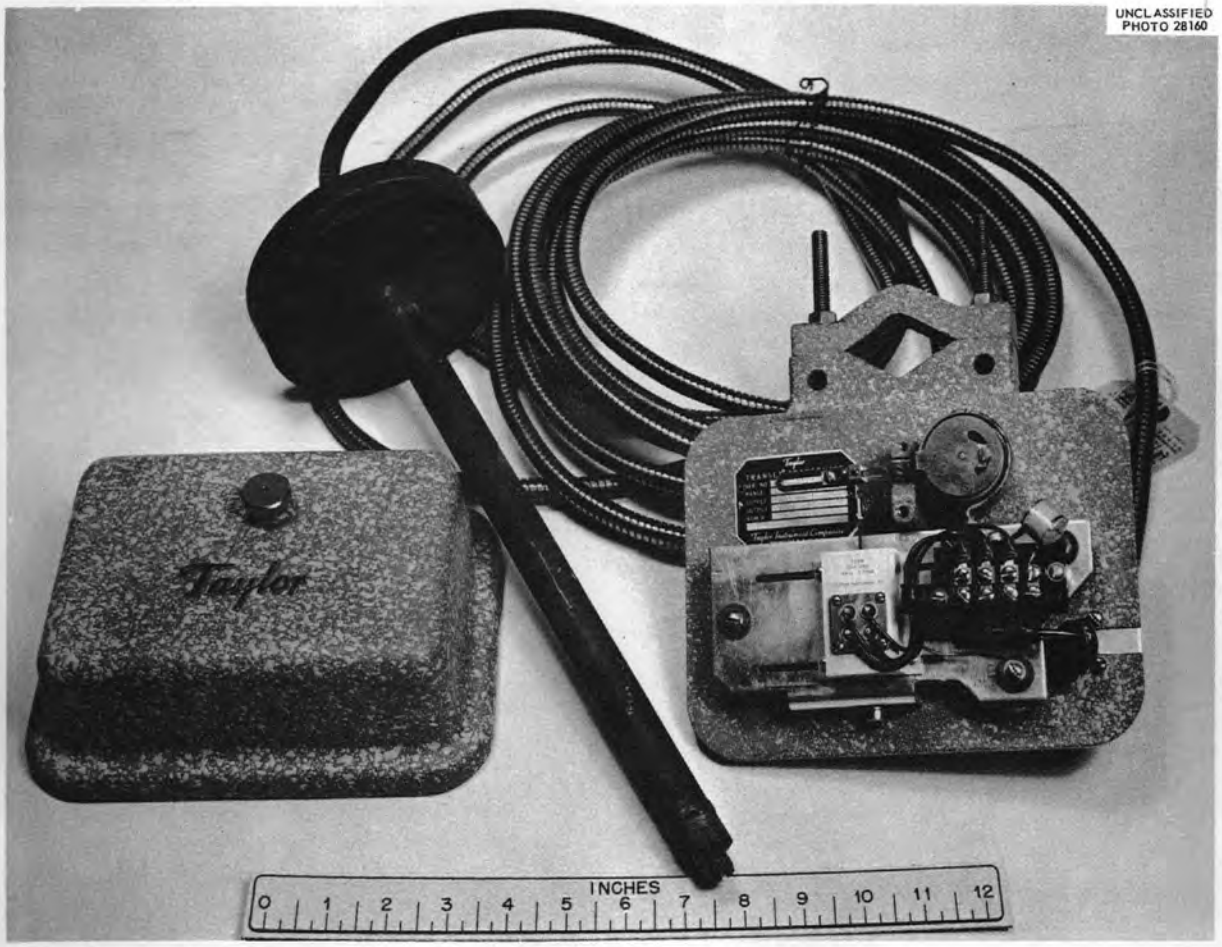

Fig. 36. Taylor Instrument Companies Transmitter Model 706 TN 1103.

The shock-mounted subbase within the transmitter case isolates vibration quite effectively and prevents zero shift when the case cover screw is tightened. The zero adjustment is smooth and not too sensitive but rather limited in range. The addition of a case-temperature compensating resistor minimizes the shift to less than 3% of full scale when the case temperature is raised from ambient to 200°F.

These units more than fulfill the design criteria and at present are being manufactured and used at this installation in quantity.

The same readout equipment mentioned in item No. 6 was used for readout purposes.

CONCLUSION

The results of this program have produced several high-temperature pressure transmitters of merit, each with its attractive features and inherent disadvantages that must be considered in making the final choice. For this reason, it is necessary to decide which transmitter most nearly complies with the design criteria.

The unit that currently meets the majority of our requirements is the Taylor Instrument Companies Model 706 TN 1103. The following are reasons for this choice:

1. Accuracy is best (0.47%-full-scale average).
2. Zero shift is least (ambient to 1400°F).
3. D-c electrical output is employed.
4. Strain gage can be zeroed and spanned remotely.
5. Unbonded strain gage does not contain organic insulators which can be damaged by radiation.
6. Speed of response is best (step response).

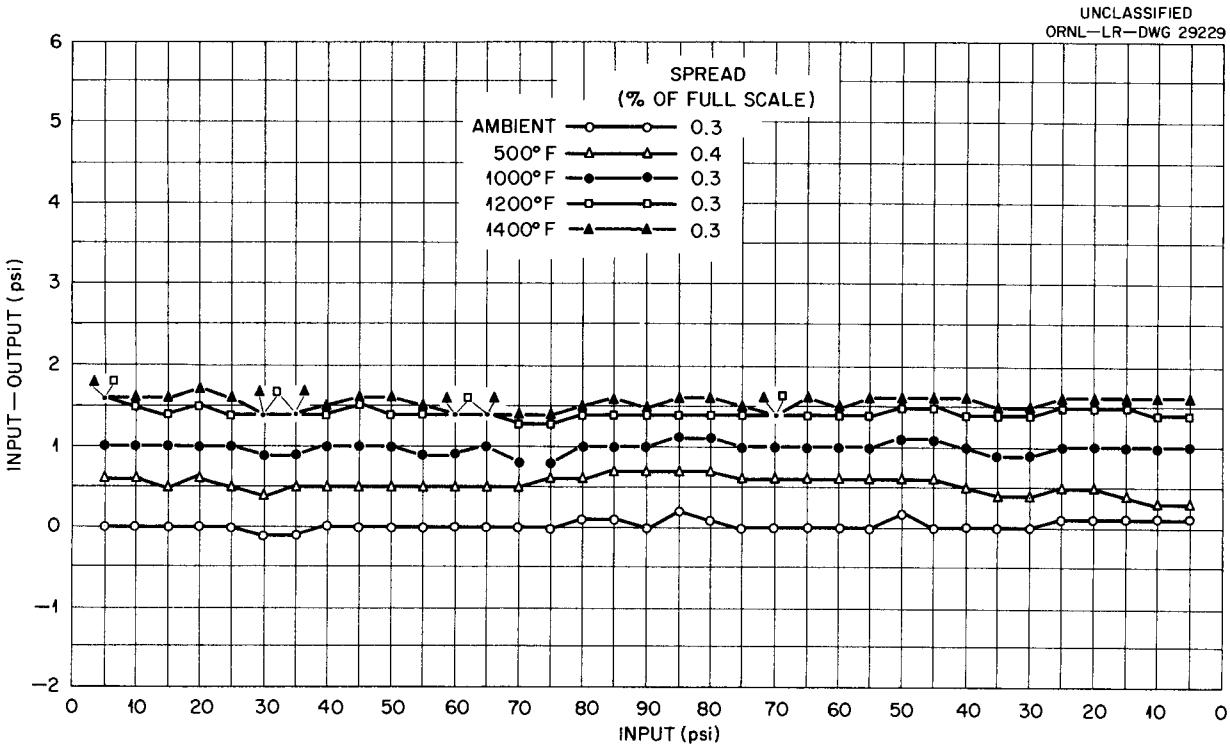

Fig. 37. Typical Calibration Curves for Taylor Instrument Companies Tronsmitter Model 706 TN 1103, Production Unit No. 1. Range 0–100 psi.

7. Tube-system-type construction permits adjustments on transmitter to be performed away from hot piping.

8. Tube-system-type construction offers double containment of process fluid (see discussion below).

Discussion of Salient Features

Containment. – The containment of process fluids is always enhanced by primary elements that offer an extra barrier should a rupture of the sensing element occur. The tube-system type of construction employed in Taylor and Manning, Maxwell & Moore units offers this added benefit. Should the sensing diaphragm rupture, the process fluid would still be contained within the tube-system capillary and Bourdon spring, thus preventing a leak to atmosphere in the system and any dangers associated therewith. The small amount of NaK contained in the tube system would of course mix with the process fluid.

The double-diaphragm construction of the Foxboro unit offers this double-containment feature without the disadvantage of contamination of the process fluid from a filling fluid. These units, however, could not be considered because of their excessive zero shift due to temperature.

Hot Zone Isolation. – A review of the photographs will reveal that several methods were employed by manufacturers to isolate the transmitting unit from the severe temperatures at the sensing element. This was done, of course, because most transmitting elements would be inoperative at these temperatures. Of the various methods employed, the tube-system type of isolation seems to be the most satisfactory in that it completely removes not only the transmitting element from the hot zone but personnel as well. Adjustment of span and zero, as well as inspection of the transmitting element, can be performed without subjecting personnel to the hazard of burns.

Flow Measurement. – The problem of measuring flow at high temperatures was readily overcome with the advent of accurate high-temperature pressure measuring devices. Many currently used primary flow elements, such as orifices, flow nozzles, and venturis, if made of proper materials, are suitable for high-temperature use. Flow,

therefore, can be calculated by measuring the pressure upstream and downstream of the primary device with a pair of pressure transmitters. Direct readings of differential pressure can be derived from pneumatic units by feeding the output signals to standard differential pressure transmitters. Electrical output signals can be connected to subtract, and the difference signal can be read on a single instrument.

The accuracy of flow measurements made by this method is largely dependent on how closely a pair of transmitters can be matched calibration-wise. All Moore transmitters used for flow service had to be roasted at 1200°F for 16 hr before calibration curves suitable for matching purposes could be produced.

Taylor units were sufficiently linear to eliminate this roasting and matching operation. Units of other manufacturers were sufficiently nonlinear to rule out this type of service.

Transmitter Ranges. – Transmitters of low range are required for flow measurement if the burden on the system imposed by the primary flow element is to be minimized. Because corrosion resistance requirements dictated a 0.025-in.-thick sensor, a transmitter span less than 50 psi could not be realized without a substantial increase in the dimensions of the sensing element. This problem is currently under investigation, and units featuring a 0–20 psi range are being built by Taylor Instrument Companies for test.

If only a portion of the range of the pressure transmitters is utilized on a flow application, a readability advantage can be obtained by spanning the differential unit to cover only that portion of the range of the pressure transmitter which is being utilized. (For example, the orifice may be designed to produce a 10-psi differential pressure at full flow. Although the use of 0–50 psi pressure transmitters may be required, the differential pressure transmitter can be adjusted to a range of 0–10 psi instead of 0–50 psi.)

Units having a range of the order of 0–5 psi are feasible if diaphragm thicknesses of approximately 0.005 in. can be tolerated.

Dependability. – Only one of the units described in this report can function if all services fail. The indicating pointer of the Taylor 226 RN 1103 model is positioned solely by forces derived from the process fluid and, therefore, continues to function in the absence of electrical or pneumatic services. The pneumatic output signal, however, would not be present for transmission purposes.

There has been some concern over the possibility of NaK-carried impurities plugging the small-bore capillary used in these transmitter tube systems. Exacting techniques are employed by both manufacturers who have produced this type of system to ensure against this possibility. Since the inception of this program we have never had a case of plugging in a transmitter tube system.

Vibration. – The problem of vibration has never been a major consideration in this effort. The advent of the tube-system-type transmitter has provided the necessary isolation between the process piping and the transmitter case. Some additional isolation was required in the strain-gage model (item No. 11) where extremely small motions are sensed. The floating subbase in the Taylor 706 TN 1103 model satisfied this requirement.

It is anticipated that some shock mounting may be required for the case of the Manning, Maxwell & Moore transmitter when these units are used on an actual process application.

Evacuation and Overpressure. – For economic reasons, overpressure and evacuation tests have been limited to transmitters which are considered suitable for process use.

Taylor units 226 RN 1103 and 706 TN 1103 and the Moore model 15 (special) units have been pressurized to 150% of range and evacuated while hot without significant zero shift.

Evacuation of the Moore units is accomplished through the use of a subatmospheric connection on the 60NE relay. Proper understanding in the use of this connection is mandatory to prevent damage to the transmitter during the evacuation phase.

Adjustment. – The Taylor 226 RN 1103 transmitter includes an adjustment feature which is noteworthy. A completely separate set of adjustments (for span, zero, and linearity) is provided to calibrate the pointer to the scale. A second set of adjustments for span, zero, and linearity is provided to calibrate the output pressure signal to the motion derived from the pointer. By careful manipulation of these dual adjustments it is possible to minimize the small inherent nonlinearities of the Bourdon that would normally appear in the pneumatic output signal. It is implied, therefore, that accuracies slightly in excess of those tabulated are possible if the requirements will justify the additional time required for calibration by this method.

Table 1. Tabulation of Accuracy Data for All Units Tested

Manufacturer	Item No.	Model No.	Unit No.	Input-Output Deviation (% of full scale)				
				Ambient	500°F	1000°F	1200°F	1400°F
Taylor Instrument Companies	1[a,b]	IED 20949	1	0.7	0.9	0.9	1.3	0.8
			2	1.4	1.5	2.0	1.8	1.9
			3	0.3	0.9	0.5	0.8	1.1
			4	1.1	1.2	1.2	1.2	2.0
			5	1.5	1.5	1.3	1.3	1.2
			6	0.4	0.8	0.3	0.9	0.8
			Average	0.9	1.13	1.03	1.21	1.30
			All-temperature average 1.11					
Taylor Instrument Companies	7[a,b]	X-226 RN 1103	1	2.0	2.0	2.8	2.6	2.0
			2	1.6	1.4	1.0	1.2	1.8
			3	2.4	2.0	2.2	1.8	2.0
			4	0.5	0.8	0.8	0.9	0.9
			5	0.5	0.3	0.2	0.2	0.3
			6	0.4	0.35	0.45	0.45	0.4
			Average	1.2	1.1	1.2	1.2	1.2
			All-temperature average 1.18					
Taylor Instrument Companies	6[b,c]	IED 21678AA	1	0.4	0.5	0.4	0.3	0.4
			2	0.5	0.6	0.3	0.4	0.5
			3	0.3	0.2	0.2	0.5	0.3
			4	0.3	0.8	0.5	0.5	0.5
			5	0.2	0.4	0.6	0.9	1.0
			6	0.5	0.7	0.5	0.5	0.6
			Average	0.36	0.53	0.41	0.51	0.55
			All-temperature average 0.47					
Taylor Instrument Companies	11[b,c]	706 TN 1103	1	0.3	0.4	0.3	0.3	0.3
			2	0.4	0.6	0.6	0.6	0.6
			3	0.4	0.3	0.4	0.4	0.4
			4	0.6	0.7	0.6	0.7	0.7
			5	0.2	0.4	0.4	0.2	0.3
			6	0.2	0.2	0.1	0.2	0.1
			Average	0.42	0.52	0.48	0.48	0.48
			All-temperature average 0.47					
Moore Products Company	2[a,b]	15 (special)	1	1.3	1.3	1.5	0.9	1.3
			2	2.7	2.7	2.4	2.5	2.8
			3	0.7	1.0	1.8	1.9	1.4
			4	1.4	1.3	1.5	1.7	1.8
			5	1.9	1.5	1.4	1.9	1.6
			6	1.7	2.1	2.3	2.1	2.0
			Average	1.61	1.71	1.85	1.83	1.81
			All-temperature average 1.74					

Table 1 (continued)

Manufacturer	Item No.	Model No.	Unit No.	Input-Output Deviation (% of full scale)				
				Ambient	500°F	1000°F	1200°F	1400°F
Moore Products Company	3[a,b]	15 (special, Breeze bellows)	1	0.4	0.9	0.3	0.3	0.4
			2	0.4	0.7	0.4	0.9	0.5
			3	1.4	1.1	1.1	1.2	1.3
			4	1.4	1.7	1.7	1.6	1.6
			5	0.7	0.5	0.5	0.7	0.6
			6	0.2	0.7	0.2	0.2	0.7
			Average	0.75	0.93	0.70	0.81	0.85
			All-temperature average 0.80					
Associated Valve & Engineering Company	5[a,b]	1250X	5	0.3	0.5	0.9	0.9	1.2
			All-temperature average 0.76					
Foxboro Company	4[a,b]	ES 732	1	2.4	11.1	9.0	8.8	
			All-temperature average 7.82					
Manning, Maxwell & Moore	9[b,d]	185 (special)	1	1.4	1.7	1.2	1.2	1.2
			2	1.5	1.1	0.9	1.6	1.1
			3	1.6	1.5	1.7	1.7	1.5
			4	1.5	1.9	1.9	2.1	1.7
			Average	1.50	1.55	1.42	1.65	1.37
			All-temperature average 1.50					
Callery Chemical Company	8[b,d]	C (special)	1	2.7	3.7	3.8	4.0	5.2
			2	1.4	1.1	1.4	1.3	2.1
			3	1.6	1.5	1.6	1.2	2.5
			4	1.2	1.4	2.2	2.8	3.6
			5	1.8	2.9	3.3	3.6	4.6
			6	1.4	1.1	1.4	1.7	2.5
			Average	1.68	1.95	2.28	2.43	3.41
			All-temperature average 2.35					
Crescent Engineering & Research Company	10[d,e]	PGH-2-100	1	Unsatisfactory performance				

[a] Pneumatic transmitter.
[b] Six units received.
[c] Strain-gage transmitter.
[d] Electrical transmitter.
[e] One unit received.

Transmitter Design Considerations

Capillary Compensation. – Steps were not required beyond the selection of a proper capillary bore diameter to produce a tube system suitable for transmitter use with sufficient capillary compensation.

System Spring Constants. – The most prominent factor to consider during the design of a high-temperature pressure measuring system is to keep most of the spring constant of the system in the cool zone. Observance of this practice will minimize the effect of sensor temperature changes on the system. In the case of the tube system, the thinner and more flexible the sensing diaphragm in relation to the Bourdon spring, the less the zero shift from ambient to high temperature. In the case of non-tube-system types like the Callery and Crescent units, the stiffer the opposing springs with respect to the bellows, the smaller the temperature effect.

A greater minimization of temperature effect can be realized, therefore, if a reduction in diaphragm or bellows thickness can be tolerated. Along this same line, a diaphragm employing a corrosion-resisting cladding material might result in a thinner component than one made of a solid material with the same corrosion resistance.

Multi-ply diaphragms and bellows offer one of the simplest means of attaining sensor flexibility and are resorted to when sensor thickness requirements, as dictated by corrosion resistance, become excessive.

Tube System Fill Fluids. – NaK, a near-eutectic mixture of sodium and potassium, is the only fill fluid found as a result of this effort which exhibits the required characteristics for tube systems in this temperature range. The filling fluid must possess the following qualities to be acceptable:

1. be fluid at low ambient temperatures (20°F),
2. not boil at elevated temperatures (1500°F),
3. have a sufficiently low viscosity to permit use in small-bore capillaries without affecting speed of response,
4. have a temperature coefficient of expansion compatible with reasonably small capillary bores to make capillary compensation possible.

The inherent drawback to NaK is the fire hazard it presents in the presence of water or moisture, and the severe burns it can produce if in contact with the body. Thorough cognizance of its characteristics and of the safety precautions required is necessary before its use is considered.

For these reasons, an all-welded system is mandatory, and the following section on welding should not be overlooked.

There are gases which can meet the above-mentioned specifications as a filling medium, but the nonlinear scale caused by compressibility was deemed unacceptable.

Welding Comments. – Particular attention should be paid to the joint design employed in welding multi-ply diaphragms, as illustrated in Fig. 38. Inert-gas-shielded welding techniques were used by all manufacturers at our insistence. This method produced fine results in all cases where the technique was mastered by qualified welders.

To produce transmitters that would withstand 3000 hr of service under process conditions, it was necessary to x-ray and dye-check all raw material before fabrication. Further dye-checking and x-raying of welds were employed to ensure a unit free of cracks and inclusions.

Installation Details

ORNL Specification 4998-22, covering handling and installation procedures, is included as the Appendix to this report.

UNCLASSIFIED
ORNL-LR-DWG 29230

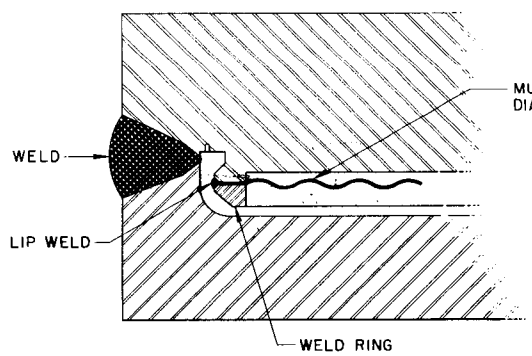

Fig. 38. Detail of Joint Weld Used in Welding Multi-Ply Diaphragms.

APPENDIX

ORNL Spec. 4998-22
May 17, 1957

Taylor High Temperature Pressure Transmitter
Handling and Installation Criteria

1. The sensor, capillary tubing, and Bourdon spring is filled with NaK. Serious fires and burns can result if this fluid is exposed to the atmosphere. Therefore, under no circumstances should the above mentioned components be cut, sharply bent, or punctured, and eye protection should be employed at all times while handling.

2. Under no circumstances should any object be inserted in the process end of the sensor which could puncture or deform the sealing diaphragm.

3. Dirt, metal chips, or foreign matter of any kind must be kept out of the process connection. Sensor should be clamped with the process connection pointing downward at least 30° from horizontal while cutting stem to proper length or while beveling as outlined on drawing Q-1722-16. *At all other times* the process connection should be capped with masking tape to exclude all foreign matter.

4. Both the pneumatic and strain gauge models contain parts which are extremely delicate. Utmost care should be taken to insure that the case and its contents da not receive a sharp blow. If either model receives a sharp blow or is dropped it should be returned for test before work is continued.

5. All transmitters shall be calibrated prior to installation by the instrument shop per standard calibration procedure, Section 18.

6. Sensors may be mounted in any position on the process piping but it is preferred they hang downward from the process piping if possible.

7. The case of the 226R (pneumatic) transmitter should be mounted on a vibration free vertical surface. The case of the 706T (strain gage) transmitter should be mounted on either a vertical surface or pipe which is completely free of vibration.

8. Pneumatic type transmitters require a 20 psi air supply that is clean and dry. No more than two instruments should be supplied from a $\frac{1}{4}''$ tubing supply line. Output pressure to receiver connection should be $\frac{1}{4}''$ tubing.

9. Strain gauge type transmitters require special readout devices. A bridge excitation of 5 volts DC is required to produce a 10 millivolt output. Unless a voltage ratio readout device is employed, the excitation voltage must be extremely well regulated and stondardized.

10. All leads between a given transmitter and its readout device must be shielded by a *common* shield. Multiconductor rubber covered shielded cable is recommended. These cables should be treated as low level leads and should not pass through A.C. fields.

11. Calrod heaters and thermocouples will be installed per ORNL drawing Q-1722-16.

12. After calrods are installed, they will be tested per ORNL Spec. Q-4998-20.

13. After calrods are tested the thermocouples will be tested per 9201-3 Instrument Calibration Procedures – Section 11.

14. After calrods and thermocouples have been tested and passed, 2″ to 3″ of Fiberfrax insulation will be installed on the front and back faces and the edges of the PMD. No insulation is required on the spiral armored capillary. After welding to the process piping, stem heaters and insulation will be required per project design specifications.

Prepared by: _____
W. R. Miller
Instrument Department

Approved by: _____
R. G. Affel
Instrument Department

INTERNAL DISTRIBUTION

1. C. E. Center
2. Biology Library
3. Health Physics Library
4-5. Central Research Library
6. Reactor Experimental Engineering Library
7-26. Laboratory Records Department
27. Laboratory Records, ORNL R.C.
28. A. M. Weinberg
29. L. B. Emlet (K-25)
30. J. P. Murray (Y-12)
31. J. A. Swartout
32. E. H. Taylor
33. E. D. Shipley
34. C. S. Harrill
35. C. P. Keim
36. J. H. Frye, Jr.
37. R. S. Livingston
38. W. H. Jordan
39. S. C. Lind
40. F. L. Culler
41. A. H. Snell
42. A. Hollaender
43. M. T. Kelley
44. K. Z. Morgan
45. T. A. Lincoln
46. A. S. Householder
47. C. E. Winters
48. D. W. Cardwell
49. J. A. Lane
50. D. Phillips
51. M. J. Skinner
52. C. J. Borkowski
53. R. R. Dickison
54-103. W. R. Miller
104. E. R. Mann
105-154. R. G. Affel
155. C. S. Walker
156. E. Vincens
157-158. C. M. Burton
159. A. M. Leppert
160-169. H. J. Metz
170. G. H. Burger
171. R. F. Hyland
172. A. L. Southern
173. J. W. Krewson
174. J. T. DeLorenzo
175-177. A. L. Boch
178. A. P. Fraas
179. H. G. MacPherson
180. A. J. Miller
181-186. H. W. Savage
187. E. J. Breeding
188-190. W. R. Osburn
191. R. K. Abele
192. R. K. Adams
193. H. E. Banta
194. A. E. G. Bates
195. E. S. Bettis
196. A. M. Billings
197. C. Brashear
198. L. H. Chase
199. H. E. Cochran
200. T. E. Cole
201. E. P. Epler
202. J. B. Frisbie
203. T. M. Gayle
204. W. J. Greter
205. J. Guarneri
206. P. W. Hill
207. G. A. Holt
208. J. L. Horton
209. B. Lieberman
210. C. S. Lisser
211. F. W. Manning
212. C. A. Mossman
213. J. F. Potts, Jr.
214. W. Ragan, Jr.
215. G. G. Stout
216. H. J. Stripling, Jr.
217. H. A. Todd
218. D. S. Toomb
219. R. E. Toucey
220. K. W. West
221. P. P. Williams
222. P. M. Reyling
223. G. C. Williams
224. ORNL – Y-12 Technical Library, Document Reference Section

EXTERNAL DISTRIBUTION

225. Division of Research and Development, AEC, ORO
226-841. Given Distribution as shown in TID-4500 (13th ed., Rev.) under Instruments Category (100 copies – OTS)