CENTRAL RESEARCH LIBRARY
DOCUMENT COLLECTION
5

MARTIN MARIETTA ENERGY SYSTEMS LIBRARIES
3 4456 0350617 8

ORNL-2492
Chemistry—General
TID-4500 (13th ed., Rev.)
February 15, 1958

ISOTOPES DIVISION ANNUAL REPORT FOR 1957

OAK RIDGE NATIONAL LABORATORY

operated by

UNION CARBIDE CORPORATION

for the

U.S. ATOMIC ENERGY COMMISSION

CENTRAL RESEARCH LIBRARY
DOCUMENT COLLECTION
LIBRARY LOAN COPY
DO NOT TRANSFER TO ANOTHER PERSON
If you wish someone else to see this document, send in name with document and the library will arrange a loan.

Printed in USA. Price 1.75 cents. Available from the

Office of Technical Services
U. S. Department of Commerce
Washington 25, D. C.

LEGAL NOTICE

This report was prepared as an account of Government sponsored work. Neither the United States, nor the Commission, nor any person acting on behalf of the Commission:

A. Makes any warranty or representation, express or implied, with respect to the accuracy, completeness, or usefulness of the information contained in this report, or that the use of any information, apparatus, method, or process disclosed in this report may not infringe privately owned rights; or

B. Assumes any liabilities with respect to the use of, or for damages resulting from the use of any information, apparatus, method, or process disclosed in this report.

As used in the above, "person acting on behalf of the Commission" includes any employee or contractor of the Commission to the extent that such employee or contractor prepares, handles or distributes, or provides access to, any information pursuant to his employment or contract with the Commission.

ORNL-2492
Chemistry–General
TID-4500 (13th ed., Rev.)
February 15, 1958

Contract No. W-7405-eng-26

ISOTOPES DIVISION ANNUAL REPORT FOR 1957

H. E. Seagren

Compiled from data by:

E. E. Beauchamp
J. H. Gillette
E. Lamb
P. S. Baker

DATE ISSUED

JUL 1 1958

OAK RIDGE NATIONAL LABORATORY
Oak Ridge, Tennessee
operated by
UNION CARBIDE NUCLEAR COMPANY
for the
U. S. ATOMIC ENERGY COMMISSION

MARTIN MARIETTA ENERGY SYSTEMS LIBRARIES

3 4456 0350617 8

CONTENTS

INTRODUCTION 1

SUMMARY 1

RADIOISOTOPE PRODUCTION 11

- Iodine-131 11
- Phosphorus-32 11
- Cobalt-60 11
- Cobalt-60 Storage Garden and Irradiator Facility 11
- Carbon-14 11
- Iridium-192 11
- Cesium-137 11
- Unit Processing 11
- Unit Preparation for Irradiation 11
- Repackaging for Shipment 11
- Radioisotope Packaging and Shipping 11
- Miscellaneous Special Products 12
- Targets for Particle Accelerators 12
- Tritium 12
- Short-Lived Fission Products 12
- Fission Product Pilot Plant 12
- Miscellaneous Operating Notes 12

RADIOISOTOPE DEVELOPMENT 13

- Product and Source Development 13
  - Phosphorus-32 Distillation Process 13
- Special Source Development 13
  - Strontium-90 Source for Bremsstrahlung and X-Ray Production 13
  - Special Phosphorus-32 Sources 13
  - Calcium-47 14
  - Manganese-54 14
  - Carrier-Free Calcium-47 14
  - Radioisotope Yield Data 14
- Short-Lived Fission Products 14
  - Equipment 14
  - Tracer Runs 14
  - Hot Runs 14
- Extraction of Rare Earths from Arco Waste 15
- Radioactive Gases 15
  - Xenon-133 15
  - Iodine-131 Scrubbing Experiment 15
  - Iodine-130 15
- Manipulator Cells 16
  - Multikilocurie Cell No. 1 16
  - Multikilocurie Cell No. 2 16

Fission Product Pilot Plant 16
Plant Construction 16
Fission-Product Solution Transfer 18
Fission Product Pilot Plant Process Studies 18
Redox Waste Test Run 18
Separation of Tc^{99}, Ce^{144}, Al, and Np 18
Separation of Rubidium Alum from Cesium Alum 20
Effect of Cs^{134} on Shielding for Cs^{137} 20
Purification of Promethium-147 20
Miscellaneous 20
Hydrogen Liquefier 20
Separation of Thorium-234 and Protactinium-234 from Uranium-238 21
Purification of Uranium from Fission Products 21
ISOTOPE SEPARATIONS 21
Calutron Operations 21
Tin, Series IJ, XAX 21
Platinum, Series IK, XBX 22
Ruthenium, Series IL, XBX 23
Iron, Series IM, XAX 23
Iridium, Series IN, XBX 24
Titanium, Series IO, XBX 25
Chromium, Series IP, XAX 25
Carbon, Series IQ, XBX 26
Erbium, Series IR, XAX 27
Selenium, Series IS, XAX 27
Chemical Operations 27
Chromium 28
Lead 28
Palladium 29
Erbium 30
Osmium 30
Radiogenic Strontium-87 30
Target Preparation and Special Services 31
Special Projects 32
Preparation of Calutron Charge Materials 32
Recovery Program 33
Heavy-Element Separations 34
Calutron Operations 34
Charge Preparation and Refinement Chemistry 35
Heavy Materials Inventory 37
Isotope Separations Development 38
270-deg Two-Pass Separator 38
M-16 Type of Ion Source Assembly 38
M-18 Type of Ion Source 39
Carbon-13 Receiver 40
Vanadium-50 Receiver 40
Bombardment-Heated Ion Source 40

Two-Filament Ion Source 40
XBX Liner Baffles 41
Evaluation of Alpha I Equipment 41
Model Magnet of Beta Track 42
Charge Evaluation 42
Temperature-Controlled Leak Valve 43
High Resolution Calutron Components 43
XAX Tank-Front Installation 43
Automatic Temperature Controls 43
XBX Heater-Supply Control 43
Monitoring Devices 43
Chemical Processes in Isotope Separation 43
XBX Alcohol Cooling System 43
Recording pH Meter 45
D-C Power Supplies 45
Carbon Tube Furnace 45
Mass Spectrometers 45

ORNL SS MATERIALS CONTROL – X-10 SITE 45

Appendix A – Prior ORNL Reports Covering Isotope Programs 46

Appendix B – Glossary 47

Appendix C – Shipments of Heavy-Element Isotopes – 1957 48

Appendix D – Papers Concerning Usage of Enriched Isotopes 51

ISOTOPES DIVISION ANNUAL REPORT FOR 1957

INTRODUCTION

The Isotopes Division at the Oak Ridge National Laboratory was organized on May 1, 1957, to consolidate into one group the development, the production, and distribution functions of the radioisotope and stable isotope programs. On July 1, 1957, the program for electromagnetically separating the isotopes of the heavy elements was added to this Division. Reports of other Oak Ridge National Laboratory Divisions covering these activities in the previous year are listed in Appendix A.

This report covers the radioisotope program for the calendar year 1957, the stable isotope program since December 1, 1956, and the heavy element separation program since March 1956.

SUMMARY

There were 14,126 radioisotope shipments made in 1957, a 4% increase over the 13,585 shipments made in 1956. The quantity of radioactivity shipped has continued to rise rapidly – from 49,383 curies in 1955 to 109,500 curies in 1956, and to 166,652 curies during 1957. The average curies per shipment for Co^{60} rose from 52 in 1955 to 571 in 1956 and to 1060 in 1957. The number of Co^{60} shipments decreased from 164 in 1956 to 140 in 1957. In 1957, Cs^{137} shipments increased 25% in number and 112% in curies over those in 1956. Details are given in Tables 1 through 4. Service irradiations in the reactors decreased from 963 in 1956 to 807 in 1957; unprocessed irradiation units decreased from 1704 in 1956 to 1658 in 1957. Gross income increased about 18%, from $2,210,033 to $2,599,284.

Radioisotope development activities included adoption of a distillation process for carrier-free P^{32} from LITR-irradiated sulfur, startup of the Short-Lived Fission Products operations, development of final product purification procedures and equipment for the Fission Product Pilot Plant, design and operation of a larger-capacity Kr^{85} purification cell, development of routine production of I^{130}, and rapid processing and shipment of short-lived processed radioisotopes.

Beneficial occupancy of the Fission Product Pilot Plant was obtained on November 1, 1957. Work continued on equipment installation and checkout plus modifications to the process for Redox-type waste.

In the stable isotope program, ten elements have been processed by electromagnetic separation

Table 1. Radioisotope Sales Distribution

	Calendar Year	
	1957	1956
Foreign	$ 225,978	$ 112,364
Project	169,709	63,065
Domestic	1,873,337	1,750,761
Cancer Program Subsidy*	214,479	238,880
Technical Cooperation Program	0	97
Local Sales to Carbide	115,746	40,841
Civilian Defense	35	4,025
	$2,599,284	$2,210,033

*Income subsidized by the AEC;does not include cash received.

Table 2. Radioisotope Sales and Income of Major Categories

	Calendar Year 1957		
	Income	Shipments	Amount (mc)
Carbon-14	$ 251,014	232	10,385
Cesium-137	169,859	159	6,075,670
Cobalt-60	1,063,340	140	148,865,551
Iodine-131	435,582	4,276	891,029
Phosphorus-32	215,924	2,550	179,207
Others	463,565	6,769	10,639,893
	$2,599,284	14,126	166,651,735

Table 3. Radioisotope Sales

HSA – High specific activity CF – Carrier free
LSA – Low specific activity E – Enriched target

	Quantity Sold (mc)	
	1957	1956
Antimony-122	0	21
Antimony-124, solution, HSA	207	151
Antimony-Be, neutron sources	130,600 (9 sources)	52,100 (9 sources)
Antimony-125, solution, CF	4	6
Argon-37, gas	36 (6 ampoules)	9 (4 ampoules)
Argon-38, gas	3 cc (decoy product from Cl^{38})	0
Arsenic-76, solution, HSA	73	28
Arsenic-77, solution, CF	32	19
Barium-131, solution, HSA	3	5
Barium-133, solution, HSA	23	13
Barium-140, solution, CF	688	982
Bismuth-210, solution, HSA	92	2
Bromine-82, solution, HSA	1,889	233
Cadmium-115, solution, HSA	9	20
Cadmium-115*m*, solution, HSA	33	38
Calcium-45, solution, LSA	835	685
Calcium-45, solution, HSA	1,818	1,298
Calcium-45, solution, E	199	133
Calcium-45, solution, CF	0	8 μc
Carbon-14, dry $BaCO_3$, HSA	10,385	9,286
Carbon-14, sheets	45	27
Cerium-141, solution, CF	88	99
Cerium-144, solution, CF	1,686	2,344
Cesium-134, solution, HSA	1,562	1,789
Cesium-137, solution, CF	245,200	78,801
Cesium-137, pelleted CsCl	5,830,470 (147 sources)	2,783,022 (46 sources)
Chlorine-36, solution, HSA	10	8.475
Chromium-51, solution, HSA	410	2,926
Chromium-51, solution, E	6,974	1,105
Cobalt-57, solution, CF	4	4
Cobalt-58, solution, CF	158	55
Cobalt-60, solution, HSA	916	1,175

Table 3 (continued)

	Quantity Sold (mc)	
	1957	1956
Cobalt-60, metal	148,865,551 (1813 pieces)	93,616,415 (7196 pieces)
Copper-64, solution, HSA	16,642	3,834
Deuterium-zirconium	2 (6 targets)	6.5 cc (5 targets)
Europium-152, -154, solution, HSA	33	76
Europium-155, solution	0	11
Fission products, solution	999	890
Gallium-72, solution, HSA	14	10
Gold-198, solution, HSA	175,654	36,091
Gold-199, solution, CF	60	29
Hafnium-181, solution, HSA	268	97
Helium-3, gas	58,018 cc (53 ampoules)	30,785 cc (49 ampoules)
Hydrogen-3, gas	5,169,910 (191 ampoules)	5,696,712 (171 ampoules)
Hydrogen-3, zirconium	110,585 (63 targets)	150,862 (112 targets)
Indium-114, solution, HSA	101	90
Iodine-129, solution	0.3 mg	10.4 mg
Iodine-131, solution, CF	891,029	735,467
Iridium-192, solution, HSA	3,222	361
Iridium-192, metal	6,186,759 (433 sources)	5,720,822 (348 sources)
Iron-55, -59, solution, HSA	79	33
Iron-55, solution, E	107	142
Iron-55, metal	4 (1 source)	4 (1 source)
Iron-59, solution, E	820	648
Krypton-85, gas, CF	1,144,823	338,935
Lanthanum-140, solution, HSA	131	411
Manganese-54, solution, CF	0	6
Mercury-197, solution, HSA	20	0
Mercury-203, solution, HSA	878	663
Molybdenum-99, solution, HSA	177	248
Neodymium-147, solution, CF	8	7
Nickel-63, solution, HSA	90	77
Niobium-95, solution, CF	56	55
Osmium-191, solution, HSA	43	2
Palladium-109, solution, HSA	190	120
Phosphorus-32, solution, HSA	177,825	164,519

Table 3 (continued)

	Quantity Sold (mc)	
	1957	1956
Phosphorus-32, solution, CF	1,382	430
Potassium-42, solution, HSA	8,333	2,757
Praseodymium-142, solution, HSA	0	12
Praseodymium-143, solution, CF	10	8
Promethium-147, solution, CF	18,765	14,156
Rhenium-186, solution, HSA	61	0
Rubidium-86, solution, HSA	1,978	2,190
Ruthenium-103, solution, CF	44	74
Ruthenium-106, solution, CF	420	330
Samarium-153, solution, HSA	136	114
Scandium-46, solution, HSA	80,350	20,498
Selenium-75, solution, E	54	0
Selenium-75, solution, HSA	279	421
Silver-110, solution, HSA	273	368
Silver-111, solution, HSA	100	31
Sodium-24, solution, HSA	2,602	1,474
Strontium-89, solution, CF	1,439	1,250
Strontium-90, solution, CF	17,755	23,097
Sulfur-35, solution (sulfate), CF	15,185	12,689
Sulfur-35, solution (sulfide), HSA	278	345
Sulfur-35, solution (elemental), HSA	1,261	788
Tantalum-182, solution, HSA	82	161
Technetium-99, solution	0	0.37
Thallium-204, solution, HSA	259	251
Tin-113, solution, HSA	29	26
Tungsten-185, solution, HSA	79	95
Tungsten-187, solution, HSA	5	35
Yttrium-90, solution, CF	279	40
Yttrium-91, solution, CF	1,068	940
Zinc-65, solution, HSA	1,454	1,036
Zinc-65, solution, CF	1	0
Zirconium-95, solution, CF	4,735	961

since November 30, 1956. The isotopes of Pt, Sn, Ru, Fe, Ir, Ti, Cr, C, and Se were separated in order to replenish the stable isotope inventory. The isotopes of erbium have been separated for the first time at ORNL. During 1957, ion currents equivalent to 1599 g were monitored in the receivers. The total monitored product of the 52 isotopes of the ten elements processed during the 13-month reporting period was 1717 g.

Table 4. Irradiations in Other Reactors

	Calendar Year	
	1957	1956
At Hanford		
Antimony metal	3	3
Beryllium nitride	38	0
Calcium carbonate	2	3
Cesium chloride	1	4
Cobalt	127	41
Iron-54	1	2
Iron oxide	2	9
Mercuric oxide	2	2
Potassium chloride	2	16
Silver nitrate	3	3
Tantalum foil	2	3
Thallium	7	1
Tin	1	2
Tungsten oxide	2	4
Zinc	2	2
At MTR		
Barium chloride	1	1
Cobalt	32	32
At SRO		
Cobalt	132	208

Chemical refinement of 96 lots of separated isotopes of 15 elements was completed, and 77 lots were placed in inventory after completion of mass analysis. Four isotopes of dysprosium, $Dy^{156,158,160,164}$, were placed in inventory for the first time.

There were 836 shipments of stable isotopes, with a total weight of 73,235 g, in 1957. Total income from stable isotopes sales and other income from loans amounted to $244,940.21 for this period. Shipments increased by 16.3% over those during 1956, and total income increased 32.5%. Tables 5 and 6 give details of stable isotope shipments.

In the heavy-element isotope program, separations were completed to give products with 92% Pu^{240}, 62% Pu^{241}, 98% U^{234}, and 98% U^{236}. The feed was the products of previous runs. AEC-approved shipments from the heavy-element inventory in 1957 totaled 109 and contained 5426 g.

Isotope separations development activities were concentrated primarily on the design and testing of new or modified components for electromagnetic separations equipment and investigations of alternative methods of isotope separations.

Table 5. Stable Isotope Shipment Distribution

	Sales		Loans		Special Orders		Lithium		Nitrogen		Total Loans*	Loans Returned**
	1957	1956	1957	1956	1957	1956	1957	1956	1957	1956		
AEC	242	156	22	75	40	37	6	5	3	2	78	27
Domestic	259	216	11	47	40	36	14	6	0	3	38	29
Foreign	170	98	27	0	10	0	2	2	0	1	27	7
Total	671	470	60	122	90	73	22	13	3	6	143	63

*Total loans under new policy.

**Total returns of new loans.

Table 6. Stable Isotope Shipments

Isotope	1957		1956	
	Number of Shipments	Quantity (mg)	Number of Shipments	Quantity (mg)
Antimony-121	5	112	2	305
-123	1	20	0	0
Barium-130	4	81	2	20
-132	2	55	1	10
-134	2	540	0	0
-135	2	50	1	20
-136	1	50	0	0
-137	1	50	0	0
-138	4	300	1	50
Boron-10	113	12,589,425	95	10,260,721
-11	12	313,338	8	132,194
Bromine-79	1	20	1	1
Cadmium-106	1	10	0	0
-108	3	59	0	0
-111	0	0	3	367
-112	2	136	1	40
-113	1	41	1	40
-114	3	330	3	100
-116	1	100	1	25
Calcium-40	3	1,200	4	225
-42	2	235	0	0
-43	3	63	1	2
-44	2	21	3	65
-46	2	3	2	40
-48	1	20	5	259
Carbon-12	1	10	1	10
-13	1	1	0	0
Cerium-136	1	20	0	0
-138	0	0	1	5
-140	4	230	1	25
-142	3	507	1	20
Chlorine-35	2	2,017	4	2,650
-37	1	100	2	75
Chromium-50	6	527	5	4,303
-52	2	110	5	28,062
-53	2	40	2	120
-54	1	10	3	2,929
Copper-63	3	30,110	6	1,360
-65	5	30,476	4	185
Dysprosium-156	2	2	0	0
-160	6	167	1	20
-161	8	682	1	2,002

Table 6 (continued)

Isotope	1957		1956	
	Number of Shipments	Quantity (mg)	Number of Shipments	Quantity (mg)
Dysprosium-162	8	687	1	2,000
-163	9	762	1	1,786
-164	5	2,264	0	0
Europium-151	13	3,790	15	3,540
-153	13	3,787	13	3,415
Gadolinium-152	5	59	5	78
-154	2	510	2	35
-155	2	1,050	3	896
-156	1	1,000	3	48
-157	3	1,051	3	1,373
-158	7	1,155	5	128
-160	5	1,440	9	264
Gallium-69	5	1,203	4	140
-71	0	0	4	280
Germanium-70	4	360	3	10,251
-72	0	0	2	15,487
-73	0	0	4	3,224
-74	4	1,830	6	34,586
-76	0	0	4	5,049
Hafnium-174	3	29	4	17
-176	4	60	1	15
-177	0	0	2	858
-178	2	35	1	20
-179	5	76	3	889
-180	7	102	4	150
Indium-113	0	0	3	742
Iridium-191	1	5	2	12
-193	1	250	1	10
Iron-54	6	525	4	2,873
-56	1	3,026	4	3,859
-57	2	2,953	2	25
-58	2	675	3	329
Lead-204	3	135	1	5
-206	1	50	4	406
-207	2	905	4	330
-208	3	236	7	1,350
Lithium-6	47	4,768,458	33	1,292,922
-7	15	4,585,329	13	58,118
Magnesium-24	2	250	5	746
-25	6	381	9	1,103
-26	0	0	5	495

Table 6 (continued)

Isotope	1957		1956	
	Number of Shipments	Quantity (mg)	Number of Shipments	Quantity (mg)
Mercury-198	5	35	0	0
-199	1	10	1	2
-200	3	45	0	0
-201	2	15	2	7
-202	8	94	6	58
-204	5	40	4	27
Molybdenum-92	4	260	1	20
-94	1	40	1	14
-95	3	2,920	1	30
-96	1	5	1	20
-97	1	10	1	10
-98	2	50	1	35
-100	0	0	3	210
Neodymium-142	9	5,300	0	0
-143	4	3,260	2	3,859
-144	7	5,200	2	200
-145	2	2,810	2	1,354
-146	5	5,075	3	290
-148	4	53	2	40
-150	7	117	3	60
Nickel-58	7	1,255	8	4,550
-60	4	190	4	8,117
-61	2	20	4	72
-62	3	100	3	2,575
-64	2	60	2	210
Nitrogen-15	7	13,843	0	0
Palladium-102	1	10	0	0
-104	0	0	1	30
-105	0	0	1	30
-106	0	0	1	30
-108	1	10	1	15
-110	4	75	1	20
Platinum-190	2	11	0	0
-192	2	12	1	3
-194	2	40	2	6,016
-195	0	0	2	25
-196	2	155	2	60
-198	1	5	1	10
Potassium-39	6	1,787	3	4,120
-40	3	19	1	2
-41	10	201	7	1,720
Rhenium-185	8	1,220	3	55
-187	2	75	2	40

Table 6 (continued)

Isotope	1957		1956	
	Number of Shipments	Quantity (mg)	Number of Shipments	Quantity (mg)
Rubidium-85	2	200	4	5,708
-87	12	265	6	3,864
Ruthenium-96	4	36	0	0
-98	1	12	1	3
-99	3	126	1	9
-100	2	81	1	9
-101	3	116	1	9
-102	4	30	2	215
-104	3	41	3	54
Samarium-144	10	585	1	150
-147	4	1,180	3	285
-148	4	1,180	0	0
-149	3	1,060	4	1,495
-150	1	1,000	6	285
-152	4	1,150	4	550
-154	14	2,407	5	294
Selenium-74	2	14	2	110
-76	1	56	0	0
-77	2	110	2	60
-78	1	100	0	0
-80	2	200	1	55
-82	2	310	2	80
Silicon-28	1	40	5	5,310
-29	6	559	1	30
-30	3	30	0	0
Silver-107	2	100	2	830
-109	4	2,200	3	1,050
Strontium-84	6	151	2	12
-86	10	765	4	2,826
-87	1	1,000	4	1,790
-88	3	210	3	4,016
Sulfur-32	1	50	3	220
-33	2	8	3	45
-34	5	135	1	6
Tellurium-120	1	1	0	0
-122	1	100	1	4
-123	1	100	0	0
-124	2	115	0	0
-125	4	300	2	3,200
-126	4	430	1	50
-128	2	115	0	0
-130	2	300	3	1,050

Table 6 (continued)

Isotope	1957		1956	
	Number of Shipments	Quantity (mg)	Number of Shipments	Quantity (mg)
Thallium-203	6	1,007	0	0
-205	5	1,014	0	0
Tin-112	3	17	1	3
-114	1	5	0	0
-115	1	5	1	508
-116	4	165	3	1,714
-117	2	165	2	1,080
-118	2	120	4	1,790
-119	2	170	0	0
-120	4	234	5	837
-122	1	20	1	150
-124	1	25	1	150
Titanium-46	2	90	5	4,763
-47	1	25	2	5,576
-48	2	1,050	5	53,655
-49	2	2,912	1	4,178
-50	1	20	4	4,085
Tungsten-180	2	13	3	18
-182	5	499	2	8,500
-183	3	2,079	3	3,546
-184	4	530	4	186
-186	4	650	6	7,185
Vanadium-50	1	2	1	100
-51	0	0	1	100
Zinc-64	2	328	6	351
-66	1	31	3	4,993
-67	0	0	4	135
-68	2	151	4	2,917
-70	1	25	3	103
Zirconium-90	8	4,783	2	10,046
-91	2	150	2	3,040
-92	0	0	2	4,722
-94	0	0	2	4,313
-96	2	22	3	122

RADIOISOTOPE PRODUCTION

Iodine-131

Iodine-131 continued to lead the radioisotope distribution program in the number of shipments. While the number of shipments dropped from 4620 in 1956 to 4376 in 1957, the total I^{131} activity shipped increased by 21.2% from 735,467 mc in 1956 to 891,029.3 mc this year.

Some process difficulties were encountered because of a leak of an organic contaminant (the coolant from a condenser in the refrigeration system) into the process stream. The use of water as the coolant solved the problem temporarily. The equipment was being repaired at the end of the year.

Phosphorus-32

The number of shipments of P^{32} increased from 2445 in 1956 to 2545 in 1957. The P^{32} activity increased 8.6% from 164,950 mc in 1956 to 179,206 mc in 1957.

The presently operated P^{32} ion exchange–precipitation process was supplemented in the latter part of this year with a different process. In this process, specially purified sulfur was bombarded in the LITR and the sulfur was distilled away from the P^{32}. As soon as the equipment for this process is completely designed and the ORR goes into routine operation, a permanent facility will be constructed to replace the present process.

Cobalt-60

The shipment of 148,866 curies of Co^{60} represents an increase of 46% over that of last year.

Approximately 177,400 curies of Co^{60} were received, assayed, and stored as stock material. At the end of the year there were several thousand curies of Co^{60} on hand to be opened, assayed, and stored as stock material.

Cobalt-60 Storage Garden and Irradiator Facility

The gamma irradiator was in use for 219 days or approximately 60% of the year. The average gamma flux in the exposure cage was approximately 2.0×10^6 r/hr.

Carbon-14

A total of 7893 mc of C^{14} was produced during the year. This production, coupled with the inventory on hand from the previous year, was sufficient to maintain a constant 2-curie inventory throughout the year. The production runs during the year were studied in order to design a system for more efficient production. A modified version of the present system will be installed in 1958.

Iridium-192

The shipment of 6187 curies of Ir^{192} represents an increase of 9% over that of last year.

A total of 148 iridium units was prepared for irradiation. Seventy-six of these units were prepared from "cold" iridium and 72 were recanned decayed iridium sources.

Cesium-137

One hundred forty-seven Cs^{137} sources were shipped, representing 5830 curies of Cs^{137}. These sources ranged in activity from 5 to 200 curies of Cs^{137}. A total of 163 Cs^{137} sources was fabricated during the year, representing 6397 curies of Cs^{137}. The largest of these sources contained 260 curies of Cs^{137}.

Unit Processing

The processing of 611 irradiated units to provide product batches represents a 35% increase over last year.

Unit Preparation for Irradiation

Three thousand two hundred eleven units were prepared for irradiation. This represents an increase of 18% over last year.

Repackaging for Shipment

One hundred seventy-nine irradiated units were repackaged for shipment. These were for the most part LITR service irradiations which require opening and repackaging so that the customer will be relieved of cutting open the weld-sealed LITR can.

Radioisotope Packaging and Shipping

Packaging and shipping of radioisotopes during 1957 are shown below:

Containers Loaded	Number	Per Cent
Customer	209	1.62
Nonreturnable	10,449	81.79
Returnable	2,129	16.59
	12,787	100.00

Miscellaneous Special Products

Thirty-seven special sources for project customers were prepared during the year. The preparation of these sources varied in complexity from simple drying and sealing of the material in Pyrex or quartz to complex arrangements of aluminum sandwiches.

The following radioisotopes were used in these sources: Tl^{204}, P^{32}, I^{131}, Cs^{137}, Sr^{90}, Fe^{55}, Ru^{106}, Hg^{203}, Sn^{113}, Ce^{141}, Zn^{65}, Hg^{205}, and Os^{191}.

Targets for Particle Accelerators

A new evaporator was installed for use in addition to the smaller machine purchased several years ago. Targets of all elements are now being fabricated.

Targets for use as primary standards for nuclear cross-section determinations have focused attention on absolute thickness determinations. An interferometer which is being fabricated will be used in addition to direct weighing for thickness determinations. Targets are now rotated during preparation to ensure uniform thickness.

The number of tritium-zirconium targets decreased from 114 produced in 1956 to 69 produced in 1957; however, the number of other targets increased from 6 in 1956 to 43 in 1957.

Tritium

A total of 5174.9 curies of tritium was packaged in 191 containers, representing a 78% increase in quantity of H^3, but only 12% in the number of containers.

Short-Lived Fission Products

The short-lived fission-products unit operated on an experimental basis during the year. However, the following products were produced:

Material	Number of Products	Amount (mc)
$Ba\text{-}La^{140}$	8	4,034
Ce^{141}	1	632
Gross FP	4	4,890
$Nd\text{-}Pm^{147}$	1	927
Pr^{143}	1	206
Ru^{103}	5	492
Sr^{89}	7	2,983
Y^{91}	1	3,413
$Zr\text{-}Nb^{95}$	7	17,147
Nb^{95}	2	171
Y^{90}	10	2,118

The gross fission products, Ce^{141}, $Nd\text{-}Pm^{147}$, Pr^{143}, Ru^{103}, Y^{91}, and $Zr\text{-}Nb^{95}$ were processed from new equipment, and the Sr^{89} and $Ba\text{-}La^{140}$ production represents the combined production from the new unit and manipulator cell processing.

Additional information is included in the Radioisotope Development section of this report.

Fission Product Pilot Plant

ORNL received beneficial occupancy of the Fission Product Pilot Plant (F3P) on November 1, 1957, and the Radioisotope Production Department assumed responsibility for the building.

ORNL forces installed the office, lunchroom, and locker-room equipment and had completed 95% of the manipulator cell equipment installation by January 1, 1958. Safety railings, fences, and chain systems were erected in hazardous areas, and the main power supply to the building was rerouted to allow access by motor crane to critical areas.

All building and some process equipment was tested for operation, and modifications or repairs were made to the instrument air system, distilled water system, heating and ventilating system, Lapp Pulsafeeder pumps, and the analytical cell valves.

The F3P personnel calibrated the makeup tanks, initiated a routine maintenance system, established an equipment file and spare parts list, and participated in a manipulator cell training program. The testing of the centrifuges, process jets, and one shielded transfer tank was also accomplished by January 1, 1958.

The instrument calibration and checkout by the Instrumentation and Controls Division was 75% completed at the end of the year.

Miscellaneous Operating Notes

Argonne Cell. – The low-level cell was out of service for approximately five weeks, during which

time a stainless steel liner was installed and all electrical and laboratory services were replaced and rearranged.

Multikilocurie Cell. – The multikilocurie cell was assigned to the final purification of Cs^{137} and to the fabrication of Cs^{137} sources for 11 weeks during the year. During this period approximately 8500 curies of $Cs^{137}Cl$ was purified.

During the month of October, the viewing window of the multikilocurie cell was removed, cleaned, and reassembled. A leak was found at a weld in the oil filler pipe, and it is believed that moisture had entered the window unit at this point. Moisture is thought to be partially responsible for the cloudiness of the mineral oil. No trouble has been encountered since this repair was made.

The cell was used for Co^{60} work for approximately 38 weeks and was out of service for maintenance for approximately three weeks.

Cobalt-60 Storage Garden. – Some trouble has been encountered in the operation of the Co^{60} storage vault because of the corrosion of the aluminum storage cans. This corrosion is thought to be due to water leakage into the storage tubes. The joints between the vault and the adjacent concrete slabs have been caulked, and a French drain has been installed alongside the vault shelter in order to reduce the problem of water leakage.

A new type of storage can made of stainless steel has been designed, and the aluminum cans will be replaced during regular operations. All aluminum cans will have been removed during approximately six months of operating time.

RADIOISOTOPE DEVELOPMENT

PRODUCT AND SOURCE DEVELOPMENT

Phosphorus-32 Distillation Process

The development work and the design criteria have been completed on the distillation method for the preparation of carrier-free P^{32}.

The experimental quartz equipment has been used to supplement the normal P^{32} production on a routine basis. These supplemental runs demonstrated the need for equipment which is fabricated from metal because of the breakage of the quartz still during the remote assembly and disassembly of the apparatus.

The production distillation apparatus will be made of platinum- or gold-lined stainless steel. The sulfur, which is to be distilled from the phosphorus activity, is contained in a gold cup which is inserted into the bottom of the still. The opening in the still is closed by a water-cooled O-ring seal. The still is heated electrically. A flow of nitrogen prevents the sulfur from reaching the O-ring seal and eliminates refluxing of sulfur. The condensed sulfur is collected in a glass flask which is provided with a nitrogen-shielded ball joint maintained at 125°C. The sulfur-collecting vessel is removed periodically for disposal.

During the year, experience indicated that sulfur could not be irradiated in quartz containers in the LITR without breakage of the quartz ampoules. Re-usable platinum-lined irradiation containers were designed and are being fabricated.

SPECIAL SOURCE DEVELOPMENT

Strontium-90 Source for Bremsstrahlung and X-ray Production

An $Sr^{90}SO_4$-$BaSO_4$ mixture was prepared for M. Brucer of ORINS to determine the feasibility of producing an x-ray source suitable for radiation treatment in which limited penetration of tissue is required.

It was desired that the principal component of radiation emitted from the source be the characteristic x ray (0.035 Mev) of barium due to excitation by the beta particles. The molar ratio of barium to strontium was adjusted to 2.25 in an effort to achieve the maximum yield of barium x rays.

The source pellet, 4 mm dia × 3.5 mm long, was made by compressing the precipitated sulfates at a pressure of 200,000 psi. The pellet, which weighed 177 mg, was doubly encapsulated in welded stainless steel capsules.

Special Phosphorus-32 Sources

Two sources containing carrier-free P^{32} were prepared for the Biology Division by sandwiching the source material between two pieces of polyethylene plastic. One of the sources contained 1000 mc and the other 100 mc. The P^{32} was distributed as a layer 0.001 in. thick and 20 mm in diameter on the surface of aluminum disks of 30 mm dia.

Calcium-47

Calculations indicate that Ca^{47} can be produced in the LITR at the rate of 3 mc per milligram of Ca^{46}. With the use of a Ca^{46} enrichment of 9.5%, the specific activity would be 0.28 mc/mg. These calculations are based upon three weeks of irradiation, a cross section of 0.25 barn for Ca^{46}, a neutron flux of 3.6×10^{13}, and a half life of 4.9 days for Ca^{47}.

An experiment was made in order to determine the true yield by irradiating 2 mg of $CaCO_3$ which contained 0.046 mg of Ca^{46}. The yield was 0.225 mc of Ca^{47} having a specific activity of 4.88 mc/mg.

Manganese-54

Investigations indicate that carrier-free Mn^{54}, $[Fe^{54}(n,p)Mn^{54}]$, can be produced during routine production of Fe^{55}, $[Fe^{54}(n,\gamma)Fe^{55}]$, in the LITR. The yield from 69 mg of Fe^{54} irradiated for a period of 369 days (4.63×10^{20} *nvt*) was 1.87 mc of Mn^{54}. Manganese-54 distributed by ORNL as an irradiated target material has been produced at a rather high cost in the cyclotron.

Carrier-Free Calcium-47

The production of carrier-free Ca^{47} by the (n,α) reaction of titanium was investigated, but the results were negative.

Radioisotope Yield Data

The yields of radioisotopes in standard irradiated units were calculated for neutron fluxes of 5×10^{11}, 10^{14}, and 10^{15} in order to revise yield data in terms of the latest cross-section measurements and to extend the data to yields expected from neutron fluxes available in the ORR and possible future reactors.

SHORT-LIVED FISSION PRODUCTS

Equipment

Installation of the short-lived fission-products processing equipment in Building 3028 was completed. Some leaks that occurred during the first tracer runs were repaired. The only major repair necessary in the stainless steel system was a readjustment of all the agitators which had developed serious vibration. The interface probes had to be reworked several times to overcome a tendency to creep inside the sleeve and to make contact with the vessel. The stainless steel equipment was easily decontaminated and offered no real difficulties in operation.

Because of changes in the proposed process the glassware equipment proved to be inadequate for final processing. A new system was designed, and installation will begin early in 1958. The ruthenium and zirconium processing equipment worked well and will be retained, but decontamination of the glass equipment is very difficult.

Tracer Runs

Two tracer runs using depleted uranium were done, and CCl_4 was used as the carrier solvent. Although extraction of the uranium and rare earths was efficient, the presence of large amounts of corrosion products was noted. It was decided to eliminate CCl_4 as the solvent.

Hot Runs

Eight hot runs were made. It was found that the proposed operating volume of 30 liters of $UO_2(NO_3)_2 \cdot 6H_2O$ (UNH) solution provided radiation levels too great for the shielding. A working volume of 15 liters was adopted.

Several methods of extraction were tried. Carbon tetrachloride was eliminated because of chloride formation and resulting increased corrosion. Pure tributyl phosphate (TBP) was unsatisfactory since its use led to phase inversion and emulsification, and large amounts of organic material remained in the final fraction. As no heavy solvent having the desired properties was found, Amsco-125 was adopted as the carrier solvent. A 2:1 solution of Amsco-125 and TBP worked satisfactorily, although the process had to be changed in order to operate with the less dense organic layer.

Extraction of the rare earths from 12 *N* HNO_3 was completely unsuccessful in the hot runs.

In all cases, more than 99% of the uranium was extracted by five passes of TBP–Amsco-125 from UNH solutions which had been adjusted to 6 *N* in HNO_3. The fission-product solution was then reduced in volume to 1 liter and transferred to the glass equipment for processing. Serious difficulties were encountered at this point. Upon dilution, large amounts of a precipitate formed. This precipitate did not carry the activity nor the corrosion products; it was composed of some uranium compounds. Since the final fraction

represents a 150:1 reduction in volume of the starting solution, the uranium content (even with 99.9% extraction efficiency) becomes appreciable.

The following process is proposed for overcoming the difficulties discussed above:

1. extraction of the uranium from UNH with five cycles of TBP in Amsco-125,
2. reduction of the fission-product solution to 1 liter at 6 *N* in HNO_3,
3. extraction in glassware with three passes of TBP in CCl_4, followed by washing with CCl_4,
4. precipitation of the rare earths as oxalates with lanthanum carrier and separation by ion exchange,
5. treatment of the alkaline-earth fraction to remove corrosion products and separation by ion exchange.

EXTRACTION OF RARE EARTHS FROM ARCO WASTE

Adaptation of the extraction equipment in the Short-Lived Fission Products facility to the extraction of rare earths from Arco waste was proposed. Information obtained from small-scale runs in glassware indicates that an efficiency of about 70% could be expected. The waste, without prior treatment, is contacted with 100% TBP. After five batches of waste have been equilibrated, the accumulated rare earths and cerium are stripped from the TBP with 0.1 *N* HNO_3. The cerium can be removed almost quantitatively by oxidation and precipitation as the iodate; then the remaining fraction is separated by ion exchange. When the feed material becomes available, early in 1958, this process will be used to separate Pm^{147}.

RADIOACTIVE GASES

Xenon-133

The experimental equipment previously used for the separation of Xe^{133} from the I^{131} process off-gas was found to be inadequate because of the difficulty of shielding the short-lived Xe^{135}. The equipment was redesigned to allow chemical drying of the off-gas and complete processing in a lead-shielded cubicle.

Iodine-131 Scrubbing Experiment

An analysis of the maximum credible accident due to a malfunction of the ORR has indicated the necessity of scrubbing fission-produced radioactive iodine from the air before disposal in order to prevent harmful exposure to persons in the surrounding area.[1] The scrubber system to be used is a packed tower of ceramic Berl saddles with air flow countercurrent to a descending stream of recirculated caustic solution. A decontamination factor of 10^3 for the iodine is considered adequate for safe discharge of the gas.

An experimental packed tower was constructed in order to check the efficiency of the scrubber proposed for the ORR installation. Appropriate scale-down factors were incorporated in order to simulate the conditions to be encountered. Iodine, traced with I^{131}, was generated chemically and introduced into an air sweep through the packed tower. Direct sampling of the air at the inlet and exit sides of the packed tower permitted the iodine concentration in the air to be determined by radioassay.

Decontamination factors were measured over a wide range of conditions, with air flow rates, caustic flow rates, and depth of ceramic packing used as variables. It was concluded that the scrubber system for the ORR would be adequate to achieve the 10^3 decontamination factor desired.

Iodine-130

An experiment was made in order to determine the yield of 12.6-hr I^{130} produced by irradiation of fission-product I^{129} in the ORNL Graphite Reactor.[2]

A 0.4-mg sample of elemental iodine (51.3% I^{129}) was irradiated for seven days in a neutron flux of 8.5×10^{11}. The total I^{130} produced was 4.25 mc having a specific activity of 10.6 mc/mg.

The product solution was studied by means of gamma-ray spectrometry, beta- and gamma-decay counting, 4π beta-gamma coincidence counting, beta-gamma coincidence counting, and gamma-gamma coincidence counting. The decay scheme and gamma intensities were found to be essentially the same as those reported by Caird and Mitchell.[3]

---

[1] F. T. Binford and T. H. J. Burnett, *A Method for the Disposal of Volatile Fission Products from an Accident in the ORNL Research Reactor*, ORNL-2086 (Aug. 2, 1956).

[2] H. T. Russell, *Recovery and Half-Life Determination of I^{129}*, ORNL-2293 (May 7, 1957).

[3] R. S. Caird and A. C. G. Mitchell, *Phys. Rev.* **94**, 412 (1954).

No contamination was observed. The half life of 12.6 hr was confirmed.

Iodine-130 is now available on a routine basis and will be added to the radioisotope catalog.

The gamma-ray energies and intensities of I^{130} are as follows:

Energy (Mev)	Intensity (%)
0.422	28
0.538	100
0.668	100
0.731	84
1.14	16

MANIPULATOR CELLS

Multikilocurie Cell No. 1

A request to provide facilities for loading HRT core-tank corrosion samples resulted in the decision to modify the multikilocurie cell. The largest sample holder to be loaded has a 9-in.-dia flange and is approximately 9 ft long.

Two 10-in.-dia holes were drilled in the walls of the multikilocurie cell. The holes were lined with stainless steel sleeves which were welded to the cell liner.

Multikilocurie Cell No. 2

The site preparation for a new multikilocurie cell on the east side of Building 3029 is 80% complete.

FISSION PRODUCT PILOT PLANT

Plant Construction

All phases of construction and equipment installation included in the original design of the Fission Product Pilot Plant (F3P) were completed. This included the completion of the small amount of work remaining to be done on the building and cell block construction, the installation of vessels, instrumentation and piping in the cell blocks and tank farm, and the installation of viewing windows and manipulators in the final processing cells. Figure 1 shows the chemical processing cell of the F3P.

The equipment testing program revealed that several defects in the system require repairs or alterations. The centrifuges failed to meet specifications by having plastic parts in the flexible couplings, defective shaft bearing seals, improperly designed lubrication systems, and excessive vibration in one unit. The vendor has remedied most of the deficiencies, and work is in progress to complete the centrifuge installation as specified. All piping connections to the centrifuges, originally included in the equipment installation phase of the project, are being deferred until the completion of the testing program. Other defects in the system are the installation of improperly sized sampler return lines in the recirculating samplers due to a design error, a faulty instrument air drier, improperly installed valve switches on the instrument panel board, and flow-restricting sharp bends on the outlet side of several jets in the tank farm area.

Improvements in process chemistry allowed the deletion of the ion exchange column, feed tank, evaporator, and pump in the Cs^{137} process section from the original design.

Several design changes in equipment and piping were necessitated when it was found that the principal feed material to the plant will be Redox waste rather than Purex waste. Construction drawings detailing the required changes were completed, and installation is scheduled to begin during January 1958.

The design of specialized final processing and sampling equipment, withheld from the original project design to await the development of design criteria, proceeded during the year. The individual projects and their status are listed below:

Project	Completion (%)
W-19 and W-20 Transfer Station	100
Tank Farm Sampler	98
Analytical Cell Equipment	90
Cell 15 Transfer Station	60
Cs^{137} Product Purification Equipment	75
Source Assembly Equipment	15
Glass-Lined Tank Installation	65
Ce^{144} Product Purification Equipment	0
Sr^{90} Product Purification Equipment	0
Ru^{106} Product Purification Equipment	0
Tc^{99} Product Purification Equipment	0

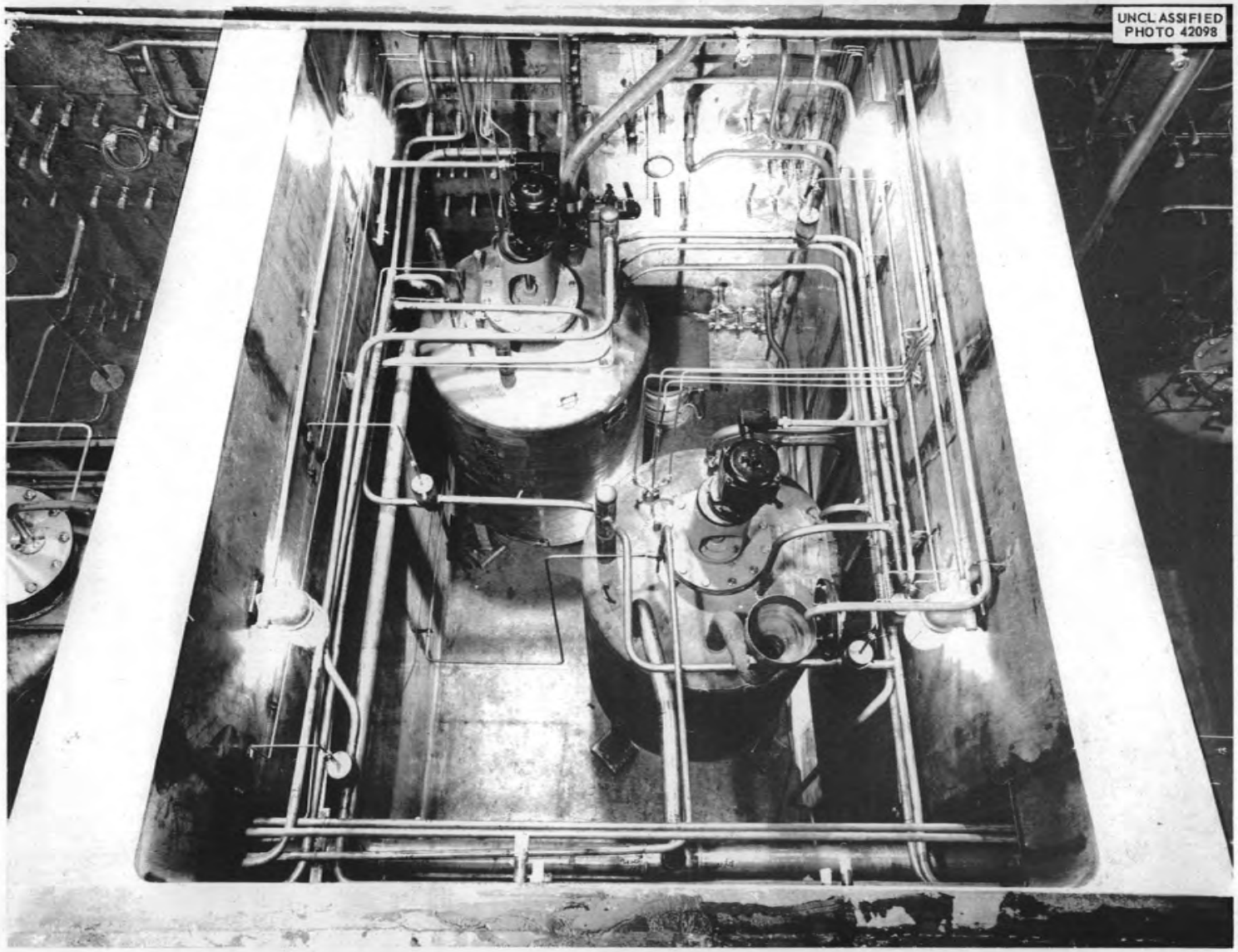

Fig. 1. Fission Product Pilot Plant. Chemical processing cell.

Fission-Product Solution Transfer

Design of the Model II Shielded Transfer Tank, capable of transporting 500 gal of Idaho Chemical Processing Plant (ICPP) Redox waste, was completed. One tank was completed and was used to make a successful transfer of fission-product waste from Idaho Falls to ORNL. The fabrication of five other tanks of the same design is 80% complete.

During the filling of the Model I Shielded Transfer Tank at the ICPP, it was discovered that a leak had developed in the filling line, permitting entry of solution into the lead-filled space between the inner tank and the outer jacket. Radiation readings up to 3 r/hr were detected. The container was emptied and will be returned for repairs. It is strongly suspected that the leak was caused by a weld failure. No contamination occurred outside the tank.

Special precautions were taken with the design of the Model II Shielded Transfer Tank in order to ensure that the solution does not contact a welded line during the filling or emptying operation. A threaded opening was installed through the outer jacket, inside the cupola, so that the inner tank and lines may be pressure-tested before each shipment is made.

An experiment was conducted in order to determine the behavior of synthetic ICPP fission-product solution at low temperatures. At −27°F the solution became mushy, but quickly returned to a clear solution when the temperature was raised. The possibility of a container being damaged by freezing is very remote.

The rate of gas formation from Savannah River Operations acidic fission-product waste was measured at 10 and 40°C to allow estimates of pressures which will be developed in closed tanks during shipment. The rate of gas formation was determined by measuring the gas pressure developed in a pyrex glass assembly which was immersed in a constant-temperature water bath. The average rate of gas formation at 10°C was 1.0 cc/hr per gal of waste, and at 40°C was 3.1 cc/hr per gal of waste solution containing fission products aged approximately 200 days since discharge from a reactor.

Shielding requirements for Savannah River fission-product waste were also determined by using 350 ml of the actual waste.

FISSION PRODUCT PILOT PLANT PROCESS STUDIES

Redox Waste Test Run

The primary chemical separation steps proposed for the processing of Redox-type waste solutions in the F3P were investigated by using actual Redox waste solution. The macroconstituents of the solution were $Al(NO_3)_3$, NH_4NO_3, and $Hg(NO_3)_2$. Cesium-137 was separated from the mixture by adding sulfate as Na_2SO_4 to form cesium-ammonium alum crystals. Mercury(II) was removed by reduction with hydrazine in order to precipitate it as Hg_2SO_4. The alkaline earths and rare earths were recovered by precipitation from a strongly basic carbonate solution in which the aluminum was converted to soluble $NaAlO_2$. Final decontamination of the basic waste solution was done by cation exchange columns of IRC-50 and IR-100 resins, connected in series. Analyses were made in order to determine the efficiency of each operation. The data confirmed the results of numerous tracer level experiments on simulated Redox waste solutions and showed the proposed process chemistry to be adequate for initial operations in the F3P.

Separation of Tc^{99}, Ce^{144}, Al, and Np

Tracer work on the F3P process chemistry was continued. The main developments are summarized below.

Technetium. – It was found that technetium can be reduced with 0.09 *M* N_2H_4 in 2.0 *N* $NaNO_3$ and can be carried on a small amount of iron precipitated at pH 3.0 with gaseous NH_3. This step can be used in recovering and concentrating technetium from both Purex and Redox wastes in good yield and with good separation from other fission products. By omitting the N_2H_4 reduction, ruthenium carries well on iron under the same conditions and technetium does not. Thus, a good separation of technetium from ruthenium can be effected at a later step in the processing.

It was found that technetium extracts from 1.4 *M* $Al(NO_3)_3$ into 100% TBP with a yield of 92.9%. Technetium can be stripped from the 100% TBP with 10 *N* HNO_3.

Cerium. – The most suitable primary recovery process for cerium is to precipitate $Ce(OH)_3$ with other rare-earth hydroxides on a small amount of

carrier, such as $Fe(OH)_3$. Gross amounts of iron or other heavy metal cations that precipitate as hydroxides must be removed by prior processing. A rare-earth oxalate precipitation from weak-acid solution separates the rare earths from iron and other impurities.

Three precipitants, pyrophosphate, molybdate, and arsenate, have been evaluated as to their use for separating cerium from rare earths. Good separation is possible by all three methods, but each method has certain advantages over the others, which are summarized below. All the methods depend on the oxidation of cerium to the ceric state.

Cerium Pyrophosphate. – The precipitate is of fairly definite composition and is compact. Excess pyrophosphate complexes Ce^{4+}, but this complexing action can be controlled. Since the separation is run in 0.8 to 1.0 *N* HNO_3, persulfate cannot be used as an oxidizing agent. The use of $KMnO_4$ as an oxidizing agent introduces manganese into the solution, and it must be removed by an oxalate precipitation of cerium. The metathesis of pyrophosphate is somewhat incomplete.

Cerium Molybdate. – Ceric molybdate can be precipitated from a neutral or an acid-deficient solution. Thus, this method can be used to recover Ce^{4+} from neutralized Redox wastes. Under these conditions, $Na_2S_2O_8$ is a suitable oxidizing agent which does not introduce any heavy metal cations into the solution. The precipitate is coarse and crystalline. Ceric molybdate is readily metathesized by weak caustic to $Ce(OH)_4$. The solution must be buffered in order to maintain the weak acidity required for this precipitation. Molybdate in excess has no complexing action on cerium.

Cerium Arsenate. – Ceric arsenate can be precipitated from 0.2 *N* HNO_3 solution. Persulfate can be used as an oxidizing agent. Arsenate is readily metathesized by weak caustic. Excess arsenate does not complex Ce^{4+}. The composition of the precipitate is not definite. Ceric arsenate precipitates from strong acid solution also, but an oxidizing agent other than persulfate must be used. The type and size of the precipitate are acceptable under processing conditions likely to be encountered in the F3P.

To summarize, three precipitants – pyrophosphate, molybdate, and arsenate – can be used to separate Ce^{4+} from other rare earths. Precipitation as the oxalate is used to separate cerium and other rare earths from heavy metal cations, such as iron and manganese. A precipitation of $Ce(OH)_4$ from 1.0 *N* NaOH can be used to metathesize undesirable anions such as arsenate, molybdate, oxalate, or pyrophosphate.

Aluminum. – The addition of an acidic ammonium salt, such as NH_4NO_3, to a caustic aluminate solution brings about a slow neutralization of the excess caustic and precipitates $Al(OH)_3$ in compact form. By heating the solution, NH_4OH is driven off as NH_3 and H_2O, bringing about complete precipitation of $Al(OH)_3$. Hydrolysis with an acidic ammonium salt in an aluminate solution gives an $Al(OH)_3$ precipitate that is more compact than that obtained either by bubbling CO_2 into an aluminate solution or by acidifying the aluminate solution and bubbling in gaseous NH_3.

Neptunium. – Over 99% of the neptunium in 1.4 *M* $Al(NO_3)_3$ extracts into 100% TBP (volume ratio of organic to aqueous is 1:1), if the neptunium is oxidized to a higher valence state (VI) with 0.1 *M* $NaBrO_3$. If no oxidizing agent is used, only 10 to 15% of the neptunium extracts under similar conditions. In the presence of 0.1 *M* H_2O_2, practically no neptunium is extracted by 100% TBP. Thus, most of the neptunium in Redox waste seems to be present as Np(V), which is not extractable by 100% TBP. With stainless steel equipment, $Na_2S_2O_8$ can be used as the oxidizing agent.

The fate of neptunium was traced through the Redox flowsheet by using neptunium tracer. It was found that 35% of the neptunium carries on the basic mercurous precipitate formed in 0.09 *M* N_2H_4. If the solution is heated in order to carry the reduction further to mercury metal, the neptunium all goes into the filtrate. Thus, although Np(IV) carries well from acid solution on an insoluble precipitate such as LaF_3, mercury metal does not act as a carrier and the neptunium remains unprecipitated. The reduced Np(IV) all precipitates on the hydroxide precipitate in weak caustic in the next processing step. Apparently carbonate complexes uranyl ion and neptunium(V), but does not complex Np(IV); so Np(IV) carries well as the hydroxide.

Separation of Rubidium Alum from Cesium Alum

A preliminary investigation of solubilities of a rubidium and cesium alum system in water indicated that a separation of rubidium alum from cesium alum can be made with low cesium losses. Solubility ratios

$$\left(\frac{\text{grams of Rb alum per liter}}{\text{grams of Cs alum per liter}}\right)$$

as high as 80 were found with appropriate adjustments of the ammonium alum concentration. The data were extrapolated to Cs^{137} processing conditions expected from the operation of the F3P and indicated that a complete separation of rubidium from cesium can be made with a cesium loss of 0.3% or less.

The separation of rubidium from cesium by fractional crystallization was tested during the final purification of 9750 curies of Cs^{137}. The rubidium content was reduced from 15 wt % to 1.4 wt % in the product. The recovery of Cs^{137} was 90% over the entire final purification procedure, which included the precipitation of Cs_2PtCl_6, the reduction of the chloroplatinate with N_2H_4 to platinum metal and $Cs^{137}Cl$, fuming of the $Cs^{137}Cl$ to remove contaminating ammonium ions, drying, and powdering.

Effect of Cs^{134} on Shielding for Cs^{137}

The attenuation of Cs^{134} gamma emissions by lead was measured by using a 2.83-curie source of Cs^{134} and interposing varying thicknesses of lead between the source and a cutie-pie and Victoreen instrument. From the results of the shielding experiment it can be estimated that the radiation from a 1000-curie source of Cs^{137} containing 5% Cs^{134} through 4.5 in. of lead will be 2.0 milliroentgens per hour at 1 meter (mrhm) from the Cs^{137} gammas and 6.0 mrhm from the Cs^{134} gammas. An additional 0.8 in. of lead must be added to reduce the radiation from both isotopes to 2.0 mrhm.

Purification of Promethium-147

An extensive investigation was made during this year on several phases of the chemical process for purifying Pm^{147}. Promethium is separated from other rare earths by ion exchange and organic eluants. At a temperature higher than 30°C, rare earths are separated from each other with less overlapping of the peaks of activity. Several eluants were investigated by means of equilibrium and elution studies in an an effort to find one which would produce efficient separations at room temperature.

It appears that glycolates, lactates, and alpha hydroxyisobutyrates are superior to citrates for separating the adjacent rare earths which are associated with Pm^{147}.

It was determined by elution studies that better separation of neodymium from promethium would result if the inactive neodymium could be detected during the operation of the ion exchange column. Neodymium-147 tracer was added in order to follow the inactive neodymium. The result was that the promethium product contained less neodymium than previously.

Promethium-147 from the cation exchange columns contains Am^{241}. During this year a process was developed and used to purify promethium from americium. The process was one of complexing both elements in 5.0 to 6.0 *M* NH_4SCN and separating them by anion exchange on the basis of the difference between the strengths of their complexes. Americium and promethium are adsorbed on Dowex-1 resin from 5.0 to 6.0 *M* NH_4SCN solution, and promethium is removed from the column by continued elution with the same solution. Promethium is easily recovered from the eluate by precipitation of $Pm(OH)_3$.

In general, the chemical process has been investigated quite thoroughly, with the result that better promethium products are produced and that conditions are now established for the design of equipment which will increase the production of promethium.

MISCELLANEOUS

Hydrogen Liquefier

The Isotopes Division was assigned the responsibility for the design, installation, and operation of a hydrogen liquefaction plant with a minimum production capacity of 5 liters/hr. A survey was made of the commercially available types of hydrogen liquefiers to determine the type of liquefier most suitable for service at ORNL with regard to safety, operability, maintenance, and cost.

Interested parties at ORNL, the National Bureau of Standards Cryogenics Laboratory, and the University of Chicago were consulted concerning the proposed plant. On the basis of these discussions it was decided that a compressor-type liquefier should be installed.

Separation of Thorium-234 and Protactinium-234 from Uranium-238

Thorium-234 and Pa^{234} were separated from uranium oxide which had been depleted in U^{235}. Depleted material was chosen in order to reduce the amount of Th^{231} and Pa^{231} which would be in the final product.

The procedure may be summarized in this manner:

1. Adsorb Th^{234} and Pa^{234} on Nalcite HCR resin from less than 0.5 *N* HCl solution and allow UO_2Cl_2 to go through the column.
2. Remove thorium and protactinium from the ion exchange column with 5% $H_2C_2O_4$.
3. Purify the product from iron and chromium by thenoyltrifluoracetone (TTA) extraction.

Purification of Uranium from Fission Products

Ferron (7-iodo-8-hydroxy-quinoline-5-sulphonic acid) forms water-soluble complexes with UO_2^{++} ion, rare earths, and strontium. At pH 5.0 to 6.0 it is possible to adsorb onto cationic resin the rare earths and strontium and to allow the complexed UO_2^{++} to go through the column. Continued elution of the column with Ferron solution removed the activities from the column.

It was concluded from further studies that this organic compound would have better use in recovering small amounts of enriched uranium from radioactive solutions rather than in recovering large quantities of normal uranium from solutions.

ISOTOPE SEPARATIONS

This portion of the report covers the progress of the stable isotope program since November 1956[4] and of the heavy-element separations program since March 1956.[5] Included are the developments in calutron operations and chemical operations, both for stable isotopes and for heavy elements, as well as the accomplishments of the isotope separations development group during these periods.

CALUTRON OPERATIONS

Since the last reporting period, November 30, 1956, ten elements have been processed in the stable isotope program; two (Pt and Sn) were reported as "in progress" in the previous report; two (C and Se) are now in progress.

The isotopes of Pt, Sn, Ru, Fe, Ir, Ti, Cr, C, and Se were separated in order to replenish the stable isotope inventory.

The isotopes of erbium have been separated for the first time at ORNL. Material in the mass-172 position was collected in order to investigate the possible existence of Er^{172}.

During the calendar year 1957, ion currents equivalent to 1599 g were monitored in the receivers. The total monitored product of the 52 isotopes of the ten elements processed during the 13-month reporting period was 1717 g.

The tank front (high-voltage barrier) for the XAX tank was rebuilt during June and July 1957. At the same time, scheduled maintenance of the cooling tower and other building utilities was performed. The total tank time involved amounted to 1300 hr.

Tin, Series IJ, XAX[6]

This separation was started on October 24, 1956. Stannic chloride charge was fed from a flask external to the vacuum system into an M-12 ion source. The ion source was equipped with an arc chamber having a cross section $\frac{5}{16} \times \frac{1}{2}$ in., 0-deg ion exit-slit $\frac{3}{16} \times 4$ in., standard 0-deg electrodes, and a 170-mil tantalum filament. Ions were collected in purified graphite pockets, each placed behind a 0.125-in. defining slot. The separation between adjacent ion beams was 0.416 in. per mass unit.

Operation was characterized by an uneven charge-vapor flow through the leak valve and by erosion of the copper tube which fed the $SnCl_4$ into the arc region.

---

[4] *Stable Isotopes Semiann. Prog. Rep. Nov. 30, 1956*, ORNL-2236.

[5] *Electronuclear Research Semiann. Prog. Rep. March 20, 1956*, ORNL-2140.

[6] The suffix XBX or XAX indicates that separation was performed in equipment having a 24-in. or 48-in. collection radius, respectively.

The separation consisted of 105 individual runs. Ions were produced and collected during 2811 of the 3690 tank hours involved. The peak ion current monitored was 28.0 ma; the average was 18.2 ma. Charge was consumed at the rate of 1.16 g of elemental tin per hour. Process efficiency was 6.9% (see Glossary, Appendix B).

Table 7 gives the data for the tin isotope separation. Ion currents equivalent to the indicated amounts of each isotope were monitored in the receiver.

Platinum, Series IK, XBX

This second collection of platinum isotopes was started on October 28, 1956. Metallic platinum was used as charge material, being generated in the bombardment-heated ion source.[7] This source differs from the conventional M-12 in that the charge container and arc chamber consist of a single block, $\frac{3}{4} \times 1 \times 6$ in. The charge is contained in a $\frac{5}{16}$-in.-dia by 5-in.-long cavity provided in the back of the block. Adjacent to the charge cavity and connected to it by a $\frac{3}{32} \times 5$-in. slit is an arc-chamber cavity, $\frac{3}{8} \times 5\frac{1}{2}$ in. This graphite block, supported and suitably shielded by graphite, is heated by electron bombardment.

Operation was characterized by sparking in the electrode region. Some stabilization in output was accomplished by modifying the control grid and by increasing the cross-sectional area of the heated graphite block from $\frac{3}{4} \times 1$ in. to $1 \times 1\frac{1}{4}$ in. Holes in the modified control grid placed the points of electron impact farther away from the charge cavity and produced a more even distribution of heat.

Ions were collected in purified graphite pockets positioned behind $\frac{1}{8}$-in. beam-defining slots. The separation between adjacent beams (0.130 in.) was so small that certain masses could not be collected simultaneously. One receiver collected masses 190, 192, 195, and 198 (41.7% of the total weight), while the other receiver collected masses 190, 194, and 196 (58.2% of the total weight).

[7] W. A. Bell, Jr., L. O. Love, and C. E. Normand, *A 2800°C Calutron Ion Source Unit and Its Use in Separating the Isotopes of Pd, Pt, Ru, and Ir*, ORNL-1767 (July 30, 1954).

Table 7. Tin Run Data

Tin Isotope	Normal Abundance (%)	Monitored Product (g)	Enriched Abundance (%) (not completed)	Enhancement*
112	0.95	1.67		
114	0.65	1.39		
115	0.34	1.64	29.4	122.0
116	14.24	29.45	92.8	77.6
117	7.57	17.02	85.4	71.4
118	24.01	53.73		
119	8.58	19.89	85.9	64.9
120	32.97	77.41	97.9	94.8
122	4.71	10.51	88.3	152.7
124	5.98	14.19	96.0	377.7
		227.00		

*See Glossary in Appendix for explanation of term.

The series consisted of 145 individual runs. Ions were received during 1438 of the 2465 tank hours involved in the collection. A peak ion current of 25.5 ma was achieved. The average ion current received was 3.79 ma. If it is assumed that each charge installed was used completely, charge consumption rate was 0.7 g of platinum per hour, with the efficiency of the process being about 4%.

The platinum isotope separation data are given in Table 8. Ion currents equivalent to the indicated amounts of each isotope were monitored in the receivers.

Ruthenium, Series IL, XBX

This second collection of ruthenium isotopes was started on December 20, 1956. The separated material was used for inventory replenishment. Metallic ruthenium charge was vaporized in the bombardment-heated ion source as described in "Platinum, Series IK, XBX" of this report.

Ions were collected in purified graphite pockets, each positioned behind a $\frac{1}{8}$-in. beam-defining slot. Beam separation of 0.255 in. per mass unit required that certain masses be rejected by each receiver. One receiver collected masses 96, 98, 100, 102, and 104, rejecting masses 99 and 101; the other receiver collected all except mass 100.

The separation consisted of 192 runs during which ions were produced for 1958 of the 3230 tank hours involved. A peak ion output of 19.8 ma was achieved; the average ion output maintained was 2.5 ma. Charge consumption was determined by assuming that each run was terminated because of charge exhaustion. On this basis, charge was consumed at a rate equal to or less than 0.6 g/hr, and the process efficiency was about 1.6%.

Ion currents equivalent to the following amounts of each isotope were monitored in the receiver; data on the enriched abundance and enhancement are not yet complete.

Ruthenium Isotope	Normal Abundance (%)	Monitored Product (g)
96	5.47	1.03
98	1.84	0.53
99	12.77	1.52
100	12.56	1.45
101	17.10	2.05
102	31.70	7.58
104	18.56	4.19
		18.35

Iron, Series IM, XAX

The separation of iron was started January 10, 1957, in order to produce a quantity of Fe^{58} for use in the preparation of Fe^{59} by neutron irradiation. Purity requirements allowed this separation to be made with the Alpha-56 two-arc ion source. This source has two charge containers, each

Table 8. Platinum Run Data

Platinum Isotope	Normal Abundance (%)	Monitored Product (g)	Enriched Abundance (%) (not completed)	Enhancement
190	0.012	0.51	0.40	33.6
192	0.78	1.03	11.6	16.7
194	32.8	14.67		
195	33.7	12.69	53.4	2.2
196	25.4	8.25		
198	7.23	2.51		
		39.66		

having a capacity of 2 kg. Vapor flow from the charge is maintained by controlled heating of the charge container with resistance-type graphite heaters. The arc region associated with each charge is 14 in. long, and the ions produced therein are emitted through an ion exit slit $\frac{1}{4} \times 13$ in. The two exit slits are separated by a distance of 12 in. The source also incorporates the use of a filament-changing device which permits renewal of worn filaments when necessary. The ability to change filaments increased ion reception time for iron to a maximum of 253 hr and to an average of 137 hr. In comparison, average reception time achieved in the Fe, Series GU, run in XBX where no filament changing facilities were available, was 53 hr.

The series consisted of 18 runs, with ions being received during 2881 of the 4101 tank hours involved in the separation. The peak ion current received was 148 ma; the average was 84.3 ma. Charge was consumed at the rate of 5.4 g of iron per hour, with process efficiency being 3.1%.

The iron isotope separation data are given in Table 9. Ion currents equivalent to the indicated amounts of each isotope were monitored in the receiver.

Iridium, Series IN, XBX

This separation was started February 25, 1957, in order to replenish the inventory of iridium isotopes. Iridium charge was vaporized at approximately 2800°C in the bombardment-heated ion source previously described in "Platinum, Series IK, XBX" of this report. The extreme temperature required to vaporize the charge also vaporized certain graphite calutron components. Steady operating conditions were not obtainable. Output fluctuated rapidly with variation in bombardment-heater current. Slight increases in heater current produced excessive graphite vapor pressure, resulting in sparking in the electrode region; decreases resulted in loss of practically all output.

Ions were collected in purified graphite pockets positioned behind $\frac{1}{8}$-in. beam-defining slots. Separation between the two ion beams was 0.263 in.

During the series, 101 runs were started; 37 runs were nonproductive. The average ion-reception time during productive runs was 15.7 hr. Charge consumption rate of elemental iridium was 0.3 g/hr, with a process efficiency of 0.9%.

Ion currents equivalent to the following amounts of each isotope were monitored in the receiver; data on the enriched abundance and enhancement are not yet complete.

Iridium Isotope	Normal Abundance (%)	Monitored Product (g)
191	37.3	1.07
193	62.7	1.82
		2.89

Table 9. Iron Run Data

Iron Isotope	Normal Abundance (%)	Monitored Product (g)	Enriched Abundance (%) (not completed)	Enhancement
54	5.84	12.87	93.8	244.0
56	91.68	465.0		
57	2.17	7.09	78.0	160.0
58	0.31	1.18	53.1	365.0
		486.14		

Titanium, Series IO, XBX

This separation was started on April 4 and continued until August 2, 1957. Ions were produced in an M-12 type of source using a shallow channel arc chamber, ¼-in. 0-deg ion-exit, standard 0-deg electrodes, and a 170-mil tantalum filament of the straight type.

Titanium tetrachloride charge was fed into the arc region from a flask supported outside the vacuum system. Flow rate of the charge initially was controlled by a conventional type of leak valve; later, a bellows-type valve with short seating-surface was substituted. Precautions were taken to minimize the contamination of the charge by moisture. Titanium tetrachloride hydrolyzes, forming a white solid which plugs the leak valve. The ion beam produced was restricted in the 90-deg position to an angular divergence of +11 to −4 deg, inclusive.

The separated material was collected in graphite pockets. The pockets receiving Ti^{47} and Ti^{49} were placed in contact with the beam-defining faceplate in order to effect a certain degree of receiver shielding. Erosion or sputtering of the graphite pockets by intense ion beams was so severe that 36 separate pockets were required in this separation.

During the series, 146 runs were started; 4 were nonproductive. Ions were received during 4184 of the 5426 tank hours involved. The peak ion output achieved was 61 ma, with the average being 32.5 ma. The decrease in average ion output during this series, compared with that of previous collections, is the result of difficulty encountered in controlling the vapor flow from a new supply of $TiCl_4$ charge material. Average charge consumption rate was 0.57 g/hr, with a process efficiency of 10.3%.

Table 10 gives the isotope separation data. Ion currents equivalent to the indicated amounts of each isotope were monitored in the receiver.

Chromium, Series IP, XAX

This separation of chromium was started April 25, 1957, to place approximately 10 g of Cr^{54} into inventory. Ions were produced in the two-arc Alpha-56 type of source described in the section "Iron, Series IM, XAX" of this report. This source was modified in order to reduce the ion exit slit length to 7 in. Thus, ions were withdrawn simultaneously from two ion exit slits, ¼ × 7 in., separated by a distance of 12 in. Charge material, $CrCl_3$, was pressed into cakes to avoid loss of material from the container during evacuation of the tank.

The separated ions were collected in graphite pockets of the size normally used with beta equipment. These pockets were positioned in an Alpha-II receiver subassembly, and shielding was provided between adjacent pockets. Ion entry into pockets receiving masses 50, 53, and 54 was through 0.125-in. slots; entry into the Cr^{52} pocket was through a 0.187-in. slot. Throughout the separation the arc was supported by nitrogen; filaments required changing at approximately 30-hr intervals, and troublesome deposits of tantalum formed on the collimating slot to produce filament-to-source shorts.

Table 10. Titanium Run Data

Titanium Isotope	Normal Abundance (%)	Monitored Product (g)	Enriched Abundance (%) (not completed)	Enhancement
46	7.95	15.55	86.1	71.7
47	7.75	19.38	82.7	56.8
48	73.45	185.5		
49	5.51	13.95		
50	5.34	11.85	83.2	87.8
		246.23		

The series consisted of 36 runs producing ions during 3777 of the 5385 tank hours involved. Peak ion current monitored was 155 ma; the average for the series was 78.0 ma. Charge was consumed at the rate of 3.2 g/hr, with a process efficiency of 4.7%.

The isotope separation data are given in Table 11. Ion currents equivalent to the indicated amounts of each isotope were monitored in the receiver.

Carbon, Series IQ, XBX

This separation was started on August 2, 1957, to produce a 1-g sample of C^{13} enriched in isotopic purity from 1.1% to 90%. The usual operating techniques and equipment were modified to accomplish this degree of enrichment.

The conventional M-12 ion source was equipped with a channel ($\frac{5}{16} \times \frac{1}{2}$ in.) arc chamber having a collimating slot and filament at each end. The ion exit slit was $\frac{1}{8} \times 6\frac{1}{2}$ in. and had a 0-deg angle face; standard 0-deg electrodes were used. To minimize product contamination, a liquid nitrogen trap was placed between the calutron components and the diffusion pumps; turbulence within the vacuum chamber was minimized by evacuating the tank slowly during pumpdown periods. A two-filament ion source was used to essentially double the ion reception time per evacuation cycle. The arc was fed by the CO_2 charge, and nitrogen was used as the support gas. Ions were collected in deoxidized copper pockets positioned behind two beam-defining faceplates. The C^{13} ion beam was defined by a $\frac{1}{8}$-in. slot, whereas the C^{12} was allowed to pass through a $\frac{1}{2}$-in. slot. Angular divergence of the received beam was limited to 8 deg (+6 to −2 deg, inclusive) in order to ensure adequate beam focus to produce 90% C^{13}. The series is still in process.

To date, 129 runs have been started, and ion reception has been achieved during 5641 of the 6935 tank hours involved. Maximum ion output has been limited to 60.0 ma in the interest of attaining a high product purity. Average ion output throughout the series has been 40.1 ma. When CO_2 is used as the charge feed, no attempt is made to determine charge consumption rate on each individual run. Data derived during three or four representative runs indicate a charge consumption rate of 0.24 g of carbon per hour, with a process efficiency of 9.3%.

Ion currents equivalent to the following amounts of each isotope were monitored in the receiver; data on the enriched abundance and enhancement are not yet complete.

Carbon Isotope	Normal Abundance (%)	Monitored Product (g)
12	98.89	103.0
13	1.11	0.84
		103.84

Table 11. Chromium Run Data

Chromium Isotope	Normal Abundance (%)	Monitored Product (g)	Enriched Abundance (%) (not completed)	Enhancement
50	4.31	15.28	90.4	209.0
52	83.76	504.9		
53	9.55	39.75	95.3	192.0
54	2.38	12.32	90.6	395.0
		572.25		

Erbium, Series IR, XAX

This first calutron separation of erbium was started on September 5, 1957. Erbium trichloride was used as charge in the conventional M-14 ion source and in the M-16 source discussed in the Isotope Separations Development section of this report. Each source was equipped with a 0-deg ion exit slit, $\frac{3}{16} \times 5$ in., and standard 0-deg electrodes. The ions were received in graphite collector pockets. Provision was made to collect mass 172, the collected material to be used in order to investigate the possible existence of Er^{172}. Rare-earth contaminants in the charge produced side-band beams which heated the receiver faceplate and created the impression that beam focus was extremely poor. Such conditions enhanced the possibility of mismonitoring the ion beams during early stages of the run.

Sixty-seven runs were completed during the series. Ion reception was achieved during 2506 of the 3683 tank hours involved. Peak ion output was 31.4 ma in comparison with an average output of 7.5 ma. The charge consumption rate was 1.0 g/hr with a process efficiency of 4.6%.

Ion currents equivalent to the following amounts of each isotope were monitored in the receiver; data on the enriched abundance and enhancement are not yet complete.

Erbium Isotope	Normal Abundance (%)	Monitored Product (g)
162	0.136	0.70
164	1.56	4.85
166	33.41	45.18
167	22.94	26.77
168	27.07	28.65
170	14.88	10.97
"172"		0.58
		117.70

Selenium, Series IS, XAX

This separation was started on November 21, 1957, and is still in process. Selenium dioxide charge, operating at 150 to 200°C, is ionized in a low-temperature M-12 source. This source is equipped with a standard arc chamber: $\frac{3}{16} \times 6$ in., 0-deg stainless steel ion exit slit, standard 0-deg stainless steel electrodes, and a 170-mil tantalum filament. Retention of selenium by copper pockets in previous separations has been sufficiently low that aluminum pockets containing aluminum turnings are now being used in all mass positions except 78 and 80. These two isotopes are collected in water-cooled copper pockets containing aluminum turnings. A beam having a total angular divergence of 24 deg is passed by the 90-deg baffle.

Selenium operation is characterized by a general hazy tank condition accompanied by severe sparking in the electrode region. Ionization efficiency is low, and charge material condenses on cool portions of the ion source. Ion exit slits erode severely on the upper (toward the receiver) edge. Such erosion produces defocusing effects and must eventually lower product purity. Exhaust gases from the system must be scrubbed.

To date, 31 runs have been completed. Ions have been received during 1346 of the 1928 tank hours involved in the collection. Peak ion output monitored has been 14.1 ma in comparison with an average of 7.3 ma. Charge consumption rate is 1.7 g/hr, with process efficiency being 1.3%.

Ion currents equivalent to the following amounts of each isotope have been monitored in the receiver; data on the enriched abundance and enhancement are not yet complete.

Selenium Isotope	Normal Abundance (%)	Monitored Product (g)
74	0.87	0.13
76	9.02	1.98
77	7.58	1.83
78	23.52	6.49
80	49.82	15.96
82	9.19	2.69
		29.08

CHEMICAL OPERATIONS

Chemical refinement of 96 lots of 15 elements was completed. The mass analysis has been completed on 77 of these lots, and they have been placed in inventory. The normal backlog of unrefined isotope lots was materially reduced during

the reporting period by (1) obtaining preliminary rough mass analyses on homogeneized isotopic material from collector pockets, thereby allowing combinations of pockets which otherwise would be processed individually and by (2) storing, either in the pockets or in an unrefined form, the unmarketable isotope(s) of certain elements, especially those which are already stocked abundantly in the inventory. Thus far, Fe^{56}, Cr^{52}, and Ti^{48} have been handled in this manner.

The refinement chemistry program included work with isotopes of the following 20 elements, some of which were samples reprocessed after being returned by loanees: B, Ba, Cl, Cr, Cu, Dy, Er, Eu, Fe, La, Li, Pb, Pd, Pt, Rb, Re, Sn, Ti, Tl, and Zn. Placed in inventory for the first time were four isotopes of dysprosium, $Dy^{156,158,160,164}$.

The refinement procedures that follow are those which are either new or have been markedly changed during the reporting period. Erbium (run for the first time) is included, although refinement has been completed on only four of the eight lots.

Chromium

Chromium isotopes were collected on purified graphite receivers and were recovered by ignition of the pockets in oxygen at 800°C. The resulting ash was boiled with 70% $HClO_4$ until the green mass of Cr_2O_3 was converted to orange-red crystals of CrO_3. These crystals, which are completely insoluble in cool $HClO_4$, were filtered on sintered glass by means of suction. The compound was dissolved through the filter with hot water, leaving behind insoluble impurities, such as silica. The filtrate was then made very slightly ammoniacal and after digestion was filtered through sintered glass.

The alkaline filtrate was acidified with H_2SO_4 and the Cr(VI) was reduced to Cr(III) with $(NH_2OH)_2 \cdot H_2SO_4$. After the solution was heated to near boiling and NH_4OH was added until $Cr(OH)_3$ precipitation just commenced, the solution was brought to a boil and $(NH_2)_2CO$ was added until precipitation was complete. The dense, blue-green precipitate was allowed to settle and then was filtered on paper, dried, and ignited to Cr_2O_3 at 1000°C. Table 12 shows the refinement data for these isotopes.

Lead

Lead isotopes were collected in water-cooled copper pockets. The isotopic lead was leached from the receiver with hot 6 *M* HNO_3, and, after dilution of the leach solution, lead and copper were electrolyzed simultaneously, with lead collecting as PbO_2 at the platinum anode. This deposit was dissolved in dilute HNO_3 containing H_2O_2, and the resulting solution was evaporated and then concentrated to 84% HNO_3 by adding fuming HNO_3. The dense white crystals of $Pb(NO_3)_2$ were allowed to settle, and then were filtered on sintered glass, using suction, and washed with 84% HNO_3.

After the crystals were dissolved in hot water, saturated $(NH_4)_2CO_3$ was used to precipitate the lead as $PbCO_3$. The insoluble carbonate was centrifuged, washed with aqueous $(NH_4)_2CO_3$,

Table 12. Chemical Refinement Data – Chromium

Isotope	Lot Number	Weight of Cr_2O_3 (g)	Normal Abundance (%)	Enriched Abundance (%)	Impurities Found (%)*							
					Ag	Al	Ca	Mg	Na	Pb	Si	Ti
50	IP 1033(a)	12.536	4.31	90.4	T	<0.05T	0.05		<0.01T			
52**	IP 1034(a)		83.76									
53	IP 1035(a)	34.504	9.55	95.3	T		0.05	<0.05FT		0.1	0.05	<0.02T
54	IP 1036(a)	8.430	2.38	90.6	T		0.05			0.2	<0.05T	<0.02T

*T indicates trace; FT, faint trace.

**This lot was retained as unrefined oxide.

dried, and ignited to PbO at 650°C. The refinement data for the lead isotopes are shown in Table 13.

Palladium

Palladium isotopes were collected on purified graphite and were recovered by ignition of the pockets in oxygen at 650°C. Since the PdO from the ignition is quite insoluble in all acids (even aqua regia), the resulting ash was boiled with HCOOH in order to reduce the PdO to metallic palladium. The excess HCOOH was evaporated away, and the residue was subsequently dissolved in dilute aqua regia. The solution was then evaporated to near dryness several times with concentrated HCl in order to remove the nitrate, and the residue was finally diluted to give a solution 0.25 *N* in HCl. Sufficient 1% alcoholic dimethylglyoxime was added to the acidic solution to precipitate all the palladium as palladium dimethylglyoximate. The orange-yellow precipitate was filtered on paper with gentle suction and was washed well with hot water containing a small quantity of the reagent. The paper and contents were dried for several hours in an electric drying oven and finally ignited very carefully to 650°C. The manner in which the precipitate is ignited is very critical inasmuch as the compound is somewhat volatile. The ash resulting from the ignition was treated with HCOOH to obtain palladium metal. Refinement data for these isotopes are summarized in Table 14.

Table 13. Chemical Refinement Data – Lead

Isotope	Lot Number	Weight of PbO (g)	Natural Abundance (%)	Enriched Abundance (%)	Impurities Found (%)						
					Ag	Ca	Cu	K	Mg	Na	Si
204	HZ 969(a)	1.675	1.5	39.1		0.05		0.01	0.05T	0.01	0.05T
206	HZ 970(a)	12.692	23.6	80.4		0.02	0.02FT				
207	HZ 971(a)	1.557	22.6	71.5		0.03	0.02T				
207	HZ 971(b)	12.514		63.6		0.03					
208	HZ 972(a)	20.510	52.3	96.0	T	0.02					

Table 14. Chemical Refinement Data – Palladium

Isotope	Lot Number	Weight of Pd (g)	Natural Abundance (%)	Enriched Abundance (%)	Impurities Found (%)										
					Ag	Al	Ca	Cu	Fe	K	Mg	Na	Pt	Si	Ti
102	IH 991(a)	0.193	0.96	50.9				0.02	0.03	0.02	0.02	0.03	0.2	0.1	
104	IH 992(a)	0.888	10.97	78.3			0.02		<0.02T						
		0.208		59.9	0.01		0.05	0.1			<0.02T	0.01		0.05	
105	IH 993(a)	1.675	22.23	74.0				0.01							<0.02T
	IH 993(fp)	0.182		62.5	<0.01FT		0.05	<0.02T	<0.02T				<0.04T	0.1	
106	IH 994(a)	1.617	27.33	75.5			0.01	<0.02FT	<0.02FT		<0.02FT		<0.02T		<0.02FT
	IH 994(b)	0.367		76.7			0.02	<0.02T	<0.02T				<0.04T	0.05T	
	IH 994(fp)	0.632		51.8	0.02		0.04	<0.02FT	<0.02T		<0.02T	0.01		0.05	
108	IH 995(a)	3.541	26.71	94.7			0.03	0.02							<0.02T
	IH 995(fp)	0.530		86.1	0.02T		0.05	<0.02FT	<0.02FT		0.02T	0.01	<0.02FT		0.02
110	IH 996(a)	1.270	11.81	87.5	0.01		0.02	0.02	<0.02T					0.05	0.02
	IH 996(fp)	0.207		79.5	0.05	<0.05T	0.02	0.02	<0.02T		0.05	<0.01T	0.4	0.2	0.03

Erbium

Erbium isotopes were collected on purified graphite and were recovered by ignition of the pockets at 750°C in a large Vycor tube in an atmosphere of oxygen. The impure oxide resulting from the ignition was dissolved in dilute HNO_3, and the solution was diluted and filtered. The filtrate was made distinctly alkaline with NH_4OH, and the resulting pink $Er(OH)_3$ was filtered on sintered glass. The hydroxide was dissolved and washed through the funnel with concentrated ammonium citrate.

The filtrate was then adjusted to pH 10 with NH_4OH and was saturated with H_2S. The mixed sulfides were collected on paper, and the resulting filtrate was adjusted to pH 3–4 with HCl. Free sulfur and any sulfides which formed upon acidification were coagulated by boiling and were filtered out of the solution. Erbium was removed from the filtrate by the addition of hot, saturated $H_2C_2O_4$ solution. The oxalate was ignited to Er_2O_3 at 700°C.

Erbium was further refined by dissolving the oxide in dilute HNO_3, precipitating the hydroxide with NH_4OH, redissolving in HNO_3, and reprecipitating $Er_2(C_2O_4)_3$ with $H_2C_2O_4$. A very dense, easily handled oxide can be obtained by igniting this oxalate at 1000°C for 4 hr after it has been thoroughly washed on the paper with acetone and then air-dried. At this point, samples containing prohibitive amounts of rare-earth impurities were dissolved in dilute acid and purified by elution from Dowex 50 cation exchange resin with buffered citric acid. Erbium was recovered after elution by precipitation with $H_2C_2O_4$, followed by a four-hour ignition at 1000°C.

The "ghost" material which was collected at the mass-172 position during the erbium collection has been chemically recovered, homogeneized, and analyzed spectrochemically. It was found to contain approximately 2000 ppm of ytterbium. Inasmuch as ytterbium is known to have an isotope at mass-172, it is being removed by ion exchange techniques before an analysis is made in order to determine the possible natural existence of Er^{172}.

Osmium

The chemistry of osmium was studied in order to develop a satisfactory procedure for the handling of the element in a calutron separation. The two phases studied were (1) the preparation and stability of possible charge materials and (2) combinations of analytical procedures which would give a safe and quantitative recovery of the isotopes.

Two compounds of osmium might be used to provide ions in the calutron – the tetroxide and the tetrachloride. Neither of these is completely satisfactory, however, since they are both somewhat unstable in the presence of reducing materials. Osmium tetrachloride is preferred over the tetroxide because the latter is extremely toxic in its vaporous state.

Osmium tetrachloride can be prepared at a rather slow rate by direct combination of the elements at 450°C. Elevated temperatures do not improve the process, but rather seem to decompose the product. The tetrachloride can be quantitatively sublimed at 300–450°C from porcelain, Pyrex, quartz, or gold but only incompletely from graphite such as is used in the calutron. Since the only way that a charge material can be evaluated completely is during an actual separation, a trial run must be carried out in order to complete these investigations.

Preliminary work on the chemistry of separation and recovery of the isotopes suggests the following procedure: Ignition of the graphite pockets in oxygen and collection of the resulting volatile OsO_4 in 1:1 HBr; addition of NH_4Br, and crystallization and separation of the ammonium bromosmate, $(NH_4)_2OsBr_6$. The product obtained in this way is stable, weighable, and quantitatively recoverable.

Radiogenic Strontium-87

Several grams of lepidolite, a silicate ore which is quite old geologically and rich in alkali metals (especially rubidium), was processed in order to concentrate a small quantity of radiogenic Sr^{87}. The ore contains 200–330 ppm of strontium which is predominantly Sr^{87}.

The procedure used to obtain a sample for mass analysis included hydrofluorination of the ore at 300–350°C, metathesis of the resulting fluorides by fusion with Na_2CO_3, leaching and concentrating the strontium with fuming HNO_3, precipitation of $SrCO_3$ with Na_2CO_3, and finally igniting in platinum at 800°C.

The mass spectrometric data indicate that the strontium is at least 90% Sr^{87}, whereas the best

calutron-produced Sr^{87} to date has been only 73% pure. Approximately 2 kg of the ore has been hydrofluorinated and is being extracted in order to place an estimated 400-mg sample of high-purity Sr^{87} in inventory.

Target Preparation and Special Services

The requests for special isotopic forms and for elemental targets of various shapes have increased. Conversions of inventory forms may be categorized into three general groups:

1. conversion of one compound to another,
2. conversion of a compound, usually oxide, to the metal,
3. conversion of the elemental form to a compound.

Table 15 shows examples of each type of conversion.

Two very large targets of enriched lithium, one of Li^6 and one of Li^7, were prepared for Brookhaven National Laboratory by encapsulating metallic lithium in stainless steel cylinders, 6 in. high and 11 in. in diameter.

Targets of $Cd^{111,112,113,114,116}$, $Zn^{62,68}$, $Ag^{107,109}$, $Pd^{105,106,108,110}$, $Sb^{121,123}$, $Cr^{53,54}$, $Ga^{69,71}$, $Ge^{73,74}$, and Fe^{54} were prepared by electroplating the elements from appropriate solution on 1-in. platinum disks for (p,n) studies in the ORNL High Voltage Laboratory.

Targets of Mg^{24} and Mg^{25} were prepared from the enriched oxides as follows: MgO was intimately mixed with an excess of aluminum powder and pelleted at 7.5 tons/in.^{2}. The pellet was broken up, placed in an Inconel boat, and heated

Table 15. Conversions of Inventory Forms

Different Compound	Reduction of Compound to Element*	Reduction Method	Element to Compound
$Rb^{85}Cl$ to $Rb^{87}F$	CuO to Cu	H_2 or electrolytic	B^{10} to $B_2^{10}O_3$
$Rb^{87}Cl$ to $Rb^{87}F$	NiO to Ni	H_2 or electrolytic	B^{10} to $H_3B^{10}O_3$
$K^{39}Cl$ to $K^{39}F$	PbO to Pb	H_2 or carbon	Li^6 to $Li_2^6SO_4$
$K^{41}Cl$ to $K^{41}F$	Fe_2O_3 to Fe	H_2 or electrolytic	Li^6 to $Li_2^6SO_4$
$K^{41}Cl$ to $K^{41}I$	CdO to Cd	Electrolytic	Li^6 to Li^6F
$NaCl^{35}$ to $AgCl^{35}$	ZnO to Zn	Electrolytic	Li^7 to Li^7F
$NaCl^{35}$ to $BaCl_2^{35}$	TiO_2 to Ti	Calcium or potassium	Ru^{104} to $(NH_4)_2Ru^{104}Cl_6$
NH_4Br^{79} to $AgBr^{79}$	LiCl to Li	Barium	
$Li_2^7CO_3$ to $Li_2^7SO_4$	$CaF_2 \cdot BF_3$ to B	Potassium	
	MgO to Mg	Aluminum or calcium	
	CrO_3 to Cr	Electrolytic	
	Ga_2O_3 to Ga	Electrolytic	
	GeO_2 to Ge	H_2 or electrolytic	
	H_3BO_3 to B	Potassium	
	WO_3 to W	Hydrogen	
	SnO_2 to Sn	Hydrogen	

*In each of these cases, more than one isotopic species was involved.

to 950–1000°C in a vacuum chamber. The vaporized magnesium was deposited in thin sheets on suitable metallic targets with as little as 0.05% of aluminum as an impurity.

Targets of $Rb^{87}F$, $K^{39}F$, and $K^{41}F$ were encapsulated in silver containers for ORNL cross-section measurements.

Special targets were fabricated from $Fe_2^{56}O_3$ and $Zr^{90}O_2$ by pelleting in a ½-in. die at 4 tsi. Point sources of Gd^{152} and of Sm^{144} were prepared. These consisted of approximately 1- and 10-mg samples of the oxide in tiny quartz spheres.

Considerable time was spent on the fabrication of Cr^{54} and normal calcium cyclotron targets for the preparation of Mn^{54} and Ca^{47}, respectively. In the case of the electrolytic deposition of Cr^{54}, there was considerable difficulty in obtaining a thick plate, probably because of the presence of trace amounts of chloride ion which, upon being oxidized to Cl_2 at the lead anode, attacked it. The dissolved lead then precipitated the chromium as lead chromate and/or dichromate. The chloride impurity apparently resulted from reduction of the $HClO_4$ which was used to prepare the CrO_3 for the plating bath.

The operation of the bath is extremely sensitive to chloride ion concentration, especially since the chromium concentration must necessarily be low because of the limited availability of the isotope in inventory. A modification of the CrO_3 recovery procedure involved washing the CrO_3 with fuming HNO_3 to remove any residual $HClO_4$. Although a little chromium was lost into the filtrate, the bath was improved so that chromium could be plated successfully.

A new method was developed for converting the boron complex, $CaF_2 \cdot BF_3$, to elemental boron. The complex was decomposed by heating to 250°C in a Pyrex tube and the resulting BF_3 passed over KF contained in a series of nickel boats in the cool part of the tube. During the decomposition a small quantity of liquid was usually formed in the reaction tube. The liquid was poured into a platinum dish, and KF was added until there was no further evidence of reaction. The contents of the boats were then added to the platinum dish and the paste was neutralized with KOH. The insoluble salt (KBF_4) was centrifuged out, washed with water and then with alcohol, and dried. Elemental boron was prepared by reducing the dry KBF_4 with potassium metal, in an argon atmosphere. Potassium salts were removed by leaching with dilute HCl.

A plating method was devised in order to produce ductile zinc (or cadmium), thereby facilitating the fabrication of very thin, unsupported foils. The plating solution contained NaCN in the ratio of 2.5 g of cyanide for each gram of ZnO and appears to work best with a current density of 75 ma/cm^2. The ratio of cyanide to oxide was slightly higher for cadmium, although the other conditions remain the same.

Extremely thin foils of $Pb^{206,207}$, $Sn^{114,120}$, and Zn^{66} were prepared by a rolling technique. In order to obtain foils thinner than 0.002 in., it was necessary to sandwich them between two sheets of plastic (Fluorothene) and then to roll the sandwich. The final thickness of the metal was determined by the pressure on the rollers.

Special Projects

A small quantity of Hg^{198} was recovered from a sample of gold which had been irradiated in the ORNL Graphite Reactor. The mercury isotope was distilled from the gold at 550°C under vacuum and was trapped in a U-tube immersed in liquid nitrogen. The mercury was converted to inventory form by dissolving in HNO_3.

Preparation of Calutron Charge Materials

Charge preparation activities fall into four general categories: (1) supplying commercially available materials to the production group, (2) synthesizing charge compounds from available chemicals, (3) recycling calutron wash solutions to recover the original compound, and (4) recovering expensive materials from calutron wash solutions to be used for future charges.

In each of these cases it is extremely important that the final charge material have low residual moisture in order to reduce pump-down time in the calutrons. In a number of cases it is also necessary to remove chemical contaminants which may interfere either with the calutron operations or with the refinement chemistry.

During the reporting period, 15 different charge materials were supplied to the production group for the separation of the isotopes of 12 elements (see Table 16).

The technique of fusing charges in metal tubes, by use of the high-frequency induction furnace, has been continued whenever possible because

Table 16. Summary of Charge Preparation Activities

Available Commercially	Synthesized	Product Recovered by Recycling	Expensive Charge Recovered
Pt metal	$FeCl_2$ from Fe	Pt	Pd
Ru metal	$CrCl_3$ from $(NH_4)_2Cr_2O_7$	Ru	Pt
Ir metal	$SnCl_4$ from Sn	Ir	Ir
$TiCl_4$	$LaCl_3$ from La_2O_3	$ErCl_3$	Ru
$CaCO_3$	$ErCl_3$ from Er_2O_3		Er_2O_3
KCN	SeO_2 from Se		Re
$BaC^{13}O_3$	$VoCl_3$ from V_2O_5		
VF_3*			

*This material was not purchased commercially but was obtained from another project at the time of a previous run.

the products are dense, anhydrous, and free from volatile gases. Three of the charges listed in the table, $LaCl_3$, $ErCl_3$, and $FeCl_2$, were fused before they were used in the calutron. Attempts were made to fuse $CrCl_3$, but no container material was found to withstand the corrosive attack of the $CrCl_3$ at the fusion temperature. The material was finally pressed in a 3-in. die, with a hydraulic pressure of 10 tsi.

The preparation of stannic chloride by the direct combination of metallic tin and chlorine was continued into this report period.

Two of the compounds, $ErCl_3$ and $VOCl_3$, were synthesized as charge materials for the first time. Although erbium was a new element to handle, the method of converting the oxide to chloride followed the same general procedure that has been used in synthesizing other rare-earth charges. The synthesis consists of reacting an intimate mixture of 200 g of NH_4Cl and 100 g of the mixed rare-earth oxides (13:1 mole ratio for erbium) in a 2000-ml Vycor dish over a gas burner, removing excess NH_4Cl by vacuum sublimation at 375°C, and fusing the product in a 2-in.-ID nickel tube.

Vanadium oxytrichloride, on the other hand, is being prepared for a current isotope separation by a technique previously untried by the group. The procedure involves reducing V_2O_5 to V_2O_3 by intimately mixing the former with powdered graphite and passing hydrogen over the mixture at 600–650°C; flushing the tube and contents with nitrogen; and chlorinating the lower oxide at 400–450°C. The $VOCl_3$, when pure, is a yellow liquid that boils at 126.7°C at atmospheric pressure.

Selenium dioxide has been prepared, also for a current separation, by oxidizing elemental selenium with hot 8 *N* HNO_3 and evaporating the acidic solution to dryness.

Erbium chloride, in addition to being made from Er_2O_3, was recycled during the separation operation. Initially, only 2833 g of $ErCl_3$ was available, but recycle operations performed while the separation was in progress permitted the charging of 5128 g of the chloride before the series was terminated.

Recovery Program

The final recovery of the unresolved element which has been through a separation run consists in washing the unseparated portion of the charge material from the charge bottle and other calutron parts, concentrating the material involved, purifying the compound, and converting to a stable form. In the particular case of the recovery of erbium, the erbium salts were reclaimed from the calutron parts with dilute HNO_3, concentrated by precipitation with NH_4OH, purified by electrolysis and by sulfide precipitation, and then precipitating

the erbium with $H_2C_2O_4$. The oxalate was collected on filter paper and ignited to oxide in order to be stored for future use. Rhenium, ruthenium, iridium, and Li^6 are being recovered by similar procedures.

HEAVY-ELEMENT SEPARATIONS

The program for separating the isotopes of heavy elements became the responsibility of the Isotopes Division on July 1, 1957. For a period of approximately two months, personnel formerly associated with the calutron operations worked with the members of this Division. Personnel more closely associated with the chemical refinement work transferred to this new Division along with the program.

Calutron Operations

The calutron-component disposal problem existing as the result of prior plutonium separations would continue to increase had the basic philosophy on ion-source assembly and servicing not been changed. To hold the disposal problem to a minimum, an ion source designated as the M-16 was designed in such a manner that all source components could be serviced and reused in plutonium separations. This source also included features which permit its use as a high resolution separator. Immediately after its temperature response had been tested in some stable-isotope collectors, a program was begun in order to determine its limitations as a high resolution calutron.

High Resolution Calutron Component Evaluation. – The operating group working in cooperation with the Isotope Separations Development Group planned and completed 21 calutron runs in an evaluation of components chosen to produce highly resolved ion beams. Comparison of the LIIS (Low Intensity Isotope Separator) source with the M-16 ion source was included in the program. Electrodes designed for use on the LIIS source were compared with standard 0-deg electrodes which had been reduced in vertical and horizontal dimensions by one-third but which retained full dimensions in the direction of the magnetic field. Produced ion beams were scanned; in later runs material was collected in three types of receivers (Fig. 2) and mass-analyzed.

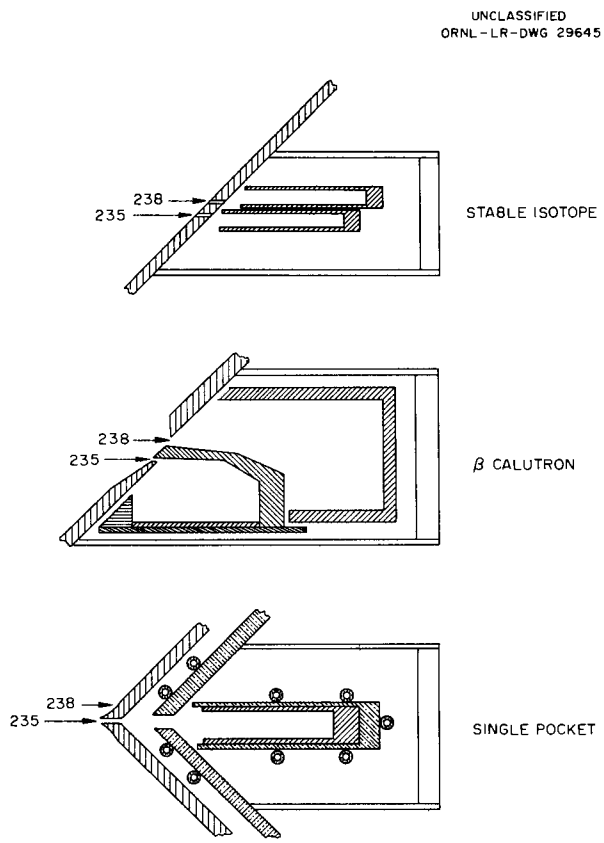

Fig. 2. Receivers Used in High Resolution Calutron Runs.

In all this work, UCl_3 containing 0.7% U^{235} was used as charge material. Little difference was noted between the beam profiles obtained either with the LIIS or the M-16 ion source. However, a marked increase in operational stability was noted when the M-16 was used. A typical beam profile and the mass analysis of material from the various receiver types are presented in Fig. 3 and Table 20, respectively (see p 44 for Table 20).

Separation of Uranium-236. – Based on the information derived from the calutron-component evaluation runs just completed, a U^{236} separation was started, and the following calutron components were used:

Ion Source. – The M-16 ion source consists of a stainless steel charge container, a 30-deg-faced ion exit slit ($\frac{1}{16} \times 2\frac{1}{4}$ in.), a rectangular collimating slot positioned $\frac{3}{32}$ in. behind the ion exit slit, and standard 0-deg electrodes reduced in dimensions by two-thirds.

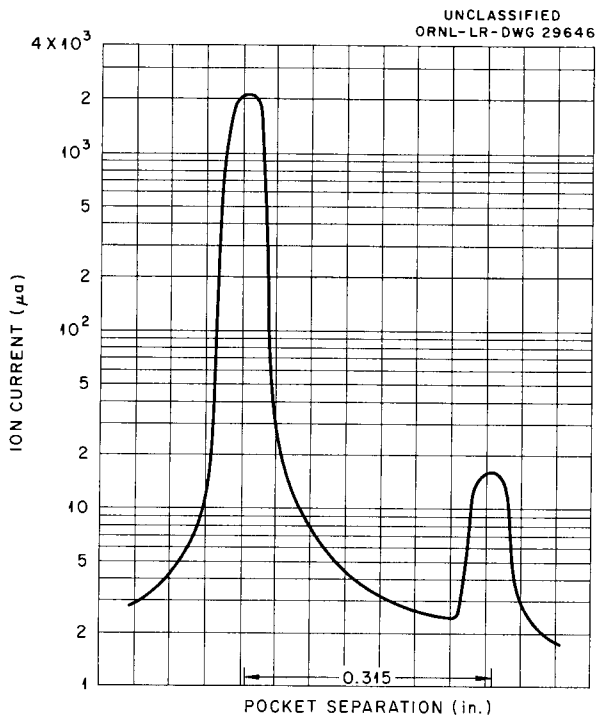

Fig. 3. Beam Profile of Normal Uranium Obtained by Scanning the Beams Across a 0.040-in. Probe.

Ion Beam Baffling. – The received ion beam was limited to a total angular divergence of 6 deg, the restriction being applied by baffles positioned at the 6- and 0-deg beam paths in the 90-deg position. The beam was restricted in the direction of the magnetic field by two stainless steel plates positioned symmetrically with respect to each side of the beam, the plates being separated by a distance of 3 in.

Receiver. – Ions were collected in a modified Beta type of receiver similar to that used in plutonium separation where only one beam was monitored. For the purpose of comparison, ions later were collected in a single-pocket type of receiver in which all ion beams other than U^{236} were rejected by the receiver faceplates.

Charge. – The ion source was charged with UCl_3 of the following isotopic composition: 11% U^{238}, 18.2% U^{236}, 68% U^{235}, and 1.7% U^{234}.

The separation consisted of four calutron runs in which ions were produced during a total of 160 hr at an average rate of 2.2 ma. Ion currents equivalent to 0.570 g of U^{236} were monitored during the collection period. This material was sampled selectively from certain portions of the pocket. The effect of selective sampling on product purity is shown in Table 17. Retention of material in the receiver pocket was 72.3%.

Elemental uranium was consumed at the rate of 0.5 g/hr.

Separation of Uranium-234. – The separation of U^{234} from 40.6 g of UCl_3 has been completed. Isotopic composition of the charge material was as follows: 64.6% U^{238}, 21.9% U^{235}, and 13.5% U^{234}. Calutron equipment was identical to that used in the separation of U^{236} described above except for a slight modification made in the Beta type of receiver used to collect these three isotopes.

Four calutron runs were started, two of which were nonproductive. The first of these nonproductive runs failed because of a water leak in one of the diffusion pumps; the second failure resulted from a seal on a high-voltage insulator being damaged when tank pressure was increased by the water vapor in the diffusion pump. Operation in the other two runs was adversely affected by power surges resulting from 63-in.-cyclotron operations.

Ions were received during a total of 72 hr at an average rate of 1.85 ma. Elemental uranium consumption rate was 0.4 g/hr; process efficiency was 4.1%. An estimated 0.158 g of U^{234} was collected. This material was divided into three parts, selectively taken from various portions of the receiver pocket. Approximately 20.0% of the 0.100 g removed from the pocket was recovered from the area upon which the beam impinged. The product assays, recovered weights, and enhancements achieved are shown in Table 18.

Charge Preparation and Refinement Chemistry

The period from June 1956 to June 1957 was devoted to plutonium separation work and preparation for runs to obtain high-purity U^{236} from feed having an enrichment of approximately 18% U^{236}. It was expected that highly enriched U^{236} from a two-stage operation would satisfy the cross-section requirements for 2 g of 90% U^{236} and 100 mg of 99.9% U^{236}. In addition, an inventory of 30–40% U^{234} could be obtained from this separation.

Sources of plutonium feed having a higher abundance of the isotopes 240, 241, and 242 were investigated, and a program was started early in 1956 to provide plutonium highly enriched in

Table 17. Product Purity of U^{236}, Selectively Sampled

	Estimated Pocket Collection (g)	Sample Number*	Sample Assay (%)			Enhancement U^{236}/U^{235}
			U^{235}	U^{236}	U^{238}	
Type of receiver						
Modified plutonium	0.159	HRC-6-1a	3.69	95.83	0.48	97
		b	1.84	97.82	0.34	198
		c	3.00	96.37	0.63	120
Modified plutonium	0.025	HRC-6-2a	8.93	88.54	2.53	37
		b	5.58	92.87	1.56	62
		c	3.58	96.06	0.36	100
Single pocket	0.386	HRC-6-3a	0.99	98.55	0.46	372
		b	**	**	**	**
		c	**	**	**	**
		d	1.17	98.19	0.64	313
		e	**	**	**	**
Charge material			68.0	18.2	11.0	

*Letter designation indicates selective sampling of material contained in pocket.
**Assay not completed.

Table 18. U^{234} Recovery and Analysis

Sample	Mass Analysis (%)			Recovered Amount (g)	Enhancement U^{234} to U^{235}
	234	235	238		
HRC 1(a)	98.08	1.38	0.58	0.018	115
(b)	98.26			0.015	
(c)	97.16	2.16	0.68	0.067	73
Charge Material	13.5	21.9	64.6		

Pu^{240} and Pu^{241} by further burnup in the MTR of normal-production plutonium. Plutonium fuel elements were prepared as a joint effort of LASL and ORNL groups. The irradiation of these elements in the MTR was started early in 1957.

Fourteen plutonium separation runs have been successfully completed, with production of Pu^{240} up to 92% enrichment and Pu^{241} up to 62% enrichment. These runs required extensive recycling of feed materials and segregation of feed levels.

A containment philosophy for controlling plutonium activities has been applied during the entire plutonium program. Personnel protection has been provided by the use of glove boxes, special transfer techniques, etc. Protective clothing and respirators have been of secondary recourse, but were readily available in case of failure of the primary confinement. To date there have been only two emergencies in which loss of primary protection has occurred. Both involved solution leaks from equipment due to corrosion failure. In both cases the control procedures in effect prevented air-borne activities from exceeding the tolerable levels.

A modification to former HCP chlorination techniques for preparation of $PuCl_3$ to permit

faster conversions consisted in using hexachloropropene (HCP) reflux methods which permitted removal of inhibiting by-products. Unreliable yields of $PuCl_3$ ranged from 70–99% when $Pu_2(C_2O_4)_3$ was refluxed in HCP. Prolonged stirring and extended reflux times above 48 hr failed to guarantee high yields, a given batch apparently reaching its maximum yield in about 12 hr.

Starting with the $PuOCl_3$ in HCl and adding it dropwise to an HCP reflux system gave reproducible yields in the 90–95% range. Spattering and caking of the product made this reaction undesirable, however, since final chlorination to theoretical yields with $COCl_2$ at 500°C was difficult when lumps had to be penetrated by the reacting gas.

The impurity present in the $PuCl_3$ was found to be PuO_2 (not $PuOCl_2$ as might be expected). Since it was found that PuO_2 did not give $PuCl_3$ under the conditions set up for chlorinating $PuOCl_3$, it was apparent that the formation of any PuO_2 must be prevented during the preparation of $PuCl_3$ when the HCP reaction is used.

Satisfactory yields are obtained as follows: Plutonium oxalate is prepared by reducing an HNO_3 solution of plutonium with $(NH_2OH)_2 \cdot H_2SO_4$ and precipitating with $H_2C_2O_4$. The oxalate is washed with hot water to remove any excess $H_2C_2O_4$, and before the cake dries, residual water is removed by washing with three portions of anhydrous alcohol. The alcohol-wet cake is transferred to the chlorination reactor, and CCl_4 is added to provide flash protection while the alcohol is distilled off. A protective nitrogen atmosphere is also provided in the reactor. When the alcohol has been almost completely removed, more alcohol and CCl_4 are added and distilled to ensure removal of any residual water that may be present. Then, the oxalate is well covered with HCP, and the temperature of the reactor is raised to approximately 300°C in order to distill rather than to reflux the HCP. (It has been observed that the reaction of $Pu(C_2O_4)_2$ and HCP is quite rapid at the distillation temperature and that the by-product, trichloroacrylic acid, is removed from the reactor zone. Further investigation of the role of this by-product is expected to show that it is the inhibiting factor when ordinary reflux methods are used in the preparation of $PuCl_3$.) A nitrogen atmosphere is provided during the removal of HCP. Hexachloropropene is added to and distilled away from the plutonium oxalate reaction mass four times. The $PuCl_3$ is then subjected to an atmosphere of $COCl_2$, and the temperature is raised to 500–550°C in order to remove final traces of organic materials and any other impurities of low volatility, such as iron chloride, that may be present. Approximately 2 hr of such treatment at high temperature is sufficient for removal of impurities. The high temperature also tends to sinter the $PuCl_3$ and to provide a chloride less sensitive to hydrolysis. A topical report on the chlorination work is in preparation.

Salvage of plutonium from calutron components and process wastes is a limiting factor with regard to time cycles in plutonium separation work. When expensive or rare feeds are required for separation, an efficient recycle recovery must be provided so that a feed as large as possible may be introduced into the calutron. Development work to cut salvage processing times continues.

Heavy Materials Inventory

Because of the transfer of responsibility to the Isotopes Division, a physical inventory check was started. Several feed levels of plutonium were in the recycle processing. These included 0.7, 5, 13, and 30% Pu^{240}. Such variations in processed materials make any material balance evaluation difficult.

Although work from June to December has made inroads into the problem of material balance, final salvage cleanup will have to be carried over into 1958. Plutonium run No. 16 was completed during this period. This run yielded Pu^{241} of 62.3% and Pu^{240} of 91.6% purity.

A U^{234} separation with 13% feed was made in December. The analyses of three lots of U^{234}, totaling 119 mg of U_3O_8, are shown in Table 18. The feed batch has been held for recovery.

The batches of U^{236} produced from 18% charge feed, as shown in Table 17, have been added to inventory.

A batch of $PuCl_3$ was prepared for the Harwell plutonium separation group. This material was received as nitrate solution and was carried through the normal conversion procedure. A product containing 277.5 g was shipped in October 1957.

The processing of plutonium salvage, gloves, filters, and discarded and broken equipment has been slowed down by the transfer of operators to the calutron operation group as well as by the increased activity in uranium processing. One salvage glove box has been installed in the plutonium storage room in order to provide precipitation and filtering facilities for salvaging the solutions. This box should be in operation early in 1958.

Safety procedures were reviewed, and measures to correct any possible hazards were formulated. The principal weakness in the safety arrangements centers around the long training period required for new operators in the heavy-element separations program.

A physical inventory of all uranium on hand was completed in September. No major adjustments in the book inventory were found to be necessary. A system of batch cards for products in inventory was initiated in August. These cards were distributed to the AEC and to the ORNL Isotope Sales Department in order to provide information as to availabilities of the various materials in inventory.

AEC-approved shipments of isotopes of the heavy elements for the year 1957 are listed in Appendix C. The shipments are summarized as follows:

Isotope	Number of Shipments	Weight (g)
U^{234}	16	2.3080
U^{235}	13	129.5134
U^{236}	9	0.4798
U^{238}	33	2288.2940
Pu^{239}	7	1.0170
Pu^{240}	13	4.3280
Pu^{241}	8	0.6410
Th^{230}	5	0.1966
Th (normal)	5	3000.0000
	109	5426.7778

ISOTOPE SEPARATIONS DEVELOPMENT

Efforts of the development group have been directed toward improvement of the isotope separations process. These efforts may be grouped into four general classifications:

1. design of new, or modification of existing, calutron components and the evaluation of the resulting system,
2. engineering and installation of various types of equipment and building utilities required for efficient calutron processing,
3. investigation of methods of isotope separation other than the conventional electromagnetic process,
4. miscellaneous interrelated production and development activities that are required in order to keep equipment performance levels up previously established standards.

A discussion of various projects initiated or investigated during the past 13 months follows.

270-deg Two-Pass Separator

The need for high product purity and the inefficiency of a second-pass separation scheme led to an investigation of an ion source designed to produce two passes in a single-stage operation. The source was equipped with a flat-grid electrode system which theoretically focused the beam in the 90-deg position. At this point, unwanted isotope beams were blocked, and the desired beam was allowed to travel through an additional 180 deg to a second focal position. The schematic layout for this system, as set up for a potassium separation, is shown in Fig. 4. Test runs made with nitrogen revealed that the desired degree of focus was not obtained at the 90-deg position and that transmission from the 90- to the 270-deg position was less than expected. Improved focusing in 90-deg position resulted from the use of shorter beam radii, indicating that the beam produced was not parallel at the source but has a possible 1- to 2-deg angular divergence from the normal. This divergence must be reduced before the 270-deg two-pass machine can be used as a practical separator.

M-16 Type of Ion Source Assembly

The separation requirements foreseen in heavy-element separation led to the design of a high-temperature ion source utilizing a positively leakproof charge container. Further design features included the means for removal of the arc chamber and heater-oven assembly (cross-section view shown in Fig. 5) as a single unit merely by loosening two screws when the charge is exhausted. Parts were precision-machined in such a manner that alignment of a new assembly was obtained merely by tightening the same two screws. Assembly of the unit in a dry box is quite simple. The use of this source in plutonium separation

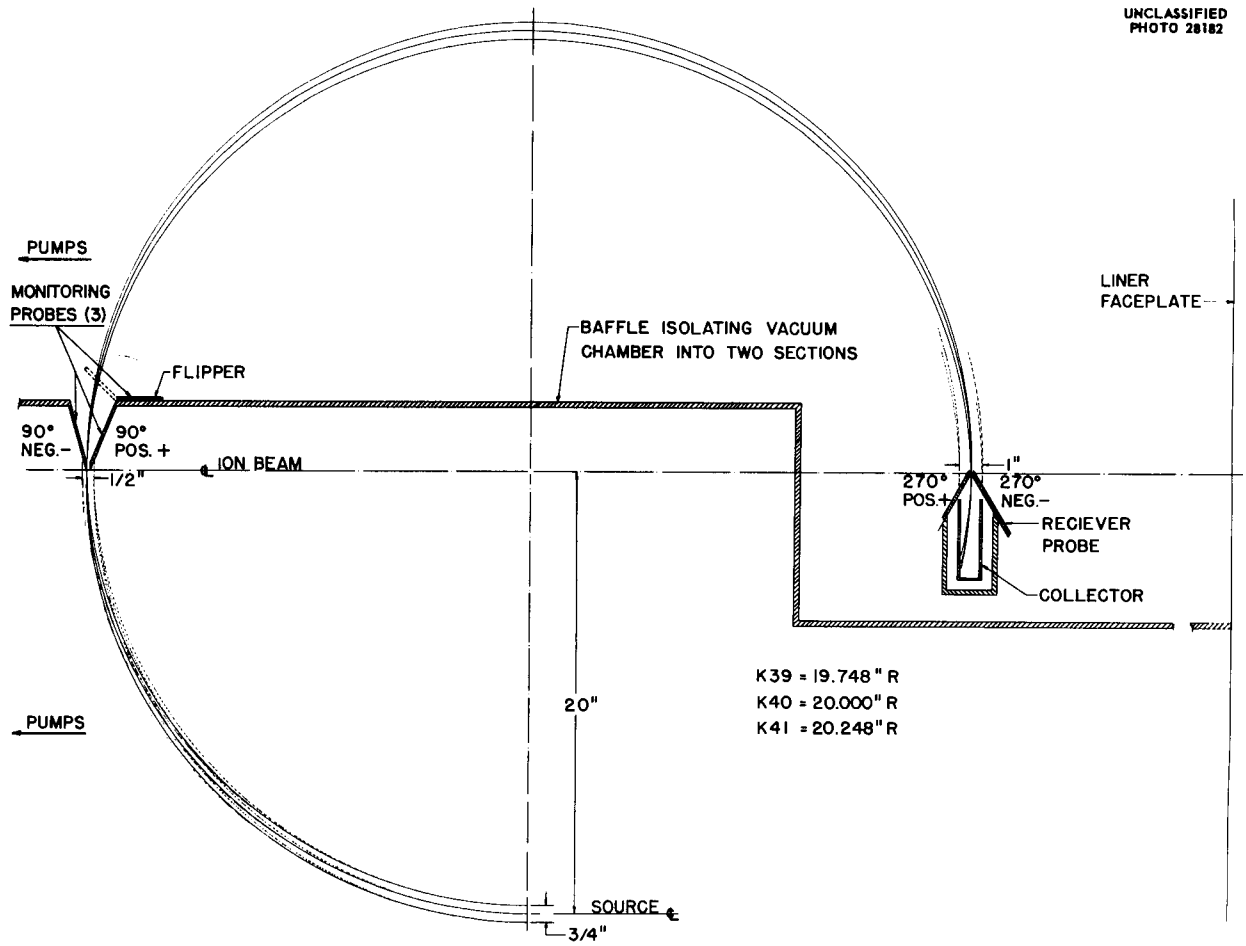

Fig. 4. Schematic Beam Layout for High Purity Isotope Collection at the 270-deg Position.

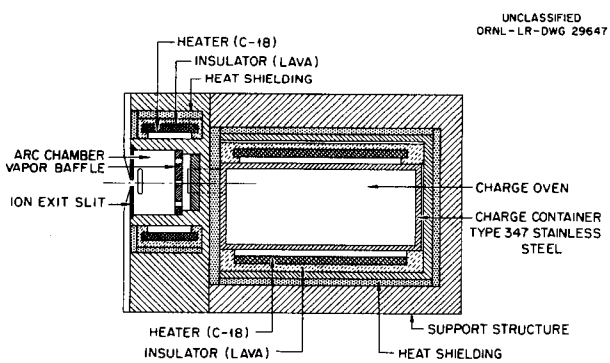

Fig. 5. Cross Section of High-Temperature Ion Source.

should eliminate the disposal of an ion source following each production run.

M-18 Type of Ion Source

Evaluation runs in the M-16 source with lanthanum, erbium, and uranium indicated that a similar unit (designated M-18) having increased charge capacity would be a more satisfactory source than the M-14 used in all high-temperature separations since 1950. In order to increase the charge capacity to the desired amount, it was necessary to lower the arc chamber assembly ½ in. relative to other calutron components. Thus, use of this

source requires moving the receiver and baffle assemblies ½ in. in order to maintain proper orientation of components. This source, which will accommodate the use of either graphite or stainless steel charge containers, is in the final stages of assembly.

Carbon-13 Receiver

The desire to produce a sample of C^{13} enriched from 1.1% to 90% in a single pass initiated a change from conventional receiver design. The modified receiver incorporates the use of two water-cooled defining faceplates in addition to interpocket shielding as shown in Fig. 6. The defining faceplates, 1 and 2, are $\frac{3}{16}$-in.-thick copper plates separated by a distance of ½ in. These plates contain slots through which the beams pass, the slots being separated by 2.022 in. in the source-receiver plane. The C^{13} beam is defined by a 0.125-in. slot cut in plate 1 and the receiver is positioned in the tank in such a manner that the focal point falls in this slot. The corresponding slot in plate 2 is increased in size to 0.312 in., and the two slots are positioned with a 0.047-in. center-line offset in order to compensate for the angular divergence of the ion beam. The defining slots for C^{12} are each 0.500 in. in size, being made sufficiently large for none of the ion beam to be restricted by the slot.

The purpose of two defining plates is to minimize the amount of unresolved carbon in the C^{13} pocket by reducing the angle through which entry is possible. Maximum C^{13} purity attained in this receiver was 90.8%.

Vanadium-50 Receiver

A scheduled separation of V^{50}, utilizing the M-16 type of ion source with calutron components arranged to produce high resolution, dictated a new receiver design if optimum purity were to be achieved. The receiver, shown in schematic cross section in Fig. 7, shields the V^{50} from the V^{51} by making physical contact between the V^{51} pocket and the defining faceplate. Shielding of the product from neutral vanadium is provided by the boxlike structure around the pocket. A monitoring slot and pocket are provided in the mass-53 position for use in optimizing calutron parameters before actual collection of the V^{50} ion beam is attempted.

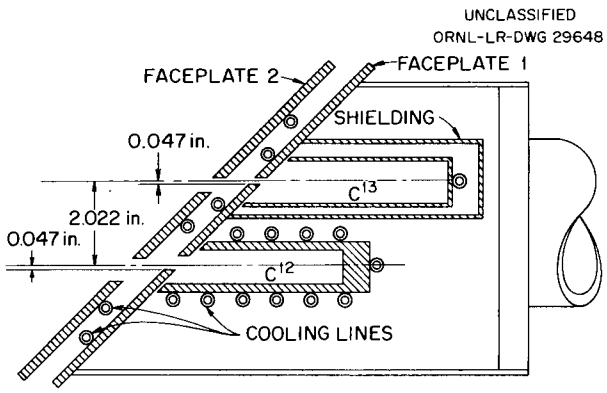

Fig. 6. Carbon-13 Receiver Assembly.

Bombardment-Heated Ion Source

Vaporization of the platinum-palladium group of elements requires charge-oven temperatures ranging from 1700 to 2800°C. The ion source utilized is an electron-bombardment-heated type[8] in which operational stability is closely associated with control of electron emission to the charge container. Modifications were made in the size and position of the openings in the control grid placed between the filament and the charge container. A slight increase in operational stability was achieved.

Two-Filament Ion Source

An M-12 type of ion source was equipped with an auxiliary filament placed at the end of the arc chamber opposite the conventional filament. In operation, the conventional filament was used until it failed. The second filament was then heated and was used until failure occurred. This procedure eliminated one pump-down cycle and essentially doubled the ion reception time per run. The usefulness of such a source is limited to elements which do not form deposits within the arc chamber. Extensive use of the source in carbon separation proved that the shield initially provided for protection of the auxiliary filament from ion bombardment was not necessary. In fact, operation was improved if the auxiliary filament was allowed to act as a reflecting anode until the conventional filament failed. Likewise, during

[8] W. A. Bell, Jr., L. O. Love, and C. E. Normand, *A 2800°C Calutron Ion Source Unit and Its Use in Separating the Isotopes of Pd, Pt, Ru, and Ir*, ORNL-1767 (July 30, 1954).

UNCLASSIFIED
ORNL-LR-DWG 29455

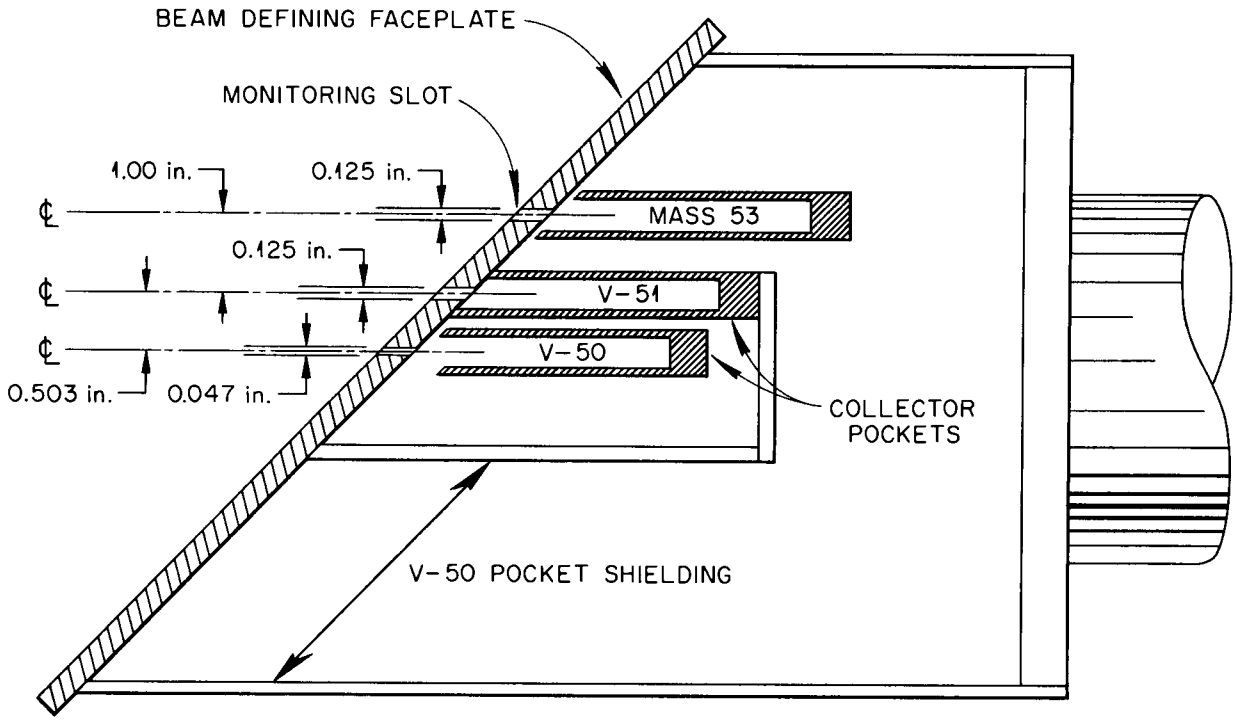

Fig. 7. Vanadium Receiver for Use with High-Resolution Equipment.

use of the auxiliary filament for supplying electrons, the worn filament acted as an anode. It is anticipated that this source will prove workable in approximately 25% of future separations.

XBX Liner Baffles

One of the factors limiting the attainment of high isotopic purity is cross-contamination of the product by neutral particles in the vacuum chamber. The emphasis upon the development of high-resolution equipment and the attainment of higher isotopic purity leads to the development of a new system of baffles for use in the XBX calutrons. These baffles are designed to isolate more completely the source and receiver region of the tank and at the same time to increase the pumping speed in the source region. Fabrication of these baffles is complete, and it is anticipated that they may be evaluated during either the vanadium or the succeeding isotope separation.

Evaluation of Alpha I Equipment

An Alpha I, or cold type of source, was subjected to a series of runs with $FeCl_2$ charge in an XAX tank. The basis for such exploratory evaluation was the projected need for expanding the present isotope separating facilities in order to produce the needed quantities of material within a reasonable time. The existence of an Alpha I track seemed to warrant evaluation of this source before declaring the equipment undesirable for use in stable isotope separation. Considerable electrical and mechanical work was performed in converting from the Alpha II to the Alpha I type of operation. Without any change in ion source design from that used during uranium separation, the source produced 3.3 g of separated product. The charge consumption-rate of $FeCl_2$ was excessive, being 9.7 g/hr, with a process efficiency of 0.26%. Average ion output was 12.4 ma, and product purity of Fe^{58} was 21.0%. Admittedly,

these results could be improved. However, even assuming reasonable improvement, the performance of Alpha I appears to be inferior to that of Alpha II by at least a factor of 2.

Model Magnet of Beta Track

Were expansion of the isotope separation facilities extended to an entire track in Building 9204-3, it would be advantageous to be able to process more than one element at a time. The feasibility of separating the track into sections either by adding iron yokes between existing sides of the track or by otherwise modifying existing coil connections is being investigated. A scale model of the track has been assembled. Magnetic fields within the model tanks will be determined with the assistance of personnel of the Electronuclear Research Division.

Charge Evaluation

An evaluation was made of KCN, $BaCO_3$, and $CaCO_3$ as charge materials for possible carbon separation, with conventional CO_2 charge used as a standard of comparison; KCN and $BaCO_3$ enriched in C^{13} are available for use as possible charge materials. The data presented in Table 19 would indicate the desirability of converting these compounds into CO_2 prior to use as a calutron charge. Therefore, the equipment required for the conversion has been designed and assembled, and the CO_2 from the conversion has been placed in an Inconel container. The technique requires freezing the CO_2 and subsequently evaporating and vacuum-transferring into an Inconel pressure-vessel cooled by liquid nitrogen.

The feasibility of depositing C^{13} on copper in order to form a carbon target backed by copper was demonstrated during the charge evaluation program. Approximately 30 mg of C^{13} was deposited on 16 in.^{2} of surface area. Application of the method may be extended to other elements.

During the separation of titanium, the ion output dropped 30% from that normally achieved. The drop coincided with the use of a new supply of $TiCl_4$ charge material. Unusual operating characteristics of the new material included variation in tank pressure ranging from 0.02 μ to as much as 0.10 μ. Stabilization of the charge flow rate was impossible, and the leak valves for controlling the vapor flow frequently required changing at 2-hr intervals. Apparently the vapor from this fresh $TiCl_4$ was condensing between the needle and the valve seat, thus reducing tank pressure. The resulting pressure increase across the valve would eventually force the liquid out of the valve at irregular intervals to cause the pressure fluctuation noted. The conventional leak valve was replaced with a bellows type of valve incorporating a 45-deg-taper needle which seated against a 90-deg surface. Needle movement was controlled by a differential thread attached to the bellows. This valve required precise adjustment, but once it was properly adjusted, satisfactory ion output could be maintained. Further investigation proved that vapor flow could be controlled with the original valve if the new $TiCl_4$ were deliberately exposed to water vapor before being used as a charge feed. (Presumably, hydrolysis of impurities and/or $TiCl_4$ changed the vapor-pressure characteristics enough to provide a satisfactory charge.)

Table 19. Calutron Performance with KCN, $CaCO_3$, and $BaCO_3$, Compared with CO_2 Charge

Charge Material	Ion Reception (hr)	Average Ion Output (ma)	Peak Ion Output (ma)	Process Efficiency (%)
KCN	83	3.9	6.7	
$CaCO_3$	36	18.5	30.5	1.9
$BaCO_3$	17	7.9*	27.5	2.4
CO_2	3137	44.0	65.0	9.0

*18–20 ma probably would have been reached if ion reception time had been extended to 30–40 hr.

Temperature-Controlled Leak Valve

A leak valve having a zirconium slug encased in stainless steel has been tested for adaptability to calutron service. With the valve operating at 15 psi against 0.02 μ, a controlled leak rate could be achieved with temperature variation; however, the maximum leak obtainable at 600°C increased the tank pressure by only 0.02 μ. The valve passed an insufficient volume and introduced too much time lag to be useful in controlling the feed rate of external calutron charges.

High Resolution Calutron Components

Existing calutron equipment and components were assembled in order to produce an improvement in beam resolution over that normally achieved. Components and conditions chosen were as follows: M-16 type of ion source equipped with $\frac{2}{3}$ standard 0-deg electrodes and 30-deg ion exit slit, $\frac{1}{16} \times 2\frac{1}{4}$ in.; 6-deg total beam divergence bounded by the +6- and 0-deg beam positions within the shimmed region; and stainless steel plates following the beam path from source to receiver, positioned symmetrically with respect to the beam and being 3 in. apart. Three receiver types, shown schematically in Fig. 2, were used with this equipment. The purpose of such receiver modification was to determine, if possible, the extent to which neutral particles within the system contaminate the product. Further comparison was made between the M-16 type of ion source and the source designated as the LIIS (Low Intensity Isotope Separator). The results of this evaluation program are presented in Table 20. The beam profile normally attained is shown in Fig. 3. The purity attained in U^{235} and U^{236} is less than that possible as indicated by the beam profile. It must be concluded either that operation is not maintained at these levels or that neutral contamination materially limits high-purity separations.

XAX Tank-Front Installation

A new tank front was designed to replace the obsolete high-voltage barrier formerly associated with the XAX calutrons. Included in the project were relocation of water lines and Lapp-coil insulators to more accessible positions, modification of electrical connections, and installation of Pressuretrols to protect equipment should water flow become restricted. Existing alcohol cooling facilities were retained by incorporating minor changes in the location of certain pipes.

Automatic Temperature Controls

All furnaces in the Isotope Chemistry Recovery Laboratory and in the Charge Preparation Laboratory have been equipped with automatic temperature controls. With this system it is possible to leave furnaces in operation overnight, thus materially increasing their productivity.

XBX Heater-Supply Control

Electrical circuits required for placing the charge-oven and arc-chamber heater supplies on either automatic or manual control have been designed. The system will use the bombardment-heater supplies in addition to the supplies presently in use. Marked improvement in temperature regulation is expected.

Monitoring Devices

Continuous monitoring of the magnetic-field current or positive accelerating voltage is now provided for the XAX calutron system. Continuous-monitoring equipment aids in the evaluation of operating performance of the equipment.

Chemical Processes in Isotope Separation

The liquid-liquid extraction of calcium acetate into 0.2 *M* di-2-ethylhexyl phosphoric acid in kerosene from 0.1 *M* acetic acid was tested for a possible isotope effect. Two experiments, each consisting of eight manual stages, were completed. No isotope effect was confirmed. Further studies of ion exchange by the use of Retardion resin also showed no discernible calcium isotope effect.

Refinement of the isotopes of Re, Eu, C, La, and U has been a joint effort of the development and production groups. A procedure for the purification of Eu_2O_3 from other rare earths and for the refinement of the separated isotopes has been written.

XBX Alcohol Cooling System

The engineering required for establishing low-temperature cooling of XBX calutron components has been completed. The system is comparable to that already in XAX and will permit the use of alcohol refrigerants at −50°C in any or all of the components normally cooled by water. Use of this system, when installed, should reduce neutral

Table 20. High-Resolution Calutron Runs with UCl_3 Charges (0.7% U^{235})

Run Number	Ion Source[a]	Electrodes[b]	Receiver[c]	Assay (% U^{235})	Approximate Enhancement (U^{235}/U^{236})
1	LIIS	15	Sc	Scanned only	Scanned only
2	LIIS	15	Sc	Scanned only	Scanned only
3	LIIS	15	Sc	Scanned only	Scanned only
4	LIIS	15	Sc	Scanned only	Scanned only
5	LIIS	15	SI	80	550
6	LIIS	15	SP	84	735
7	LIIS	15	U	76	450
				88	1040
8	LIIS	15	SP	87.98	1040
9	M-16	15	SI	Scanned only	Scanned only
10	M-16	15	SI	Scanned only	Scanned only
11	M-16	15	SI	Scanned only	Scanned only
12	M-16	15	SI	Scanned only	Scanned only
13	M-16	15	SI	66	275
14	M-16	15	SP	83.83	735
15	M-16	2/3	SP	84.04	750
16	M-16	2/3	SP	93.9	2180
				92.07	1650
17	LIIS	15	U	No assay	No assay
18	LIIS	15	U	72.88	380
				83.25	700
19	M-16	2/3	U	73.2	385
				87.97	1040
20	M-16	2/3	Sc	Scanned only	Scanned only
21	M-16	2/3	Sc	Scanned only	Scanned only

[a]LIIS – Low Intensity Isotope Separator.
M-16 – Intermediate Level High-Temperature Ion Source.

[b]15 – modified and reduced 15-deg electrodes.
2/3 – standard 0-deg electrodes reduced by 1/3.

[c]Sc – single slot scanner probe.
SI – stable isotope type receiver (see Fig. 2).
SP – single pocket type receiver (see Fig. 2).
U – standard β-calutron-type receiver (see Fig. 2).

particle contamination and should improve beam resolution by lowering the gas scattering.

Recording pH Meter

A Micromax has been modified so that the chart continuously records the pH of solutions. The instrument is expected to have wide usage in both chemical refinement and in experiments dealing with isotope separation by chemical ion exchange.

D-C Power Supplies

Two d-c power supplies rated at 30 amp and 150 v were assembled for use in thermal diffusion processes. The initial design, which employed Cetron rectifier tubes, proved inadequate. These tubes were replaced by surplus FG-172 Thyratrons connected as diodes, in order to provide a satisfactory supply.

Carbon Tube Furnace

Elements which are present as impurities in commercial graphite would contaminate isotopes of those elements when they are collected in graphite pockets. Therefore, receiver pockets of this type must be purified by chlorination in a carbon tube-furnace prior to use in isotope collections. However, the furnace required excessive maintenance and was inoperable to the extent that frequently it was impossible to keep a sufficient number of purified pockets on hand. The furnace has been redesigned in order to increase the size of the electrodes, to provide cooling to various exposed parts, and to exhaust the CO and Cl_2 gas in such a manner that corrosion to electrical connections is minimized. In its present state, the furnace has completed 12 purification runs, each maintained at temperatures in excess of 1300°C for 10 hr, without maintenance. A limited power supply prevents attainment of higher temperatures. Impurities in the graphite are reduced from approximately 1300 to 30 ppm.

Mass Spectrometers

Having an interest in high-resolution separations, second-pass separations involving low throughput, and sector-type separators, the development group helped to design and build two mass spectrometers. One was a 6-in.-sector machine; the other was a 180-deg inhomogeneous field instrument of 6 in. radius. General tube and magnet requirements were obtained from A. E. Cameron, Analytical Chemistry Division. Details of design and construction were the responsibility of this group. Performance of these machines, particularly the 180-deg inhomogeneous field instrument, may be quite useful in deciding the type of separator best suited for enrichment of radioisotopes and for high resolution work.

ORNL SS MATERIALS CONTROL – X-10 SITE

During 1957 the AEC instituted a new procedure for the distribution of nuclear materials. This procedure requires that both the estimation of new materials requested and the returns to production channels be subdivided into quarter-years. Each submission covers five quarter-year periods. The procedure added previously excluded materials to the forecast-and-allotment system.

The number of lots of material received in 1957 increased by about 5% over 1956. Material requests issued increased slightly, and the number of reports issued increased 6%. The number of shipments declined 25% because of larger quantities per shipment. For example, one special shipment was made which, if handled normally, would have resulted in 12 separate ones. The number of internal audits and surveys also declined, but this was because the scope of this program has been enlarged, and more comprehensive audits and surveys are being performed. A comparison of the number of the above functions is outlined below:

	1956	1957
Material receipts, number of lots	456	478
Material shipments, number of lots	476	359
Material requests issued	157	160
Material reports issued	110	117
Internal audits and surveys	113	91

Of the 478 shipments received during 1957, 69 were truckload lots and 12 were carload lots; 16 of the 359 shipments were trailerload lots.

The per cent net SS inventory changes from December 31, 1956, to December 31, 1957, are as follows:

Material	Per Cent Increase (+) or Decrease (−)
Enriched uranium	+327
Normal uranium	−3.5
Depleted uranium	−2.1
Plutonium	+39.2
Thorium	+17.9
U^{233}	+236.9

A building for the storage of scrap thorium was erected during 1957.

A paper entitled "SS Material Control Problems at a Research Installation" was given at the 1957 AEC–Contractor Materials Management Meeting. The paper pointed out the difficulties encountered by researchers in accounting for thousands of small-quantity samples in the forms of solution and miscellaneous shapes. It also suggested that the AEC define a fixed limit below which formal accountability would be eliminated.

APPENDIX A

PRIOR ORNL REPORTS COVERING ISOTOPE PROGRAMS

Radioisotopes

Radioisotope Production and Process Development Annual Report for 1956, ORNL-2303

Stable Isotopes

Stable Isotopes Division Semiannual Progress Report for Period Ending November 30, 1956, ORNL-2236

Heavy-Element Isotopes

Electronuclear Research Division Semiannual Progress Report for Period Ending March 20, 1956, ORNL-2140

APPENDIX B

GLOSSARY

The electromagnetic separation process is unique, and it has developed a language of its own. In order to reduce the confusion as much as possible, this Glossary has been added as part of the Appendices.

Accelerating electrodes – Slits parallel to the exit slit on which draw-out voltages are applied and through which ions are accelerated.

Arc chamber – Box for receiving vapor (from charge bottle) from which a low-pressure arc is formed by ionization.

Calutron – 180-deg electromagnetic separator.

CCR – Charge consumption rate.

Charge bottle or charge container – Bottle for containing the element or compound to be processed.

Collimating slot – Opening through which primary electrons from the filament enter the arc chamber.

E – Ion receiver assembly.

Enhancement – The ratio of the wanted isotope in the product to the unwanted isotope(s) in the product divided by the ratio of the wanted isotope in the charge to the unwanted isotope(s) in the charge.

GKV – Potential of negative electrode at the source.

Innage time – Time that the positive ion current is going into the receiver.

Ion beam – Stream of positive ions following a semicircular path from the source to the receiver.

Ion exit slit – Slit adjacent to the arc through which the ions are drawn out by means of accelerating voltages.

Ionization filament – Filament, usually tantalum or tungsten, which, when heated to its emission temperature, furnishes low-voltage electrons which ionize the charge vapor and produce positive ions.

Ion source – The assembly, consisting of a great many components, ultimately responsible for the production of an ion beam.

L – Liner for the vacuum chamber with suitable parts for receiving the source and receiver assemblies.

M – Ion source assembly.

Md – Drain current at source.

MKV – Potential of source.

90-deg baffle – The assembly, 90 deg from the source, which restricts the passage of ions whose angle of exit from the source is greater than is desired at the collection pockets. Usually ±12 deg.

Outage – Time tank is down for repairs, termination, etc.

PE – Process efficiency, amount of desired material collected divided by the amount used from charge bottle.

Pump-down – Evacuation of the vacuum tank.

Q – Positive ion current to the receiver.

Zero degree ion beam – Ions emerging normal to the source. (Divergent ion beam refers to a beam whose angle differs from normal at the source.)

APPENDIX C

SHIPMENTS OF HEAVY-ELEMENT ISOTOPES – 1957

Isotope	Shipped To	Amount (g)	Purity (%)
U^{234}	Argonne National Laboratory	0.005	96.88
	General Electric Company (Hanford)	0.001	96.88
	Oak Ridge National Laboratory	0.131	96.88
	Argonne National Laboratory	0.048	93.44
	AERE, Harwell, U. K.	0.099	93.44
	K-25	0.003	93.44
	Oak Ridge National Laboratory	0.030	93.44
	University of California Radiation Laboratory	0.026	93.44
	Oak Ridge National Laboratory	0.118	93.00
	K-25	0.003	93.00
	Oak Ridge National Laboratory	0.162	79.51
	Atomic Energy of Canada, Limited	0.096	51.70
	General Electric Company (Hanford)	0.015	51.70
	Y-12	0.104	13.50
	Y-12	0.123	13.00
	Oak Ridge National Laboratory	1.344	10.68
		2.308	
U^{235}	K-25	0.003	99.994
	Columbia University	0.0118	99.994
	Oak Ridge National Laboratory	2.496	99.994
	K-25	0.003	99.99
	Argonne National Laboratory	0.020	99.94
	Oak Ridge National Laboratory	5.9085	99.93
	Oak Ridge National Laboratory	4.998	99.93
	Argonne National Laboratory	2.000	99.91
	U. S. Geological Survey	0.010	99.91
	University of California Radiation Laboratory	2.3700	99.88
	Los Alamos Scientific Laboratory	1.694	99.88
	General Electric Company (Hanford)	10.000	99.70
	Los Alamos Scientific Laboratory	100.000	99.70
		129.5143	
U^{236}	Argonne Notional Laboratory	0.0118	96.60
	AERE, Harwell, U. K.	0.101	95.48
	K-25	0.249	95.48
	Naval Research Laboratory	0.001	95.48
	U. S. Naval Radiological Laboratory	0.0012	95.40
	Argonne National Loboratory	0.028	94.77
	Atomic Energy of Canada, Limited	0.051	94.77
	University of California Radiation Laboratory	0.025	94.77
	U. S. Naval Radiological Laboratory	0.0118	28.90
		0.4798	

Shipments of Heavy-Element Isotopes – 1957 (continued)

Isotope	Shipped To	Amount (g)	Purity (%)
U^{238}	K-25	0.001	99.9999
	Atomic Energy of Canada, Limited	4.240	99.9997
	Knolls Atomic Power Laboratory	5.012	99.9997
	Knolls Atomic Power Laboratory	10.000	99.9997
	Los Alamos Scientific Laboratory	14.990	99.9997
	University of California Radiation Laboratory	5.017	99.9997
	Oak Ridge National Laboratory	0.107	99.9994
	Chalk River	10.000	99.999
	Argonne National Laboratory	0.030	99.9988
	K-25	0.003	99.9956
	Westinghouse Electric Corporation	25.500	99.9956
	Chalk River	11.79	99.99
	K-25	0.003	99.99
	Knolls Atomic Power Laboratory	73.500	99.981
	Oak Ridge National Laboratory	2.000	99.981
	Oak Ridge National Laboratory	2.290	99.981
	Oak Ridge National Laboratory	5.420	99.981
	Oak Ridge National Laboratory	136.900	99.981
	Oak Ridge National Laboratory	150.000	99.981
	AEC-SRO	34.100	99.981
	Westinghouse Electric Corporation	80.500	99.981
	Knolls Atomic Power Laboratory	140.500	99.971
	Knolls Atomic Power Laboratory	254.550	99.971
	Los Alamos Scientific Laboratory	10.520	99.971
	Los Alamos Scientific Laboratory	504.000	99.971
	Oak Ridge National Laboratory	1.741	99.971
	Oak Ridge National Laboratory	2.05	99.97
	University of California Radiation Laboratory	1.06	99.9
	University of California Radiation Loboratory	2.87	99.9
	Westinghouse Electric Corporation	49.5	99.9
	AERE, Harwell, U. K.	250.00	99.9
	Belgian AEC	500.00	99.9
	Oak Ridge National Laboratory	0.10	99.9
		2,288.294	
Pu^{239}	Oak Ridge National Laboratory	0.003	99.89
	Oak Ridge National Laboratory	0.200	99.89
	Oak Ridge National Laboratory	0.002	99.81
	Oak Ridge National Laboratory	0.109	99.81
	Phillips Petroleum Company (MTR)	0.698	99.80
	Oak Ridge National Laboratory	0.003	99.80
	Oak Ridge National Laboratory	0.002	99.80
		1.017	

Shipments of Heavy-Element Isotopes – 1957 (continued)

Isotope	Shipped To	Amount (g)	Purity (%)
Pu^{240}	Oak Ridge National Laboratory	0.237	92.20
	University of California Radiation Laboratory	0.202	88.10
	Argonne National Laboratory	0.050	87.17
	Argonne National Laboratory	0.053	87.17
	Oak Ridge National Laboratory	0.052	87.17
	Los Alamos Scientific Laboratory	0.396	83.1
	Los Alamos Scientific Laboratory	0.577	80.27
	Phillips Petroleum Company (MTR)	0.077	80.27
	Oak Ridge National Laboratory	0.151	80.08
	Phillips Petroleum Company (MTR)	0.333	79.85
	Argonne National Laboratory	0.015	79.71
	Los Alamos Scientific Laboratory	1.024	74.01
	Los Alamos Scientific Laboratory	1.161	74.01
		4.328	
Pu^{241}	Brookhaven National Laboratory	0.201	63.37
	Oak Ridge National Laboratory	0.015	62.11
	Argonne National Laboratory	0.045	57.9
	Brookhaven National Laboratory	0.042	52.37
	Brookhaven National Laboratory	0.025	46.74
	Brookhaven National Laboratory	0.167	40.73
	Oak Ridge National Laboratory	0.093	34.50
	University of California Radiation Laboratory	0.053	22.80
		0.641	
Th^{230}	K-25	0.051	90.02
	AERE, Harwell, U. K.	0.0366	90.02
	Oak Ridge National Laboratory	0.002	90.02
	Oak Ridge National Laboratory	0.002	90.02
	Oak Ridge National Laboratory	0.105	87.85
		0.1966	
Thorium Normal	University of California Radiation Laboratory	1,000.000	Normal
	Argonne National Laboratory	950.000	Normal
	Ames Laboratary	475.000	Normal
	Brookhaven National Laboratory	475.000	Normal
	Oak Ridge National Laboratory	100.000	Normal
		3,000.000	

APPENDIX D

PAPERS CONCERNING USAGE OF ENRICHED ISOTOPES
(Not Previously Reported)

Publications	Isotopes Used
A. W. Schardt and J. P. Welker (Brookhaven National Laboratory), "Decay Scheme of Se^{75} and Ge^{75}," *Phys. Rev.* **93**, 916 (1954).	Ge^{74}
M. H. MacGregor and M. L. Wiedenbeck (University of Michigan), "The Third Forbidden Beta Spectrum of Rubidium-87," *Phys. Rev.* **94**, 138 (1954).	Rb^{87}
F. N. Spiess (University of California Radiation Laboratory), "Alpha Emitting Isomer: Polonium-211," *Phys. Rev.* **94**, 1292 (1954).	$Pb^{206,208}$
J. M. LeBlanc, J. M. Cork, and S. B. Burson (Argonne National Laboratory), "The Activities of Zn^{71}," *Phys. Rev.* **94**, 1436 (1954).	Zn^{70}
M. Sakai, J. L. Deck, W. S. Anderson, and J. D. Kurbatov (Ohio State University), "Decay Scheme of Co^{56}," *Phys. Rev.* **95**, 101 (1954).	Fe^{56}
T. T. Sugihara, R. H. Herber, W. E. Bennett, and C. D. Coryell (Massachusetts Institute of Technology), "The Absence of *K*-Capture in the Decay Scheme of Pb^{205}," *Phys. Rev.* **95**, 298 (1954).	Pb^{204}
A. O. Burford, J. F. Perkins, and S. K. Haynes (Vanderbilt University), "Intensities of the Radiations from Hf^{175}," *Phys. Rev.* **95**, 303 (1954).	Hf^{174}
G. Scharff-Goldhaber and M. McKeown (Brookhaven National Laboratory), "New Isomers in Bromine and Chlorine," *Phys. Rev.* **95**, 613 (1954).	$Cl^{35,37}$, $Br^{79,81}$
N. S. Wall (Massachusetts Institute of Technology), "Neutron Binding Energies from $(d,p)Q$ Values," *Phys. Rev.* **96**, 664 (1954).	Zr, Mo, Sn, Ce, Nd, Cd
T. H. Handley and E. A. Olson (Oak Ridge National Laboratory), "Neutron-Deficient Activities of Praseodymium," *Phys. Rev.* **96**, 1003 (1954).	$Ce^{136,138}$, Nd^{142}
J. W. Mihelich, M. McKeown, and M. Goldhaber (Brookhaven National Laboratory), "*E*3 Isomer in Ir^{191}," *Phys. Rev.* **96**, 1450 (1954).	$Ir^{191,193}$
V. K. Fischer (University of California Radiation Laboratory), "Decay of Pm^{150}," *Phys. Rev.* **96**, 1549 (1954).	Nd^{150}
S. B. Burson, W. C. Jordan, and J. M. LeBlanc (Argonne National Laboratory), "Decay of $_{32}Ge^{75}$ (49 sec), $_{32}Ge^{77}$ (52 sec), and $_{32}Ge^{77}$ (12 hr)," *Phys. Rev.* **96**, 1555 (1954).	$Ge^{74,76}$
W. C. Jordan, S. B. Burson, and J. M. LeBlanc (Argonne National Laboratory), "Decay of $_{22}Ti^{51}$ (5.8 min)," *Phys. Rev.* **96**, 1582 (1954).	Ti^{50}
E. C. Campbell, R. W. Peelle, R. W. Maienschein, F. C. and P. H. Stelson (Oak Ridge National Laboratory), "Decay and Fast Neutron Excitation of Zr^{90m}," *Phys. Rev.* **98**, 1172 (1955).	Zr^{90}
B. Farrelly, L. Koerts, N. Benczer, R. Van Lieshout, and C. S. Wu (Columbia University), "Radiations of Sb^{122}," *Phys. Rev.* **98**, 1172 (1955).	Sb^{121}
C. L. McGinnis (National Bureau of Standards), "The Disintegration of 5.8-Day Sb^{120}," *Phys. Rev.* **98**, 1172 (1955).	Sn^{119}

Publications	Isotopes Used
B. L. Saraf, J. Varma, and C. E. Mandeville (Bartol Research Foundation), "Radiations from Y^{90}, Zr^{97}, Pr^{142}, and Pr^{143}," *Phys. Rev.* **98**, 1206 (1955).	Zr^{96}
L. W. Fagg, E. A. Wolicki, R. O. Bondelid, K. L. Dunning, and S. Snyder (Naval Research Laboratory), "Coulomb Excitation of Energy Levels in Te and Ag," *Phys. Rev.* **98**, 1538 (1955).	$Te^{123,125}$, $Ag^{107,109}$
C. E. McFarland, F. B. Shull, A. J. Elwyn, and B. Zeidman (Washington University), "The Stripping Reactions $Fe^{56}(d,p)Fe^{57}$ and $Fe^{57}(d,p)Fe^{58}$," *Phys. Rev.* **99**, 665 (1955).	Fe^{57}
C. E. Weller and J. C. Grosskreutz (University of Texas), "Gamma Rays from the Proton Bombardment of Cu^{63} and Cu^{65}," *Phys. Rev.* **99**, 655 (1955).	$Cu^{63,65}$
L. J. Lidofsky, N. Benczer, and V. K. Fischer (Columbia University), "Radioactive Decay of Ca^{47}," *Phys. Rev.* **99**, 658 (1955).	Ca^{46}
S. B. Burson, J. M. LeBlanc, and D. W. Martin (Argonne National Laboratory), "Radiations from ${}_{50}Sn^{125}$ (9.7 day and 9.5 min)," *Phys. Rev.* **99**, 660 (1955).	Sn^{124}
A. W. Schardt and J. P. Welker (Brookhaven National Laboratory), "Energy Levels of As^{75}," *Phys. Rev.* **99**, 810 (1955).	Ge^{74}
B. Farrelly, L. Koerts, N. Benczer, R. Van Lieshout, and C. S. Wu (Columbia University), "Radiations from Sb^{122}," *Phys. Rev.* **99**, 1440 (1955).	Sb^{121}
J. R. Wilkinson and R. K. Sheline (Florida State University), "A New Radioactivity Mn^{53}," *Phys. Rev.* **99**, 1630 (1955).	Cr^{53}
J. P. Mize, M. E. Bunker, and J. W. Starner (Los Alamos Scientific Laboratory), "Nuclear Levels of Lu^{175}," *Phys. Rev.* **100**, 1390 (1955).	Hf^{174}
L. Cranberg and J. S. Levin (Los Alamos Scientific Laboratory), "Neutron Scattering at 2.45 Mev by a Time-of-Flight Method," *Phys. Rev.* **103**, 343 (1956).	Pb^{206}
P. F. Yergin and B. P. Fabricand (University of Pennsylvania), "(γ,n) Cross Sections of Nuclides Near Neutron Number 50," *Phys. Rev.* **104**, 1334 (1956).	$Sr^{86,87,88}$, $Zr^{90,91,92}$
L. L. Lee, Jr., and F. P. Mooring (Argonne National Laboratory), "Low-Lying $T = O$ Levels in P^{30}," *Phys. Rev.* **104**, 1342 (1956).	S^{34}
R. W. Wood (Brookhaven National Laboratory), "Slow-Neutron Resonance Scattering in Ag, Au, and Ta," *Phys. Rev.* **104**, 1425 (1956).	$Ag^{107,109}$
J. P. Schiffer, M. S. Moore, and C. M. Class (Rice Institute), "Compound States of the System $Ni^{58} + p^{+}$," *Phys. Rev.* **104**, 1661-6 (1956).	Ni^{58}
M. E. Bunker, J. P. Mize, and J. W. Starner (Los Alamos Scientific Laboratory), "Disintegration of Ga^{70}," *Phys. Rev.* **105**, 227 (1957).	Ga^{69}
E. A. Wolicki, L. W. Fagg, and E. H. Geer (Naval Research Laboratory), "Coulomb Excitation of Bromine and Rhenium," *Phys. Rev.* **105**, 238 (1957).	$Br^{79,81}$, $Re^{185,187}$

Publications	Isotopes Used
F. B. Simpson and R. G. Fluharty (Phillips Petroleum Company), "Neutron Transmission Measurements and Resonance Parameters in Cadmium," *Phys. Rev.* **105**, 616 (1957).	Cd^{111}
S. B. Burson, J. M. LeBlanc, and D. W. Martin (Argonne National Laboratory), "Decay of Sn^{125} (9.7 day and 9.4 min)," *Phys. Rev.* **105**, 625 (1957).	Sn^{124}
R. A. Chapman and J. C. Slattery (Rice Institute), "(p,n) Reactions in Mn^{55}, Co^{59}, Zn^{67}, and Zn^{68}," *Phys. Rev.* **105**, 633 (1957).	$Zn^{67,68}$
E. K. Gatchell (University of Rochester), "Charged Pion Production in Lithium," *Phys. Rev.* **105**, 713 (1957).	Li^{6}
F. Boehm and P. Marmier (California Institute of Technology), "Isomer of Iridium-193," *Phys. Rev.* **105**, 974 (1957).	$Ir^{191,193}$
A. J. Bureau and C. L. Hammer (Iowa State College), "Isomeric State of W^{181}," *Phys. Rev.* **105**, 1006 (1957).	$W^{182,186}$
C. M. Braams (Massachusetts Institute of Technology), "Energy Levels of Ca^{43}," *Phys. Rev.* **105**, 1023 (1957).	$Ca^{42,43}$
R. H. Hughes (University of Arkansas), "Isotopes Shifts in the Spectra of Strontium," *Phys. Rev.* **105**, 1260 (1957).	$Sr^{84,86,88}$
B. C. Haldar and Edwin O Wiig (University of Rochester), "New Neutron-Deficient Isotopes of Rhenium," *Phys. Rev.* **105**, 1285 (1957).	W^{180}
B. Hahn, R. Hofstadter and D. G. Ravenhall (Stanford University), "Electron Scattering from Neighboring Nuclei," *Phys. Rev.* **105**, 1353 (1957).	$Ni^{58,60}$, Fe^{56}
H. G. Graetzer and A. B. Robbins (Yale University), "Alpha-Particle Bombardment of Magnesium Isotopes," *Phys. Rev.* **105**, 1570 (1957).	$Mg^{24,25,26}$
D. Lazarus and B. Okkerse (University of Illinois), "Anamalous Isotope Effect in Metallic Diffusion," *Phys. Rev.* **105**, 1677 (1957).	$Fe^{54,58}$
U. L. Schindewolf, J. W. Winchester, and C. D. Coryell (Massachusetts Institute of Technology), "Decay Properties of 74-Second Ag^{111m}," *Phys. Rev.* **105**, 1763 (1957).	Pd^{110}
S. A. Cox and R. M. Williamson (Duke University), "Angular Distribution and Correlation Studies of Be^{9}, B^{10}, and Mg^{24} (d,p) Reactions," *Phys. Rev.* **105**, 1799 (1957).	Mg^{24}
H. Marshak and H. W. Newson (Duke University), "Neutron Resonances in the kev Region: Odd-Intermediate Nuclei," *Phys. Rev.* **106**, 110 (1957).	$Cu^{63,65}$
M. L. Halbert, T. H. Handley, J. J. Pinajian, W. H. Webb, and A. Zucker (Oak Ridge National Laboratory), "Neutron-Transfer Reactions from the Nitrogen Bombardment of Be, C, O, Na, and $Mg^{24,25,26}$," *Phys. Rev.* **106**, 251 (1957).	$Mg^{24,25,26}$
F. K. McGowan and P. H. Stelson (Oak Ridge National Laboratory), "Angular Distribution of Gamma Rays Following Coulomb Excitation in Even-Even Nuclei," *Phys. Rev.* **106**, 522 (1957).	Cd^{114}, Ru^{104}, Pd^{110}, Pt^{194}
E. S. Snyder and S. Frankel (University of Pennsylvania), "Decay of Hf^{181}," *Phys. Rev.* **106**, 755 (1957).	Hf^{180}

Publications	Isotopes Used
V. S. Dubey, C. E. Mandeville, A. Mukerji, and V. R. Potnis (Bartol Research Foundation), "Radiations from W^{185} and W^{187}," *Phys. Rev.* **106**, 785 (1957).	W^{184}
B. L. Cohen and S. W. Mosko (Oak Ridge National Laboratory), "Inelastic Proton Scattering of (p,d) Reactions in Heavy Elements," *Phys. Rev.* **106**, 995 (1957).	$Pb^{206,207,208}$
J. W. Mihelich and B. Harmatz (Oak Ridge National Laboratory), "Some New Isomeric Transitions in Rare Earth Nuclei," *Phys. Rev.* **106**, 1232 (1957).	$Gd^{158,160}$, $Dy^{156,158,160}$
C. K. Bockelman, C. M. Braams, C. P. Browne, W. W. Buechner, R. R. Sharp, and A. Sperduto (Massachusetts Institute of Technology), "Angular Distribution of Protons from the $Ca^{42}(d,p)Ca^{43}$ Reaction," *Phys. Rev.* **107**, 176 (1957).	Ca^{43}
W. R. Cobb and D. B. Guthe (Massachusetts Institute of Technology), "Angular Distribution of Protons from the $Ca^{44}(d,p)Ca^{45}$ Reaction," *Phys. Rev.* **107**, 181 (1957).	Ca^{44}
E. C. Campbell and F. Nelson (Oak Ridge National Laboratory), "Metastable State of Ge^{73}," *Phys. Rev.* **107**, 502 (1957).	$Ge^{72,73}$
E. M. Bernstein and H. W. Lewis (Duke University), "Study of the $Cu^{65}(p,n)Zn^{65}$ Reaction by Conversion Electrons," *Phys. Rev.* **107**, 737 (1957).	Cu^{65}
W. S. Lyon and J. S. Eldridge (Oak Ridge National Laboratory), "Radioactive Ge^{77} and Ge^{77m}," *Phys. Rev.* **107**, 1056 (1957).	Ge^{76}
G. F. Pieper and N. P. Heydenburg (Carnegie Institution of Washington), "Coulomb Excitation of Iron-57," *Phys. Rev.* **107**, 1300 (1957).	Fe^{57}
R. M. Sinclair (Westinghouse Research Laboratory), "Nuclear Energy Levels Excited by Fast Neutrons," *Phys. Rev.* **107**, 1306 (1957).	Ti, Cr, Ni, Zn, Ge, W
E. Brun, W. E. Meyerhof, J. J. Kraushaar, and D. J. Horen (Stanford University), "Decay of Zinc-62," *Phys. Rev.* **107**, 1324 (1957).	Cr^{63}, Zn^{64}
D. D. Kerlee, J. S. Blair, and G. W. Farwell (University of Washington), "Elastic Scattering of Alpha Particles," *Phys. Rev.* **107**, 1343 (1957).	$Pb^{206,207,208}$
H. E. Gove and A. E. Litherland (Atomic Energy of Canada, Ltd., Chalk River), "Comparison of the Mirror Nuclei Mg^{25} and Al^{25}," *Phys. Rev.* **107**, 1458 (1957).	$Mg^{24,25}$
D. G. Gardner and W. W. Meinke (University of Michigan), "Decay Scheme of Co^{62}," *Phys. Rev.* **107**, 1628 (1957).	Co^{62}
R. R. Spencer, G. C. Phillips, and T. Young (Rice Institute), "Inelastic Scattering of Protons from Cu^{65}, Ni^{58}, Ni^{60}, and Ni^{62}," *Phys. Rev.* **108**, 69 (1957).	Cu^{65}, $Ni^{58,60,62}$
M. L. Halbert and A. Zucker (Oak Ridge National Laboratory), "Angular Distribution of N^{13} from N^{14} on Mg^{25}," *Phys. Rev.* **108**, 336 (1957).	Mg^{25}
A. Stolovy and J. A. Harvey (Brookhaven National Laboratory), "Radiation Widths of Levels in Nuclei Near Closed Shells," *Phys. Rev.* **108**, 353 (1957).	Ba^{135}, Pt^{195}, Nd^{145}, Zr^{91}, Sr^{87}, $Sb^{121,123}$

Publications	Isotopes Used
M. Mazari, W. W. Buechner, and R. P. DeFigueriredo (Massachusetts Institute of Technology), "Inelastic Scattering from and (p,α) Reactions of the Copper Isotopes," *Phys. Rev.* **108**, 373 (1957).	$Cu^{63,65}$
C. T. Hibdon (Argonne National Laboratory), "Neutron Total Cross Sections of Chromium and Iron in the kev Region," *Phys. Rev.* **108**, 414 (1957).	Cr^{53}, $Fe^{54,56}$
G. Dearnaley, G. A. Dissanaike, A. P. French, and G. L. Jones (Cavendish Laboratory), "Study of the $B^{11} + p$ Reactions," *Phys. Rev.* **108**, 743 (1957).	B^{11}
E. Norbeck, Jr., and C. S. Littlejohn (University of Chicago), "Experimental Survey of Nuclear Transformations Caused by 2-Mev Lithium Ions," *Phys. Rev.* **108**, 754 (1957).	$Li^{6,7}$
P. Shapiro and R. W. Higgs (Naval Research Laboratory), "Inelastic Scattering of 2.6-Mev Neutrons from Fe^{54}, Fe^{56}, and Fe^{57}," *Phys. Rev.* **108**, 760 (1957).	$Fe^{54,56,57}$
E. der Mateosian and M. Goldhaber (Brookhaven National Laboratory), "Thermal-Neutron Activation Cross Sections of Ge and the Isomeric Ratio Rule," *Phys. Rev.* **108**, 766 (1957).	$Ge^{74,76}$
B. L. Cohen (Oak Ridge National Laboratory), "Coincidence Studies of the $Ni^{58}(p,2p)$ Reaction," *Phys. Rev.* **108**, 768 (1957).	Ni^{58}
J. C. Slattery, R. A. Chapman, and T. W. Bonner (Rice Institute), "Excited States in Be^7 and Be^8," *Phys. Rev.* **108**, 809 (1957).	Li^6
J. W. Mihelich, B. Harmatz, and T. H. Handley (Oak Ridge National Laboratory), "Nuclear Spectroscopy of Neutron Deficient Rare Earths (Tb through Hf)," *Phys. Rev.* **108**, 989 (1957).	Gd, Dy
N. P. Heydenburg and G. M. Temmer (Carnegie Institution of Washington), "Coulomb Excitation of V^{50}, Kr, Xe, Te, and Eu^{151}," *Bull. Am. Phys. Soc.* Ser. II, 1(4), 164 (1956).	V^{50}, $Eu^{151,153}$ $Te^{120,122,124,126,128,130}$
L. W. Fagg, E. H. Geer, and E. A. Wolicki (Naval Research Laboratory), "Coulomb Excitation of V, Ni, Ga, Rb, and Sn," *Bull. Am. Phys. Soc.* Ser. II, 1(4), 165 (1956).	V^{50}, Ni^{61}, $Sn^{115,117,119}$
J. M. Cork, M. K. Brice, L. C. Schmid, and R. G. Helmer (University of Michigan), "Radioactive Decay of Terbium-161," *Bull. Am. Phys. Soc.* Ser. II, 1(6), 297 (1956).	Gd^{160}
B. Hahn, R. Hofstadter, and D. G. Ravenhall (Stanford University), "Electron Scattering from Neighboring Nuclei," *Bull. Am. Phys. Soc.* Ser. II, 2(1), 14 (1957).	$Ni^{58,60}$
J. M. Cork, M. K. Brice, R. G. Helmer, and D. E. Sarason (University of Michigan), "Radiations following Neutron Capture in the Separated Isotopes of Europium," *Bull. Am. Phys. Soc.* Ser. II, 2(1), 16 (1957).	$Eu^{151,153}$
G. W. Callendine, Jr., W. E. Carey, and M. L. Pool (Ohio State University), "X Rays Associated with Samarium-145," *Bull. Am. Phys. Soc.* Ser. II, 2(1), 24 (1957).	Sm^{144}

Publications	Isotopes Used
T. N. Kruse, R. D. Bent, and K. E. Eklund (Columbia University), "Search for Electric Monopole Pair Transitions in C^{12} and Ca^{48} using a Scintillation Pair Spectrometer," *Bull. Am. Phys. Soc.* Ser. II, **2**(1), 29 (1957).	Ca^{48}
P. Fletcher and E. Amble (Columbia University), "Some Moments of Radioactive Iodine Nuclei," *Bull. Am. Phys. Soc.* Ser. II, **2**(1), 30 (1957).	$Te^{124,125}$
F. P. Karriker, H. Marshak, and H. W. Newson (Duke University), "Neutron Resonances in Even-Even Nuclei," *Bull. Am. Phys. Soc.* Ser. II, **2**(1), 33 (1957).	$Cr^{50,52,54}$, Fe^{54}
F. B. Simpson and R. G. Fluharty (Phillips Petroleum Company), "Neutron Resonance Parameters for Sm^{147}, Sm^{149}, Gd^{155}, and Gd^{157}," *Bull. Am. Phys. Soc.* Ser. II, **2**(1), 42 (1957).	$Sm^{147,149}$, $Gd^{155,157}$
R. L. Zimmerman (Brookhaven National Laboratory), "Resonance Parameters of Dysprosium," *Bull. Am. Phys. Soc.* Ser. II, **2**(1), 42 (1957).	$Dy^{161,162,163}$
M. L. Halbert and A. Zucker (Oak Ridge National Laboratory), "Angular Distribution of N^{13} from $Mg^{25}(N^{14},N^{13})Mg^{26}$," *Bull. Am. Phys. Soc.* Ser. II, **2**(1), 59 (1957).	Mg^{25}
A. Zucker, M. L. Halbert, T. H. Handley, J. J. Pinajian, and W. H. Webb (Oak Ridge National Laboratory), "Nitrogen Induced Neutron Transfer Reactions in Be, C, O, Na, Mg^{24}, Mg^{25}, Mg^{26}," *Bull. Am. Phys. Soc.* Ser. II, **2**(1), 59 (1957).	$Mg^{24,25,26}$
R. H. Davis, F. W. Prosser, and C. M. Class (Rice Institute), "Level Parameters of the Compound States Derived from the $Fe^{54}(p,p'\gamma)$ and $Ti^{46}(p,p'\gamma)$ Reactions," *Bull. Am. Phys. Soc.* Ser. II, **2**(1), 60 (1957).	Fe^{54}, Ti^{46}
R. M. Kloepper, R. B. Day, and D. A. Line (Los Alamos Scientific Laboratory), "Lifetimes of the First Excited States of Ca^{40} and Zr^{90}," *Bull. Am. Phys. Soc.* Ser. II, **2**(1), 60 (1957).	Zr^{90}
J. M. Miller and F. S. Houck (Columbia University and Brookhaven National Laboratory), "Reactions of Alpha Particles with Fe^{54}," *Bull. Am. Phys. Soc.* Ser. II, **2**(1), 60 (1957).	Fe^{54}
F. W. Prosser, Jr., C. M. Class, R. H. Davis, J. R. Johnson, and J. P. Schiffer (Rice Institute), "Compound States Found in the Reactions $Fe^{54}(p,p'\gamma)$ and $Ti^{46}(p,p'\gamma)$ Reactions," *Bull. Am. Phys. Soc.* Ser. II, **2**(1), 60 (1957).	Fe^{54}, Ti^{46}
N. P. Heydenburg, and G. F. Pieper (Carnegie Institution of Washington), "Coulomb Excitation Levels in Fe^{57}," *Bull. Am. Phys. Soc.* Ser. II, **2**(1), 61 (1957).	Fe^{57}
C. H. Paris and W. W. Buechner (Massachusetts Institute of Technology), "Excited States of Ni^{58} and Ni^{60}," *Bull. Am. Phys. Soc.* Ser. II, **2**(1) 61 (1957).	Ni^{58}
R. P. Scharenberg and G. Goldring (Massachusetts Institute of Technology), "Angular Distribution of Gamma Rays Following Electric Excitation of Some Low-Lying Rotational States," *Bull. Am. Phys. Soc.* Ser. II, **2**(1), 69 (1957).	Sm^{152}

Publications	Isotopes Used
T. E. Young, G. C. Phillips, and R. R. Spencer (Rice Institute), "Energy Levels in O^{16}, F^{19}, and Cu^{65}," *Bull. Am. Phys. Soc.* Ser. II, 2(2), 104 (1957).	Cu^{65}
R. R. Spencer, G. C. Phillips, and T. E. Young (Rice Institute), "Inelastic Scattering of Protons from Nickel," *Bull. Am. Phys. Soc.* Ser. II, 2(2), 105 (1957).	$Ni^{58,60}$
R. R. Hake, D. E. Mapother, and D. L. Decker (University of Illinois), "H_c vs T Curves for Isotopically Enriched Lead Specimens," *Bull. Am. Phys. Soc.* Ser. II, 2(3), 137 (1957).	Pb^{208}
R. L. Hughes (University of Arkansas), "Isotope Shifts in the Mo I Spectrum," *Bull. Am. Phys. Soc.* Ser. II, 2(4), 200 (1957).	$Mo^{92,94,96,98,100}$
L. W. Fagg (Naval Research Laboratory), "Coulomb Excitation of Cs and Ba," *Bull. Am. Phys. Soc.* Ser. II, 2(4), 207 (1957).	$Ba^{135,137}$
E. F. Bennett (Princeton University), "(p,d) Reactions in Light Nuclei," *Bull. Am. Phys. Soc.* Ser. II, 2(4), 208 (1957).	Mg^{25}
D. D. Snyder and D. J. Montgomery (Michigan State University), "Bulk Density of Separated Lithium Isotopes," *Bull. Am. Phys. Soc.* Ser. II, 2(4), 215 (1957).	$Li^{6,7}$
N. R. Johnson, J. B. Cumming, and I. Masami (Florida State University and Brookhaven National Laboratory), "Decay of Se^{72}," *Bull. Am. Phys. Soc.* Ser. II 2(4), 230 (1957).	Ge^{70}
L. S. August, R. W. Campbell, and Max Goodrich (Louisiana State University), "Decay of Ba^{131}," *Bull. Am. Phys. Soc.* Ser. II, 2(4), 231 (1957).	Ba^{130}
F. Boehm and E. N. Hatch (California Institute of Technology), "Levels in Gd^{155}," *Bull. Am. Phys. Soc.* Ser. II, 2(4), 231 (1957).	Eu^{153}
T. J. Ward, K. P. Jacob, J. W. Mihelich, B. Harmatz, and T. H. Handley (University of Notre Dame and Oak Ridge National Laboratory), "Electron Capture of Tb^{155} to Levels in Gd^{155}," *Bull. Am. Phys. Soc.* Ser. II, 2(5), 259 (1957).	Dy^{156}
H. B. Greene (Oak Ridge National Laboratory), "Calutron Collections of Inert Gas Isotopes," *Bull. Am. Phys. Soc.* Ser. II, 2(5), 279 (1957).	General
J. A. Crawford and D. J. Montgomery (Michigan State University), "Melting Points of Separated Lithium Isotopes," *Bull. Am. Phys. Soc.* Ser. II, 2(6), 299 (1957).	$Li^{6,7}$
D. D. Snyder, R. G. Lefler, and D. J. Montgomery (Michigan State University), "Electrical Resistance of Separated Lithium Isotopes," *Bull. Am. Phys. Soc.* Ser. II, 2(6), 299 (1957).	$Li^{6,7}$
R. W. Boom and H. A. Howe (University of Chicago), "Elastic Scattering of Protons from Zn^{64} and Zn^{66}," *Bull. Am. Phys. Soc.* Ser. II, 2(6), 304 (1957).	$Zn^{64,66}$
D. A. Lind, R. B. Day, and R. M. Kloepper (University of Colorado and University of Chicago), "Studies of Gamma Rays from Inelastic Neutron Scattering," *Bull. Am. Phys. Soc.* Ser. II, 2(6), 309 (1957).	Pb^{206}

Publications	Isotopes Used
A. J. Elwyn, G. N. Glasoe, H. H. Landon, and S. Oleksa (Brookhaven National Laboratory), "Fast Neutron Scattering from Fe and Pb^{206} by Time-of-Flight," *Bull. Am. Phys. Soc.* Ser. II, **2**(7), 357 (1957).	Pb^{206}
R. Barloutaud, T. Grjebine, P. Lehmann, A. Leveque, J. Quidort, and G. M. Temmer (Centre National de la Recherche Scientifique, France), "Research on the Coulomb Excitation of the Second Level of Pt^{194}," *Compt. rend.* **244**, 187 (1957).	Pt^{194}
J. L. Wolfson (Chalk River Laboratory), "High-Energy Forbidden β-ray Transitions from Cs^{134}(2.3 yr), Co^{60}(5.3 yr), Sc^{46}(84 d) and Hg^{203}(47.9 d)," *Can. J. Phys.* **34**, 256 (1956).	Hg^{202}
C. C. McMullen, B. D. Pate, R. H. Tomlinson, and L. Yaffee (McMaster and McGill Universities), "The Half-Life of Ni^{63}," *Can. J. Chem.* **34**, 1742 (1956).	Ni^{62}
L. P. Roy and L. Yaffe (McGill University), "Search for Successive Neutron Capture Reactions on Mg^{26}, Si^{30}, and Cr^{54}," *Can. J. Chem.* **35**, 176 (1956).	Si^{30}, Cr^{54}
C. E. Mandeville, E. Shapiro, R. I. Mendenhall, E. R. Zucker, and G. L. Conklin (Bartol Research Foundation), "Radiations from Zr^{97} and Nb^{97}," *J. Franklin Inst.* **254**, 381 (1952).	Zr^{96}
B. L. Saraf, J. Varma, and C. E. Mandeville (Bartol Research Foundation), "Radiations from Y^{90}, Zr^{97}, Pr^{142}, and Pr^{143}," *J. Franklin Inst.* **258**, 516 (1954).	Zr^{96}
C. E. Mandeville, J. Varma, and B. Saraf (Bartol Research Foundation), "Iridium-194," *J. Franklin Inst.* **259**, 259 (1955).	Ir^{193}
R. P. Schuman, M. E. Jones, and A. C. Mewherter (Knolls Atomic Power Laboratory), "Half-Lives of Ce^{144}, Co^{58}, Cr^{51}, Fe^{55}, Mn^{54}, Pm^{147}, Ru^{106}, and Sc^{46}," *J. Inorg. & Nuclear Chem.* **3**, 160 (1956).	Fe^{54}
F. McClung and J. R. Holmes (University of Southern California), "Isotope Shift in the Spectrum of Mercury," *J. Opt. Soc. Am.* **47**, 297 (1957).	$Hg^{198,202}$
H. W. Wright, E. I. Wyatt, S. A. Reynolds, W. S. Lyon, and T. H. Handley (Oak Ridge National Laboratory), "Half-Lives of Radionuclides," *Nuclear Sci. and Eng.* **2**, 427 (1957).	Fe^{58}, Sr^{84}
W. W. Buechner (Massachusetts Institute of Technology), "Excited States of the Isotopes of Iron," *Physica* **22**, 1126 (1956).	$Fe^{54,57,58}$
L. W. Fagg, E. H. Geer, and E. A. Wolicki (Naval Research Laboratory), "Coulomb Excitation of Medium Weight Nuclei," *Physica* **22**, 1127 (1956).	Ni, Ga, Rb, Sn
J. L. Fowler (Oak Ridge National Laboratory), "Differential Elastic Scattering of Neutrons from Light Nuclei," *Physica* **22**, 1136 (1956).	Li^{6}
P. S. Baker, and C. P. Keim (Oak Ridge National Laboratory), "Radioisotopes from Electromagnetically Enriched Isotopes," *J. Tenn. Acad. Sci.* **31**, 130 (1956).	General

INTERNAL DISTRIBUTION

1. C. E. Center
2. Biology Library
3. Health Physics Library
4. Reactor Experimental Engineering Library
5–6. Central Research Library
7–26. Laboratory Records Department
27. Laboratory Records, ORNL R.C.
28. E. A. Bagley
29. P. S. Baker
30. E. E. Beauchamp
31. C. J. Borkowski
32. G. E. Boyd
33. R. A. Charpie
34. J. A. Cox
35. F. L. Culler
36. R. R. Dickison
37. J. L. Fowler
38. J. H. Gillette
39. W. Y. Gissel
40. J. C. Hart
41. A. Hollaender
42. R. W. Johnson
43. C. P. Keim
44. M. T. Kelley
45. E. Lamb
46. T. A. Lincoln
47. R. S. Livingston
48. L. O. Love
49. K. Z. Morgan
50. D. Phillips
51. M. E. Ramsey
52. P. M. Reyling
53. S. A. Reynolds
54. L. P. Riordan
55. A. F. Rupp
56. H. E. Seagren
57. E. D. Shipley
58. A. H. Snell
59. Hezz Stringfield
60. H. F. Stringfield
61. W H. Sullivan
62. J. A. Swartout
63. E. H. Taylor
64. A. M. Weinberg
65. C. E. Winters
66. E. J. Witkowski
67. E. I. Wyatt
68. ORNL – Y-12 Technical Library, Document Reference Section

EXTERNAL DISTRIBUTION

69. Division of Research and Development, AEC, ORO
70. D. F. Cope, AEC, ORO
71. R. B. Martin, AEC, ORO
72–626. Given distribution as shown in TID-4500 (13th ed., Rev.) under Chemistry–General category (75 copies – OTS)