CENTRAL RESEARCH LIBRARY
DOCUMENT COLLECTION

MARTIN MARIETTA ENERGY SYSTEMS LIBRARIES
3 4456 0350618 7

ORNL-2499
Physics and Mathematics

COMPARISON OF POOL-TYPE REACTOR CRITICAL EXPERIMENTS WITH TWO-GROUP AND THIRTY-GROUP CALCULATIONS

E. G. Silver

OAK RIDGE NATIONAL LABORATORY
CENTRAL RESEARCH LIBRARY
CIRCULATION SECTION
4500N ROOM 175
LIBRARY LOAN COPY
DO NOT TRANSFER TO ANOTHER PERSON
If you wish someone else to see this report, send in name with report and the library will arrange a loan.
UCN-7969 (3 9-77)

OAK RIDGE NATIONAL LABORATORY
operated by
UNION CARBIDE CORPORATION
for the
U.S. ATOMIC ENERGY COMMISSION

CENTRAL RESEARCH LIBRARY
DOCUMENT COLLECTION
LIBRARY LOAN COPY
DO NOT TRANSFER TO ANOTHER PERSON
If you wish someone else to see this document, send in name with document and the library will arrange a loan.

Printed in USA. Price 1.00 cents. Available from the

Office of Technical Services
U. S. Department of Commerce
Washington 25, D. C.

LEGAL NOTICE

This report was prepared as an account of Government sponsored work. Neither the United States, nor the Commission, nor any person acting on behalf of the Commission:

A. Makes any warranty or representation, express or implied, with respect to the accuracy, completeness, or usefulness of the information contained in this report, or that the use of any information, apparatus, method, or process disclosed in this report may not infringe privately owned rights; or

B. Assumes any liabilities with respect to the use of, or for damages resulting from the use of any information, apparatus, method, or process disclosed in this report.

As used in the above, "person acting on behalf of the Commission" includes any employee or contractor of the Commission to the extent that such employee or contractor prepares, handles or distributes, or provides access to, any information pursuant to his employment or contract with the Commission.

ORNL-2499
Physics and Mathematics

Contract No. W-7406-eng-26

APPLIED NUCLEAR PHYSICS DIVISION

COMPARISON OF POOL-TYPE REACTOR CRITICAL EXPERIMENTS WITH TWO-GROUP AND THIRTY-GROUP CALCULATIONS

Ernest G. Silver

Date Issued

MAY 21 1958

OAK RIDGE NATIONAL LABORATORY
Oak Ridge, Tennessee
operated by
UNION CARBIDE CORPORATION
for the
U. S. ATOMIC ENERGY COMMISSION

MARTIN MARIETTA ENERGY SYSTEMS LIBRARIES

3 4456 0350618 7

ABSTRACT

This report contains a description of a series of two-group and multigroup calculations of the critical mass of two clean-geometry configurations of the BSR. It also contains a description of critical experiments that were done to determine the validity of the calculations.

Comparison of the results indicates that the calculations described are capable of predicting the critical mass within about 2% of the measured critical mass under the favorable geometric conditions maintained in the present experiments.

TABLE OF CONTENTS

		Pg. No.
	Abstract	iii
	Introduction	1
I.	The Critical Experiments	3
II.	The Calculations	11
	Geometric Considerations	11
	Nuclear Considerations	13
	The Eyewash Code	13
	The 3G3R Code	16
	The Modified 3G3R Code	21
III.	Examination of Results	24
	References	27
	Acknowledgment	28

INTRODUCTION

A number of digital computer codes are available for the purpose of calculating the critical masses of reactors. Because of the widespread interest in the pool-type reactor, of which the ORNL Bulk Shielding Reactor is the prototype, the present work was undertaken to determine how accurate three specific machine-calculation methods are for predicting the critical mass of two clean-geometry configurations of the BSR. In order to arrive at this evaluation the calculations were carried out first, using the best values of the parameters available, and subsequently critical experiments were done in order to obtain a measured value of the critical masses for comparison with the calculational predictions.

The problems encountered in carrying out the calculations may be considered to be of two types. On the one hand there are the questions of what may be termed nuclear or of microscopic nature. This category involves the choice of nuclear cross sections and diffusion parameters, the question of numbers of groups to approximate the slowing-down behavior of the neutrons, and perhaps the choice of the appropriate mathematical machinery for analytical treatment of the physical occurrences in the reactor.

On the other hand, there are the problems that may be termed the macroscopic or geometric problems. The actual shape of a loading in the BSR is usually more or less irregular, with elements missing or projecting out of the basic configuration, further complicated by the presence of control elements, which may or may not be partially inserted at criticality. These configurations are not directly amenable to calculation, and some sort of approximation must be made in order to arrive at a sufficiently simple geometry to permit calculation. Of the two codes used for these calculations, one code, the UNIVAC "Eyewash" code[1] is limited to spherically symmetric configurations. The other code, the ORACLE three-group three-region code,[2] is limited to one-dimensional calculations in either slab, cylindrical or spherical geometry, with provision for non-infiniteness in the first two geometries by insertion of approximate bucklings.

Since in most calculations both nuclear and geometric uncertainties exist, it is not possible to ascribe these uniquely to any discrepancies between the experiment and the calculation. Therefore, for the present comparison, care was taken to have a simple experimental geometry, namely a parallellepiped with only one central control rod. The control rod was fully withdrawn at critieality in order to eliminate any asymmetries in the flux with respect to the vertical axis. The reactor loading was adjusted to be just critical with the control rod completely withdrawn by use of "partial" elements in selected locations. Fortunately, in the cases of interest, the amount of fuel was very close to the maximum loadable in the configurations, so that the perturbation associated with the use of the partial elements was kept to very small amounts.

I. THE CRITICAL EXPERIMENTS

New, clean fuel elements, each of which consisted of 18 fuel plates, were available for the experiments. Each element contained a nominal 140 g of U^{235} in enrichment of 93%. The precise weight of the U^{235} in each element was known to within 0.1 g. In addition to these 140-g elements, partial elements containing various amounts of uranium less than 140 g were used. In these partial elements the fuel was contained in fuel plates of normal fuel content, but some of the 18 plates present in each element were dummy plates of pure aluminum, so that the metal volume fraction in the partial elements was the same as that in the normal, full, fuel elements. There was also one control-rod element which contained only five fuel plates, three on one side and two on the other, leaving room for two aluminum guide plates and a space for the control rod as shown in Fig. 1. The metal volume fraction in the space between the fuel plates had an average value equal to that of the normal elements. This feature provided a uniform metal-to-water ratio in the entire reactor.

In order to provide the necessary nuclear safety without perturbing the core arrangement, a pair of "guillotines" or control "blades" were also used. These were two cadmium sheets, each having a 9-in. width and a height equal to that of the core, which could be inserted between the core and the water reflector. These blades were suspended from electromagnets which were tied into the safety system of the reactor controls so that any situation calling for a reactor scram would result in their dropping by gravity into place, thereby shutting off the reactor. The central control rod was similarly suspended so that it also would drop in case of a scram signal. The two guillotines represented an estimated 1.5% $\Delta k/k$, with the rod worth being about the same magnitude.

Each critical experiment was carried out with the intent of obtaining a configuration as close to criticality as possible with the central control rod and the control blades fully withdrawn. A check was carried out which determined that the presence of the blades in their withdrawn

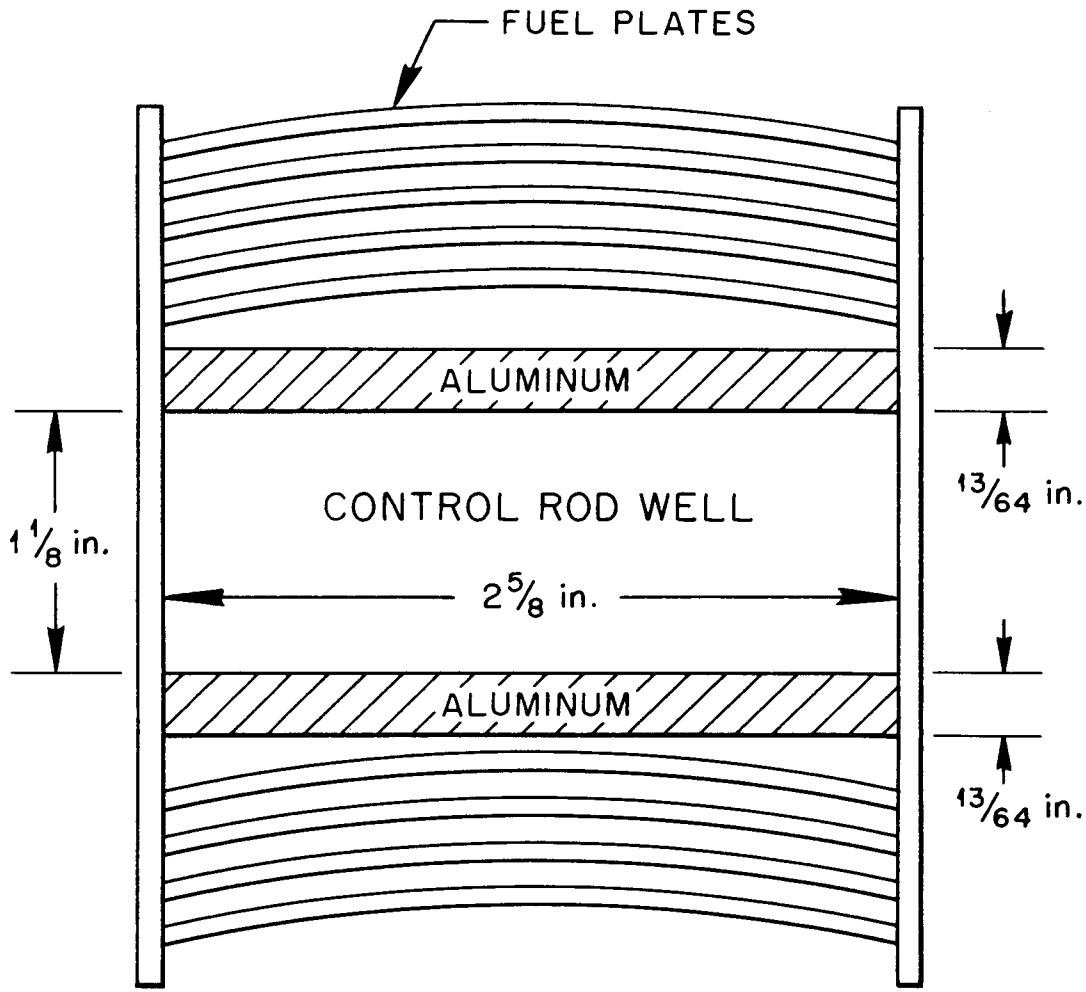

Fig. 1. Cross-Sectional View of Control-Rod Element.

position did not affect the criticality. Three loadings were attempted: one with 24 elements in a 6 by 4 lattice, one with 25 fuel elements in a 5 by 5 lattice, and one with 27 elements in a 3 by 9 lattice. In the 5 by 5 and 3 by 9 arrangements the control-rod position was in the geometric center; in the 6 by 4 configuration it was placed as close to the center as was possible. Figure 2 shows the final loadings of the three configurations with partial elements as indicated.

The 6 by 4 loading was critical with only a single partial element. This partial element contained 109 g of U^{235}, and the reactor was subcritical to an amount judged on the basis of its period to be 0.05% $\Delta k/k$. When a 140-g element was substituted for the partial element the reactor was supercritical with an excess of about 0.25% $\Delta k/k$, again determined from the period of flux increase. Interpolation of these two values indicates that the critical condition would be attained with 114 g of fuel in this element, and this was taken to be the amount needed for criticality.

The 5 by 5 configuration, which had four partial elements symmetrically arranged, was exactly critical with this loading.

Criticality was not attained with the 3 by 9 loading. However, an extrapolation of the reciprocal count rate due to a source vs the mass is given in Fig. 3, from which a rough approximation of the critical mass was made.

The critical masses of the three experimental configurations are given in Table 1. The assigned error of ± 10 g for the 6 by 4 and the 5 by 5 loadings is based on the ± 0.1-g precision with which the fuel content of each element is known and an estimate of a ± 5-g accuracy in determining the criticalities from period measurements.

In order to compare the experiments with the calculations, it was necessary to make two corrections to the measured critical masses. One of these was a correction for temperature. At the time the experiments were performed the pool temperature was 20°C, whereas the temperature used in all calculations was assumed to be 30°C. It was therefore necessary to compute what the experimental critical mass would have been at 30°C.

UNCLASSIFIED
2-01-058-0-53 R2

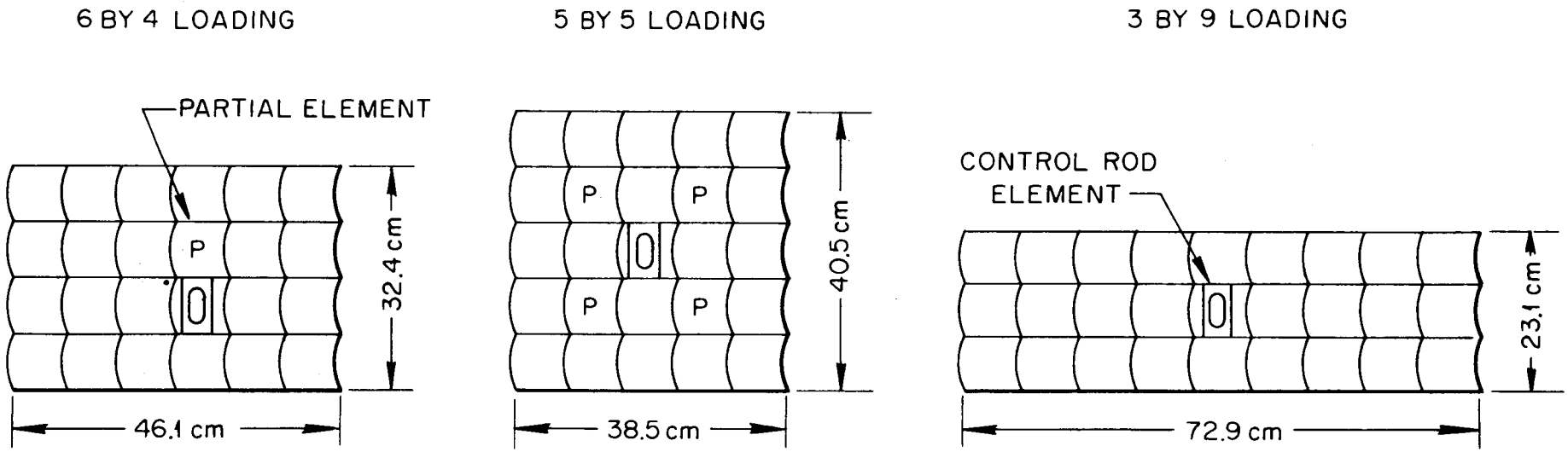

NOTE: ALL LOADINGS ARE 61.3 cm HIGH

Fig. 2. Experimental Critical Reactor Loadings.

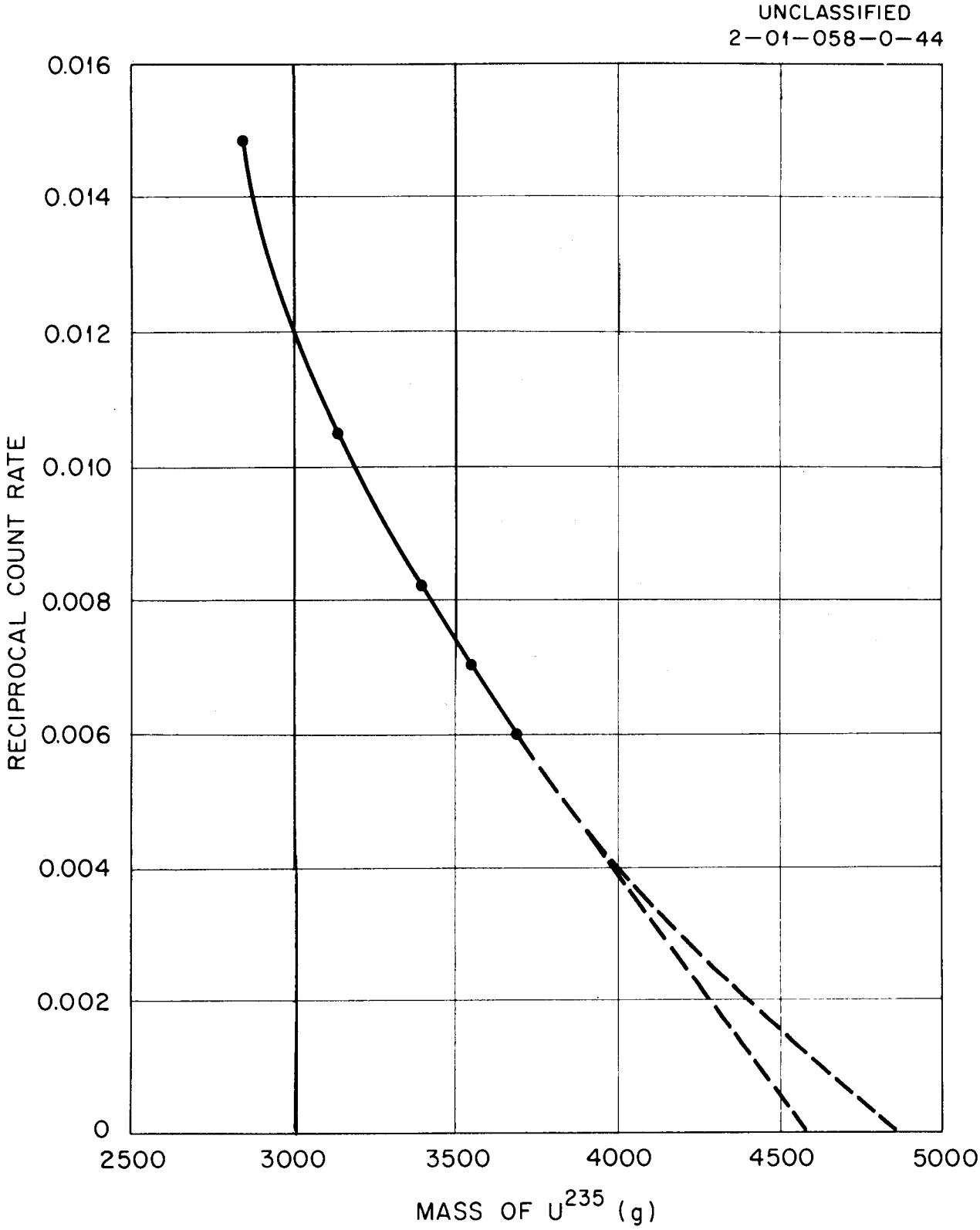

Fig. 3. Experimental Subcritical Multiplication Curve for the 3 by 9 Element BSR Loading.

Table 1. Experimental Critical Masses for Various Loadings of the BSR

	Critical Mass (g)	
Loading	Actual	Corrected
6 x 4	3242 ± 10	3239 ± 11
5 x 5	3246 ± 10	3189 ± 16
3 x 9	4600 to 4800	-

The temperature coefficient of the BSR had been measured in this temperature range and found to be $(6 \pm 0.5) \times 10^{-5}/^{\circ}C$. Using this datum with the calculated variation of multiplication with mass, a correction of $+8 \pm 1$ g was obtained for the experimental critical mass.

Another correction was required owing to the presence of the partial elements in the critical loadings. In the 5 by 5 loading there was 161 g less fuel than there would have been if all the elements had been full elements; in the 6 by 4 loading the difference was 26 g. Since adjoint fluxes were not available, the small perturbations in fuel density were weighted by the square of the flux, even though the perturbation theory which prescribes this method applies to a bare reactor. Figure 4 shows the flux and square of the flux (calculated as described in the next section) as a function of radius in the fuel-bearing region of an assumed three-region reactor with cylindrical geometry. Also shown is the volume-weighted average value of the square of the flux. If the partial elements are assumed to be concentrated at the points corresponding to their centers, i.e., 2/5 of the distance out from the center of the reactor to the edge, then a ratio of the local to average effectiveness of 1.40 is obtained. Therefore, the effective weight value of the missing fuel is $161 \text{ g} \times 1.40 = 226$ g and the correction is $161 \text{ g} - 226 \text{ g} = -(65 \pm 6)$ g for the 5 by 5 loading. Applying the same correction to the missing 26 g of fuel in the 6 by 4 reactor produces a correction of -10 ± 1 g.

The values of the experimental critical masses after the corrections for the temperature difference and the inhomogeneity were made are shown in the third column of Table 1.

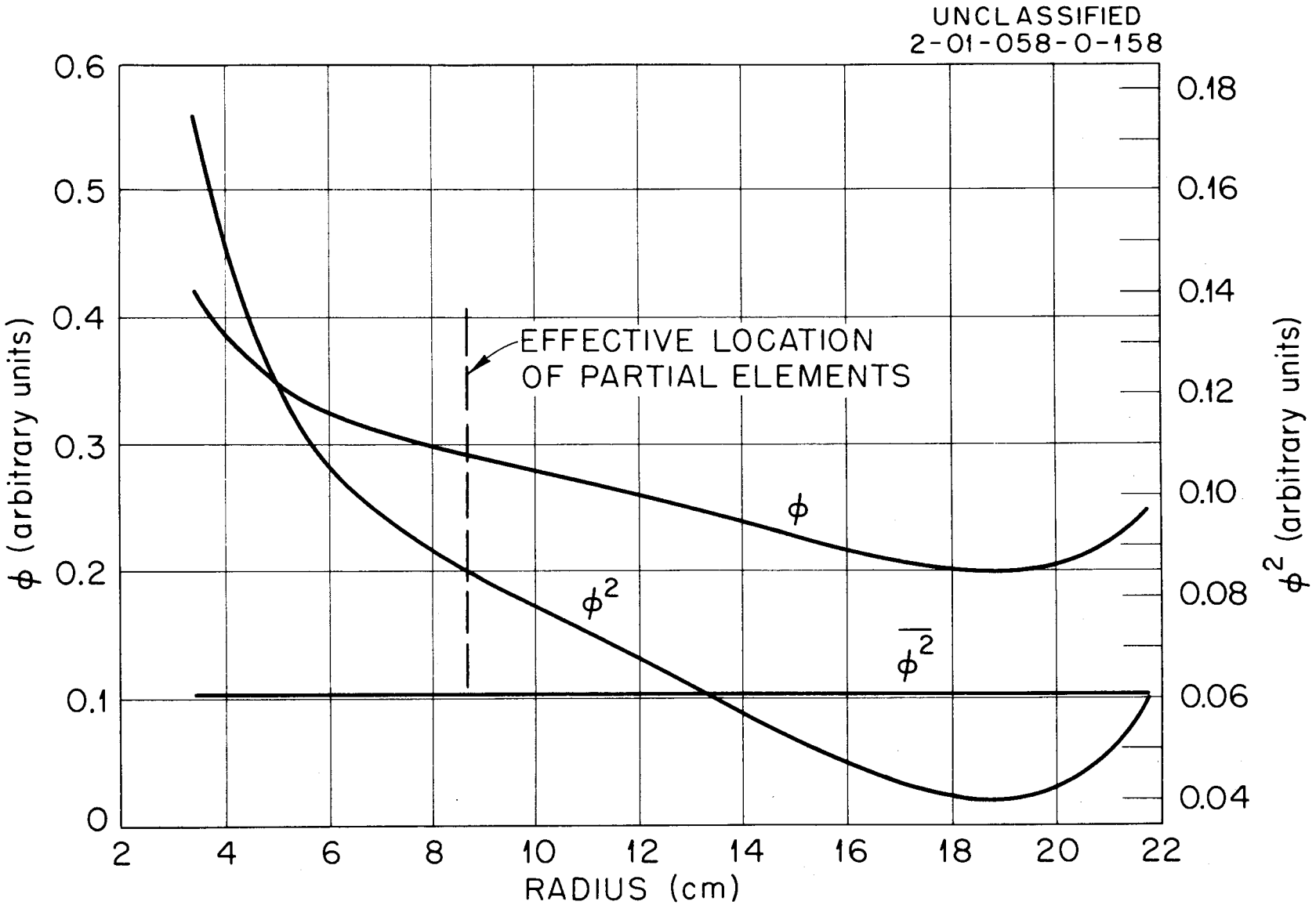

Fig. 4. Thermal Flux, ϕ, and Square of Flux, ϕ^2, in Fuel Region of Three-Region Cylindrical Reactor as a Function of the Reactor Radius.

II. THE CALCULATIONS

Geometric Considerations

The loadings used in the experiments were parallellepipeds completely surrounded by an effectively infinite water reflector. It is necessary to find configurations amenable to the calculation, which, with core compositions identical to that of the actual reactor, will have a multiplication equal to it.

The correspondence between solution-type experiments in cylindrical geometry and calculations using the Eyewash code[1] with an assumed spherical geometry was previously investigated by F. C. Prohammer.[3] Methods of equating the spheres and cylinders included: setting volumes equal; setting surface-to-volume ratios equal; setting bare bucklings equal; and setting bucklings equal, including reflector savings. Since the last-mentioned method gave by far the best correspondence this method was used to convert the parallellepipeds to the proper geometry for the calculations reported here.

If the parallellepiped has dimensions a, b, and c and the reflector savings equivalent to a thick water reflector is Δ, then the radius, R, of a sphere equivalent to the parallellepiped is given by

$$R = \frac{\pi}{B} - \Delta$$

where

$$B^2 = \text{buckling}$$

$$= \left(\frac{\pi}{a + 2\Delta}\right)^2 + \left(\frac{\pi}{b + 2\Delta}\right)^2 + \left(\frac{\pi}{c + 2\Delta}\right)^2 .$$

The value for Δ, the reflector savings, used in arriving at the calculated dimensions will be discussed in the next section.

For the case of transformation of a parallellepiped to a cylinder, a choice is required for two parameters, the radius, r, and the length, L.

In order to retain the best approximation, the longest of the three parallellepipedal dimensions, c, is set equal to the cylinder length (i.e., L = c). Then:

$$r = \frac{\nu_o}{K} - \Delta$$

where

$$K^2 = \left(\frac{\pi}{a + 2\Delta}\right)^2 + \left(\frac{\pi}{b + 2\Delta}\right)^2,$$

ν_o = first zero of the Bessel function.

The only remaining geometric question concerns the disposition to be made of the control-rod well which, though not containing any poison at criticality, nevertheless represents a region of low absorption with no fast source. Three methods of dealing with this problem were investigated.

(1) The entire core, including the control-rod well, was homogenized, leading to a two-region calculation.

(2) The volume fraction of the control-rod well was maintained equal in the two geometries:

$$V_c = \frac{v_c}{v_r} V_r$$

where

V_c = volume of the control-rod well in the configuration used for the calculation,

V_r = volume of the reactor core in the configuration used for the calculation,

v_c = volume of the control-rod well in the actual reactor,

v_r = volume of the actual reactor core.

(3) The volume fraction of the control-rod well was weighted by the calculated relative peak-to-average flux ratio in the calculated and experimental configurations.[4] This compensates for the increased effectiveness of a central control-rod well in a configuration where the flux is sharply peaked in the center. The flux shapes assumed for the calculation were the

fundamental mode shapes in a bare core with reflector savings. Using the quantities defined above, the equations become

$$V_c = 1.078 \frac{v_c}{v_r} V_r$$

for the calculations assuming a cylindrical geometry and

$$V_c = 1.216 \frac{v_c}{v_r} V_r$$

for the calculations assuming a spherical geometry.

Table 2 presents all the dimensions that were used in the calculations. The experimental dimensions are shown in Figs. 1 and 2.

In calculations of this type, the assumed water reflector thickness must, of course, be as thin as is consistent with the requirement that it be effectively infinite. In order to determine the effect of varying the thickness of the water reflector, calculations were performed for a 32-cm-dia spherical reactor having various reflector thicknesses. On the basis of the results, which are plotted in Fig. 5, a reflector thickness of 20 cm was chosen as a usable thickness that is equivalent to an infinitely thick water reflector.

Nuclear Considerations

Two codes were available for the calculations. One was the Eyewash code developed for the UNIVAC computer.[1] The other was the 3G3R code used for the Oracle computer.[4] In a few of the calculations using the 3G3R code an auxiliary code[5] which circumvents the one-dimensional character of the original code was also used. Each of these codes is described below.

The Eyewash Code

The Eyewash code is a 30-group code with which calculations are performed for spherical geometries with a maximum of nine spherical shell regions, each having a maximum of seven elements. It was applied to each

Table 2. Reactor Dimensions Used in Critical-Mass Calculations

Core Configuration	Control-Rod Well Equivalent Radius (cm) By Direct Volume Fraction Method	Control-Rod Well Equivalent Radius (cm) By Adjusted Volume Fraction Method	Core Radius (cm)	H_2O Reflector Thickness (cm)	Cylinder Height (cm)
		Cylindrical Reactor			
5 x 5	3.35	3.48	21.75	20	61.28
6 x 4	3.28	3.41	20.87	20	61.28
		Spherical Reactor			
3 x 9	6.48		23.14	20	
5 x 5	7.58	8.09	26.36	20	
6 x 4	7.52	8.02	25.79	20	

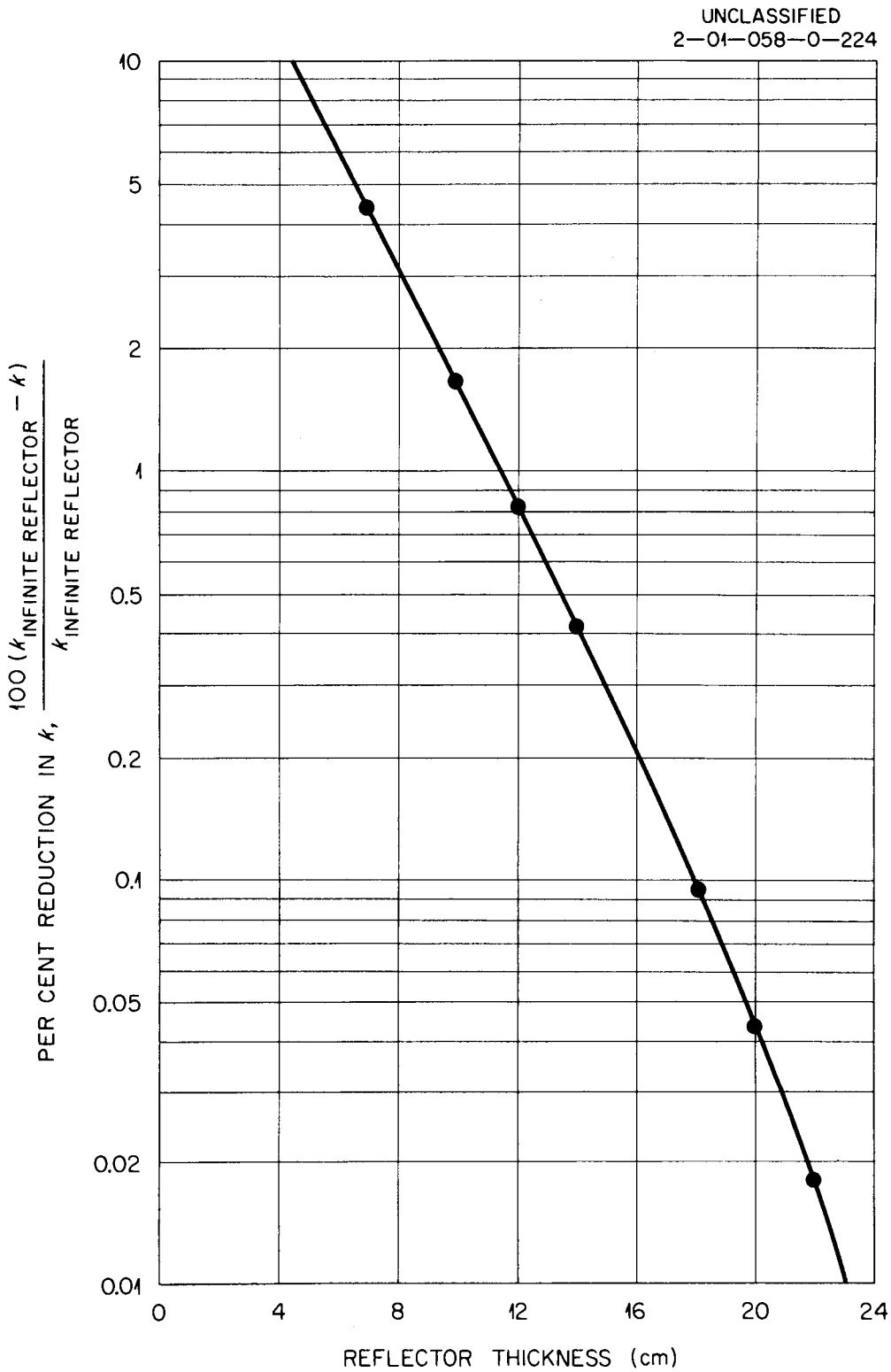

Fig. 5 Effect of the Water Reflector Thickness on the Calculated Reactivity of a Light-Water-Reflected Aqueous-Solution Reactor Having a 32-cm-dia Spherical Core.

configuration as a three-region code, taking explicit account of the control-rod well. The necessary nuclear parameters are included in the code. This code uses Goertzel-Selengut slowing-down for the hydrogenous moderator,[6] which properly accounts for the energy distribution of neutrons scattered from hydrogen, although the energy-angle correlation is omitted. The code considers water to consist of hydrogen and oxygen atoms; that is, it does not account for the binding effects of the water molecule. However, the transport of neutrons in these reactors occurs mostly as fast neutrons so that the effect is not large. The results of these calculations are included in Table 5 at the end of this paper.

The 3G3R Code

The so-called 3G3R (three-group, three-region) code[2] was used throughout as a two-group code, since good two-group constants were available. The following nuclear data were required as input information:

Σ_{a_f}, Σ_{a_s} = macroscopic absorption cross sections for fast and slow groups in each region,

$\nu\Sigma_{f_f}$, $\nu\Sigma_{f_s}$ = neutrons per fission times the macroscopic fission cross section for fast and slow groups in each region,

D_f, D_s = diffusion coefficients for fast and slow groups in each region,

τ = Fermi age to thermal,

Σ_{x_f}, Σ_{x_s} = macroscopic transfer cross sections for fast and slow groups in each region.

The macroscopic absorption cross sections for the slow group were obtained from data in BNL-325 (Ref. 7) adjusted to average over a Maxwellian distribution at a temperature corresponding to 2200 m/sec and multiplied by 1/1.017 to convert them to a temperature of 30°C, which was assumed to be the pool temperature when the critical experiments were performed. The U^{235} cross sections were further adjusted for non-1/v behavior, according to the curve in BNL-325. The values of these cross

sections were calculated under the assumption that the volume fractions of aluminum and water in both the core and the control-rod well were: aluminum, 0.423; H_2O, 0.577. The reflector was assumed to be pure water.

The macroscopic absorption cross sections for the fast group were set equal to zero; that is, it was assumed that all of the fast group neutrons were removed either by leakage or by transfer into the slow group. This assumption essentially neglects resonance absorption and thus would tend to give too large a multiplication constant. However, the macroscopic fission cross sections for the fast group were also set equal to zero so that this combination of assumptions corresponds to the assumption that $\epsilon p = 1.0$, where ϵ is the fast fission factor and p is the resonance escape probability.

The diffusion coefficient for the slow group in the reflector (water) was taken to be

$$D_{s_r} = \frac{1}{3\Sigma_{H_2O_{tr}}} = 0.160 \text{ cm}$$

where the value of the transport cross section, $\Sigma_{H_2O_{tr}} = 2.08 \text{ cm}^{-1}$, was taken to be that reported by McMurray.[8] The diffusion coefficient for the fast group in water, calculated from D(E) values weighted by the spectrum given by Brooks and Glick,[9] was taken from a paper by Webster.[10]

The diffusion coefficient for the fast group in the core is obtained in the same manner and from the same source as the diffusion coefficient for the fast group in the reflector.

The diffusion coefficient for the slow group in the core was also obtained from data reported by McMurray[8] and was calculated from the equation

$$D_{s_c} = \frac{1}{3\Sigma_i \left(\Sigma_{tr_i}\right)}$$

where Σ_{tr_i} is the transport cross section of the i-th component of the core and the contributions from the i components are summed. For this calculation the core is assumed to consist only of water and aluminum. The value of $\Sigma_{tr_{H_2O}}$ was again taken to be 2.08 cm^{-1}, and $\Sigma_{tr_{Al}}$ was taken to be 0.084 cm^{-1}. These values are for the pure substances and were weighted for the proper volume fractions in the core.

The macroscopic transfer cross sections for the slow group are zero. Those for the fast group were calculated by the equation

$$\Sigma_{x_f} = \frac{D_f}{\tau}$$

where τ is the Fermi age to thermal. The age to thermal in the core was given by McMurray[11] taken from curves presented by Dismuke and Arnette.[12] The age in pure water was reported by Glasstone.[13]

Table 3 gives a summary of the nuclear parameters used in the 3G3R calculations.

When cylindrical geometry was assumed in the calculations with the 3G3R code the finiteness of the cylinder was taken into account by a buckling for each energy group in the axial direction, which forms part of the input to the code. This buckling must take into consideration the height of the core and the effect of the reflector capping the ends of the cylinder. Two methods were tested. In the first method the axial buckling for the fast and slow groups was assumed to be equal and was calculated as follows:

$$B = \frac{\pi}{h + 2\Delta},$$

where

h = height of reactor,

$\Delta = (D_{f_c}/D_{f_r})M_r$,

D_{f_c} = diffusion coefficient for the fast group in the core,

Table 3. Nuclear Parameters Used in Critical-Mass Calculations with 3G3R Code

Region	Absorption Cross Section (cm^{-1})		Diffusion Coefficient (cm)		Fermi Age $\tau(cm^2)$	Transfer Cross Section (cm^{-1})	
	Fast, Σ_{a_f}	Thermal, Σ_{a_s}	Fast, D_f	Thermal, D_s		Fast, Σ_{x_f}	Thermal, Σ_{x_s}
Control-rod well	0.0	0.01619	1.31	0.269	64.0	0.02062	0.0
Core	0.0	$0.01619 + \Sigma_{a_s}^{25}$	1.31	0.269	64.0	0.02062	0.0
Reflector	0.0	0.01916	1.19	0.160	33.0	0.0363	0.0

D_{f_r} = diffusion coefficient for the fast group in the reflector,

M_r = migration length in the reflector.

In the second method the axial bucklings for the fast and slow groups were calculated separately as follows:

$$B_{fast} = \frac{\pi}{h + 2\Delta_f},$$

where

$\Delta_f = (D_{f_c}/D_{f_r})L_{f_r}$,

L_{f_r} = fast-group diffusion length in the reflector

$= \sqrt{D_{f_r}/\Sigma_{x_f}} \equiv \sqrt{\tau}$

x_f = fast-group transfer cross section in the reflector;

$$B_{slow} = \frac{\pi}{h + 2\Delta_s},$$

where

$\Delta_s = (D_{s_c}/D_{s_r})L_{s_r}$,

D_{s_c}, D_{s_r} = slow-group diffusion coefficients in the core and reflector,

L_{s_r} = slow-group diffusion lengths in the reflector.

The first method, which will henceforth be called the "migration length assumption," was suggested by Bogart and Valerino.[14] The second method will be referred to as the "diffusion length assumption." The thermal-group reflector savings used in this calculation was also applied in the geometric transformations described above. Its value is 4.86 cm.

In order to check the applicability of the 3G3R code as a two-group code, calculations were performed for comparison with experimental reactors which were spherical in shape and therefore did not require that geometric

cy. 4

ORNL-2499 Erratum

On p. 21, line 23, the equation for B^2 should be written as follows:

$$B^2 = \frac{M^2}{2\tau L^2} + \frac{\sqrt{M^4 + 4\tau L^2\left(\frac{k_\infty}{k} - 1\right)}}{2\tau L^2}$$

transformations be made for the calculations. The experimental reactors were five spherical, water-reflected solution-type critical experiments[15] for which calculations previously were performed by the Eyewash code, as well as by an earlier 30-group code known as Medusa, which does not include Geortzel-Selengut slowing down. The results of the several calculations are given in Table 4.

The Modified 3G3R Code

A few calculations were performed by means of an auxiliary code to the 3G3R code proposed by M. L. Nelson[5] which circumvents the one-dimensional character of the original code. In these calculations it was assumed that the reactor was a completely reflected cylinder. First, a one-dimensional radial calculation was performed, using a first guess for the axial buckling. A value of k, the multiplication constant, was thus obtained. An equivalent bare buckling in the radial direction was then obtained as follows:

$$k = \frac{k_\infty}{(1 + \tau B^2)(1 + L^2 B^2)}$$

where

k_∞ = infinite medium multiplication constant in the core,
B^2 = buckling,
L = diffusion length for the thermal group in the core,
τ = age to thermal in the core.

Solving this for B^2 gives:

$$B^2 = \frac{M^2}{2\tau L^2} + \frac{\sqrt{M^4 + 4\tau L^2\left(\frac{k_\infty}{k} - 1\right)}}{2\tau L^2}$$

where

M^2 = migration area in the core,
= $L^2 + \tau$.

Table 4. Comparison of Values of the Multiplication Constant k Calculated by Various Methods

Reactor Radius (cm)	Reactor Temperature (°C)	k			
		Experimental	Medusa	Eyewash	3G3R
13.2	27.5	1.000	1.130	0.992	0.970
13.2	39.5	1.000	1.133	0.992	0.974
13.2	74.0	1.000	1.148	1.007	0.986
13.2	85.5	1.000	1.152	1.001	0.991
16.0	54.0	1.000	--	1.010	0.982

Expanding the square root in series and retaining third-order terms in $1 - \frac{k_\infty}{k}$ gives:

$$B^2 = \frac{\left(\frac{k_\infty}{k} - 1\right)}{M^2}\left[1 - \frac{L^2\tau}{M^4}\left(\frac{k_\infty}{k} - 1\right) + 2\left(\frac{L^2\tau}{M^4}\right)^2\left(\frac{k_\infty}{k} - 1\right)^2\right]$$

This last equation was used by the code to calculate an equivalent bare radial buckling. This buckling was then used as input datum for a slab calculation in the axial direction, and the k so calculated was used in the same way to calculate an equivalent bare buckling in the axial direction. This process was then iterated until the k values calculated in the two directions agreed to within predetermined errors. The bucklings so calculated were used as input to the code for both the fast and the thermal groups.

This method also is applicable to a parallellepipedal reactor directly. In this case calculations are made in slab geometry in each of the three directions in cyclic order, and the sum of the bucklings in the other two directions is used as input datum at each stage. The iteration proceeds in cyclic rotation until all three directions give the same k value. This method has been used on the configurations of interest in this report in three ways: (1) as two-region cylinders, i.e., with homogenized core, (2) as three-region cylinders in the radial direction, with homogenized core in the axial direction, and (3) as homogenized parallellepipeds.

III. EXAMINATION OF RESULTS

Table 5 presents the critical masses calculated by each method and also the percent difference between the calculated and measured critical masses. A cursory examination of this table shows that the best methods yielded results within about 1.0% of the experimental critical mass. It must be remembered that the critical masses were calculated by assuming three different masses and calculating the multiplication for each. The three mass values chosen were 3400 g, 3100 g, and 2700 g, and the critical mass was obtained by graphical interpolation. It is difficult to assess the magnitude of the error associated with the input parameters and the effect each would have on the critical mass; therefore, it is impossible to give an error with any precision. It is, however, reasonable to suppose that the uncertainty is of the order of 2% in mass. This uncertainty is relative to the experiment and does not apply to relative variations between the calculations which use the same parameters.

An examination of the results shows the following concerning the 3G3R results only: (1) The calculations for a spherical geometry yield results about 5 or 6% higher in critical mass than those for a cylindrical geometry. (2) Homogenizing the core leads to results that are too low by about 3 to 4% when compared with the three-region calculations. (3) As would be expected, the two-region sphere calculations yield deceptively good agreement due to the partial cancelling of 1 and 2. (4) The diffusion length assumption appears to give results about 2% lower than the migration length assumption, and the former is the better approximation. (5) As would be expected, the calculations for a two-region cylinder using the migration length method for axial bucklings give deceptively close agreement due to the partial cancelling of the errors associated with the two-region calculations and the migration length assumption. (6) The effect of the adjustment in the control-rod volume ratio to weight by the flux shape is not large enough to indicate clearly the better method, but the adjusted value seems to be somewhat better.

It can be concluded that the best approximation with the 3G3R code is the three-region cylinder with axial buckling calculated by the diffusion length method and with an adjusted control-rod volume ratio.

Table 5. Comparison of Calculated Critical Masses with BSR Experiments

Assumed Calculation Geometry	Number of Regions	Control-Rod Volume Ratio Assumption	Axial Buckling Assumption[a]	Calculation Method[b]	5 by 5 Loading: Calculated Critical Mass (g)	5 by 5 Loading: Difference From Experiment (%)	6 by 4 Loading: Calculated Critical Mass (g)	6 by 4 Loading: Difference From Experiment (%)
Sphere	2			3G3R	3164	-0.8	3183	-1.7
	3	Direct		Eyewash	3269	+2.5	3264	+0.8
	3	Direct		3G3R	3384	+6.2	3418	+6.1
	3	Adjusted		3G3R	3442	+7.9	3480	+8.2
Cylinder	2		L	3G3R	3078	-3.5	3151	-2.7
	2		M	3G3R	3162	-0.8	3227	-0.4
	2			Mod. 3G3R	3094	-3.0	3155	-2.6
	3	Direct	L	3G3R	3177	-0.4	3269	+0.9
	3	Direct	M	3G3R	3250	+1.9	3343	+3.2
	3	Adjusted	L	3G3R	3182	-0.2	3266	+0.8
	3	Adjusted	M	3G3R	3261	+2.2	3356	+3.6
	3	Direct		Mod. 3G3R	3135	-1.7	3253	+0.4
Parallelepiped	2			Mod. 3G3R	3048	-4.6	3082	-4.8

a. L designates the "diffusion length method" of calculating the axial buckling in the one-dimensional cylinder calculations; M designates the "migration length method" of calculating the axial buckling in the one-dimensional cylinder calculations.

b. 3G3R is the three-group, three-region ORACLE code used as two-group code; Mod. 3G3R is the iterative method proposed by M. L. Nelson for use with the 3G3R code for calculations in several dimensions.

Indeed, these two calculations agree with the experiment within less than 1% in critical mass, which corresponds, according to the slope of the curve of multiplication vs mass, to about 0.25% in multiplication.

The modified 3G3R method gives results which are slightly lower in mass than those using the diffusion length assumption, but the difference is not sufficiently clear cut to determine the better method. Therefore, the five- to eight-fold increase in computing time needed with the modified method does not appear justified. The parallellepipedal configuration in the two-region approximation shows the error of about -4% which is associated with the two-region approximation and was displayed in all the two-region calculations.

REFERENCES

1. J. H. Alexander and N. D. Given, "A Machine Multigroup Calculation. The Eyewash Program for Univac," ORNL-1925 (1955).

2. R. R. Bate, L. T. Einstein, and W. E. Kinney, "Description and Operating Manual for the 3-Group, 3-Region, Reactor Code for ORACLE," ORNL-CF-55-1-76 (Jan. 13, 1955).

3. F. G. Prohammer, "A Comparison of One-Dimensional Critical Mass Computations with Experiments for Completely Reflected Reactors," ORNL-2007 (Mar. 1, 1957).

4. This method was suggested by A. Simon of Oak Ridge National Laboratory.

5. M. L. Nelson, Appl. Nuclear Phys. Ann. Rep. Sept. 10, 1956, ORNL-2081, p. 115.

6. G. Goertzel, "Criticality of Hydrogen Moderated Reactors," TAB-53 (July 25, 1950); D. Selengut, private communication to G. Goertzel.

7. D. J. Hughes and J. A. Harvey, "Neutron Cross Sections," BNL-325 (July 1, 1955).

8. H. L. McMurry, "Nuclear Constants for the MTR as a Function of Fuel Content, Poison Content, and Al/H_2O Ratio," IDO-16127 (Oct. 23, 1953).

9. F. C. Brooks and H. L. Glick, WAPD-45 (Nov., 1951) (classified).

10. J. W. Webster, "Reactivity Effect of Reducing the Al/H_2O Ratio in the MTR Core," IDO-16133 (Oct. 26, 1952).

11. H. L. McMurry, "Calculated Reactivity Changes Due to Reductions of Aluminum in the MTR Core," IDO-16083 (Mar. 16, 1953).

12. N. M. Dismuke and M. R. Arnette, "Age to Thermal Energy (.025 e.v.) of Fission Neutrons in H_2O-Al Mixture," MonP-219 (Dec. 5, 1946).

13. S. Glasstone, Principles of Nuclear Reactor Engineering, D. Van Nostrand Company, Inc., New York (1955).

14. D. Bogart and M. F. Valerino, Reactor Sci. Tech. 4, No. 3, pp. 107-114 (1954).

15. C. K. Beck et al., "Critical Mass Studies. Part III," K-343 (April 19, 1949) (classified).

ACKNOWLEDGMENT

The critical experiments described in this report were carried out by K. M. Henry and E. B. Johnson.

The "Modified 3G3R Calculations" were programmed and run by L. Nelson.

The assistance of W. E. Kinney and M. E. LaVerne in setting up the 3G3R and Eyewash calculations, respectively, is also gratefully acknowledged.

ORNL-2499
Physics and Mathematics
TID-4500 (13th ed., Rev.)
February 15, 1958

INTERNAL DISTRIBUTION

1. C. E. Center
2. Biology Library
3. Health Physics Library
4-5. Central Research Library
6. Reactor Experimental Engineering Library
7-26. Laboratory Records Department
27. Laboratory Records, ORNL R.C.
28. A. M. Weinberg
29. L. B. Emlet (K-25)
30. J. P. Murray (Y-12)
31. J. A. Swartout
32. E. H. Taylor
33. E. D. Shipley
34. A. H. Snell
35. E. P. Blizard
36. M. L. Nelson
37. W. H. Jordan
38. G. E. Boyd
39. R. A. Charpie
40. S. C. Lind
41. F. L. Culler
42. A. Hollaender
43. J. H. Frye, Jr.
44. M. T. Kelley
45. J. L. Fowler
46. R. S. Livingston
47. K. Z. Morgan
48. T. A. Lincoln
49. A. S. Householder
50. C. P. Keim
51. C. S. Harrill
52. C. E. Winters
53. D. S. Billington
54. D. W. Cardwell
55. D. Phillips
56. A. J. Miller
57. M. J. Skinner
58. R. R. Dickison
59. J. A. Harvey
60. A. Simon
61-70. F. C. Maienschein
71. C. E. Clifford
72. A. D. Callihan
73. R. R. Coveyou
74. W. Zobel
75. F. L. Keller
76. C. D. Zerby
77. D. K. Trubey
78. S. K. Penney
79. R. W. Peelle
80. E. Silver
81. K. M. Henry
82. E. B. Johnson
83. W. E. Kinney
84. M. E. LaVerne
85. G. deSaussure
86. J. D. Kington
87. F. J. Muckenthaler
88. V. R. Cain
89. A. B. Reynolds
90. C. A. Preskitt
91. ORNL - Y-12 Technical Library, Document Reference Section
92. F. L. Friedman (consultant)
93. H. Goldstein (consultant)
94. H. Hurwitz, Jr. (consultant)
95. L. W. Nordheim (consultant)
96. R. R. Wilson (consultant)

EXTERNAL DISTRIBUTION

97. Division of Research and Development, AEC, ORO
98-701. Given distribution as shown in TID-4500 (13th ed., Rev., Feb. 15, 1958) under Physics and Mathematics category (75 copies - OTS)