MARTIN MARIETTA ENERGY SYSTEMS LIBRARIES
3 4456 0361254 3

CENTRAL RESEARCH LIBRARY
DOCUMENT COLLECTION

[redacted]

AEC RESEARCH AND DEVELOPMENT REPORT

ORNL-2513
C-84 – Reactors-Special Features of Aircraft Reactors

cy. 87 A

AEC RESEARCH AND DEVELOPMENT [redacted]

DECLASSIFIED
CLASSIFICATION CHANGED TO
BY AUTHORITY OF: DOE 5.7.70
E. Goldberg 12.8.70

ASSEMBLY PROCEDURE FOR THE ETU AND ART REACTORS

R. Cordova
W. C. Tunnell
W. E. Thomas
G. D. Whitman

CENTRAL RESEARCH LIBRARY
DOCUMENT COLLECTION
LIBRARY LOAN COPY
DO NOT TRANSFER TO ANOTHER PERSON
If you wish someone else to see this document, send in name with document and the library will arrange a loan.

OAK RIDGE NATIONAL LABORATORY
operated by
UNION CARBIDE CORPORATION
for the
U.S. ATOMIC ENERGY COMMISSION

[redacted]

LEGAL NOTICE

This report was prepared as an account of Government sponsored work. Neither the United States, nor the Commission, nor any person acting on behalf of the Commission:

A. Makes any warranty or representation, express or implied, with respect to the accuracy, completeness, or usefulness of the information contained in this report, or that the use of any information, apparatus, method, or process disclosed in this report may not infringe privately owned rights; or

B. Assumes any liabilities with respect to the use of, or for damages resulting from the use of any information, apparatus, method, or process disclosed in this report.

As used in the above, "person acting on behalf of the Commission" includes any employee or contractor of the Commission to the extent that such employee or contractor prepares, handles or distributes, or provides access to, any information pursuant to his employment or contract with the Commission.

[redacted]

ORNL-2513
C-84 – Reactors-Special Features
of Aircraft Reactors
M-3679 (21st ed.)

This document consists of 58 pages.

Copy 97 of 223 copies. Series A.

Contract No. W-7405-eng-26

REACTOR PROJECTS DIVISION

ASSEMBLY PROCEDURE FOR THE ETU AND ART REACTORS

R. Cordova, W. E. Thomas,
W. C. Tunnell, and G. D. Whitman

DATE ISSUED

SEP 25 1958

OAK RIDGE NATIONAL LABORATORY
Oak Ridge, Tennessee
operated by
UNION CARBIDE CORPORATION
for the
U.S. ATOMIC ENERGY COMMISSION

[redacted]

MARTIN MARIETTA ENERGY SYSTEMS LIBRARIES
3 4456 0361254 3

[redacted]

[redacted]

[redacted]

[redacted]

CONTENTS

Introduction 1

Reflector Assembly 2

- Shell II 2
- Fitting of Beryllium to Shell II 2
- Installation of Top Reflector Neutron Shielding 7
- Strut Load Ring–Shell III Upper Subassembly 10
- Shell III Lower 10
- Installation of Shell III Neutron Shielding and Shell IV 14

Installation of Main Heat Exchangers 17

North Head 20

Shell VII Upper–Sodium Pump Barrels 24

Island–South Liner Assembly 26

- Island 26
- South Liner 28
- Attachment of Island to South Liner 29
- Installation of Island–South Liner 31

Filler Plates 33

Shell VII Lower 34

Vertical Alignment of Island 37

Preoperational Tests 40

Detailed Parts List 42

[redacted]

ASSEMBLY PROCEDURE FOR THE ETU AND ART REACTORS

R. Cordova W. E. Thomas W. C. Tunnell G. D. Whitman

INTRODUCTION

The construction of an ART circulating-fuel reflector-moderator type of reactor has been referred to as "an attempt to build a large onion," consisting of several complex heterogeneous spherical laminates and surfaces of revolution. This reactor is assembled in a controlled atmosphere maintained at room temperature, while actual operating conditions require temperatures as high as 1600°F in certain passages and limit others to approximately 1200°F. Because of resultant high thermal stresses and high relative expansion, it is necessary that close adherence to the calculated clearances be maintained and, furthermore, that methods be established for checking these clearances after an assembly.

The sequence of reactor construction can be outlined as follows:

1. Individual parts are fabricated. Some are final-machined to drawing tolerances; others have additional stock left for machining after a welding operation.
2. A subassembly is formed by welding or combining a group of parts. The subassemblies are stress-relieved and machined to drawing tolerances, with sufficient stock allowed in the weld regions for future welding.
3. Subassemblies are combined with other subassemblies or parts to form assemblies. These assemblies consist of the following: reflector, main heat exchangers, north head, island–south liner, shell VII upper–sodium pump barrels, filler plates, and shell VII lower section.
4. Assemblies are combined to make the reactor (final assembly).

The above outline is useful both from an economic and a construction standpoint. Any necessary design changes may be made prior to final assembly without incurring a total loss. Of course, the cost and the time delay are directly proportional to the size, complexity, and accessibility of the part in question. Other advantages of subassemblies and of some assemblies are that they may be stress-relieved and then final-machined to tolerance, that they are accessible for metallurgical evaluation of both welds and workmanship, and that they can be checked dimensionally.

The design of the reactor is such that if dimensions are not accurately known, excessive time may be required at final assembly for detailed checking and fitting, and for filing, grinding, or remachining before interferences are located or clearances are acceptable. Adequate and sufficiently accurate jigs, fixtures, and gages must be provided for fabrication and inspection.

Once final assembly or certain phases of the assembly have begun, it is no longer possible to regain tolerances by machining. Therefore it is necessary that simulated weld tests be conducted[1] and that each weldment be studied with respect to shrinkage.

As a second check on metallurgical evaluation of the numerous welds, particularly those where radiography is either inconclusive or cannot be performed satisfactorily, a vacuum test is performed. Certain regions, such as that between shells III and IV and that between shells V and VI, can be easily helium-leak-tested after assembly.

Throughout the assembly of the reactor special consideration must be given to cleanliness. All reactor parts should be free from oxides, scales, stains, oils, greases, and foreign matter. Oxides, scales, and stains can be removed by one of the following methods:

1. hydrogen (bright) annealing (heating at 1850°F for 30 min in an atmosphere of hydrogen),
2. pickling,
3. machining,
4. grinding or filing,
5. brushing (with stainless steel brushes only).

Obviously, the first three methods are applicable only to parts and subassemblies. Oils and greases are removed by an approved solvent such as trichloroethylene. After degreasing, the vapors can be effectively removed by putting the part under vacuum in the low micron range. Foreign matter such as chips, filings, and grinding dust can easily be removed by wiping or vacuuming.

Because of the health hazards associated with the welding of core shells adjacent to enclosed

---

[1] C. K. McGlothlan, *Welding Studies on Inconel for ETU and ART Reactors*, ORNL 57-12-134 (Dec. 11, 1957).

beryllium pressings, the following procedure is necessary:

1. Respiratory protective equipment is worn during the closure welding. After the first closure weld is made, respiratory equipment may be removed.
2. The Army combat mask or the MSA fresh-air-adapted Gasfoe respirator is used.
3. The purge gas is vented to the room atmosphere.
4. Personnel actually welding and helping are required to have prior approval from the medical department.

The following discussion, with illustrative sketches and photographs, describes a method by which the reactor components can be assembled to form a completed unit.

REFLECTOR ASSEMBLY

Shell II

The shell II upper section with collar (D-4213 and D-4214) and the shell II lower section (D-4212) are forged from $\frac{3}{4}$-in. inspected Inconel plate. After the parts are machined to a wall thickness of $\frac{1}{2}$ in., they are inspected radiographically, all rejected areas are ground out and repaired, and the parts are then stress-relieved in an atmosphere of hydrogen at a temperature of 1850°F for 30 min. The parts are now machined to a wall thickness of 0.125 ± 0.006 in. The surface finishes of the parts are 63 rms inside and 125 rms outside. Approximately $\frac{1}{4}$ in. of stock is left on each end of the shell segments for trimming and weld preparation. The parts are then given visual and dye-penetrant inspections and a complete dimensional check. Radial dimensions and wall thickness are checked at each 1-in. station. The trimming fixture is inserted (see Fig. 1) into the shell II lower and chucked in a lathe, and the equatorial weld groove is machined, allowing 0.030 in. of stock for weld shrinkage. The above procedure is repeated for the shell II upper.

After completion of the equatorial weld prepation, the parts are again set up between centers, the equatorial joints are butted, the tacking belt is installed (see Figs. 2 and 3), and the two shell segments are tack-welded. The tacking belt is then removed, concentricity is checked, and if it is acceptable, the joint is welded. After welding, the concentricity is checked at latitude increments of 1 in. A concentricity runout of

Fig. 1. Shell II Welding and Trimming Fixture.

0.005 in. TIR or greater is cause for rejection of this subassembly. Finally, the weldment is given a metallurgical evaluation (visual, dye-penetrant and x ray).

The shell is then trimmed to the proper length, and the ends are squared with the center line. An allowance of 0.033 in. is left on the shell II lower weld groove for shrinkage.

Fitting of Beryllium to Shell II

The lower beryllium reflector half, F-4225 (shown at right in Fig. 4), is given a complete dimensional inspection, and the data are correlated with those of the shell II lower to determine the appropriate sizes of the spacers. The bushings, B-4307, are then driven into the drilled holes on the inside surface of the beryllium. Next, the spacers are sized and contoured (see Fig. 5) to give a shell-to-spacer clearance of 0.010 ± 0.002 in. The spacers are installed, and the height of each spacer is checked. It may be necessary to hand-shape some spacers in order to obtain the required tolerance. By using the shell II expanding mandrel lifting fixture, E-4142, the shell is set inside the lower beryllium reflector (see Fig. 6), and a check is made for spacer interference. In order to position the shell II

[redacted]

ORNL-LR-DWG 24924

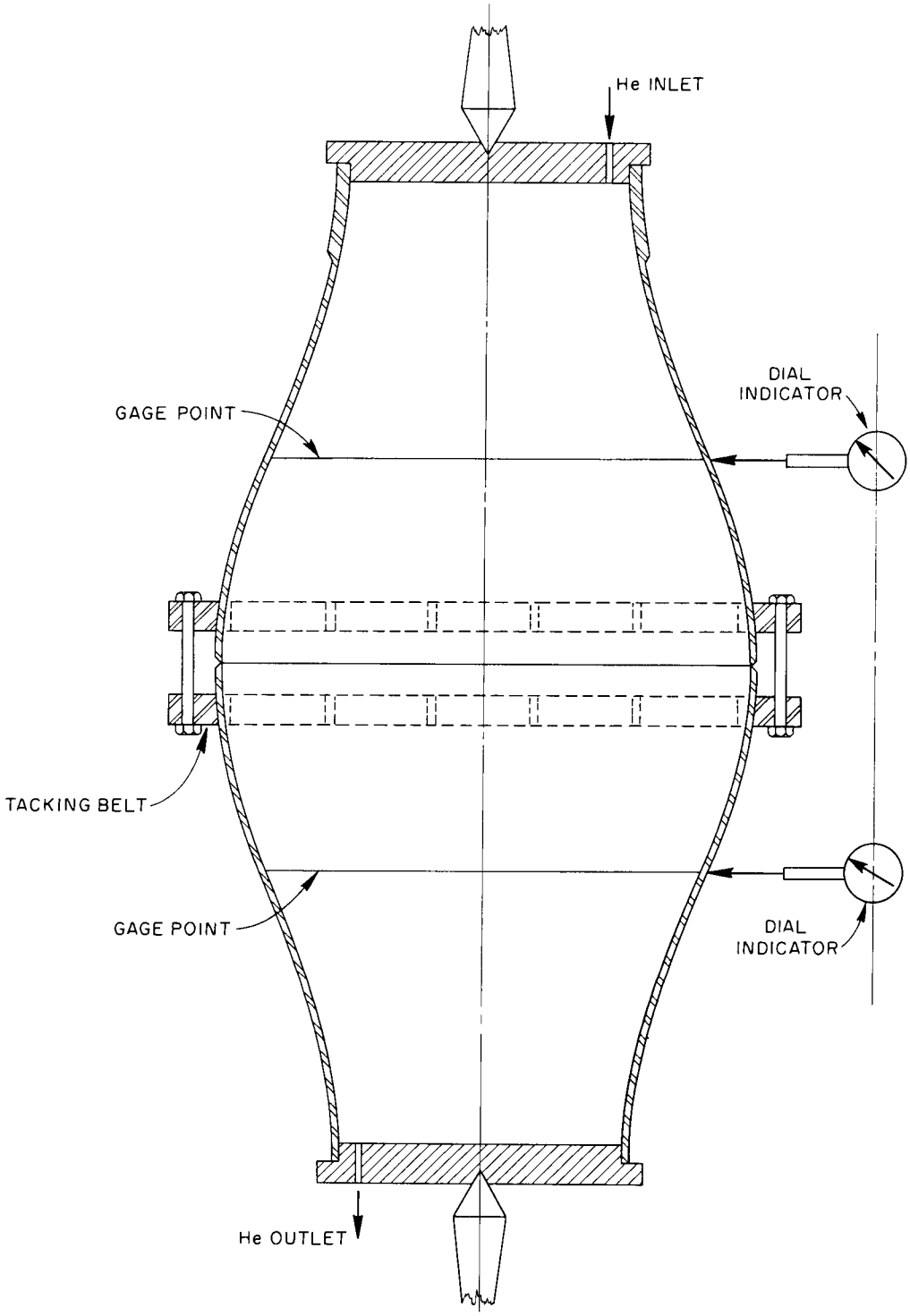

Fig. 2. Shell II Equatorial Weldment.

Fig. 3. Shell II Assembly with Tacking Belt.

equator in the plane of the equator of the lower reflector, vertical measurements are taken from the parting plane of the beryllium to the gage points on the shell II upper. The upper beryllium half (see Fig. 7) and shell II are now inverted, and dimensions are correlated, bushings are driven in, and spacers are fitted according to the procedure mentioned above. In this case the vertical measurements are taken from the upper beryllium parting plane to the gage points on the shell II lower. It is important that all bluing around the gage marks be removed before the next step is undertaken.

The beryllium index pin, part B-4228, is inserted into the lower beryllium hemisphere. Then shell II is repositioned in the lower beryllium half, and by use of the handling bail, E-4142, the upper beryllium half is lowered over the subassembly (see Fig. 8). In order to obtain the total travel of the shell it is first elevated until contact is made between the shell II upper and the spacers, and then lowered until contact is made between the shell II lower and the spacers. By use of the above data the perpendicular distance is computed from a tangent at the point of greatest slope on the shell. The distance should be 0.010 ± 0.002 in. If it is not, the two beryllium

Fig. 4. Beryllium Reflector Halves with Clamps.

[redacted]

[redacted]

ORNL-LR-DWG 24925

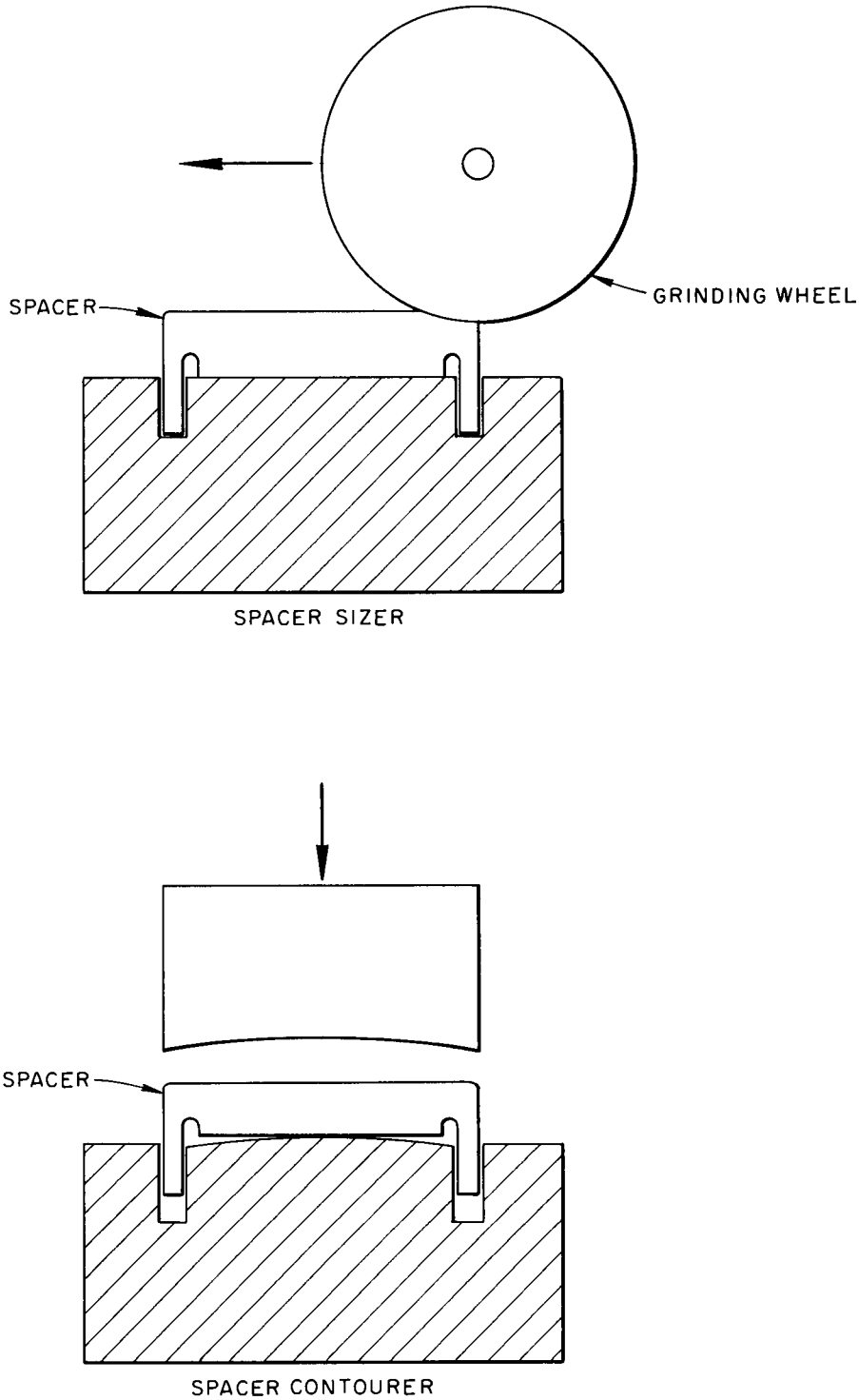

Fig. 5. Spacer Preparation.

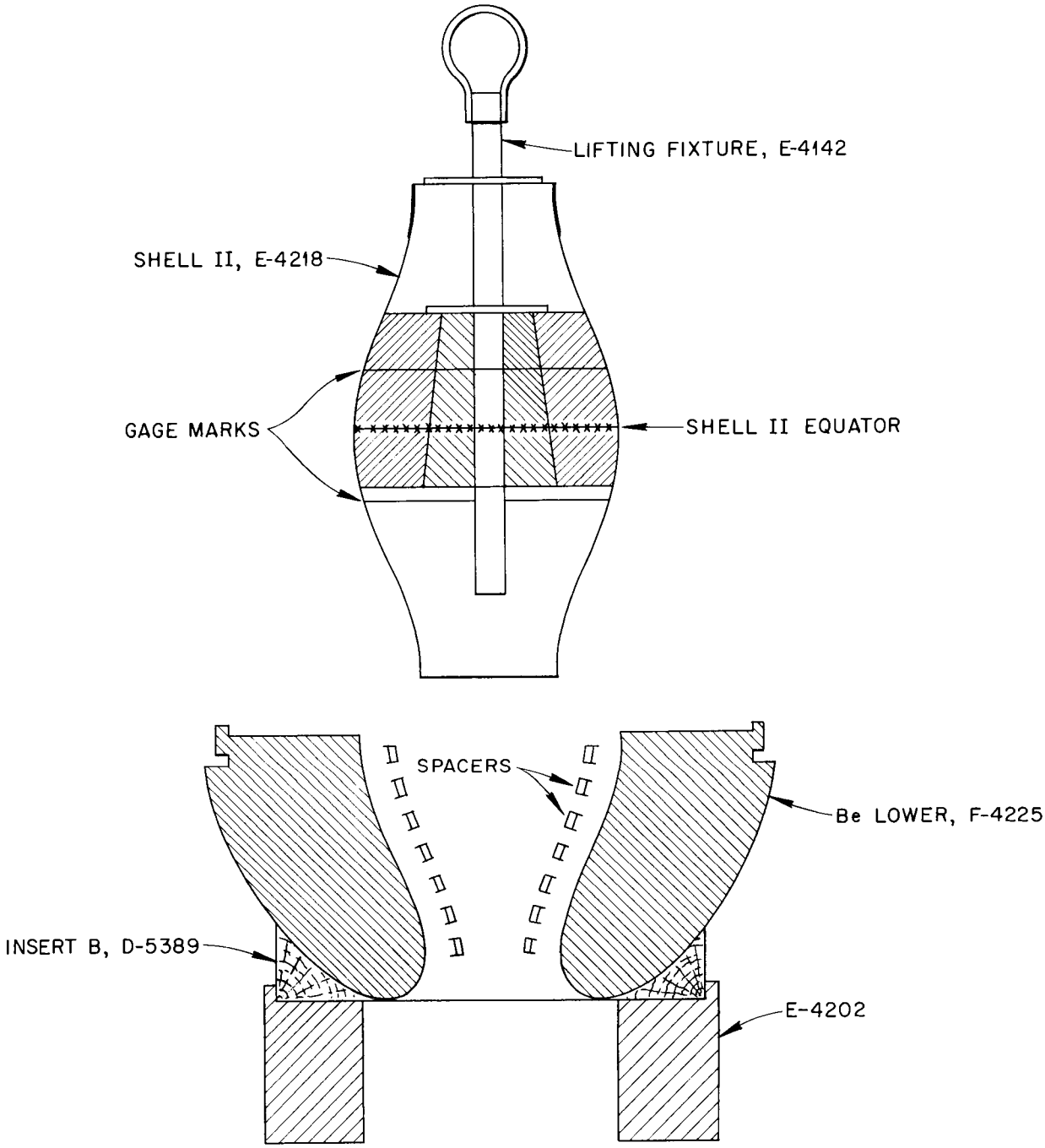

Fig. 6. Shell II Positioning Operation.

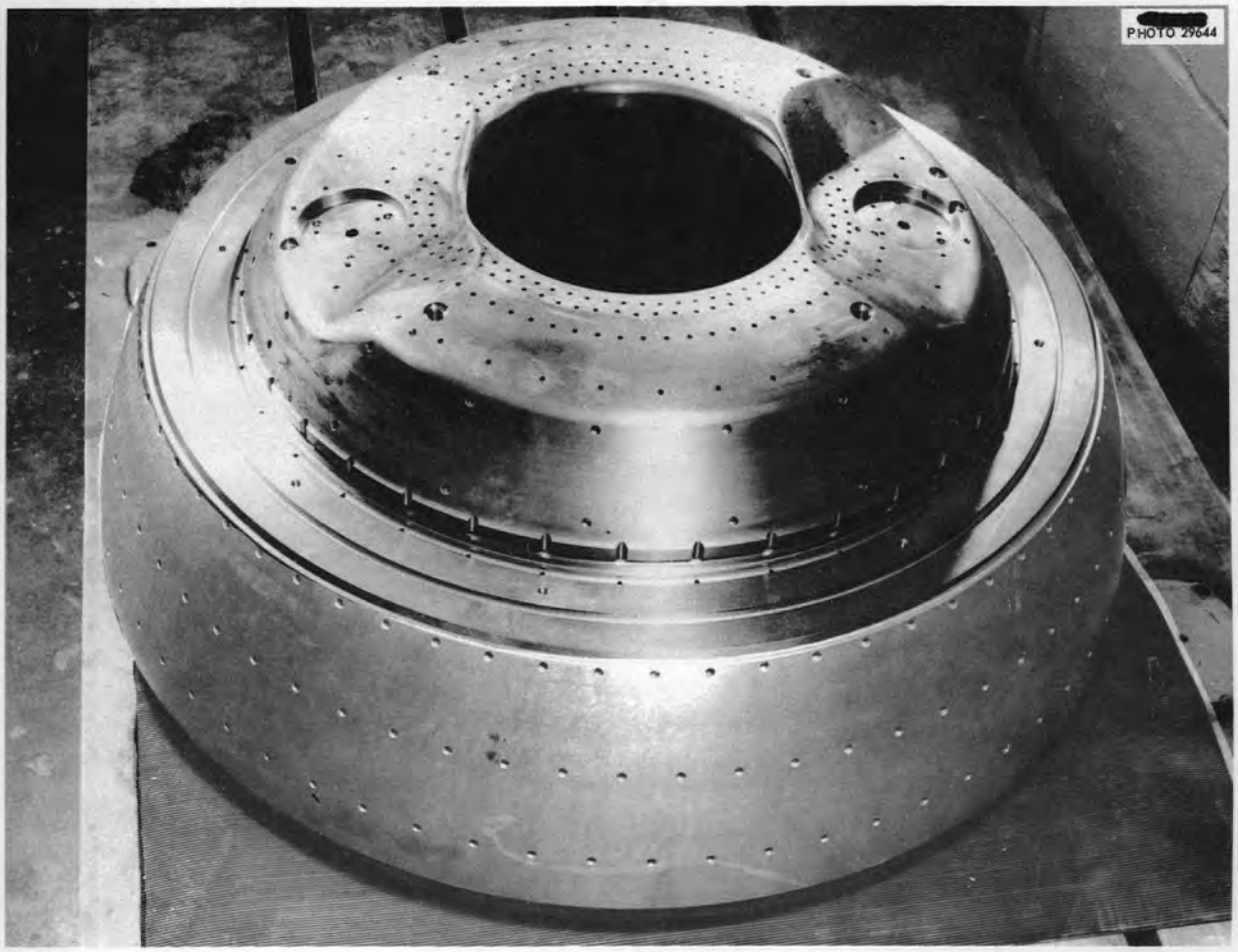

Fig. 7. Upper Beryllium Hemisphere.

halves are probably not properly seated. If the value is acceptable, the beryllium "clamps," E-4230, are installed, with special attention being paid to proper fit, so that approximately equal load will be carried by each clamp segment when the subassembly is lifted. There should be no attempt to force-fit the clamp into place. The variation in clearance between clamp and lips of the reflector should be less than 0.002 in. This spacing may be accomplished by insertion of Inconel shim stock between the lips and the clamp. The assembled parts are lifted, and the lower beryllium half is rested on insert *B*, on fixture E-4204. The handling bail and the shell II expanding mandrel lifting fixture are removed, and the four eyebolt holes are plugged with either beryllium or Inconel bolts.

Installation of Top Reflector Neutron Shielding

Two circular cans, B-4394, one conical can, F-4393, one insulating can, D-5647, and one spacer ring, D-5532, previously assembled, are given a complete dimensional inspection, and all weldments are evaluated metallurgically. The acceptable assemblies are then evacuated to 5 μ pressure and filled with helium to 5 psia. Next, each evacuating tube is pinched off and seal-welded.

At this stage the strut load ring–shell III upper subassembly is carefully lowered, by means of the handling jig, onto the beryllium until contact is made with the spacers. Vertical measurements are taken between two reference points – say

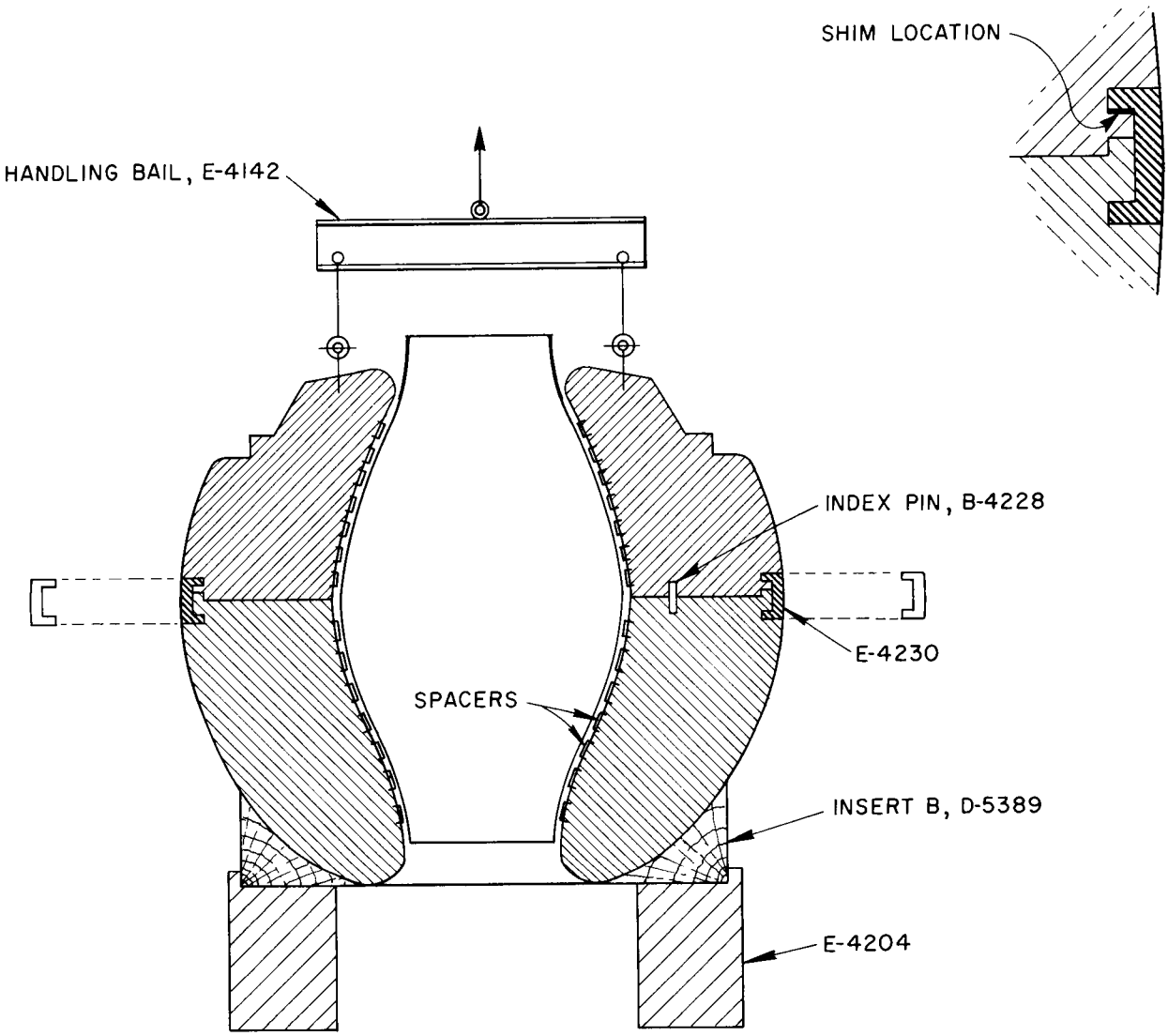

Fig. 8. Completed Beryllium Hemisphere.

surface Y to a gage point on the lower beryllium – and the subassembly is removed to allow installation of spacer ring and can assemblies. A method similar to that for shell II will be used to compare this data with measurements obtained after installation of this subassembly.

The two dowels (B-5533) are inserted into the top beryllium half, and the spacer ring is installed (see Fig. 9). It is essential to proper clearance between shell III and the upper outer spacers that the vertical distance from the equatorial plane to the top of the spacer ring be held to a close tolerance. The distance can be indexed from a gage point on the outside surface of the beryllium or from the top surface of shell II when it is properly positioned.

The insulating can is next added to the assembly, after a check to ensure that the depth of the

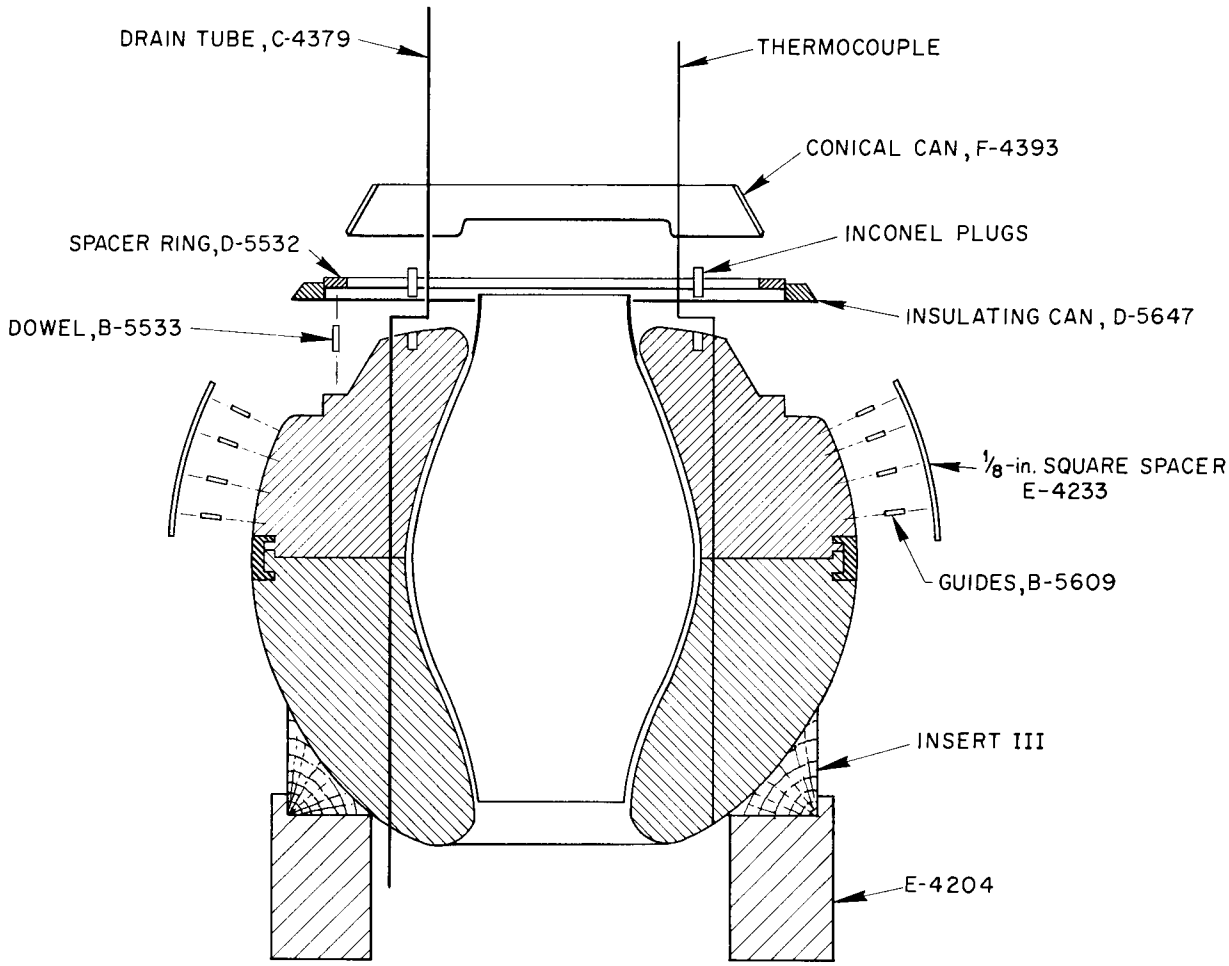

Fig. 9. Installation of Top Reflector Neutron Shielding.

drilled hole is sufficient to contain the evacuating tube. A final check is made for clearance between adjacent parts and to make sure that the can lies flat on the beryllium and does not buckle.

The bushings, B-5609, and wire spacers, B-4221 and B-4222, for the conical can are installed and properly sized so as to give an 0.011-in. minimum clearance between the spacers and the can. With the evacuating-tube notch as an index, the conical can is clipped to the beryllium, and a check is made of the spacer clearance.

Finally, the two circular cans are placed in position and clipped to the beryllium. The can bosses should fit properly in the holes.

Before the drain tube and the two thermocouples are installed, a recheck is made in order to determine whether it will be necessary to disassemble the beryllium; the installation of the assembled parts is shown in Fig. 9. The thermocouples should be checked out after bending and prior to installation.

Guides B-5609 and B-4232 and the upper outer spacers, E-4233, are installed on the north beryllium half. It probably will be necessary to use a template or guide to orient the slots in the guides. The spacers are formed so that intimate contact exists between spacer and beryllium and so that no force is required to fit the load ring–

shell III [redacted]subassembly into place. The data for the outside contour of the beryllium and the corresponding data for the inside contour of the shell III upper are correlated and the spacers sized to give a spacer-to-shell clearance of 0.017 ± 0.002 in. It is very possible that hand filing or grinding on the spacers, at assembly, will be necessary to ensure a proper fit.

Strut Load Ring–Shell III Upper Subassembly

The strut load ring–shell III upper subassembly, F-4292, as received for assembly, is a finished part machined to drawing tolerance. An adequate dimensional inspection makes possible proper spacer sizing and ensures proper fit with adjacent or mating parts. All welds are given a metallurgical evaluation and are approved for their intended use prior to assembly. The shell III upper has a predetermined amount of extra stock left at the equator for weld shrinkage.

The handling jig is placed on the strut load ring–subassembly, which is carefully lowered onto the beryllium (see Fig. 10) until the previously installed dowel studs are engaged. After the subassembly has been firmly and evenly bolted through the spacer ring to the beryllium, a second set of measurements is taken between the same reference points used before installation of the spacer ring. By comparing the two sets of data and calculating the perpendicular to the tangent, the minimum spacer-to-shell clearance is established.

The drain tube is bent into the groove of the beryllium, and then the clip and bolt are placed over the last spacer, and the tube is clamped into position. Next, the lower beryllium bushings, B-4308, guides, B-4232 and B-5609, and spacers, B-4226, B-4227, B-4316, and B-4317, are sized and installed by using the procedure previously described (see Fig. 11).

Shell III Lower

The shell III lower, E-6392, as received for assembly contains the adapter spur and is finish-machined to drawing tolerance. A predetermined amount of extra stock is left on both the equatorial and the bottom weld groove for weld shrinkage. Again it is necessary that the contour data for the shell III lower and the lower beryllium be correlated and the spacers sized accordingly. Because of the complex shape of the shell and the difference in spacer-to-shell clearance on the bottom, as compared with the outer spacer-to-shell clearance, interferences cannot be checked by the total-travel method. Therefore it is necessary and very important that accurate measurements be obtained for both the shell III lower and the spacers and, furthermore, that these data be cross-referenced to the gage marks on the outside surface of the shell. The sweeping fixture, F-5708, is used to measure the spacer orientation and height.

Again, by use of the sweeping fixture, the shell II is positioned concentric with the reactor, and its equator is placed in the plane of the beryllium reflector. Shell II is tack-welded to the load ring, and a gage point is blued and scribed at some predetermined fixed distance from the equator. The assembly is lowered over the shell III lower, the equatorial joint is butted, and, by using the sweeping fixture, the concentricity of the shell segments is checked. The weight of the subassembly should not be rested on the shell III lower.

The gage marks on the shell III lower are then checked for orientation, and the shell III equatorial joint is tack-welded. It should be evident at this point that because the shell III equatorial weld will shrink less than the weld between shell II lower and the adapter spur on shell III lower, a gap will exist between the two shells. It is therefore necessary to partially weld the shell III equatorial joint, and when the shell II lower–adapter joint shrinks to a butted type, the two weldments are completed in alternate passes. Because of the complexity of making these welds, it is necessary that frequent and accurate measurements be taken. After welding, the weld shrinkage is checked by measuring the distance between gage marks, and spacer-to-shell clearances are computed. If the values are acceptable, the shell II–load ring weldment is completed. The weldments are then given a complete metallurgical evaluation. An investigation of the contour of the subassembly is made after all welding has been done, and the amount and location of deviations are noted. The sweeping-fixture arms are removed, and the shell II boring fixture is installed (see Fig. 12). The inside of the shell II collar is finish-bored to tolerance, and the outside is machined so that the collar will fit the north head. The six plugs, B-5548, are installed and seal-welded to the load ring.

[redacted]

[redacted]
ORNL-LR-DWG 24929

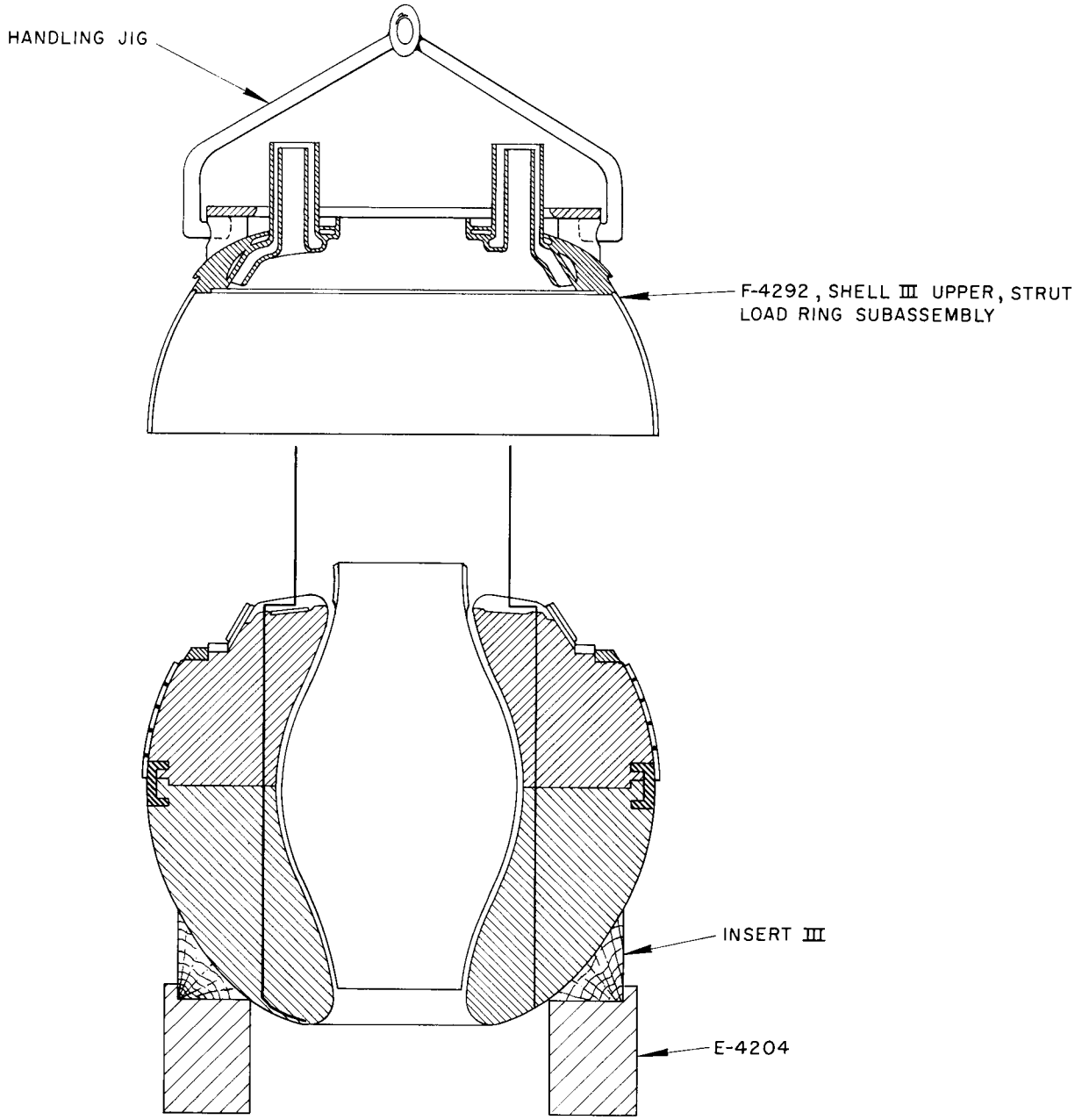

Fig. 10. Installation of Strut Load Ring–Shell III Upper Subassembly.

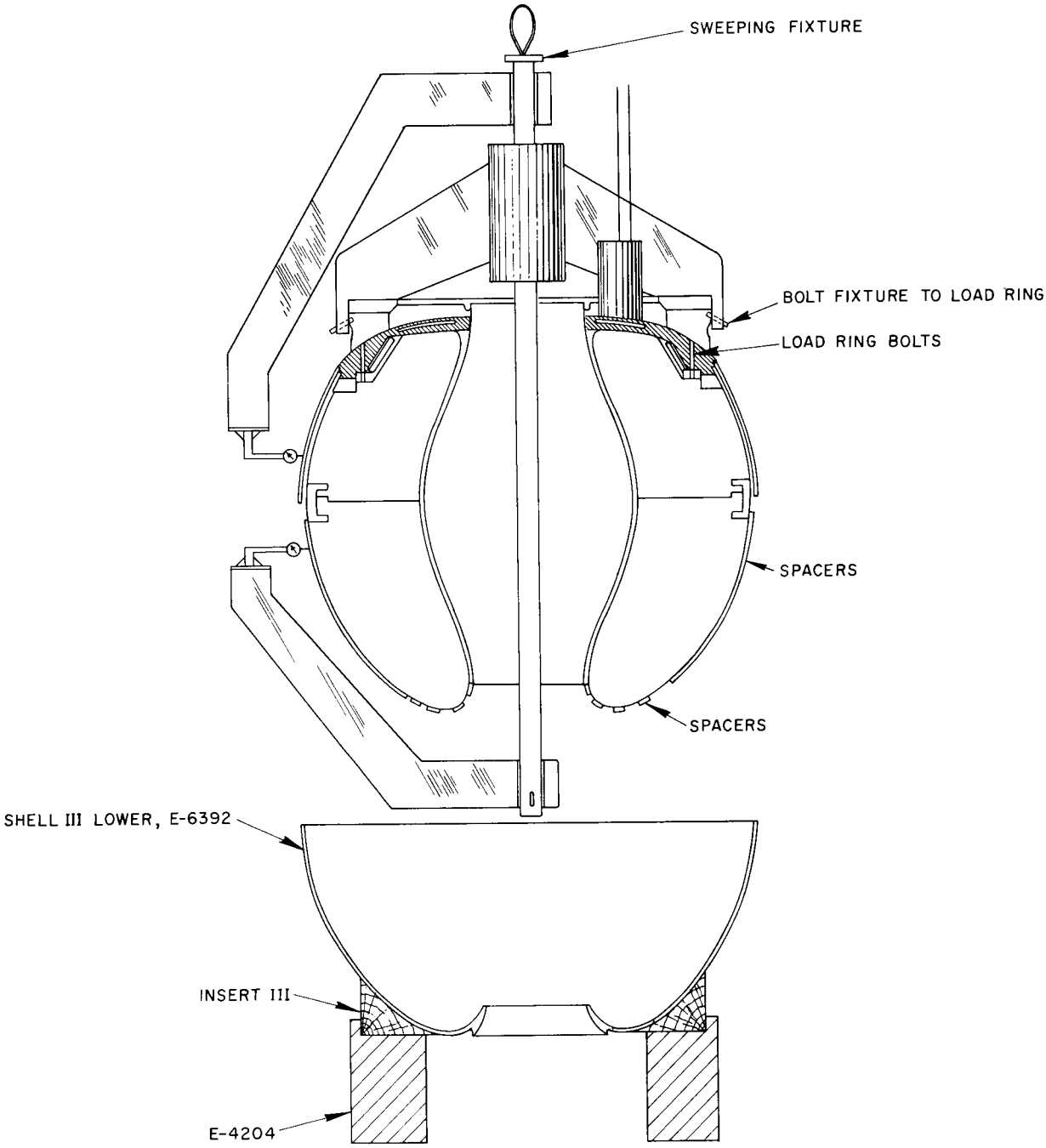

Fig. 11. Shell III Lower.

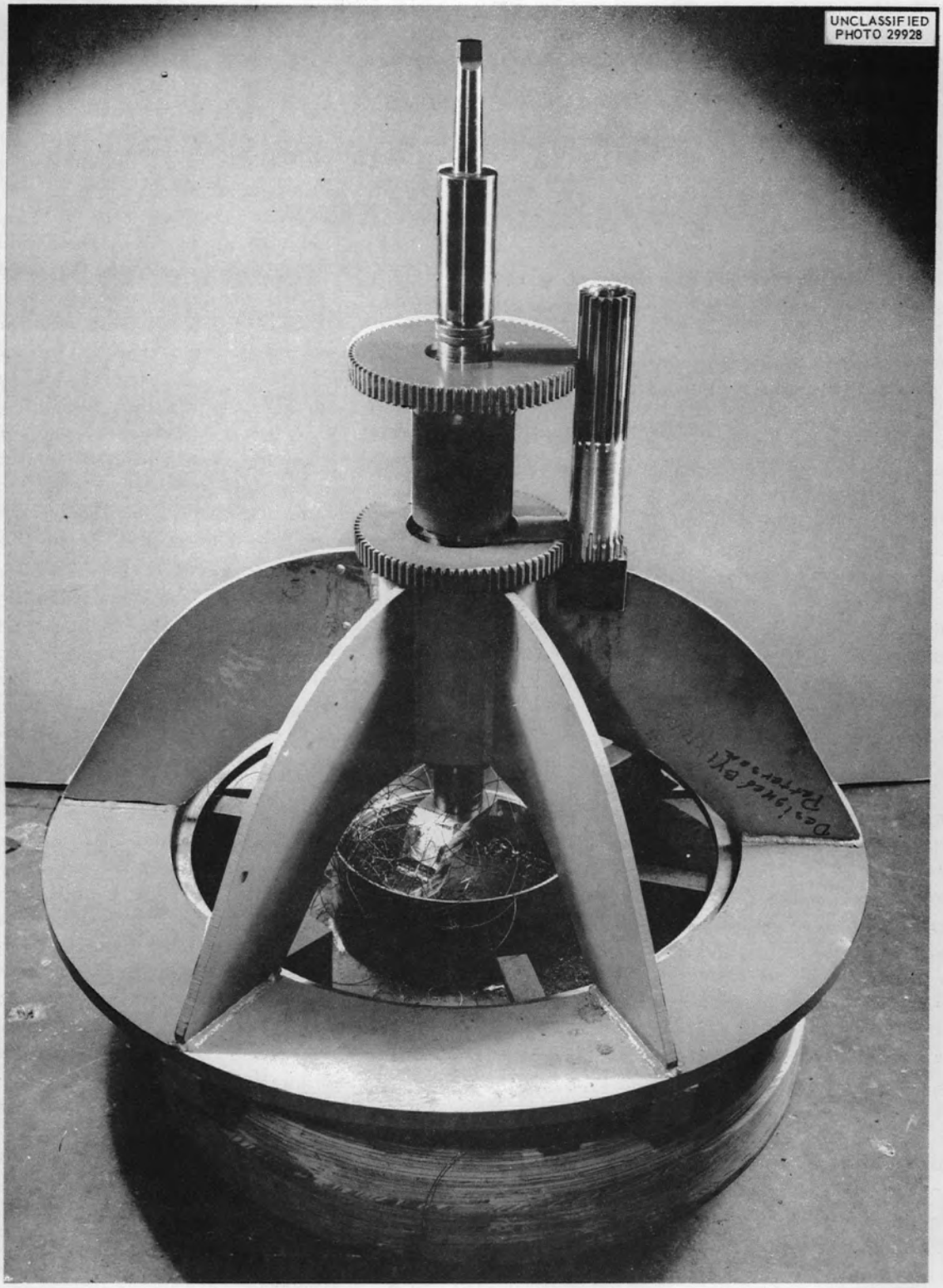

Fig. 12. Shell II Boring Fixture.

The sodium inlet and outlet pipes are then plugged, and the system is evacuated and helium-leak-tested. It is permissible for the subassembly to rest on insert III, on fixture E-4204, for vacuum testing.

Installation of Shell III Neutron Shielding and Shell IV

Both halves of shell IV are trimmed, and a predetermined amount of stock is left for weld shrinkage at each weld preparation. The shell IV upper is prepared and is suspended above the assembly prior to installation of the neutron shielding. This eliminates the necessity of resting the weight of the assembly on the B_4C lids while the shell is threaded over the crane ropes.

Layout drawing F-4066 shows the assembly of the neutron shield components around shell III. With the assembly suspended by the eyebolt of the sweeping fixture (see Fig. 13), the sweeping-fixture arms are installed, and shell III is marked for placement of the cermet (Cu-B_4C). The fitting of each piece of cermet on shell III and its relation to each adjacent piece are critical. A gap between adjacent edges of less than 0.017 in. (for thermal expansion) or greater than 0.025 in. (excessively large "window") cannot be tolerated. These clearances are such that when the assembly is hot the differential thermal expansion will reduce the gaps to a calculated 0.003 to 0.011 in. It is therefore advisable that each row of cermet be individually trial-positioned and, if necessary, hand-worked to give the required gap. The cermet segments are punched so as to give a point contact when spot-welded to the shell. Welding is of the condenser discharge type and is done with the hand-held gun.

After fitting and welding of the Cu-B_4C segments, a complete dimensional inspection is given the installation for concentricity. The stainless steel cans are assembled over the cermet by using the same procedure as above, and they are spot-welded to the Cu-B_4C. Clearance between these cans should not exceed that needed for assembly purposes; that is, a zero or minimum gap is desirable after the cans, B_4C tile, and lids are in place. It is important that the location of the tile and the cans be controlled to eliminate any possible neutron "window"; therefore every effort is made to cover the surface as completely as possible and to avoid any continuous gap through both the cermet and the tile.

After the cans are spot-welded to the Cu-B_4C, the B_4C tile are placed in the cans, and a stainless steel lid is inserted over the tile. It is possible that the lids in the southern hemisphere may have to be punched onto the cans like those of aspirin boxes in order for the tile to be retained. It is also expected that considerable effort will be spent in fitting the cans, tile, and lids into their proper location.

A special effort must be made to keep the buildup of clearances between these parts to within the specified amount so that shell IV halves will fit into place without any interference. A 0.016- to 0.020-in. clearance between the installed can lids and shell IV is required. The concentricity of the installed can lids is checked, and the data are compared with those of shell IV in order to determine interferences. If the data indicate that there is no interference between the can lids and shell IV and that the clearances are acceptable, the 0.010-in. split-ring equatorial weld band, B-4326, is installed.

The shell IV lower is placed on insert IV, on fixture E-4204, below the suspended assembly, which is lowered onto shell IV without any weight being transferred to the shell segment. The upper sweep arm of the fixture is removed, the shell IV upper is lowered onto the assembly, and the sweep arm is reinstalled. The shell IV upper is aligned with the load ring with a zero gap and then tack-welded, and concentricity and vertical dimensions are rechecked. The weldment is completed, and lid-to-shell clearances at the equator are checked. Next, the two shell segments are butted and properly aligned at the equator; then they are tack-welded, and welding is continued at the equator until a zero gap exists between the shell IV lower and the adapter spur. Both weldments are completed in alternate passes. After welding, shell IV is swept, and the dimensions are recorded. The data should be adequate for calculating the lid-to-shell clearances and for subsequent use during main heat exchanger installation.

The assembly is now rested on insert IV, on fixture E-4204. The boron vent tube is connected to a vacuum pump, the neutron shielding cavity is evacuated, and the weldments are leak-tested with helium. The shell IV weldments are then given a complete metallurgical evaluation.

This completes the reflector assembly; it will appear as shown in Fig. 14 and will weigh approximately 3462 lb.

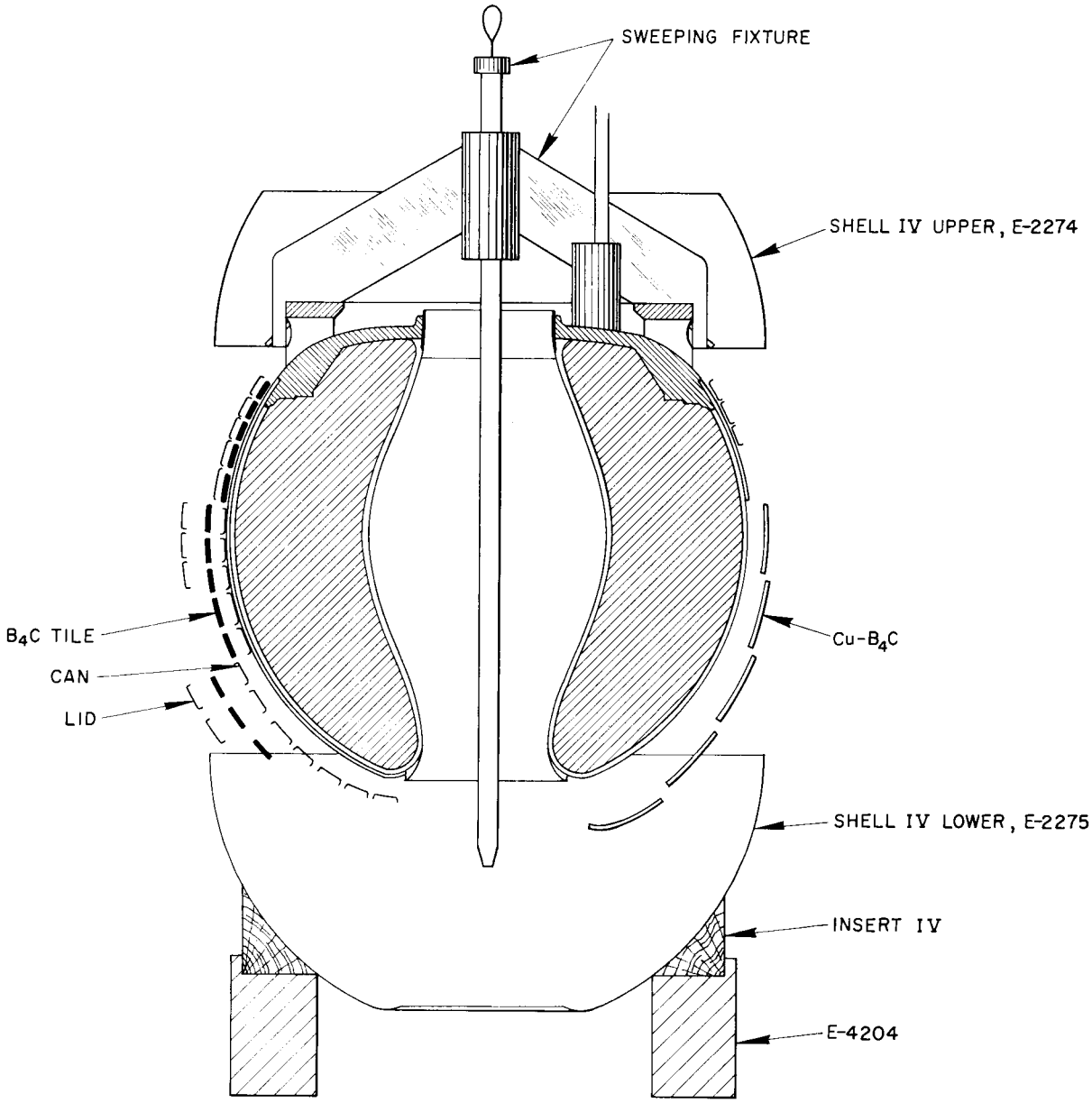

Fig. 13. Installation of Cermet and B_4C Tile.

[redacted]

[redacted]

ORNL-LR-DWG 24932

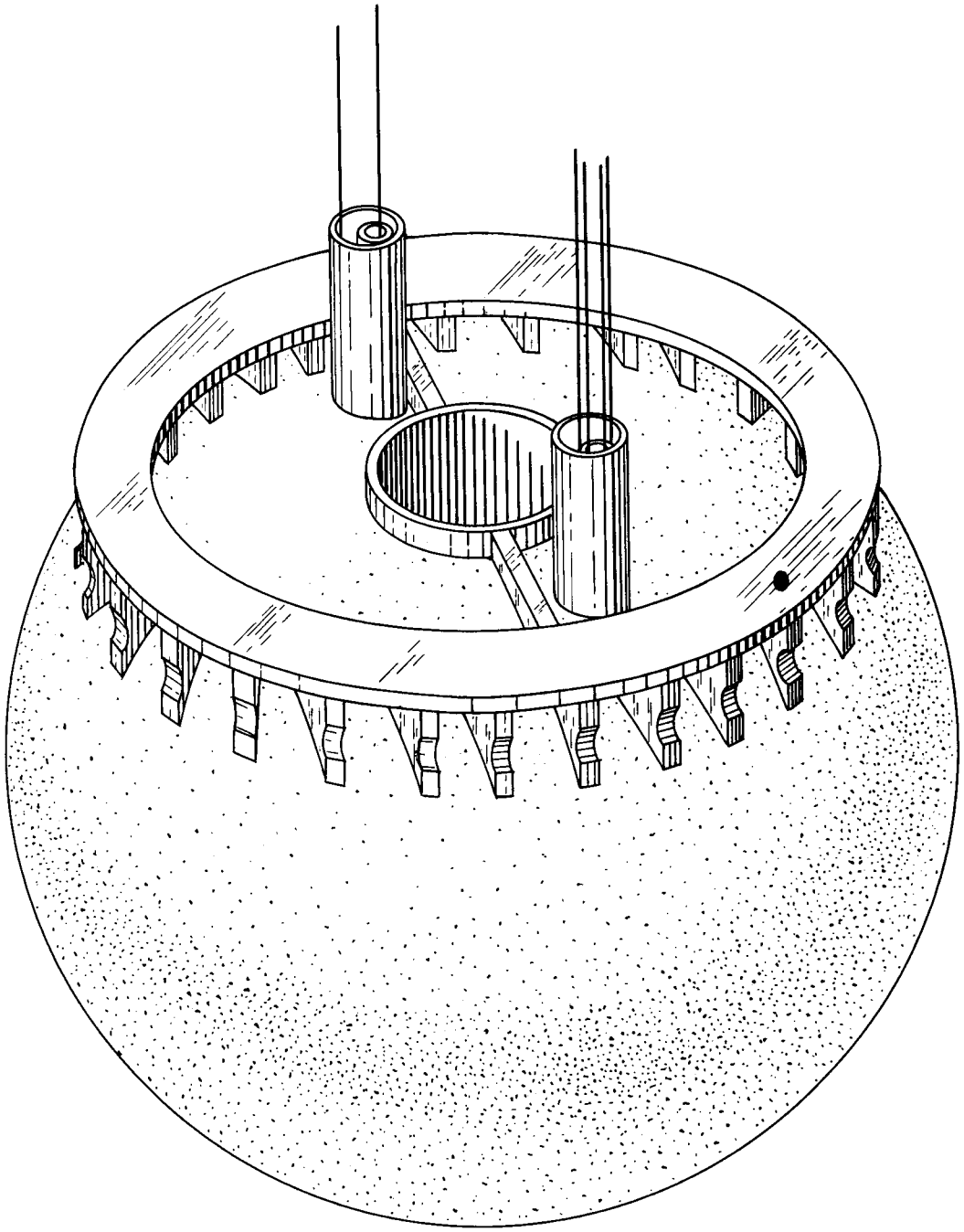

Fig. 14. Reflector Assembly.

INSTALLATION OF MAIN HEAT EXCHANGERS

Each of the 12 main heat exchangers, F-4124 (see Fig. 15), is given a metallurgical evaluation and then a vacuum test, which should indicate no detectable leak on the maximum-sensitivity scale of the equipment. Each exchanger is then placed on the dummy-sphere checking fixture, D-5075 (see Fig. 16), and checked for interferences.

The reflector assembly is rested in a fixture similar to E-4204 and positioned at a height compatible with that of the "pie wagons," E-4172. An orienting fixture, E-4209, is bolted to the top surface of the load ring. This fixture, which resembles two large circular saw blades, is used to position the inlet tube of the exchangers at the proper angle with respect to the reflector (see Fig. 17). The orientation of the exchangers with respect to the enclosed reflector is most important, since the inlet and outlet tubes must extend through the sleeves welded to shell VI lower and to the north head. Therefore the exchangers must be located properly in longitude, and the tubes must be vertical. Twelve acceptable exchangers (see Fig. 15) are placed on individual pie wagons, and nine of them are brought into position around the reflector, forming as tight a fit as possible (see Fig. 18). Simultaneously the remaining three exchangers are brought into position. The direction of movement of each exchanger at assembly is parallel to the center line of the angle of 140 deg subtended to the axis of the reflector by the inlet and outlet tubes. Clearances are such that it is necessary for the bundles to interlock and travel the last few inches simultaneously.

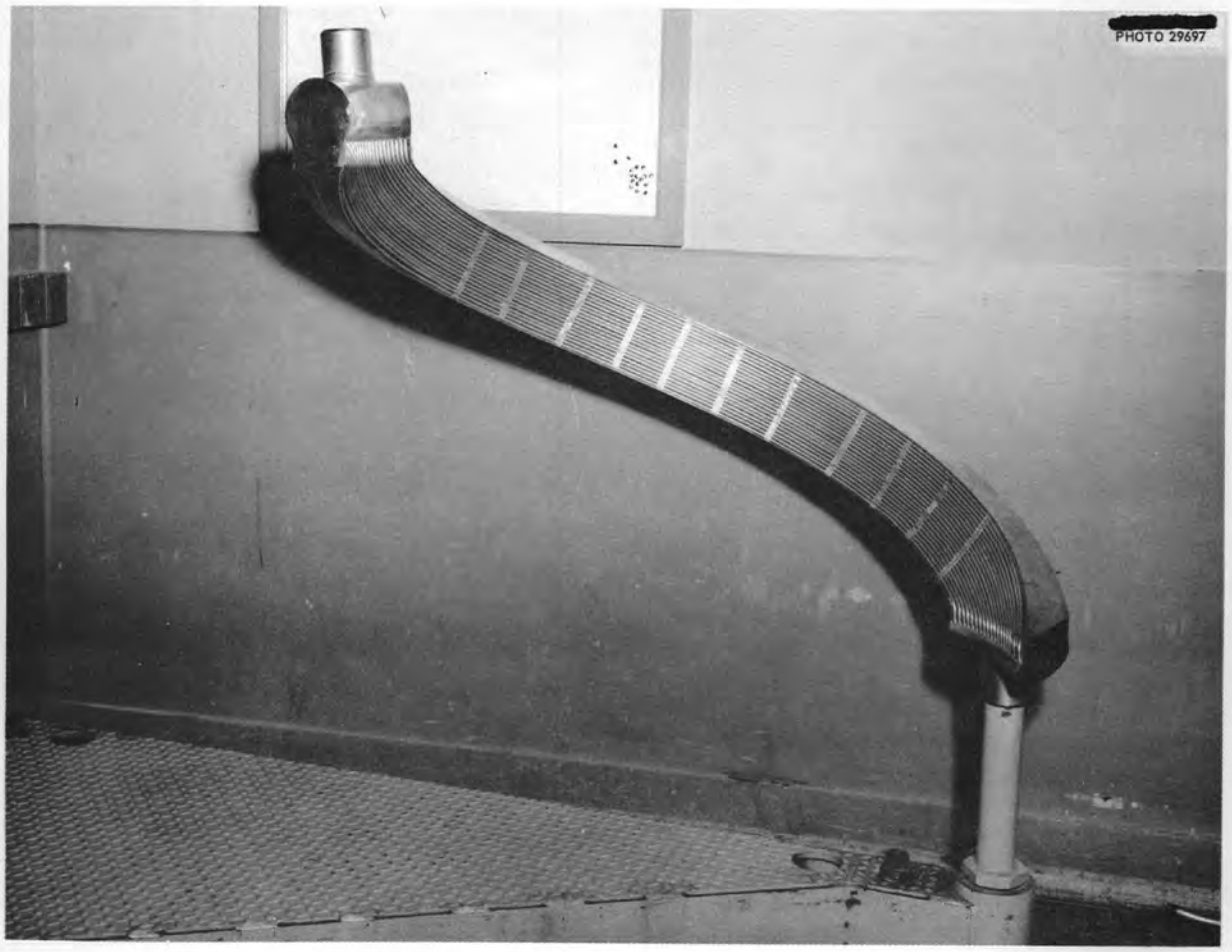

Fig. 15. Main Heat Exchanger.

Fig. 16. Dummy-Sphere Heat Exchanger Checking Fixture.

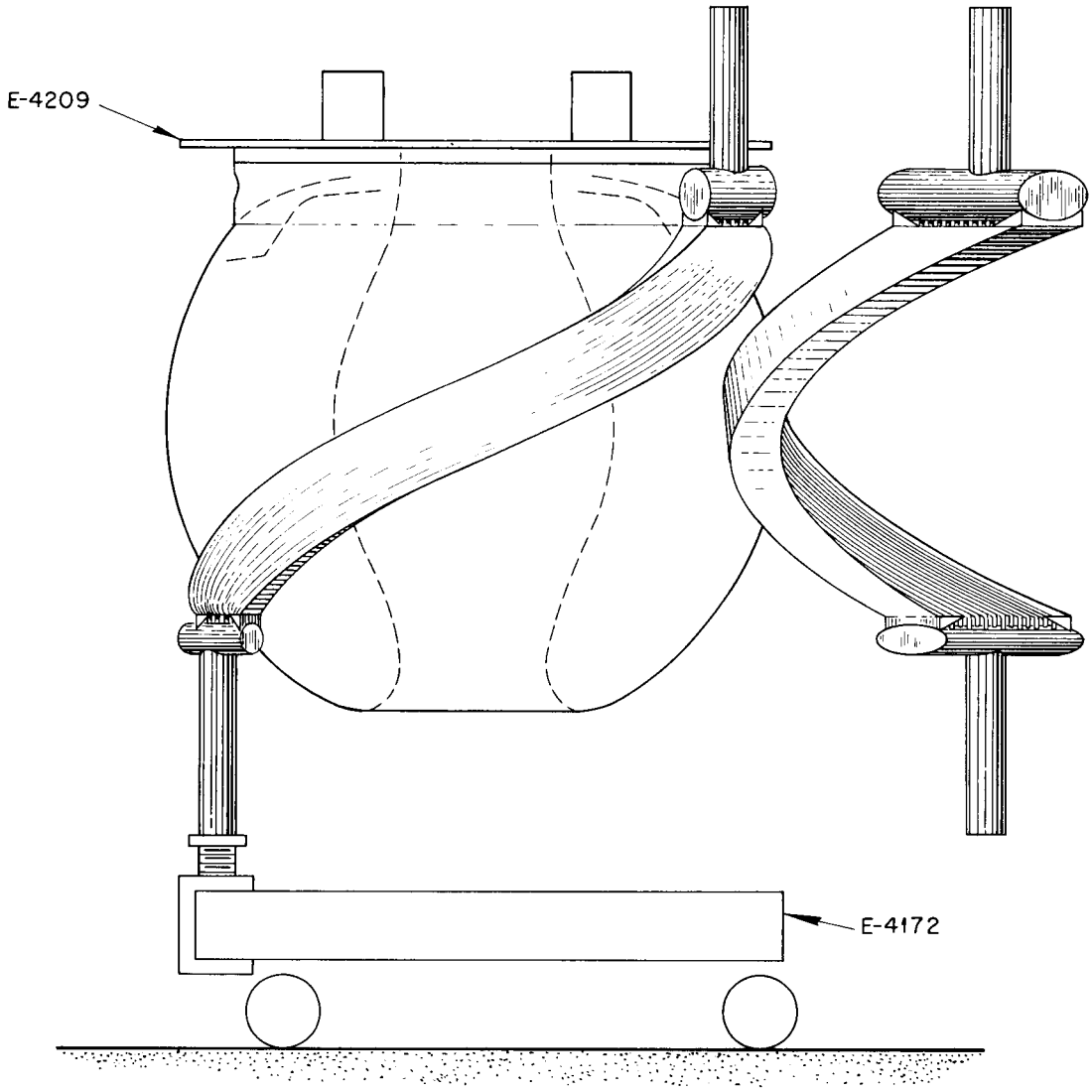

Fig. 17. Heat Exchanger Installation Fixture.

The pie wagons are triangular, with a 30-deg angle at the front end, and when in place form a work platform. They are equipped with adjustable casters to compensate for an uneven floor, so that each inlet and outlet tube may be aligned plumb. Adjustable jacks are provided which can be substituted for the wheels in order to maintain proper alignment after the bundles are in place. A counterbalance must be placed on the outside corner of the pie wagon when an exchanger is inserted over the carrying stub.

After the 12 exchangers have been installed, a large strap is fastened around them just below the pins at the equator. The clamp is tightened to hold the heat exchangers firmly in contact with shell IV.

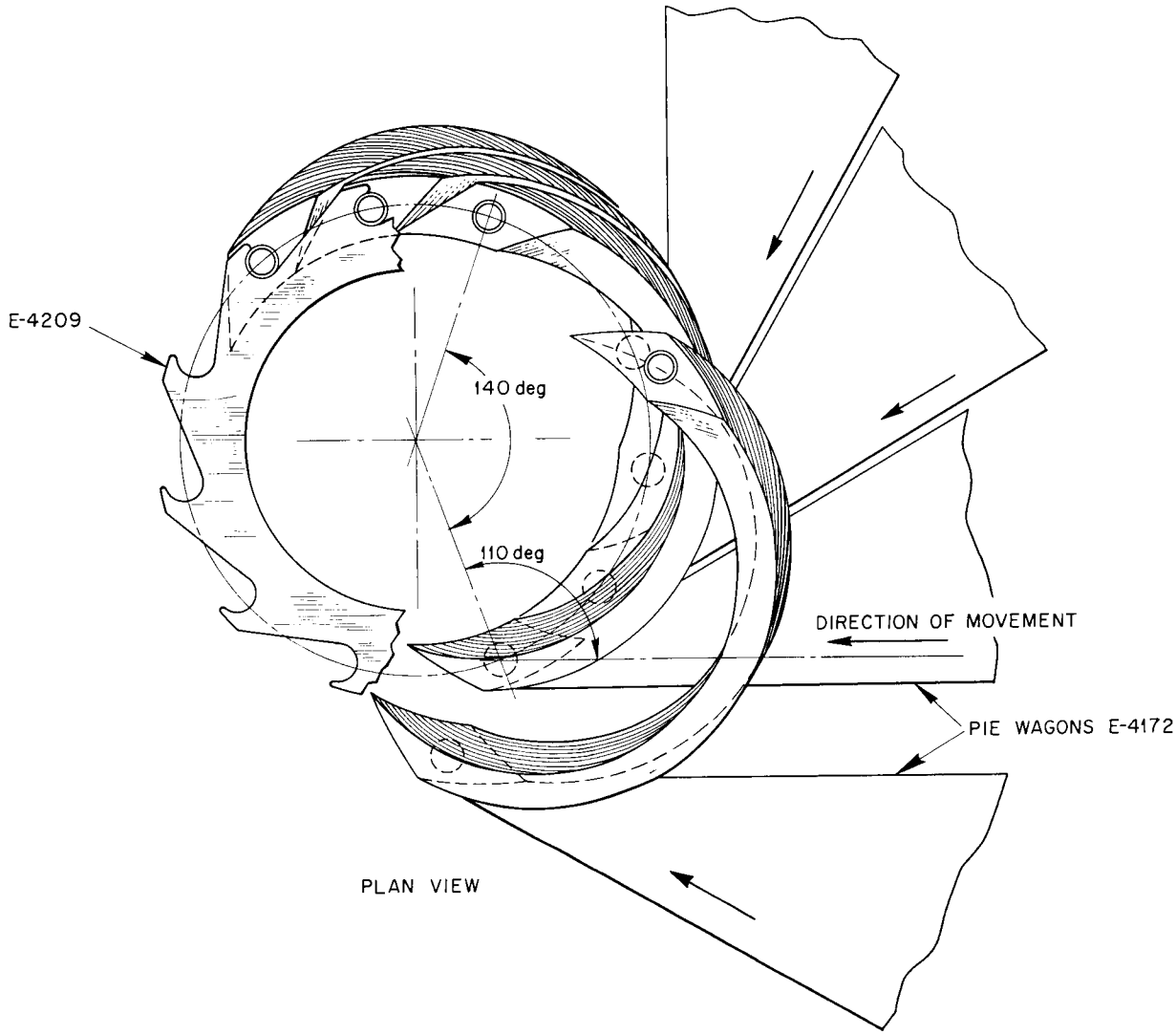

Fig. 18. Heat Exchanger Orientation.

A modified sweeping fixture is installed, and the concentricity of the heat exchangers is checked at various latitudes. This data is retained for comparison with that for shell V. The 2262-lb heat exchanger has now increased the weight of the partially assembled reactor to approximately 5724 lb.

NORTH HEAD

The north head subassembly, F-4104, as received for assembly, includes the shell VI upper, which, along with the lower deck skirt, E-4106, is machined inside and outside after welding, to the specified drawing tolerances. At the equator,

0.085 in. of extra stock is left for weld shrinkage. Holes are bored and sleeves are installed for the heat exchanger inlet pipes, fuel pump barrels, thermocouple tubes, and sodium return pipes (see Fig. 19). The subassembly is given a complete metallurgical and dimensional evaluation. The dimensional inspection should be extensive enough to define the inside and outside contours of the deck skirt and the shell VI upper with respect to the reactor center line, and to define any other points of interference between the north head and adjacent parts.

The subassembly is moved into the assembly area on fixture F-4735 (see Fig. 20). The bridge is removed from F-4735, and the subassembly is inverted. Blocks are placed under the ring, which

[redacted]
ORNL-LR-DWG 24935

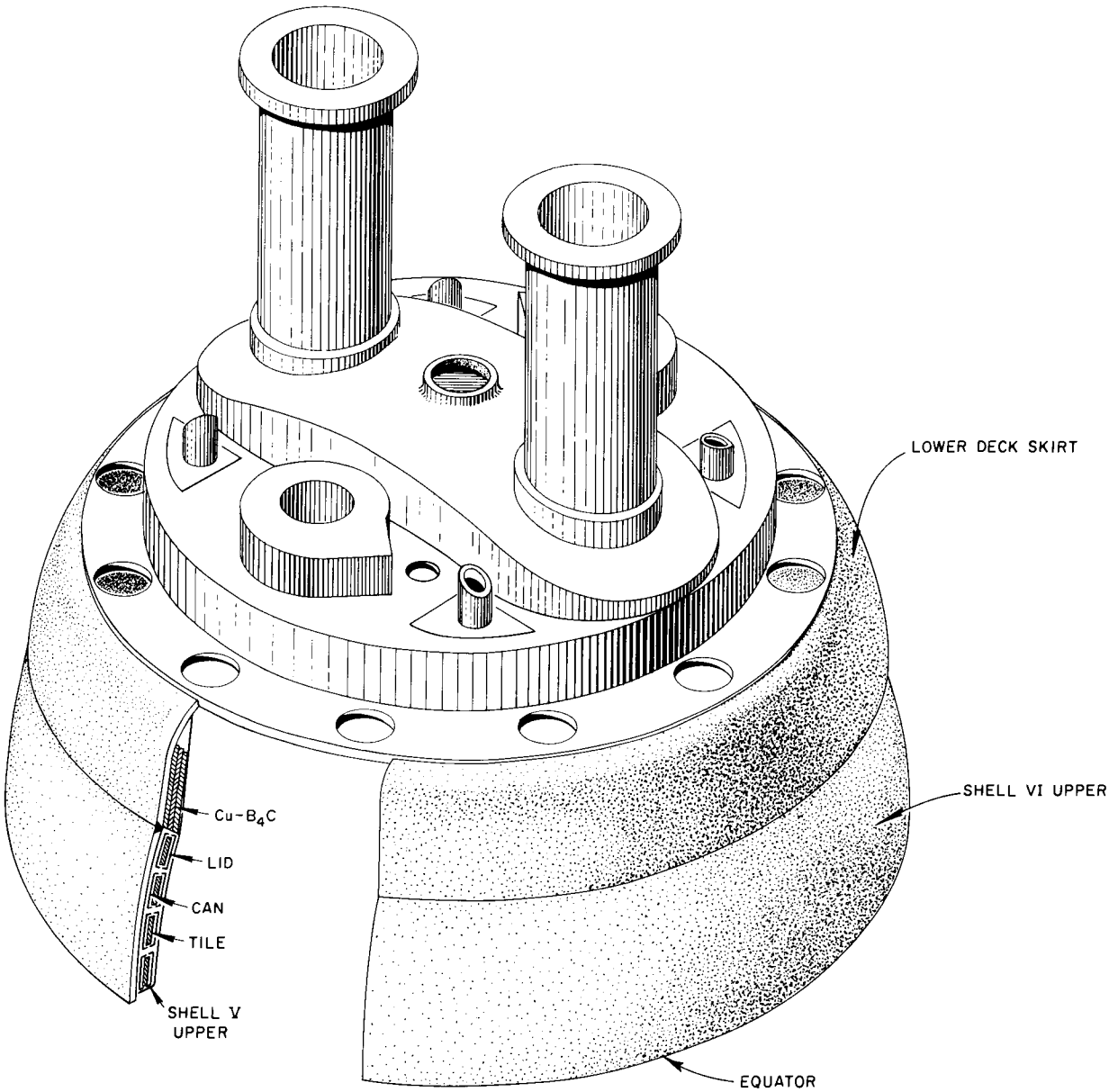

Fig. 19. North Head Assembly.

Fig. 20. North Head Welding Fixture.

is then unbolted from the base. Bearing caps are removed, enabling removal of the base and exposure of the inside surface of shell VI. Next, the modified sweeping fixture is installed on the mating surface of the north head load ring subassembly, and the inside of shell VI is scribed for placement of the Cu-B_4C and the tile cans. The neutron shielding is installed by the procedure previously described for the reflector. Then the surfaces of the can lids and the Cu-B_4C are swept, and the data is compared with that for the shell V upper. Clearance between lids and shell should be 0.039 ± 0.002 in. The shell V upper is lowered over the neutron shielding and is welded to shell VI. It will not be possible to make allowances for weld shrinkage on shell V. After welding, the concentricity of shell V is checked, and the data is compared with that previously obtained for the main heat exchangers. There should be a minimum clearance of 0.025 in. between shell V and the heat exchangers.

Before removal of the sweeping fixture, a gage line is scribed on the outside surface of shell VI at a predetermined distance from the equator. The sweeping fixture is removed and fixture F-4735 reassembled. The north head is then reinverted to the upright position. *Caution: the skirt locator, F-4731, must be removed from the base.* The lifting fixture, D-5717, is installed, and the subassembly is moved into the x-ray room for metallurgical inspection. After inspection, the shielding cavity is evacuated, and the shell V weldments are leak-tested. If no leaks are detected, the space is filled with 5 psia of helium, and the evacuation tube is pinched off and seal-welded.

The north head is lifted by using fixture D-5717, which is attached to the fuel pump barrels, and it is carefully lowered over the reflector and the heat exchangers, which are supported on insert IV, on fixture E-4204 (see Fig. 21). The lowering of the north head and its alignment with the

[redacted]
ORNL-LR-DWG 24936

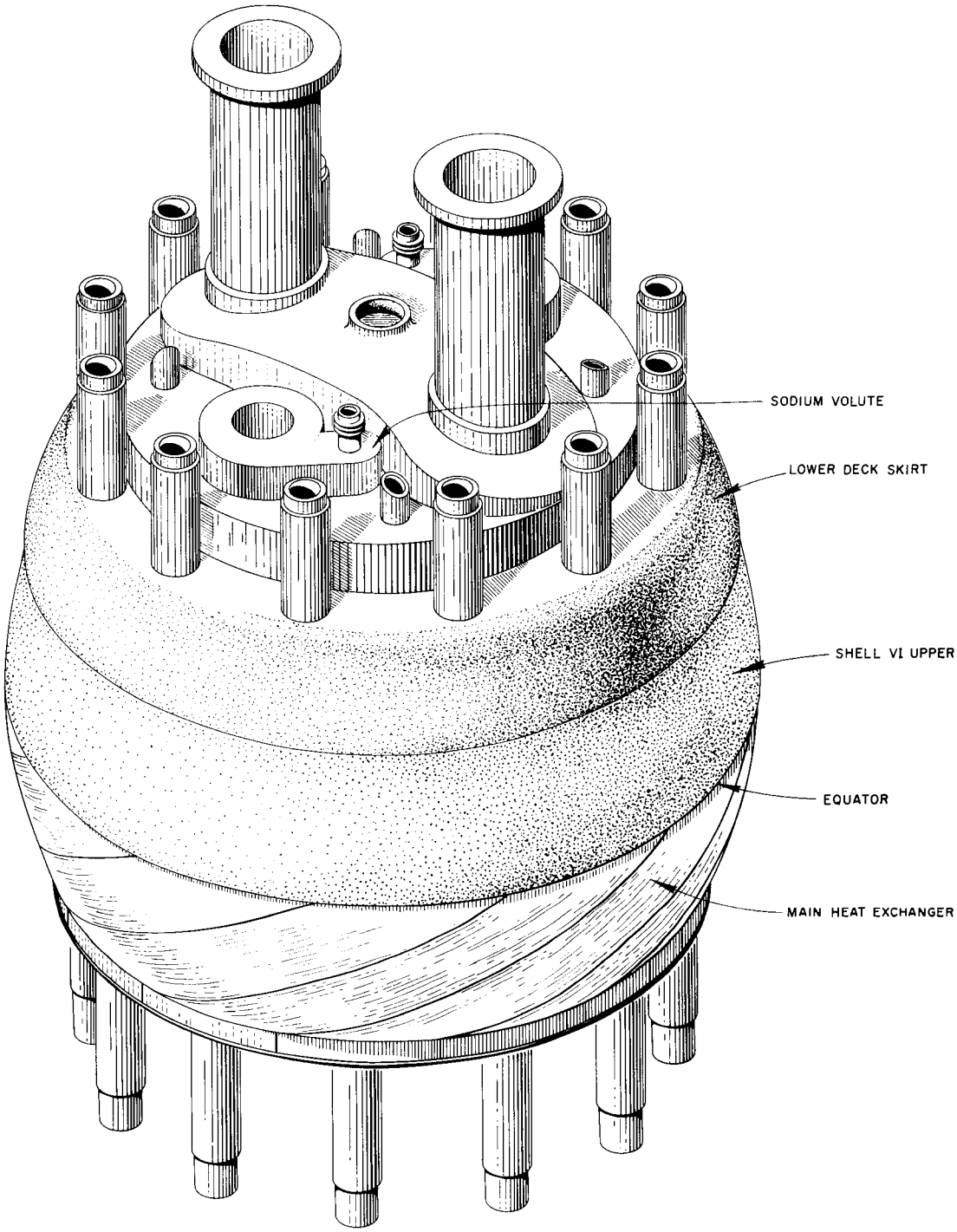

Fig. 21. North Head Installation.

reflector are accomplished with the use of an expanding plug device (see Fig. 22), which guides the lower deck of the north head onto the load-ring flange of the reflector. After assembly, clearance in this area should be 0.004 ± 0.002 in. (radial). After use, the fixture is contracted and is lowered to and removed from the bottom of the reflector. The north head is oriented with respect to the load ring by means of the locating pin, B-4899.

It is necessary that the gage marks on shell VI be located with respect to the equator of the partially assembled reactor. This can be done by accurately measuring the vertical distance from the gage marks on the inside of shell II or from a reference point on the sodium-return pipe. If by calculation this distance checks with the predetermined distance below the mating surface of the north head load ring, the north head is properly seated and it is permissible to proceed to the next step.

UNCLASSIFIED PHOTO 29924

Fig. 22. Expanding Guide Fixture.

The two sodium-return pipes are welded to the north head. These weldments should be given a complete metallurgical evaluation, since they not only support the entire weight of the reflector and heat exchangers during assembly, but also separate sodium from fuel when the reactor is in operation.

Fixture D-5717 is now removed. The weight of the north head–reflector assembly is still resting on insert IV, on fixture E-4204. The instrument lines emerging from the north head are bent so that they will pass through their respective holes in shell VII. A check is made for defective thermocouples. The auxiliary heat exchanger inlet and outlet pipe extension is placed in position and welded to the assembly. The north head installation (see Fig. 21) is completed by threading the two thermocouples and one drain tube through the sodium volute elbows, D-2807, welding the elbows to the scrolls, and welding the elbow top, C-4896, and bellows, C-6335, to the elbow.

The north head–shell VI assembly weighs approximately 1725 lb and increases the weight of the partially assembled reactor to 7281 lb.

SHELL VII UPPER–SODIUM PUMP BARRELS

Weldment L, the shell VII upper–sodium pump barrel assembly, F-2792, is finish-machined to drawing tolerances. The assembly is stress-relieved, and all weldments are metallurgically inspected. A complete dimensional inspection is performed, and the data are presented in such a manner that interferences and clearances with mating parts can be computed. Extra stock, 0.100 in., is left at the equator for weld shrinkage.

With the partially assembled reactor resting on insert IV, on fixture E-4204, the shell VII upper is picked up with cables attached to the six machining bosses and lowered onto the north head. The cables are suspended from a Dillon dynamometer (weight gage), which hangs from an overhead crane. The crane should have sufficient lift to enable threading of the instrument lines extending approximately 6 ft upward from the north head through their respective holes.

Independent movement of the north head–reflector assembly with respect to shell VII can be accomplished by paralleling, at the dynamometer hook, the cables attached to shell VII; a 4-ton hand crane is attached to fixture D-5717, which is then attached to the fuel-pump barrels (see Fig. 23). The assemblies are lifted from

[redacted]

ORNL-LR-DWG 24937

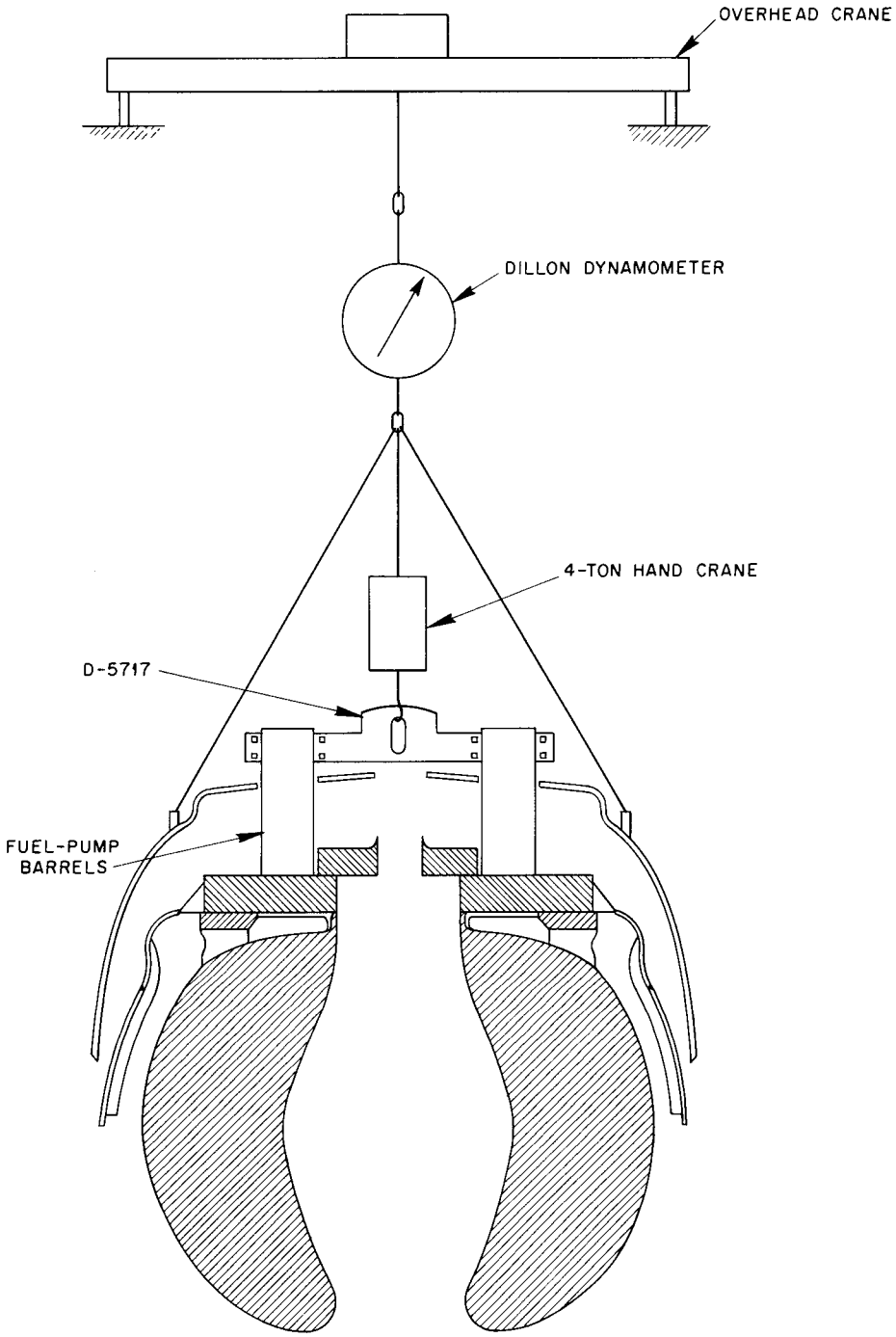

Fig. 23. Shell VII Suspension System.

E-4204, and the north head–reflector assembly is lowered with the hand crane until maximum shell VII–north head separation is attained. This exposes the shell VI upper gage marks and prepares the assemblies for insertion of the island–south liner.

The shell VII upper assembly weighs approximately 2179 lb and increases the cumulative weight of the partially assembled reactor to 9661 lb.

ISLAND–SOUTH LINER ASSEMBLY

Island

The island beryllium halves, F-4907 and F-4915, having been machined to drawing tolerances, are given a metallurgical and dimensional inspection. Shell I upper and lower, E-2265, are then machined to drawing tolerances, and identical inspections are performed. By comparing the data obtained for the inside contour of the shell I halves with the corresponding data for the beryllium halves, the proper spacer heights can be obtained, giving a spacer-to-shell clearance of 0.0035 ± 0.0015 in. The spacers, B-4220, are contoured and sized by using the procedure described previously (cf. "Reflector Assembly," this report). Orifices 0.115, 0.108, 0.133, and 0.145 in. in diameter are placed in the first, second, third, and fourth rows, respectively, of the sodium passages, at the beryllium equator, for the purpose of balancing the coolant flow. Next, the bushings, B-4307, are installed in both halves of the beryllium; then the index pin, B-4913, is inserted in the lower beryllium, and the two halves are fitted together. The lathe centering fixture is then inserted through the control-rod hole, and the subassembly is set up between centers (see Fig. 24). Next, the sized and contoured spacers are driven into the bushings, and the elevation

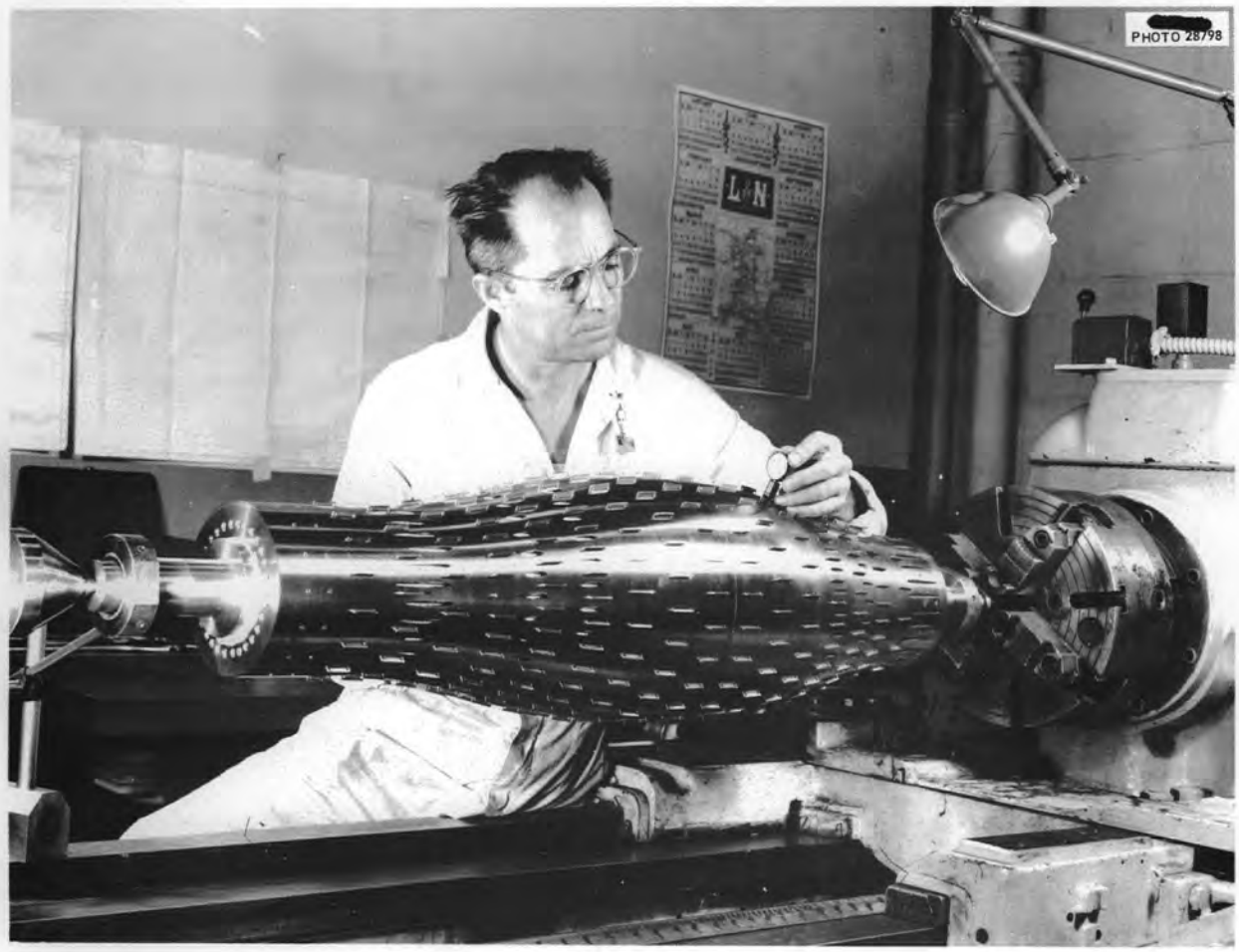

Fig. 24. Beryllium Island Assembly.

of each spacer is checked. It may be necessary to hand-shape some spacers after installation in order to obtain the desired spacer height.

By using the shell I trimming fixture (see Fig. 25), each half of shell I is set up in a lathe and trimmed to the desired length, and the weld grooves are prepared. On each end of each shell I half, 0.030 in. of stock is left for weld shrinkage. The shell segments are then fitted over the beryllium and checked for interference. If the above data indicates that the clearances are acceptable, the subassembly is set up between centers, the equatorial joint is butted, the tacking belt (larger belt in Fig. 26), is installed and the two shell segments are tack-welded (see Fig. 27). The tacking belt is then removed, and the weldment is completed. The amount of transverse shrinkage after welding is obtained by the total-travel method, after measuring the change in distance between the gage marks.

The vane mount, C-5523, is set up between centers on the trimming fixture (see Fig. 28), and a length compatible with shell I upper is formed. Because the vane mount–shell I upper junction occurs on the curve, it is impossible to allow stock for weld shrinkage and to maintain a perfect fit when the two parts are butted for

Fig. 25. Shell I Trimming Fixture.

Fig. 26. Shell I Tacking Belts.

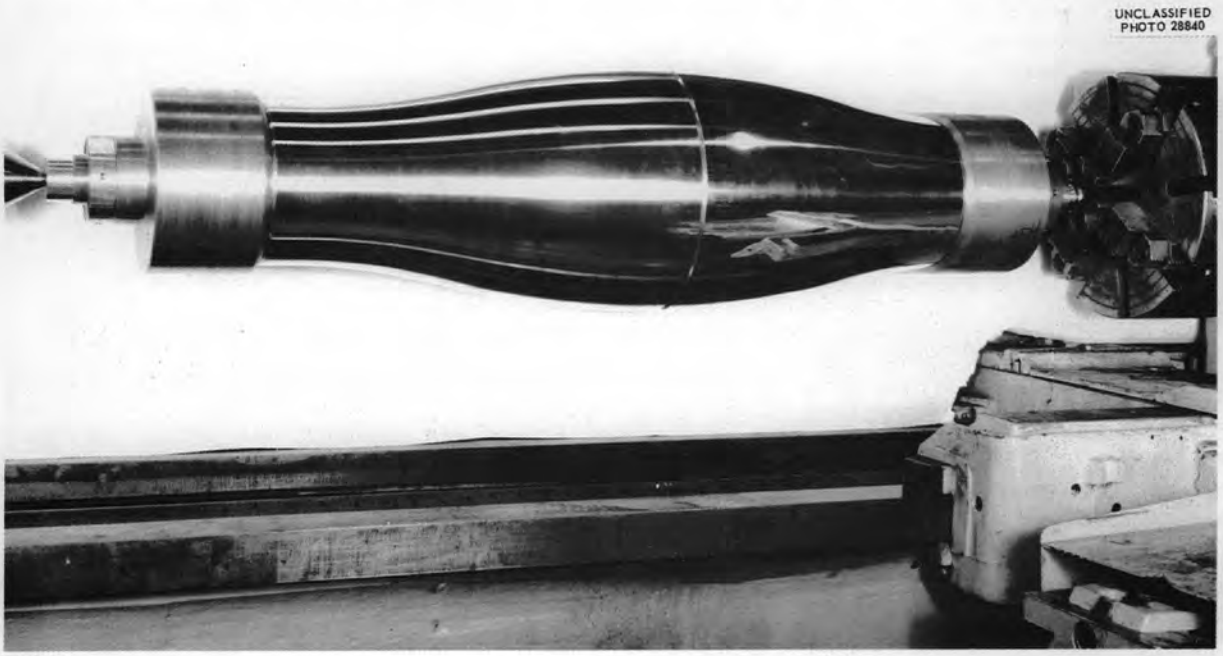

Fig. 27. Island Assembly.

Fig. 28. Vane Mount Trimming Fixture.

welding. Therefore on the ART this weld is displaced upward to the flat part of the vane mount, and a bellows skirt is substituted.

The vane mount is trimmed to the desired length, and the assembled and evacuated (5 psia helium inside) neutron shielding can, C-4949, the top island cap, D-4902, and the vane mount are in their respective positions. Then the expanding mandrel welding fixture is inserted through the control-rod hole, and the assembly is set up between centers for welding. The vane-mount tacking belt (smaller belt in Fig. 26) is installed, and shell I upper is tack-welded to the vane mount. Concentricity and alignment are checked, and the weldment is completed. Again, gage marks scribed on the vane mount and on shell I upper are used to index transverse shrinkage. By the total-travel method described for shell II, the spacer-to-shell clearances are checked after this weld is made.

With the use of the expanding mandrel welding fixture, the bellows, C-5517, is butted and welded to the vane mount.

The guide tube assembly, consisting of the guide tube cone, C-5521, the guide tube, C-5520, and the guide tube sleeve, C-5524, is assembled and machined to drawing tolerances. The space between the guide tube and the sleeve, having having been filled with Fiberfrax type SXW insulation, is evacuated and filled with helium to 5 psia. The guide tube assembly is then fitted over the expanding mandrel fixture, positioned, and welded to the bellows. An adequate metallurgical and dimensional inspection completes the island assembly.

South Liner

As received for assembly, the shell VI lower, F-2267, is finish-machined to drawing tolerances, except in the region around the main heat exchanger sleeves. The shell is then set on a suitable work bench, and the outer spacers, E-5514, are sized to give a spacer-to-shell VII clearance of 0.010 ± 0.002 in. The spacers are welded to the shell. It is necessary that templates be made for orienting the spacers, which should have their heights checked after welding. The shell VI lower is placed in fixture E-5021, and the 12 heat exchanger sleeves, the two fuel drain pipes, and the four thermocouple bosses are aligned and welded. The shell is then removed from the fixture, is final-machined, and is metallurgically and dimensionally inspected. A predetermined amount of extra stock is left at the equator for weld shrinkage.

The accepted shell is repositioned on fixture E-5021, and the modified sweeping fixture (see Fig. 29) is installed. The shell VI lower is marked for placement of the cermet. When properly positioned, the first layer of cermet is spot-welded to shell VI, and the procedure is repeated for the two succeeding Cu-B_4C layers. The cermet is designed so that the gaps between adjacent segments will not coincide with the gaps of succeeding layers; thus any continuous gap or neutron "window" is avoided.

After installation of the Cu-B_4C, the top layer of the cermet is swept, and this data is retained for comparison with that for the shell V lower. This shell is positioned over the cermet, and its outside contour is checked. By comparing the two sets of data, the cermet-to-shell clearance, which should be 0.045 ± 0.010 in., can be obtained. Shell V lower is welded to shell VI lower, and the contour is rechecked. If the clearances are acceptable, the weldments are given a metallurgical evaluation and then vacuum-tested. The cavity is filled with helium to a pressure of 5 psia and then pinched off and seal-welded.

By the use of the modified sweeping fixture, the tile-can locations are marked and the cans are placed around the inside periphery of shell VI. When the cans are positioned and interferences are eliminated, the cans are spot-welded to the shell. The tiles are placed in their respective cans and are covered with the lids. The outside surface of the lids is swept to determine high

[redacted]

ORNL-LR-DWG 24938

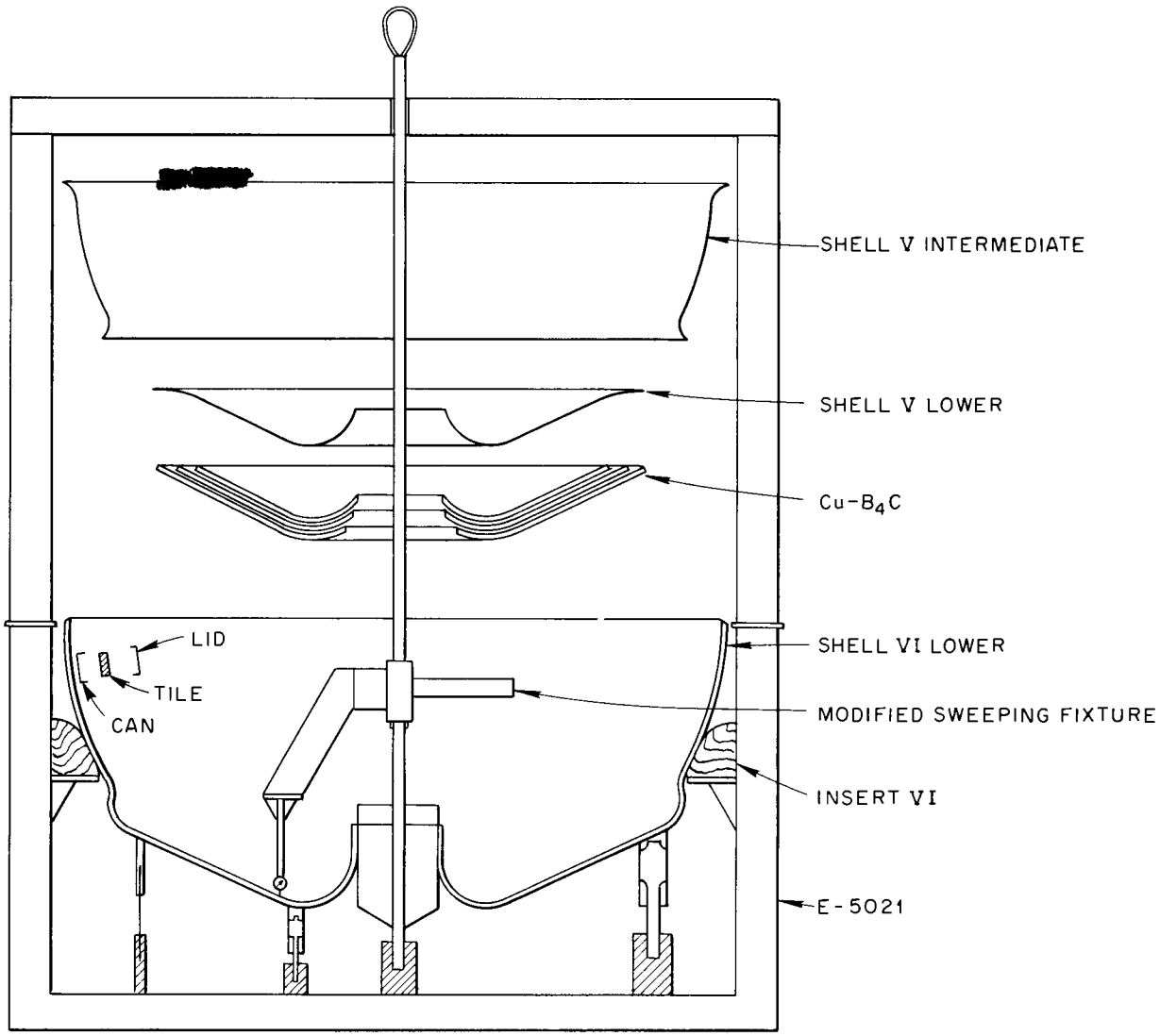

Fig. 29. South Liner Assembly.

and low spots. As is the case of all neutron-shielding installation, the high and low spots can be compensated for by the addition of shim stock under the can lids. Careful consideration should be exercised in the placement of shim stock, since a poorly placed shim could result in excessive localized pressure on the shell when the reactor is in operation. The shell V intermediate is installed, and it is positioned and welded to shell VI lower. The thermal shield must be in place before the shell V intermediate is welded. It is not possible to allow for weld shrinkage on shell V. After welding, the weldments are given a metallurgical inspection and a dimensional check. There should be a lid-to-shell clearance of 0.039 ± 0.002 in. The weldments are vacuum-tested, and the cavity is filled to 5 psia with helium. Finally, the thermal shield, D-5827, is positioned and welded.

Attachment of Island to South Liner

With the south liner still resting in fixture E-5021, the modified sweeping fixture is removed, and, with lifting rod LR-201 threaded into a

plate which bears against the bottom of the island beryllium, the island assembly is lifted and placed, with zero weld clearance, over shell VI lower (see Fig. 30). The lifting rod, through bushings at the top and bottom of fixture E-5021, holds the island beryllium in the radial center of the assembly. The tacking belt (smaller belt in Fig. 26) is installed around the shell I–shell VI junction, and the two parts are tack-welded together. The tacking belt is removed, and the weldment is completed. The weld is inspected metallurgically and dimensionally, and the position and contour of the shells adjacent to the weld region are checked. This completes the island–south liner assembly (see Fig. 31). Removal of the lifting rod, the heat exchanger sleeve

[redacted]

ORNL-LR-DWG 24939

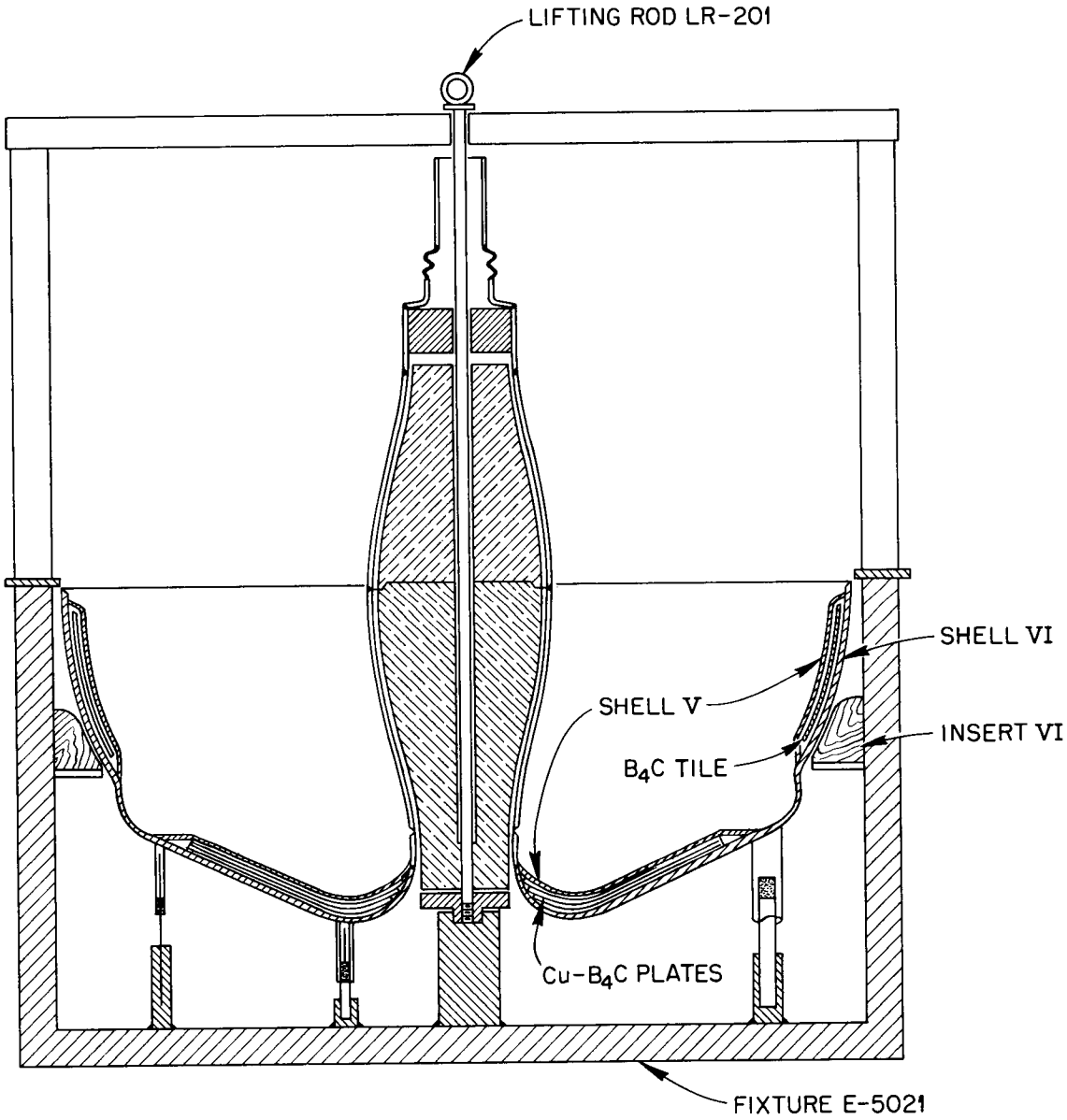

Fig. 30. Installation of Island in South Liner.

guides, and the top cross member of fixture E-5021 prepares the assembly for installation in the partially completed reactor.

Installation of Island–South Liner

The strap from around the main heat exchangers is removed (see "Fitting of Main Heat Exchangers," this report), and the partially assembled reactor is carefully lowered onto the island–south liner assembly (see Fig. 32). The two segments of shell VI are gapped $\frac{1}{8}$ in., the locating pins for the heat exchangers are installed, and, by use of the specified welding procedure, the equatorial weld joining these two halves is

ORNL-LR-DWG 24940

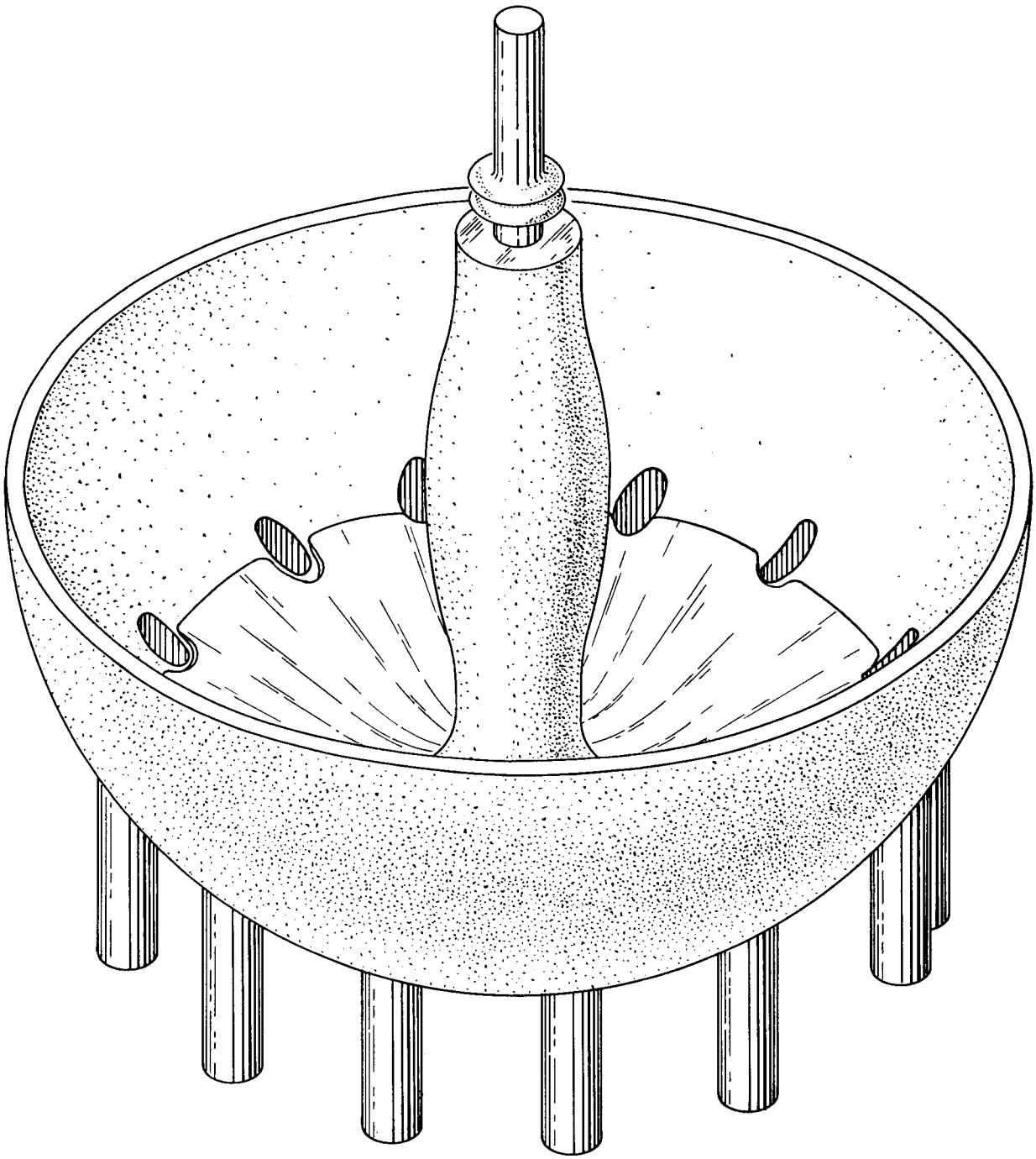

Fig. 31. Island–South Liner Assembly.

[redacted]

ORNL-LR-DWG 24941

[redacted]

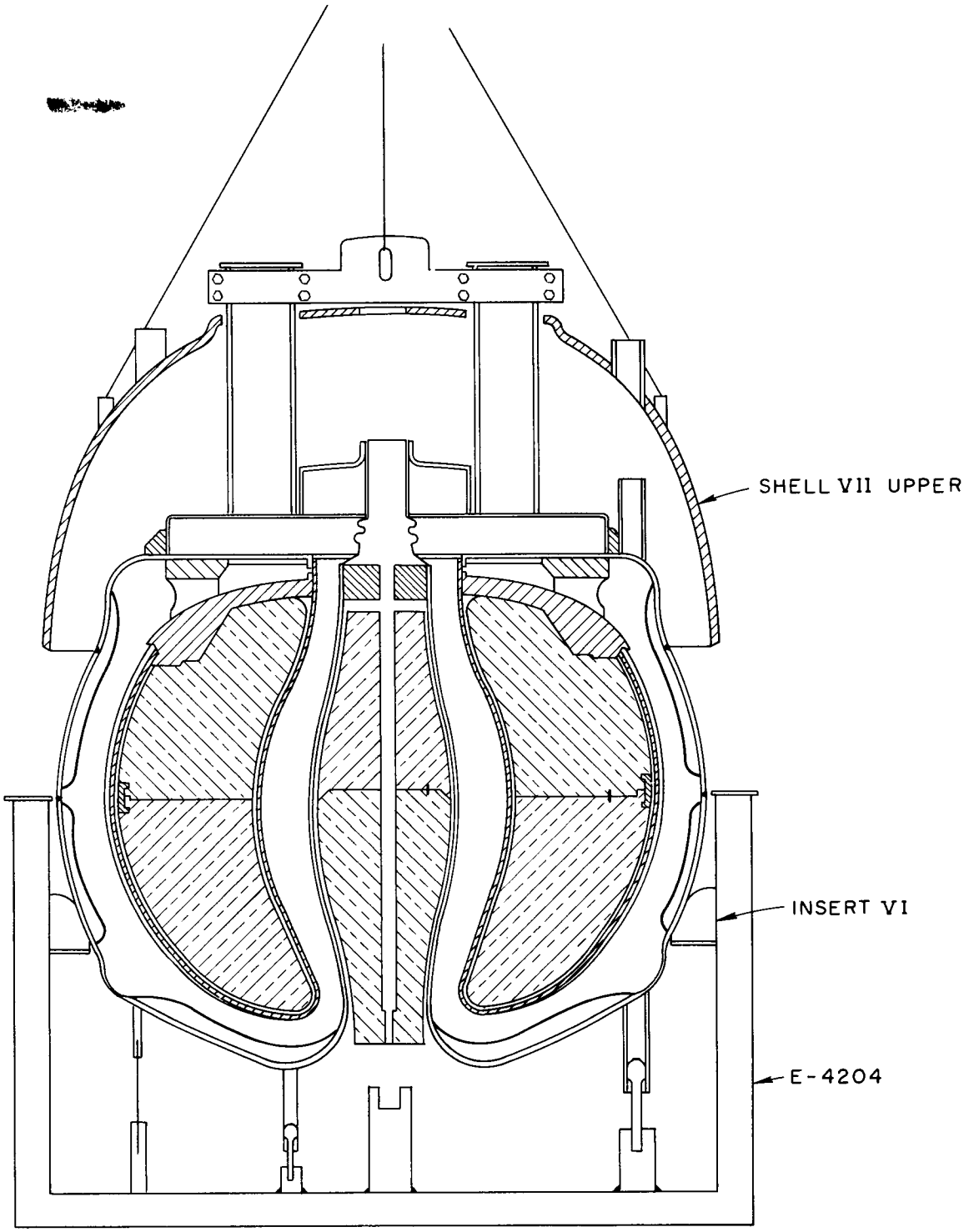

Fig. 32. Installation of Island–South Liner Assembly.

made. A tacking belt is necessary to orient the two halves for welding. It is very important that not more than 200 lb be transmitted, at any time, to the shell VI lower. After welding, the transverse shrinkage between gage marks is checked, and the concentricity of shell VI is determined as accurately as possible.

Shell VII upper is then lowered until it is resting in the proper position on top of the north head. Next, the guide tube is positioned with respect to the north head and welded. Finally, the 12 main heat exchanger inlet and outlet pipes are positioned and are welded to the sleeves in the north head and shell VI lower, respectively. It is essential that the distance between center lines of adjacent main heat exchanger pipes be held to close tolerances in order to ensure a proper fit with the NaK manifolds. The weldments are then given a metallurgical inspection, and are vacuum-tested because radiography would probably be inconclusive. The vacuum pump is connected to either the fuel-pump barrels or to the fuel drain lines (the remaining openings are plugged), and as many weldments as possible are vacuum-tested. The scope of the test includes detection of any leaks from the following:

1. main heat exchangers,
2. shell I,
3. shell VI,
4. north head heat exchangers,
5. shell II,
6. parts external to the north head,
7. shell IV.

If an initial indication is observed before the "probe" is started, a leak from shell V is indicated. A properly organized leak test at this point will conclusively prove whether the fuel system is leak-tight.

The island–south liner assembly weighs 895 lb and increases the cumulative weight of the partially assembled reactor to approximately 10,556 lb.

FILLER PLATES

The filler plates, F-5012, when received for assembly, are individually machined; they are then bolted together, and the inside and outside contours are formed (shown inverted in Fig. 33).

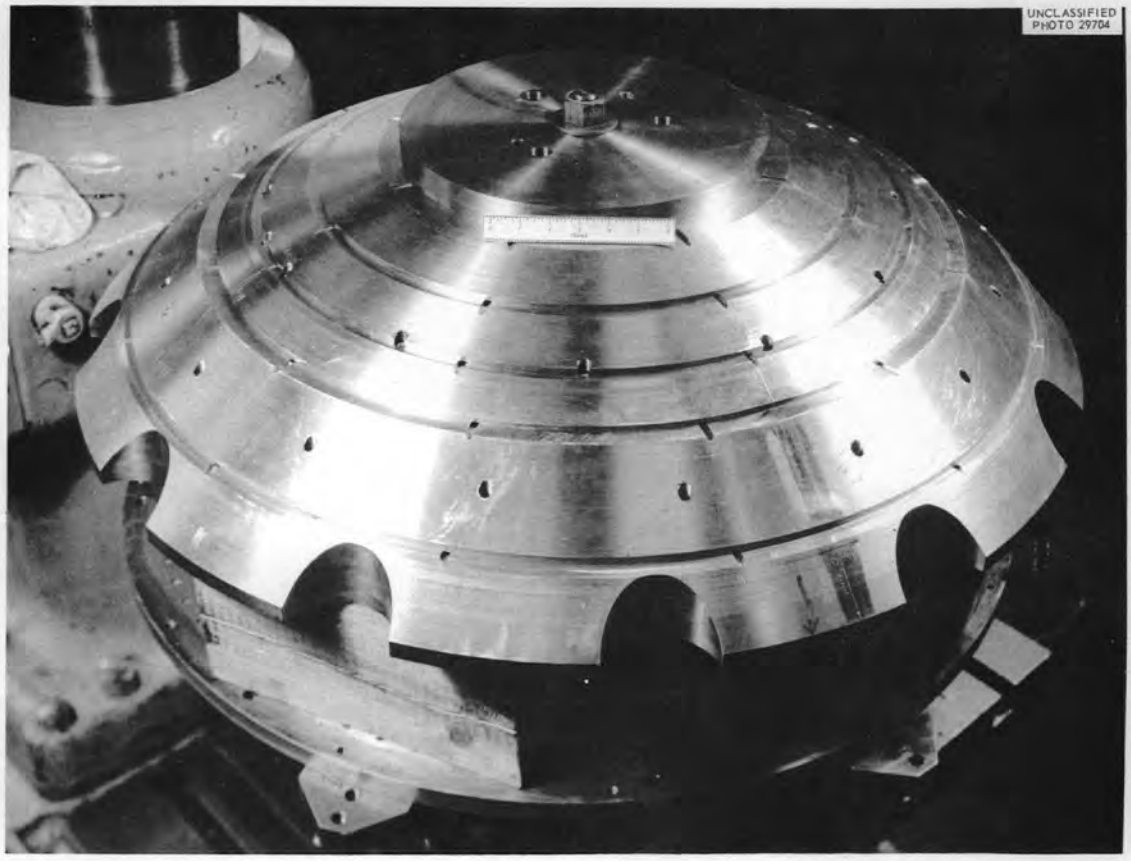

Fig. 33. Filler Plate Assembly.

After finish-machining of the inside and outside contours, the spacers are welded on, and they, in turn, are machined to the specified drawing tolerances. Filler plate No. 6, D-6619 (Fig. 34), is separately machined to drawing tolerances. Metallurgical inspection is not required for the filler plates; however, sufficient dimensions should be checked in order that interferences with adjacent parts will be detected. The filler plates will weigh approximately 247 lb.

SHELL VII LOWER

The shell VII lower, F-2269, is machined inside and outside to drawing tolerances, and the machining bosses, main heat exchanger sleeves, and fuel drain sleeves are welded in place. A

[redacted]

ORNL-LR-DWG 24942

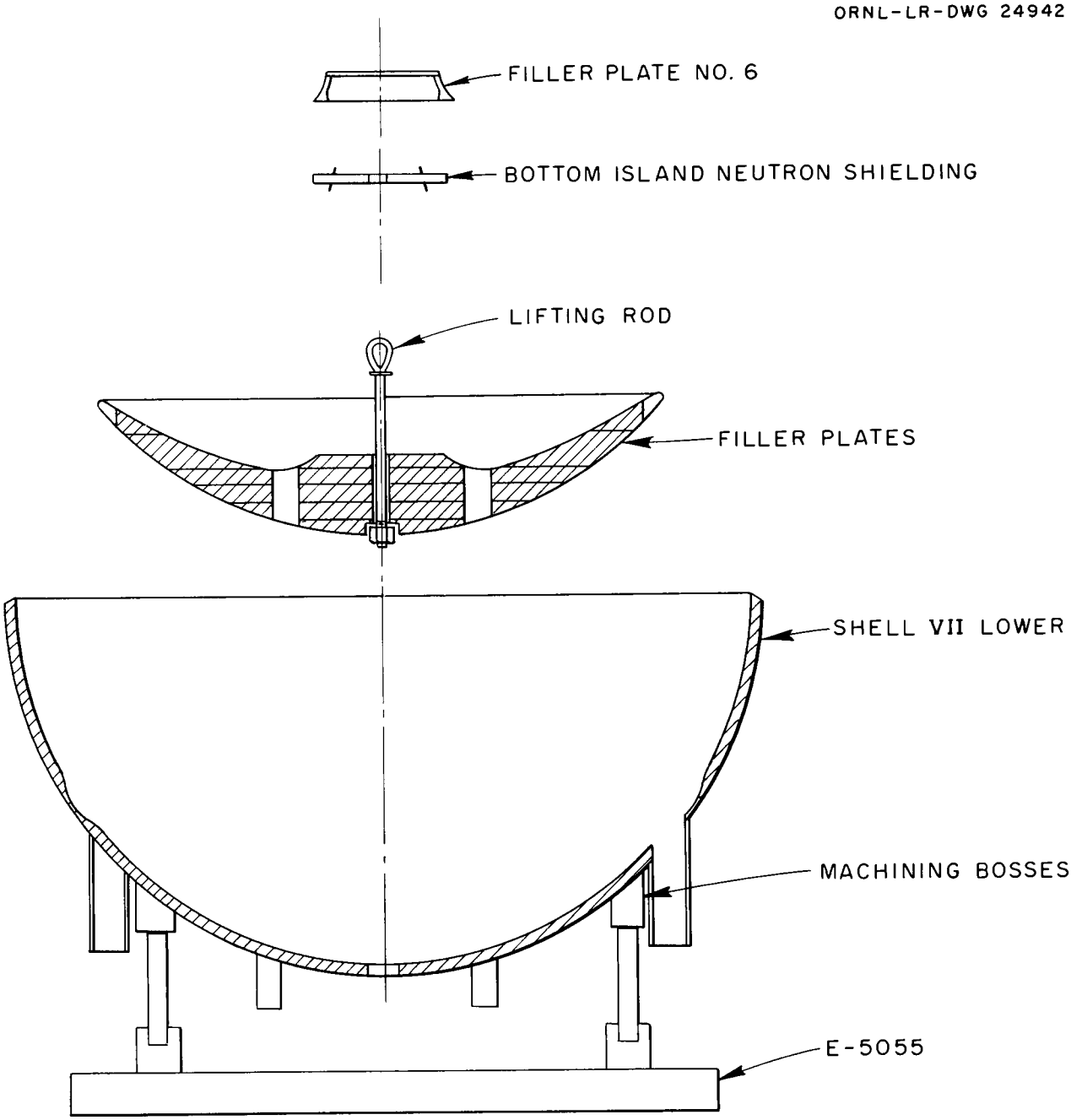

Fig. 34. Installation of Filler Plates in Shell VII Lower.

$2\frac{1}{2}$-in. hole is drilled and tapped in the bottom of the shell for the island positioning tools, and 0.100 in. of extra stock is left at the equator for weld shrinkage. The assembly is then given a metallurgical and dimensional inspection.

The bottom-island neutron shielding can is assembled, and after being evacuated is pressurized with 5 psia of helium. With the shell VII lower supported, by the machining bosses, on fixture E-5505, the lifting rod is inserted through the center hole of the assembled filler plates, and they are carefully lowered into the shell VII lower (see Fig. 34). The filler plates are oriented with respect to the openings for the main heat exchangers and the fuel down-drain lines. The lifting rod is removed, and the neutron shielding and filler plate No. 6 are installed.

The tie bolt, C-4259, and the locating pin at the bottom of the island beryllium are installed, and the partially assembled reactor described in the section, "Island–South Liner Assembly," is carefully lowered onto the filler plates and shell VII (see Fig. 35). The shell VII equatorial joint is gapped $\frac{1}{8}$ in., the tacking belt is installed, and the two shell halves are tack-welded. The tacking belt is then removed and the weldment completed. Each pass of the equatorial weld is given a visual and dye-penetrant examination. After welding, the weld shrinkage is checked by observing the distance between gage marks.

It is very important that not more than 200 lb be transmitted to the shell VI lower. Therefore most of the reactor weight must be supported by the crane until after the fuel pump barrel sleeves are welded to the shell VII upper. The outside contour of shell VII is checked, and on this basis the data for the inside contour is recalculated. This data is compared with that for shell VI (after welding), and the spacer-to-shell clearance is computed. The acceptable clearance is 0.010 ± 0.002 in. The shell VII lower weighs approximately 1843 lb.

In the next step the filler plate–shell VI lower clearance is checked. Since the clearance between the lower beryllium and filler plate No. 6 is less than 0.040 in., it is necessary that, initially, a lifting rod be inserted into the control-rod hole and threaded into the tie bolt, and that the island beryllium be lifted until contact is made with the shell I upper. The island beryllium remains in this position throughout the period in which the filler plate clearances are checked. Since the filler plates are resting on the shell VII lower, an acceptable clearance is any value between 0 and 0.040 in. In order to check this clearance, part *A* is inserted (see Fig. 36) through the hole in the bottom of shell VII, and then by using a hydraulic jack resting on a scale, the filler plates are elevated until the scales indicate the weight of the filler plates plus 200 lb. The amount of travel is noted and is indexed from part *A* by means of a dial indicator.

The island may be positioned either now or at a later stage (see the next section, "Vertical Alignment of Island").

The fuel pump barrel sleeves, north head, instrument lines, drain line sleeves, and heat exchanger sleeves are welded to shell VII. The lifting fixtures are removed and the total weight of the reactor is allowed to rest on fixture E-5055. The sides of the sodium expansion tank (Fig. 37) are aligned with and are welded to pressure shell VII; then the two expansion sleeves, B-5137, are welded to shell VII, and the two sodium distribution bellows, C-6335, are welded to the expansion sleeves.

Weldment N, the inner wall sodium expansion tank, C-5134, is assembled separately and includes the two sodium distribution bellows and two elbows. The insulation cavity is evacuated and then filled with helium to 5 psia. All weldments are inspected, and the subassembly is checked dimensionally for interferences. The subassembly is aligned with and welded to the north head and to the distribution header. It is very important that the subassembly be concentric with the center line of the reactor (after welding), if interference between the control-rod thimble and the mating parts is to be eliminated. Furthermore, since all parts must be clean, it is not advisable to machine them after welding. The adapter, B-5067, is located and is welded to pressure shell VII, and the expansion loop, C-5066, is located and is welded to the adapter.

The sodium expansion tank top, E-5064, is fabricated as a subassembly and includes the instrument bosses welded and machined in their proper positions. The tank top will probably have to be hand-fitted to the tank sides before a satisfactory weld preparation is obtained. The tank top is positioned and is welded to the tank sides and to the inner wall half. Finally, the expansion loop is welded to the tank top and is covered with the plate, B-5065, which is also

[redacted]

ORNL-LR-DWG 24943

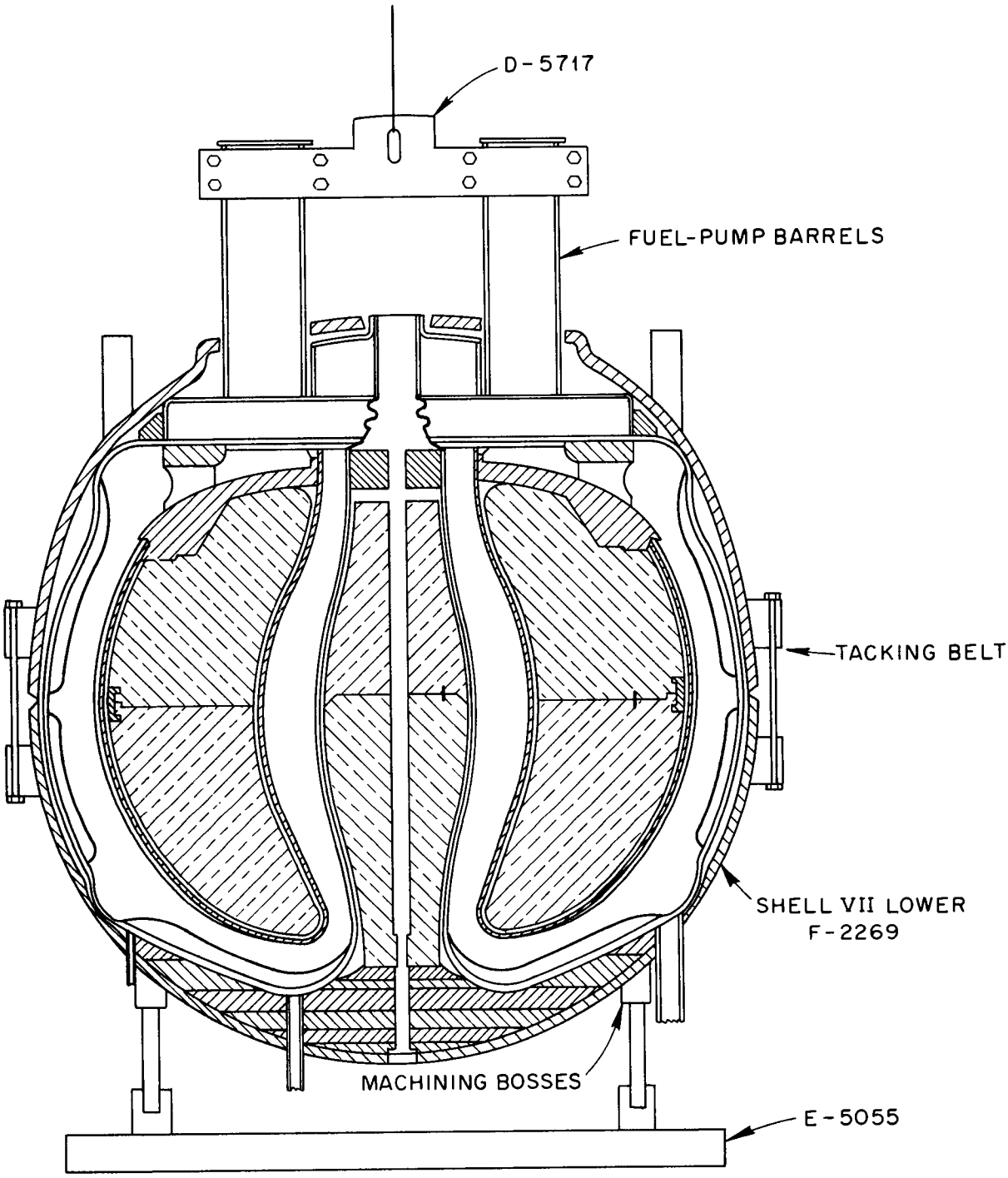

Fig. 35. Shell VII Installation.

welded to the top. This completes the expansion tank installation.

VERTICAL ALIGNMENT OF ISLAND

The following is a procedure positioning the island beryllium with respect to the equator; this work could just as easily have been performed after the filler plate–shell VI lower clearance was checked. The method described here and the tools shown on the figures are approved redesigns, instigated because the original concept employed a hidden nut and bolt arrangement. If this had become inoperative before the island was properly positioned, corrective action would have necessitated severance of the shell VII equatorial weldment. The revised method substitutes a simple

[redacted]

[redacted]

ORNL–LR–DWG 24944

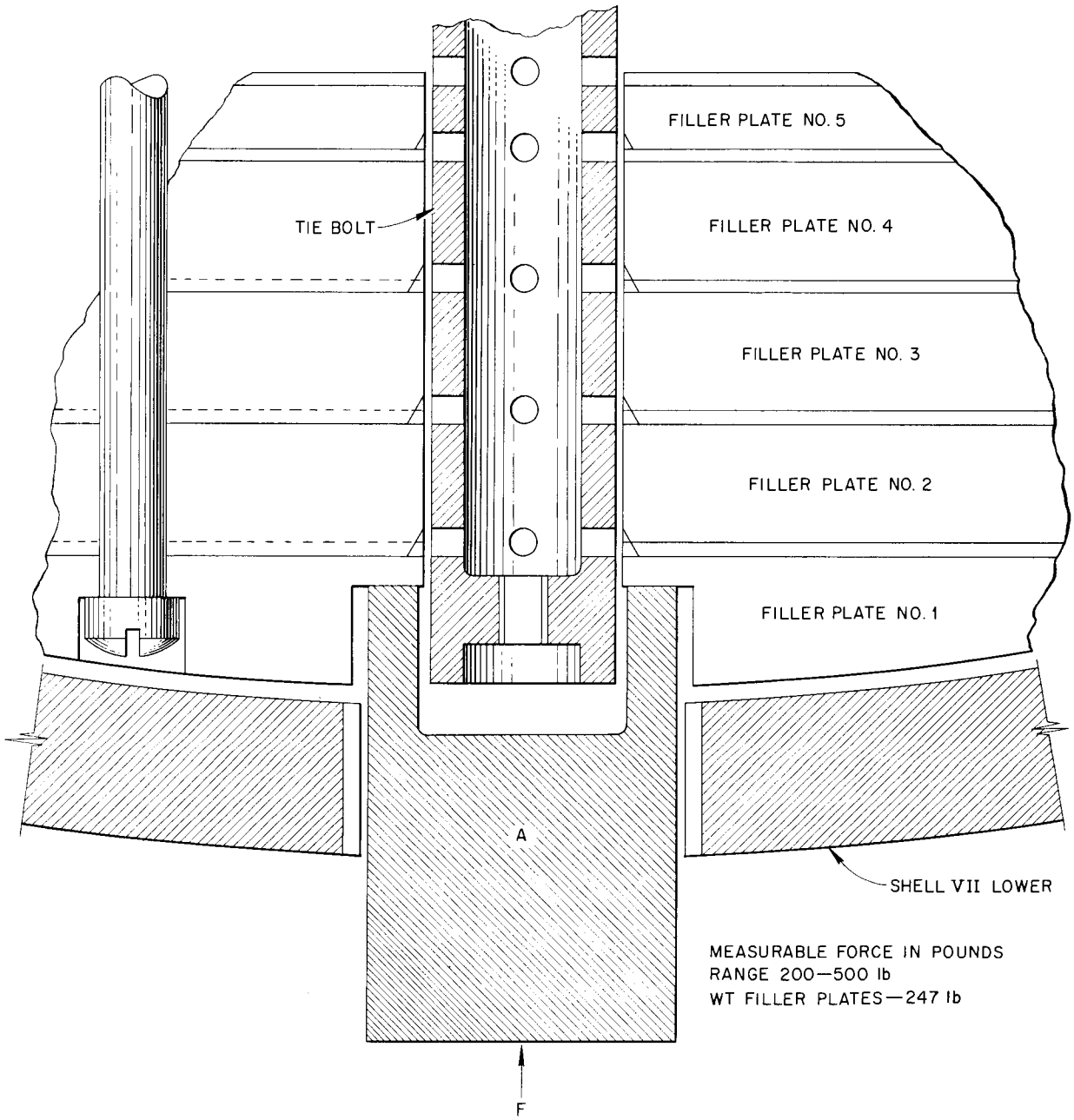

Fig. 36. Filler Plate Clearance Checking Fixture.

plug and plunger, which can be removed locally at any time during the procedure.

Part *B* (Fig. 38) is advanced through the threaded hole on the bottom of the shell VII lower, until it makes contact with the bottom of the tie bolt. Part *C* is inserted through part *B* until the slot on the bottom of the tie bolt is engaged. At this point the lower beryllium spacers are in contact with the shell I lower. The jack and the scales are placed under part *C*, and then a dial indicator is clamped around the part in such a manner that the relative motion between parts *C* and *B* can be noted. Pressure is applied to the bottom of part *C* until the scales show twice the weight of the island beryllium. The upper beryllium spacers are now in contact with the shell I upper.

[redacted]

[redacted]

ORNL-LR-DWG 24945

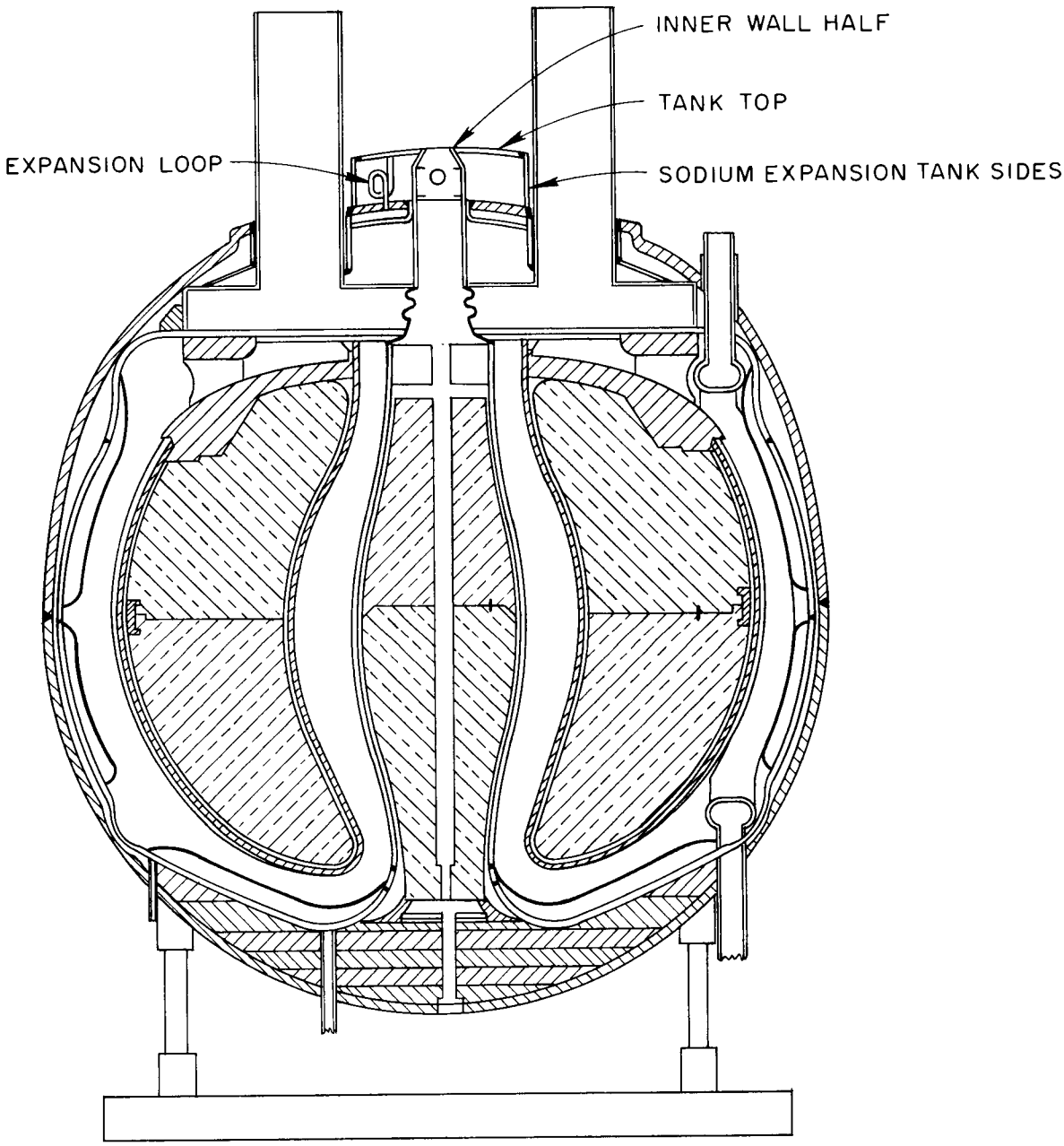

Fig. 37. Sodium Expansion Tank Installation.

[redacted]

ORNL-LR-DWG 24946

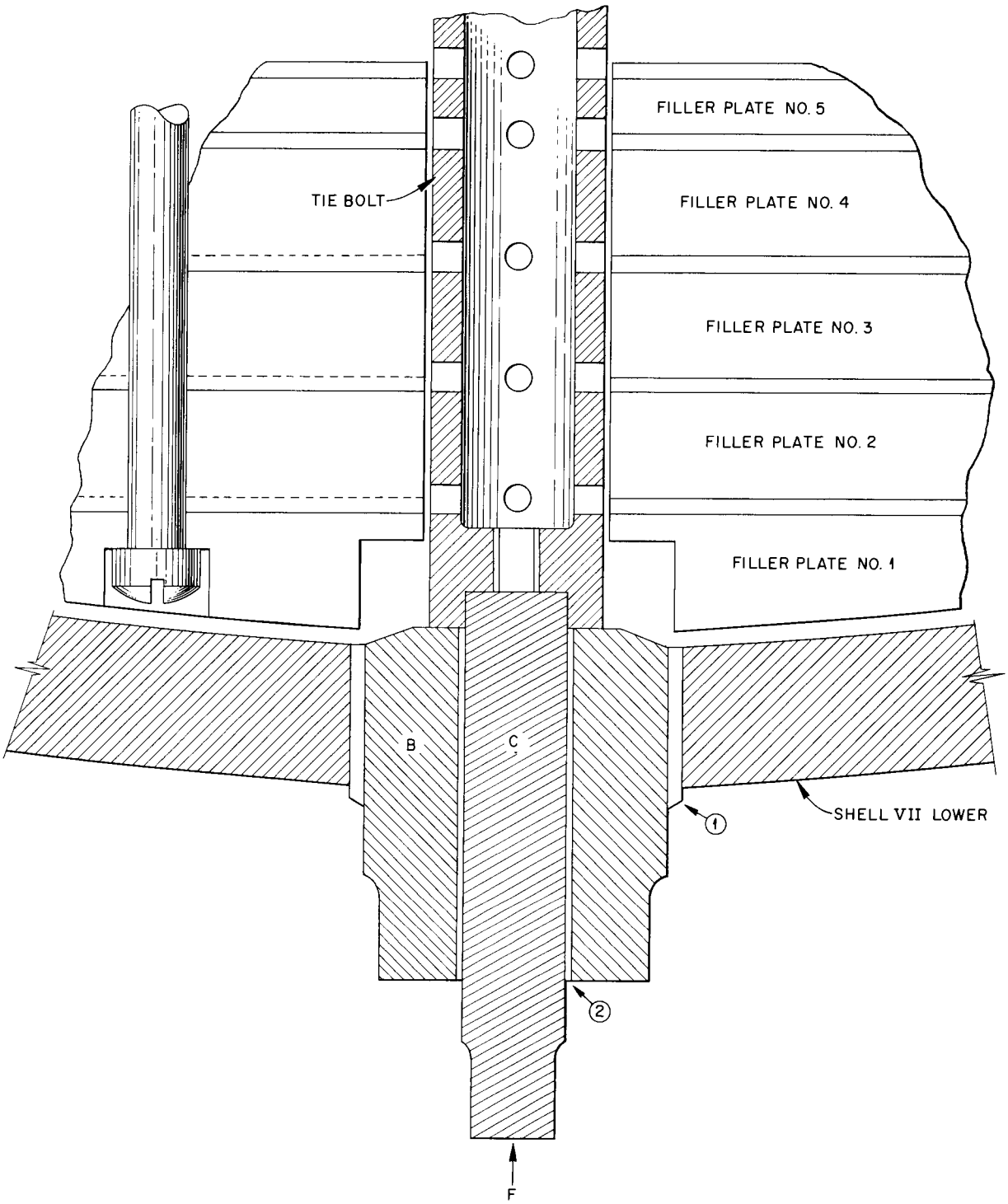

Fig. 38. Island Positioning Mechanism.

In order to set the equator of the beryllium in the equatorial plane of the reactor, part *B* is advanced until the dial indicator reads one-half the total travel; then the force on part *C* is released, and the tie bolt is allowed to rest on part *B*. Part *B* is then seal-welded to shell VII at point 1, and part *C* is seal-welded to part *B* at point 2.

In order to complete the reactor assembly (shown in Fig. 39), the control-rod thimble, D-4846, is inserted into the island to the proper depth, and the thimble is welded at the top to the inner wall half. The assembled reactor weighs 12,646 lb. This value does not include the weight of rotating pump parts, the control-rod actuating mechanism, manifolds, lead and water shielding, and the auxiliaries which are outside the scope of this procedure.

PREOPERATIONAL TESTS

It is necessary to make certain that there is no external or cross-leakage within the completed reactor. The best method of establishing leak-tightness is a well-organized and properly conducted vacuum test. The fuel system will have been previously vacuum-tested (see section entitled "Island–South Liner Assembly"), thus making it necessary to evacuate and leak-test only the sodium system. Special consideration should be given to cross-leakage from fuel to sodium passages. Although it is not possible to isolate and make repairs (without disassembly) on leaks other than those external to pressure shell VII, the leak test will establish whether or not the reactor is suitable for operation.

The second test is a check of all thermocouples for damage during installation. It is not possible to completely pre-bend and pretest all thermocouples, because several field bends must be made during installation.

Strain-gage measurements are taken prior to installation of the completed reactor in the cell housing, and 104 strain gages are affixed to the external surface of the reactor. All readings are taken at room temperature and can be categorized as follows:

Lift Strain Measurements (40 Gages). – The components tested are the sodium pump barrels, fuel pump barrels, and dormers. The method consists of alternately suspending and resting the reactor and taking readings under each condition.

Pressure Strain Measurements (47 Gages). – Various places on the shell VII upper and lower and on the sodium expansion tank top are tested. The reactor is suspended, and data are taken alternately when the systems are at atmospheric and at 85 ± 5 psig pressure.

Calibration Strain Measurements (17 Gages). – These measurements are made concurrently with the first two.

The strain gages are attached by means of a special glue, which must set for a minimum of 2 hr or, preferably, 24 hr before the bonded gages are disturbed.

[redacted]

ORNL-LR-DWG 24947

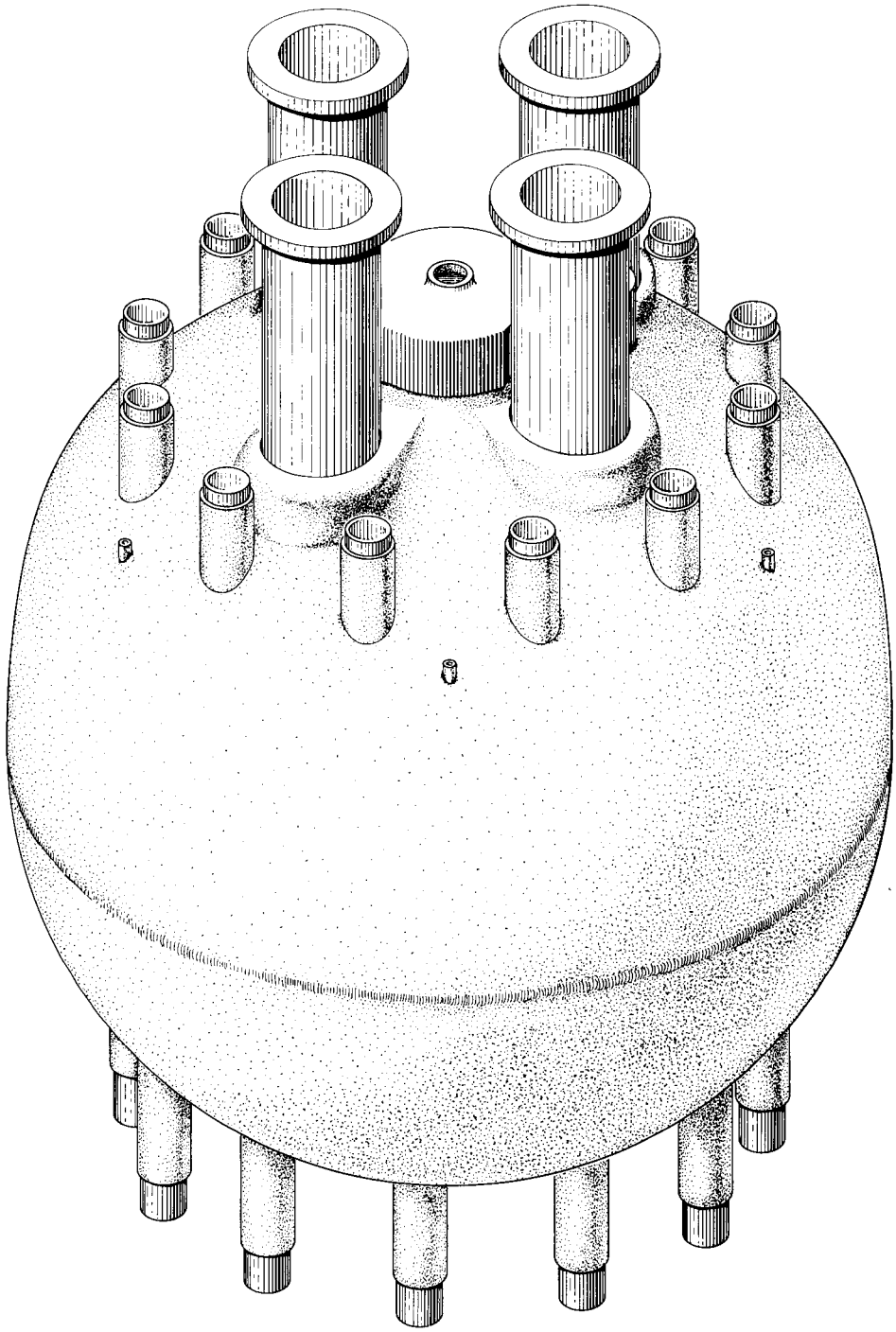

Fig. 39. Assembled Reactor.

DETAILED PARTS LIST

The following is an itemized list of finished parts required for assembling one reactor. This list does not include tools, rotating pump parts, or any parts external to the pressure shell and the sodium expansion tank.

Drawing No.	Quantity	Description
Shell II assembly, E-4218		
D-4212	1	Shell II lower
D-4213	1	Shell II upper
D-4214	1	Collar (may be part of 4213)
Beryllium reflector		
F-4225	1	Hemisphere south
F-4219	1	Hemisphere north
B-4220	660	Spacer
B-4307	1320	Bushing
B-4228	1	Pin, hemisphere index
E-4230	1	Clamp (8 segments)
Drain tube assembly, C-4379		
C-4378	1	Drain tube
B-4376	1	Sleeve stop
B-4375	6	Spacer
B-4377	1	Stop
Clip assembly drain and thermocouple tube, B-4323		
B-4390	1	Clip
B-4386	2	Sleeve
Clip assembly (thermocouple), B-4324		
B-4391	1	Clip
B-4386	1	Sleeve
Circular can assembly, B-4394		
B-4402	2	Can bottom
B-4411	2	Evacuating tube
B-4404	2	Tile disk (Cu-B_4C)
B-4403	4	Tile disk (Cu-B_4C)
B-4401	2	Can top
B-4997	6	Boss can
B-4998	2	Boss evacuating tube
B-4252	6	Clip, circular can
B-4251	6	Bolt ($\frac{1}{4} \times 0.438$ in.)
Spacer ring assembly, D-5532		
D-4304	1	Upper cover
D-4261	1	Lower cover
B-5643	8	Bushing

Drawing No.	Quantity	Description
Spacer ring assembly, D-5532		
B-5656	16	Spacer (type 430 stainless steel)
D-5527	1	Slotted plate
D-5528	1	Bottom plate
B-5530	1	Boss evacuating tube
C-5651	8	Tile spacer ring
C-5652	3	Tile spacer ring
C-5653	2	Tile spacer ring
C-5654	2	Tile spacer ring
C-5655	1	Tile spacer ring
B-5533	2	Dowel stud
Insulating can assembly, D-5647		
C-5646	1	Top insulating can
C-5644	1	Divider insulating can
C-5645	1	Bottom insulating can
B-5535	18	Spacer (type 430 stainless steel)
C-5531	1	Wire spacer, outer
C-5545	1	Wire spacer, inner
C-5534	18	Copper cermet
Standard	As required	Fiberfrax, type SXW
B-4998	1	Boss evacuating tube
B-4411	1	Tube, evacuating
Conical can assembly, F-4393		
F-4396	1	Can top
C-4398	6	Copper cermet
C-5609	2	Copper cermet
C-4415	2	Copper cermet
C-4412	2	Copper cermet
C-4399	6	Copper cermet
D-4423	2	Copper cermet
D-4413	2	Copper cermet
C-4420	2	Copper cermet
C-4400	2	Copper cermet
D-4421	2	Copper cermet
D-4416	2	Copper cermet
C-4414	2	Copper cermet
F-4397	1	Can bottom
B-4411	1	Evacuating tube
B-4998	1	Boss evacuating tube
B-5512	4	Clip, conical can
B-4351	4	Bolt ($\frac{1}{4}$-20 × 0.438 in.)
B-4221	12	Spacer
B-4222	6	Spacer
Outer beryllium spacers		
B-4232	320	Pin, spacer guide
B-5609	292	Pin, spacer guide
B-4308	74	Bushing

Drawing No.	Quantity	Description
Outer beryllium spacers		
B-4227	37	Spacer
B-4233	64	Outer spacer, upper
B-4234	64	Outer spacer, lower
Load ring—shell III upper subassembly, F-4290 and F-4292		
E-2272	1	Shell III upper
C-4255	1	Strut ring
C-4270	2	Strut
C-4269	2	Strut
C-4271	2	Strut
C-4268	2	Strut
C-4272	2	Strut
C-4267	2	Strut
C-4274	2	Strut
C-4273	2	Strut
C-4266	2	Strut
C-4275	2	Strut
C-4265	2	Strut
C-4264	2	Strut
C-4276	2	Strut
C-4263	2	Strut
C-4277	2	Strut
F-4283	1	Load ring
C-4284	1	Pipe outlet
C-4264	1	Pipe outlet
B-4281	1	Vent tube assembly
C-4262	1	Pipe outlet
C-4381	2	Thermocouple tube assembly
B-5538	6	Pin assembly, locating
B-5537	6	Pin, locating
D-5540	2	Outlet copper cermet
D-5541	6	Top copper cermet
D-5542	2	Top copper cermet
D-4285	1	Cover plate
B-4286	2	Cu-B_4C pipe jacket, outlet
B-4287	2	Cu-B_4C jacket cover, outlet
C-4309	2	Strut extensions
D-4291	1	Conical divider
C-4405	2	Return pipe
D-4406	2	Pan face
D-4407	2	Pan rim
B-4389	2	Clip, assembly thermocouple
B-5539	6	Pin, locating
D-4409	2	Copper cermet rim
D-4408	2	Copper cermet face
D-4410	2	Cover
B-4411	2	Evacuating tube
B-4998	2	Boss evacuating tube

Drawing No.	Quantity	Description
Load ring—shell III upper subassembly, F-4290 and F-4292		
B-4383	2	Thermocouple assembly
B-5547	6	Washer load ring
B-5546	6	Bolt load ring
B-5548	6	Plug load ring
Shell III lower assembly		
D-4293	1	Shell III lower
E-2273	1	Adapter spur
Reflector tile, cermet, cans, and lids		
B-4315	34	Copper cermet
B-4316	34	Copper cermet
B-4317	17	Copper cermet
C-4318	34	Copper cermet
C-4319	34	Copper cermet
B-4320	34	Copper cermet
B-4321	34	Copper cermet
B-4329	51	Tile
B-4332	102	Tile
C-4335	102	Tile
B-4338	102	Tile
C-4341	102	Tile
C-4344	102	Tile
C-4345	51	Tile
C-4350	51	Tile
C-4353	51	Tile
C-4356	34	Tile
C-4359	34	Tile
C-4362	34	Tile
C-4328	51	Can
C-4331	102	Can
C-4334	102	Can
C-4337	102	Can
C-4340	102	Can
C-4343	102	Can
C-4346	51	Can
C-4349	51	Can
C-4352	51	Can
C-4355	34	Can
C-4358	34	Can
C-4361	34	Can
C-4327	51	Lid
C-4330	102	Lid
C-4333	102	Lid
C-4336	102	Lid
C-4339	102	Lid
C-4342	102	Lid
C-4347	51	Lid

Drawing No.	Quantity	Description
Reflector tile, cermet, cans, and lids		
C-4348	51	Lid
C-4351	51	Lid
C-4354	34	Lid
C-4357	34	Lid
C-4360	34	Lid
B-4326	1	Equatorial weld band
Shell IV		
E-2274	1	Shell IV upper
E-2275	1	Shell IV lower
Main heat exchangers		
F-4124	12	Layout, main heat exchanger
Island assembly		
F-4907	1	Beryllium top island
B-4307	384	Bushing
B-4220	192	Spacer
C-4952	1	Can top
C-4953	1	Can bottom
B-4940	3	Copper cermet top island
B-4997	6	Boss can
B-4998	1	Boss evacuating tube
B-4411	1	Tube, evacuating
D-4902	1	Cap, top island
F-4915	1	Beryllium bottom island
B-4307	444	Bushing
B-4220	222	Spacers
B-4913	1	Pilot bushing
E-2265	1	Shell I upper
E-2264	1	Shell I lower
C-5517	1	Expansion joint
C-5520	1	Guide tube
C-5524	1	Sleeve guide tube
Insulation	As required	Fiberfrax, type SXW
B-4411	1	Evacuating tube
C-5521	1	Guide tube cone
C-5518	1	Bellows skirt
C-5523	1	Vane mount (shell I extension)
Tie bolt		
C-4259	1	Tie bolt
B-4305	1	Locking screw
South liner assembly		
F-2267	1	Shell VI lower
C-4918	12	Pipe sleeve (MHE)
B-4909	4	Thermocouple sleeve extension
B-4919	4	Thermocouple sleeve
C-4917	2	Fill and drain pipe
C-4951	1	Copper cermet
C-4957	7	Copper cermet

Drawing No.	Quantity	Description
South liner assembly		
C-4962	1	Copper cermet
C-4958	7	Copper cermet
C-4960	1	Copper cermet
C-4982	1	Copper cermet
C-4959	7	Copper cermet
C-4961	1	Copper cermet
C-4983	1	Copper cermet
C-4984	12	Copper cermet
C-4987	12	Copper cermet
C-4985	12	Copper cermet
C-4988	15	Copper cermet
C-4986	12	Copper cermet
C-4989	15	Copper cermet
C-4260	1	Shell V lower
B-4998	1	Boss evacuating tube
B-4411	1	Evacuating tube
C-4967	55	Tile
C-4968	55	Can
C-4969	55	Lid
C-4970	55	Tile
C-4971	55	Can
C-4972	55	Lid
C-4973	55	Tile
C-4974	55	Can
C-4975	55	Lid
C-4976	55	Can
C-4978	55	Lid
C-4979	55	Tile
C-4980	55	Can
C-4981	55	Lid
D-2279	1	Shell V intermediate
B-4411	1	Evacuating tube
North head weldment *A*, F-2745		
E-2746	1	Lower deck
C-2747	1	Seal ring
D-2786	2	Outer ring half
D-2771	2	Heat exchanger wall
B-4838	101	Pillow block
North head weldment *B*, D-3714		
D-2749	2	F-scroll plate
D-2753	2	F-plenum plate
C-2754	2	F-throat plate
E-2750	1	Upper outer deck
C-2589	2	Corner upper outer deck
B-2763	2	S-baffle vane
B-2764	2	S-baffle vane
E-2590	2	Cooling baffle assembly

Drawing No.	Quantity	Description
North head weldment *C*, F-2586		
F-2759	2	Upper outer deck
E-2770	2	S-chamber guide vane
E-2826	1	F-wall assembly
North head weldment *E*, F-2587		
C-2751	2	F-barrel skirt
F-2756	1	F-expansion tank top
C-2768	2	Outer return tube
E-4106	1	Lower deck skirt
North head weldment *G*, E-3715		
D-2760	2	S-scroll wall
E-2762	2	S-cone, lower
E-2761	2	S-cone, upper
D-5047	2	S-volute nose
North head weldment *J*, E-3716		
C-2790	2	F-pump barrel
C-2793	2	F-barrel wall
B-4827	2	Pump barrel dowel
D-2787	12	F-heat exchanger expansion nipple
E-4899	1	Locating pin
Shell VI upper		
F-4735	1	Shell VI upper
D-4954	18	Copper cermet
D-4955	18	Copper cermet
D-4956	18	Copper cermet
Shell V upper		
E-3718	1	Shell V upper
B-4411	1	Evacuating tube
Miscellaneous north head parts		
C-2802	2	F-level indicator nipple
D-2807	2	S-volute elbow
C-5034	2	S-elbow pipe
B-4990	2	S-elbow divider
C-5036	2	S-elbow channel
C-5035	2	S-elbow weir
C-4896	2	S-elbow, top
C-6335	2	S-distribution bellows
Shell VII upper assembly, F-2792		
F-2799	1	Shell VII upper
D-2797	232	Displacement pads
C-4109	4	Positioning rods
C-2791	2	S-pump barrel
C-5132	2	S-pump channel

Drawing No.	Quantity	Description
Shell VII upper assembly, F-2792		
B-4827	2	Pump barrel dowel
C-2801	2	H.E. outlet nipple
C-2800	2	H.E. inlet nipple
C-4112	6	Machining boss
C-2798	12	MHE sleeve nipple
B-5501	4	T.C. tube sleeve
B-5502	1	T.C. tube sleeve
B-5503	1	T.C. tube sleeve
C-5504	1	Cluster mount inner half
B-5505	2	T.C. tube weldment
B-5506	2	T.C. tube sleeve
B-5507	2	T.C.
Filler plates, F-5012		
C-5006	1	Plate No. 1
D-5005	1	Plate No. 2
D-5004	1	Plate No. 3
D-5003	1	Plate No. 4
D-5000	1	Plate No. 5
B-5001	6	Spacer
B-5002	6	Spacer
D-6619	1	Plate No. 6
B-6621	3	Keeper
B-6623	3	Dowel
B-6624	3	Machine screw
E-4991	1	Plate No. 7
E-4494	1	Plate No. 8
B-5008	3	Screw
B-5011	23	Screw
B-5007	2	Dowel
B-5010	4	Dowel
C-5013	8	Spacer bottom
B-5014	24	Spacer bottom
B-5015	16	Spacer bottom
C-5016	8	Spacer top
B-5017	24	Spacer top
C-5018	12	Spacer top
C-5019	4	Spacer top
Can assembly bottom island, C-4950		
C-4965	1	Can top
B-4963	3	Copper cermet
C-4966	1	Can bottom
B-4997	3	Boss can
B-4914	3	Boss can
B-6622	3	Boss can bottom island
B-4998	10	Boss evacuating tube
B-4411	1	Evacuating tube

Drawing No.	Quantity	Description
Shell VII lower		
F-2269	1	Shell VII lower
C-4929	12	MHE pipe sleeve
B-4930	12	Sleeve, fill and drain pipe
B-4931	4	Sleeve thermocouple
B-4932	6	Mounting boss
C-5346	2	Outer sleeve fill and drain
Sodium expansion tank weldment *N*, C-5134		
C-4860	1	Weld retaining can
C-5069	1	Retaining can
B-5074	1	Divider ring
B-5071	1	Retaining can ring
B-5135	2	Transition cone
C-5515	1	Inner wall half weldment
C-5072	1	Inner wall half
B-4861	2	Transition cone sleeve
C-5516	1	Inner wall half weldment
C-5072	1	Inner wall half
B-4998	1	Boss, evacuating tube
B-4411	1	Evacuating tube
C-6335	2	S-distribution bellows
B-5136	2	Elbow
Standard	As required	Fiberfrax, type SXW
B-5137	2	Expansion sleeve
B-5067	1	Adapter
C-5066	1	Expansion loop
E-5064	1	Weldment tank top
E-5133	1	Tank top
C-5143	1	Tube half
B-5138	1	Tube half end
B-5144	1	Tube half
C-5142	1	Tube half
B-5141	1	Tube half
B-5140	1	Tube half
B-5139	1	Tube half
B-5145	2	Tube half
B-5146	2	Tube half
B-5147	2	Tube half
B-5148	2	Tube half
B-5149	2	Tube half
B-5150	2	Tube half
B-5151	2	Tube half
B-5152	1	Tube half
B-5153	1	Tube half
B-5154	1	Tube half
B-5155	1	Tube half
F-5131	1	Expansion tank side
B-5065	1	Plate
B-5508	1	Cluster mount outer half
B-5509	1	5-cluster plate

[redacted]

INTERNAL DISTRIBUTION

1. J. W. Allen
2. D. S. Billington
3. F. F. Blankenship
4. E. P. Blizard
5. W. F. Boudreau
6. G. E. Boyd
7. E. J. Breeding
8. R. B. Briggs
9. F. R. Bruce
10. A. D. Callihan
11. C. E. Center (K-25)
12. R. A. Charpie
13. C. E. Clifford
14. J. H. Coobs
15. W. B. Cottrell
16. F. L. Culler
17. D. R. Cuneo
18. J. H. DeVan
19. L. M. Doney
20. D. A. Douglas
21. L. B. Emlet (K-25)
22. A. P. Fraas
23. J. H. Frye
24. W. T. Furgerson
25. R. J. Gray
26. B. L. Greenstreet
27. W. R. Grimes
28. A. G. Grindell
29. E. Guth
30. C. S. Harrill
31. T. Hikido
32. M. R. Hill
33. E. E. Hoffman
34. H. W. Hoffman
35. A. Hollaender
36. W. H. Jordan
37. G. W. Keilholtz
38. F. L. Keller
39. J. J. Keyes
40. R. S. Livingston
41. R. N. Lyon
42. H. G. MacPherso[redacted]
43. F. C[redacted]aienschein
44. W. [redacted]anly
45. E. [redacted]Mann
46. R[redacted] Meghreblian
47. A[redacted]. Miller
48. [redacted]Z. Morgan
49. [redacted] J. Murphy
50. [redacted] P. Murray (Y-12)
51. [redacted]. L. Nelson
52. [redacted]G. J. Nessle
53. [redacted] L. G. Overholser
54. [redacted] P. Patriarca
55. [redacted]. S. K. Penny
56. [redacted]6. A. M. Perry
57. [redacted]57. P. M. Reyling
58. [redacted]58. H. W. Savage
59. [redacted]59. A. W. Savolainen
60. [redacted]0. R. D. Schultheiss
61. [redacted]. J. L. Scott
62. [redacted] E. D. Shipley
63. [redacted] A. Simon
64. [redacted] M. J. Skinner
65. [redacted] A. H. Snell
66. [redacted]E. Storto
67. [redacted]C. D. Susano
68. [redacted] A. Swartout
69. [redacted] B. Trauger
70. [redacted] K. Trubey
71. [redacted] M. Watson
72. [redacted] M. Weinberg
73. [redacted]C. White
74. [redacted]P. Wigner (consultant)
75. [redacted]C. Williams
76. [redacted]. Wilson
77. [redacted]. Winters
78. [redacted]bel
79-80. [redacted] – Y-12 Technical Library, [redacted]ument Reference Section
81-85. [redacted]atory Records Department
86. [redacted]atory Records, ORNL R.C.
87-88. [redacted]l Research Library

[redacted]

[redacted]

EXTERNAL DISTRIBUTION

89-91. Air Force Ballistic Missile Division
92-93. AFPR, Boeing, Seattle
94. AFPR, Boeing, Wichita
95. AFPR, Curtiss-Wright, Clifton
96. AFPR, Douglas, Long Beach
97-99. AFPR, Douglas, Santa Monica
100. AFPR, Lockheed, Burbank
101-102. AFPR, Lockheed, Marietta
103. AFPR, North American, Canoga Park
104. AFPR, North American, Downey
105-106. Air Force Special Weapons Center
107. Air Materiel Command
108. Air Research and Development Command (RDTAEF)
109. Air Research and Development Command (RDZPSP)
110. Air Technical Intelligence Center
111-113. ANP Project Office, Convair, Fort Worth
114. Albuquerque Operations Office
115. Argonne National Laboratory
116. Armed Forces Special Weapons Project, Sandia
117. Armed Forces Special Weapons Project, Washington
118. Army Ballistic Missile Agency
119. Assistant Secretary of the Air Force, R&D
120-125. Atomic Energy Commission, Washington
126. Atomics International
127. Battelle Memorial Institute
128-129. Bettis Plant (WAPD)
130. Bureau of Aeronautics
131. Bureau of Aeronautics General Representative
132. BAR, Aerojet-General, Azusa
133. BAR, Convair, San Diego
134. BAR, Grumman Aircraft, Bethpage
135. BAR, Martin, Baltimore
136. Bureau of Yards and Docks
137-138. Chicago Operations Office
139. Chicago Patent Group
140. Curtiss-Wright Corporation
141. Engineer Research and Development Laboratories
142-145. General Electric Company (ANPD)
146. General Nuclear Engineering Corporation
147. Hanford Area Office
148. Knolls Atomic Power Laboratory
149. Lockland Area Office
150. Los Alamos Scientific Laboratory
151. Marquardt Aircraft Company
152. Martin Company
153. National Advisory Committee for Aeronautics, Cleveland
154. National Advisory Committee for Aeronautics, Washington
155. National Bureau of Standards
156. Naval Air Development Center
157. Naval Air Material Center

[redacted]

[redacted]

158. Naval Air Turbine Test Station
159. Naval Research Laboratory
160. New York Operations Office
161. Nuclear Metals, Inc.
162. Office of Naval Research
163. Office of the Chief of Naval Operations (OP-361)
164. Patent Branch, Washington
165. Phillips Petroleum Company
166-169. Pratt and Whitney Aircraft Division
170. Redstone Arsenal
171. San Francisco Operations Office
172. Sandia Corporation
173. School of Aviation Medicine
174. Sylvania-Corning Nuclear Corporation
175. Technical Research Group
176. USAF Headquarters
177. USAF Project RAND
178. U.S. Naval Radiological Defense Laboratory
179-180. University of California Radiation Laboratory, Livermore
181-198. Wright Air Development Center
199-223. Technical Information Service Extension, Oak Ridge

[redacted]