MARTIN MARIETTA ENERGY SYSTEMS LIBRARIES
3 4456 0361255 2

CENTRAL RESEARCH LIBRARY
DOCUMENT COLLECTION

[redacted]

ORNL-2515 cy. 4
Chemistry-Separation Processes
for Plutonium and Uranium

AEC RESEARCH AND DEVELOPMENT REPORT

Classification Cancelled
Or Changed To
By Authority Of DOE 7/13/71
By E. Goldberg Date 11/12/71

RECOVERY OF NEPTUNIUM-237 FROM FLUORINATOR ASH IN THE ORNL METAL RECOVERY PLANT

R. E. Brooksbank
C. D. Hylton

CENTRAL RESEARCH LIBRARY
DOCUMENT COLLECTION
LIBRARY LOAN COPY
DO NOT TRANSFER TO ANOTHER PERSON
If you wish someone else to see this document, send in name with document and the library will arrange a loan.

[redacted]

CLASSIFICATION CANCELLED
Chm Pac ORNL Co 9/23/14
ADD Signature Date
Single review of CCRP-declassified documents was authorized by DOE Office of Declassification memo of August 22, 1994.

IDGE NATIONAL LABORATORY
operated by
NION CARBIDE CORPORATION
for the
ATOMIC ENERGY COMMISSION

[redacted]

[redacted]

Printed in USA. Charge 0.30 cents. Available from the U. S. Atomic Energy Commission, Technical Information Extension, P. O. Box 1001, Oak Ridge, Tennessee. Please direct to the same address inquires covering the procurement of other classified AEC reports.

LEGAL NOTICE

This report was prepared as an account of Government sponsored work. Neither the United States, nor the Commission, nor any person acting on behalf of the Commission:

A. Makes any warranty or representation, express or implied, with respect to the accuracy, completeness, or usefulness of the information contained in this report, or that the use of any information, apparatus, method, or process disclosed in this report may not infringe privately owned rights; or

B. Assumes any liabilities with respect to the use of, or for damages resulting from the use of any information, apparatus, method, or process disclosed in this report.

As used in the above, "person acting on behalf of the Commission" includes any employee or contractor of the Commission to the extent that such employee or contractor prepares, handles or distributes, or provides access to, any information pursuant to his employment or contract with the Commission.

[redacted]

ORNL-2515

Copy No. 4

Contract No. W-7405-eng-26

CHEMICAL TECHNOLOGY DIVISION

RECOVERY OF NEPTUNIUM-237 FROM FLUORINATOR ASH IN THE ORNL METAL RECOVERY PLANT

R. E. Brooksbank and C. D. Hylton

Date Issued: AUG 11 1958

OAK RIDGE NATIONAL LABORATORY
Oak Ridge, Tennessee
operated by
UNION CARBIDE CORPORATION
for the
U. S. ATOMIC ENERGY COMMISSION

[redacted]

MARTIN MARIETTA ENERGY SYSTEMS LIBRARIES

3 4456 0361255 2

[redacted]

[redacted]

ABSTRACT

From 11.2 tons of K-25 and Paducah fluorinator ash, 127 g of Np-237 (98.7%) and 6.7 tons of uranium (99.6%) were recovered. Neptunium was separated from uranium by a factor of 9.3×10^3 during equilibrium conditions of the solvent-extraction process. The process consisted of dissolution of the ash in boiling 1.8 M $Al(NO_3)_3$--1.0 M HNO_3, one cycle of solvent extraction and partitioning, and continuous concentration of each product stream by evaporation. The aluminum nitrate complexed the fluoride in the ash and served as an extraction salting agent. The Al/F mole ratio was 1.6 in the K-25 material and 1.1 in the Paducah. With the lower Al/F ratio, 27% less aluminum nitrate was required. Less than 0.1% of the fluoride in the feed (K-25, 0.04%; Paducah, 0.09%) was extracted and/or entrained with the neptunium.

Uranium losses to the neptunium product stream during process start-up and shutdown caused a lower over-all Np/U separation, 5.5×10^3 for the K-25 program and 825 for the Paducah. After the Paducah product was withdrawn from the system, it was adjusted as feed and recycled through the solvent extraction equipment to further decontaminate and concentrate the neptunium. Through the two cycles of solvent extraction, the neptunium was separated from uranium by a factor of 3.6×10^5; 6.67 kg of Th-232 in the Paducah ash followed the neptunium quantitatively through both cycles.

The neptunium product was transferred to the Chemistry Division for a final laboratory purification; the uranium product was decontaminated sufficiently by the one extraction cycle and was transferred to Y-12 for conversion to UO_3.

[redacted]

[redacted]

CONTENTS

		Page
1.0	Introduction	3
2.0	Description of Process	3
2.1	Ash Dissolution and Feed Preparation	3
2.2	Solvent Extraction	5
2.3	Product Concentration	6
3.0	Process Data	7
3.1	Solvent Extraction Losses	7
3.2	Material Balance	7
3.3	Product Purity	8
4.0	References	9

[redacted]

[redacted]

1.0 INTRODUCTION

The nonvolatile fluoride ash resulting from the fluorination of UO_3 to UF_6 at K-25 and Paducah was processed for recovery of neptunium and uranium. This ash collects at the bottom of the fluorination tower, in the cyclone separator, and in the filter. For shipment to ORNL, the ash was defumed, pulverized, and packaged in 35-gal drums. The neptunium content averaged 11 g/ton of ash, and a typical chemical composition of the ash was:

Component	Wt %	Component	Wt %
U	60.00	Ni	0.55
F	23.00	Cr	0.30
H_2O	10.60	Cu	0.25
Fe	2.95	Zr	0.15
Na	1.30	Mn	0.10
Ca	0.80	Mg	Trace

2.0 DESCRIPTION OF PROCESS

The chief steps in the process[1] to recover neptunium and uranium from fluorinator ash consisted of dissolution of the ash in a boiling 1.8 M aluminum nitrate--1.0 M nitric acid mixture, one cycle of solvent extraction, and product concentration by evaporation (Fig. 1).

2.1 Ash Dissolution and Feed Preparation

Experimental ash dissolutions had indicated that a boiling aluminum nitrate--nitric acid mixture was the most satisfactory dissolvent.[1] One kg of ash was dissolved in 13 liters of a 1.8 M $Al(NO_3)_3$--1.0 M HNO_3 mixture, and digested at the boiling point under full reflux for 2 - 4 hr. The digestion coagulated and dehydrated silica so that emulsion formation and column operational difficulties would be minimized.

In the K-25 dissolvings 91 kg of ash was dissolved in 57 liters of 13.4 M HNO_3 and 880 liters of 2.0 M $Al(NO_3)_3$, and boiled at full reflux for 14 hr. The resulting solution contained approximately 50 g uranium per liter, 1.8 M $Al(NO_3)_3$, and 1.0 M HNO_3. To increase plant capacity and conserve aluminum nitrate, the volume of the dissolvings and the ash/dissolvent ratio were increased in the Paducah program to 159 kg of ash, 95 liters of 13.4 M HNO_3, and 1130 liters of 2.0 M $Al(NO_3)_3$. The mixture was boiled at full reflux for 8 hr, and the resulting feed so-

[redacted]

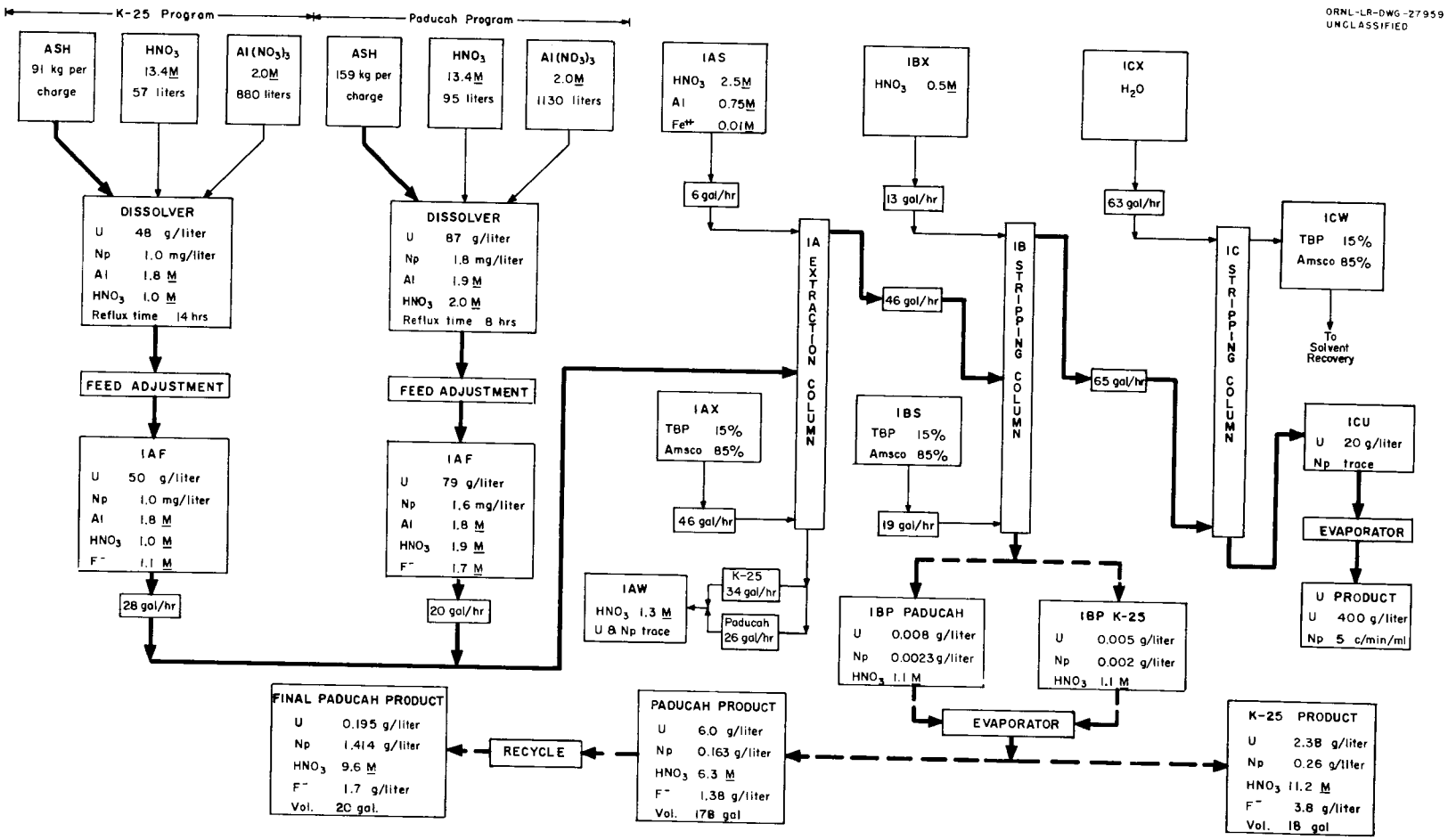

Fig. 1. Chemical Flowsheet for Np^{237} Recovery from K-25 and Paducah Fluorinator Ash.

lution (79 g of uranium per liter, 1.8 M $Al(NO_3)_3$, 1.9 M HNO_3) was satisfactory in the extraction cycle, yet 27% less aluminum nitrate was consumed per unit of ash dissolved than in the K-25 dissolvings.

Aluminum nitrate in the feed complexed fluoride which would otherwise form nonextractable complexes with neptunium and uranium and would corrode the stainless steel. There was an aluminum/fluoride mole ratio of 1.6 in the K-25 feed, but this ratio was reduced to 1.1 in the Paducah feed without loss of product. The mole ratio was increased to 1.2 in the extraction column, however, by the aluminum nitrate in the scrub stream (1AS).

2.2 Solvent Extraction

The feed was processed in three pulsed columns (Table 2.1): the extraction column (1A), the neptunium partitioning column (1B), and the uranium stripping column (1C).

Table 2.1. Column Dimensions and Throughput

Column	Dia., in.	Pulse Amplitude, in.	Pulse Frequency, cycles/min	Column Heights, ft: Scrub	Extraction	Strip or Partitioning	Throughput, gal/hr-ft^2
A	6.625	1	58	16	19	--	Scrub, 244 K-25 extraction, 375 Paducah extraction, 338
B	6.625	1	58	13	--	16	Partitioning, 366 Scrub, 150
C	9.625	1	58	--	--	25	Strip, 256

Neptunium and uranium were co-extracted from the feed with 15% tributyl phosphate in Amsco and scrubbed with 2.5 M HNO_3--0.75 M $Al(NO_3)_3$. The scrub also contained 0.01 M Fe^{++} which maintained the neptunium in the IV extractable valence. Neptunium extraction is favorable up to a uranium saturation in the solvent of 60%,[1] and in this process a uranium saturation of 50% was selected as a safe range for maximum neptunium and uranium extraction.

Neptunium was separated from uranium in the partitioning column, 1B, with an aqueous phase 1.1 M in nitric acid. At this acid concentration the neptunium extraction coefficient is low, 0.05, while that of uranium is 1.5.[1] This condition was favorable for re-extracting stripped uranium with 15% TBP. Since the volume of the aqueous strip was approximately half that of the feed, the neptunium concentration was increased by a factor of 2; the neptunium was further concentrated by evaporation.

The separation of neptunium from uranium in the two programs was:

	Np-U Separation Factor	
	K-25	Paducah
Equilibrium solvent extraction conditions	9.3×10^3	9.3×10^3
Feed to product, 1 cycle	5.5×10^3	825
Initial product to final product, recycle	-	435
Initial feed to final product, 2 cycles	-	3.6×10^5

Uranium was stripped from the solvent with an equal volume of water in the 1C column, and the aqueous product stream (1CU) was continuously concentrated from 20 to 400 g/liter. The solvent effluent from the strip column (1CW) was recycled through the system after treatment with 0.1 M Na_2CO_3 and 0.05 M HNO_3 in separate columns.

In the Paducah program the initial neptunium product was solvent extracted a second time to further decontaminate and concentrate it. Approximately 178 gal of product was adjusted with aluminum nitrate, nitric acid, and uranium and processed according to the original flowsheet.

2.3 Product Concentration

The uranium product stream (1CU), containing 20 g of uranium per liter, was concentrated to 400 g/liter by evaporation. The concentrate was continuously withdrawn from the evaporator, cooled to room temperature, accumulated in a holdup tank, and then packaged in 55-gal stainless steel drums for shipment.

The neptunium product (1BP) was concentrated by boildown in a pot evaporator and withdrawn in batches. This operation concentrated all ionic impurities and apparently contributed impurities produced by the corrosive action of fluoride on the stainless steel evaporator. The K-25 neptunium product contained 41 g of iron per liter, and, on the assumption that this was due to fluoride corrosion, aluminum nitrate

solution was added to the evaporator in the first phase of the Paducah program to complex the fluoride. This reduced the iron content of the Paducah product by a factor of 40.

The volumes of neptunium products (1BP) of the K-25 and Paducah programs were reduced 120- and 77-fold, respectively.

3.0 PROCESS DATA

3.1 Solvent Extraction Losses

Uranium losses in each effluent stream (1AW, 1BP, 1CW) were less than 0.01% during the equilibrium portion of the extraction cycle. Composite uranium losses, however, were 0.21 and 0.49% for the K-25 and Paducah programs, respectively. Combining the two programs, the uranium composite loss was 0.45%. These losses include startup, shutdown, and all nonequilibrium losses.

Neptunium equilibrium and composite losses in the solvent extraction process were approximately 0.7 and approximately 1.3, respectively (Table 3.1).

Table 3.1. Neptunium Losses

	Losses, % of that in Feed				
	Equilibrium		Composite		K-25 + Paducah (Prorated)
Stream	K-25	Paducah	K-25	Paducah	
1AW	0.01	0.25	2.50	0.25	0.56
1CU	0.70	0.50	0.17	0.53	0.44
Samples	-	-	-	0.37	0.32
Total	0.71	0.75	2.67	1.15	1.32

3.2 Material Balance

Based on ORNL measurements, the over-all recoveries were 99.6% for uranium and 98.7% for neptunium. The amount of uranium in the shipments as measured by ORNL was 2.5% more than that measured by K-25 and 0.31% less than that measured by Paducah (Table 3.2).

Table 3.2. Uranium and Neptunium Material Balance

	Amount, g			
	K-25 Program		Paducah Program	
	Uranium	Neptunium	Uranium	Neptunium
ORNL feed measurements	870,971	18.35	5,016,654	110.58
Shippers' measurements	849,968	-	5,212,000	-
Between-site difference	21,003	-	195,346	-
Product shipped	867,925	17.47	5,169,015	109.51
Samples shipped or on hand	40	-	1,474	0.41
Np loss to U product	-	0.03	-	0.53
In waste disposals	1,853	0.45	25,152	0.28
Total accounted for	869,818	17.95	5,195,641	110.73
ORNL feed measurements	870,971	18.35	5,016,654	110.58
Gain or loss over process	1,153	0.40	178,987	0.15
Difference between shipper's and feed measurement wt	21,003	-	195,346	-
Net difference	19,850	-	16,359	-

3.3 Product Purity

One cycle of solvent-extraction was sufficient to produce specification-grade uranium. The neptunium product was transferred to the Chemistry Division for further purification on a laboratory scale.

The neptunium product from one cycle of solvent extraction contained more uranium than the equilibrium value indicated (6.15 g U/g Np) because of nonequilibrium extraction conditions during startup and shutdown. Processing the initial Paducah product through a second extraction cycle, however, reduced the uranium content to 0.138 g U/g Np.

The Paducah neptunium product stream (1BP) contained excessive alpha activity, and analysis of the solution for alpha emitters showed the presence of Io (Th-230), a natural decay product of uranium-238. The concentrated product contained 17 grams of ionium in 6.67 kg of thorium. From a conversation with Paducah personnel, it was concluded that the thorium, being nonvolatile, had accumulated in the ash from microquantities of thorium in virgin uranium supplied to Paducah. When the first-phase Paducah product was recycled through the plant, the thorium followed the neptunium stream quantitatively.

[redacted]

The chemical composition of the K-25, Paducah first phase, and Paducah final phase product is presented in Table 3.3.

Table 3.3. Composition of Neptunium Product

	Amount, g/liter		
		Paducah Product	
Constituent	K-25 Product	First Phase	Final Phase
Np	0.26	0.0997	1.414
U	2.38	6.0	0.195
Al	19.00	12.50[a]	0.050
F	3.80	1.38	1.70
Fe	41.00	0.355	0.420
Th	-	6.1	87.0
Cr	2.60	0.09	0.103
Ni	3.50	0.052	0.077
Ca	-	0.02	0.0012
Cu	-	0.003	0.0025
Mg	-	0.0047	0.0006
Mn	-	0.007	0.009

a. 0.10 M $Al(NO_3)_3$ added to evaporator prior to boildown.

4.0 REFERENCES

1. J. H. Flanary, J. H. Goode, R. G. Mansfield, R. P. Wischow, "Recovery of Np-237 by the Neptex Solvent-Extraction Process," ORNL-2235 (March 11, 1957).

2. G. W. Parker et al., in Chemistry Division Semiannual Progress Report, ORNL-2046, p. 65 (March 19, 1956).

3. G. W. Parker, P. M. Lantz, "Investigation of Paducah Ash and Metal Recovery Waste as a Large Scale Source of Np-237," ORNL-CF-57-8-34 (July 31, 1957).

[redacted]

[redacted]

ORNL-2515
Chemistry-Separation Processes
for Plutonium and Uranium
M-3679 (21st ed.)

INTERNAL DISTRIBUTION

1. C. E. Center
2. Biology Library
3. Health Physics Library
4-5. Central Research Library
6. Reactor Experimental Engineering Library
7-11. Laboratory Records Department
12. Laboratory Records, ORNL R.C.
13. A. M. Weinberg
14. L. B. Emlet (K-25)
15. J. P. Murray (Y-12)
16. J. A. Swartout
17. E. H. Taylor
18. E. D. Shipley
19. F. L. Culler
20. M. L. Nelson
21. W. H. Jordan
22. C. P. Keim
23. J. H. Frye, Jr.
24. S. C. Lind
25. A. H. Snell
26. A. Hollaender
27. K. Z. Morgan
28. M. T. Kelley
29. T. A. Lincoln
30. R. S. Livingston
31. A. S. Householder
32. C. S. Harrill
33. C. E. Winters
34. H. E. Seagren
35. W. K. Eister
36. F. R. Bruce
37. D. E. Ferguson
38. R. B. Lindauer
39. H. E. Goeller
40. C. W. Hancher
41. R. A. Charpie
42. J. A. Lane
43. M. J. Skinner
44. R. E. Blanco
45. G. E. Boyd
46. W. E. Unger
47. R. R. Dickison
48. A. T. Gresky
49. E. D. Arnold
50. C. E. Guthrie
51. J. W. Ullmann
52. K. B. Brown
53. K. O. Johnsson
54. J. C. Bresee
55. D. L. Katz (consultant)
56. G. T. Seaborg (consultant)
57. M. Benedict (consultant)
58. C. E. Larson (consultant)
59. L. Squires (consultant)
60. J. H. Rushton (consultant)
61. R. E. Brooksbank
62. P. A. Goudreau
63. C. D. Hylton
64. W. H. Lewis
65. J. L. Matherne
66. E. M. Shank
67. ORNL - Y-12 Technical Library, Document Reference Section

EXTERNAL DISTRIBUTION

68. Aeroprojects, Inc.
69. Air Technical Intelligence Center
70. Alco Products, Inc.
71-76. Argonne National Laboratory
77. Armed Forces Special Weapons Project, Sandia
78. Armed Forces Special Weapons Project, Washington
79-82. Atomic Energy Commission, Washington
83-84. Atomics International
85. Babcock and Wilcox Company (NYOO-1940)
86. Babcock and Wilcox Company (SOO-274)
87. Battelle Memorial Institute
88. Bettis Plant (WAPD)

[redacted]

[redacted]

89-90. Brookhaven National Laboratory
91. Bureau of Ships
92-93. Chicago Operations Office
94. Chicago Patent Group
95. Combustion Engineering, Inc.
96. Division of International Affairs (Pennington)
97. Division of International Affairs (Woodruff)
98. Dow Chemical Company (Rocky Flats)
99-102. duPont Company, Aiken
103. duPont Company, Wilmington
104. Fluor Corporation
105-116. General Electric Company, Richland
117. Goodyear Atomic Corporation
118. Hanford Operations Office
119. Iowa State College
120. Knolls Atomic Power Laboratory
121-122. Los Alamos Scientific Laboratory
123. Mallinckrodt Chemical Works
124. Mound Laboratory
125. National Advisory Committee for Aeronautics, Cleveland
126. National Lead Company of Ohio
127. Naval Research Laboratory
128. New York Operations Office
129. Nuclear Metals, Inc.
130. Patent Branch, Washington
131-134. Phillips Petroleum Company (NRTS)
135-137. Union Carbide Nuclear Company (ORGDP)
138. Union Carbide Nuclear Company (Paducah Plant)
139-140. University of California Radiation Laboratory, Berkeley
141-142. University of California Radiation Laboratory, Livermore
143. Vitro Engineering Division
144-183. Technical Information Service Extension (For Official AEC Use)
184. Division of Research and Development, AEC, ORO

[redacted]