MARTIN MARIETTA ENERGY SYSTEMS LIBRARIES
3 4456 0361267 8

CENTRAL RESEARCH LIBRARY
DOCUMENT COLLECTION

4

ORNL-2534
Instruments

A COMPUTER FOR A POSITION INDICATING SYSTEM

D. J. Knowles

OAK RIDGE NATIONAL LABORATORY
operated by
UNION CARBIDE CORPORATION
for the
U.S. ATOMIC ENERGY COMMISSION

CENTRAL RESEARCH LIBRARY
DOCUMENT COLLECTION
LIBRARY LOAN COPY
DO NOT TRANSFER TO ANOTHER PERSON
If you wish someone else to see this document, send in name with document and the library will arrange a loan.

Printed in USA. Price $2.25 cents. Available from the

Office of Technical Services
U. S. Department of Commerce
Washington 25, D. C.

LEGAL NOTICE

This report was prepared as an account of Government sponsored work. Neither the United States, nor the Commission, nor any person acting on behalf of the Commission:

A. Makes any warranty or representation, express or implied, with respect to the accuracy, completeness, or usefulness of the information contained in this report, or that the use of any information, apparatus, method, or process disclosed in this report may not infringe privately owned rights; or

B. Assumes any liabilities with respect to the use of, or for damages resulting from the use of any information, apparatus, method, or process disclosed in this report.

As used in the above, "person acting on behalf of the Commission" includes any employee or contractor of the Commission to the extent that such employee or contractor prepares, handles or distributes, or provides access to, any information pursuant to his employment or contract with the Commission.

ORNL-2534

Contract No. W-7405-eng-26

INSTRUMENTATION AND CONTROLS DIVISION

A COMPUTER FOR A POSITION INDICATING SYSTEM

D. J. Knowles

DATE ISSUED

JUL 18 1958

Submitted as a Thesis to the Graduate Council of The University of Tennessee in partial fulfillment of the requirements for the degree of Master of Science

OAK RIDGE NATIONAL LABORATORY
Oak Ridge, Tennessee
operated by
UNION CARBIDE CORPORATION
for the
U.S. ATOMIC ENERGY COMMISSION

MARTIN MARIETTA ENERGY SYSTEMS LIBRARIES

3 4456 0361267 8

ACKNOWLEDGEMENT

The author is indebted to Prof. J. D. Tillman and Dr. C. H. Weaver for constructive criticisms and guidance in the preparation of this thesis, and to Mrs. Georgia D. Card for great patience and diligence at the typewriter. The author also wishes to express his appreciation to Union Carbide Nuclear Company for the opportunity of carrying out this research.

TABLE OF CONTENTS

CHAPTER		PAGE
I.	INTRODUCTION	1
	Statement of the problem	1
	Scope of the thesis	2
	Status of the art	2
	Method of solution	3
	Organization of the study by chapters	3
II.	GENERAL CONSIDERATIONS	8
	Description of facility using computer	8
	Derivation of formulae	12
	Limit indicating method	15
III.	DETAILED DESIGN OF COMPUTER	18
	Design of electromechanical adders	18
	Design of remote servo inputs	27
	Experimental starting torques	29
	Design of servo multipliers	35
	Mechanical design	37
IV.	ERROR ANALYSIS OF COMPUTER	42
	Error in adder sections	42
	Error in input servo systems	46
	Error in the multiplier section	48
BIBLIOGRAPHY		55
APPENDIX		57

CHAPTER I

INTRODUCTION

Statement of the Problem

The object of this work was to design and build a computer which would compute the space coordinates of a given point on a massive spectrometer housing, using the linear measurements of another point on the apparatus and angular information as inputs and solving three linear equations involving trigonometric functions. This computer is part of a larger system for indicating the coordinates of the interesting point and the overall project controlled the derivation of the equations which the computer solves as well as the type of readout used. Design specifications for the computer were not set up initially except that the readout would follow closely the actual position of the point on the spectrometer so that the speed of response was that of the bridge crane which is the manipulator for the spectrometer. The computer therefore had to accept input information equivalent to linear motion at the rate of 10 feet per minute maximum and one fourth rpm maximum for angular change. The overall accuracy of the position indicating system had to be such that the point indicated would lie within a one half inch diameter sphere with its center at the coordinates shown by the indicating system. The accuracy of the computer was not, therefore, directly specified, except that maximum accuracy of computation was necessary to allow for the accumulation of errors in the system other than those of computation and still not

exceed the overall error allowance. All control apparatus for the manipulator was to fit on the operator's deck of the crane so that the computer had to fit into a space approximately one and one-half feet by one and one-half feet by two feet. Readout was to be on dials or counters and the displayed information was to include two angles as well as the three space coordinates of the point. Finally, if possible, outputs of the solutions of the position equations were to be made available for use in a limit indicating arrangement to protect the spectrometer against careless operation of the manipulator.

Scope of the Thesis

Aside from a section devoted to a description of the overall project which is necessary to define the terms of the equations which the computer is designed to solve, this thesis will describe only the design and testing of the computer portion of the system.

Status of the Art

Machine computation has become a very important part of the Electrical Engineering Field. The widespread use of computational techniques has resulted in the commercial availability of mechanical and electrical components for this use as well as complete computers for many uses. The specialized nature of this project meant that although certain convenient components were available, an original design was necessary and this design is presented as a contribution to the computer art.

Method of Solution

The problem briefly restated, was to build a computer to solve three equations in the same time interval. Work on the overall position indicating system but outside the scope of this thesis led to the decision to use an analog type of computation with a digital readout. This phase of the work also fixed the equations to be solved as well as the need for a computer to solve them. With the equations as a starting point a block diagram (Figure 1) of the necessary operations was made, which provided for the desired intermediate and final results. This diagram was then implemented by more detailed flow sheets using several different systems of computation involving electrical and mechanical methods and apparatus. The system shown in Figure 2 and summarized in Figure 3 was the one finally used. The design then proceeded to a still more detailed diagram specifying individual components such as gear ratios, motors, potentiometers, hardware, etc. A scale drawing of the computer was next made using manufacturers specifications in order to determine its approximate size and to provide a record of the method of assembly. Those inertias and friction loads necessary for the design of the servo voltage-to-shaft rotation converter were calculated and an estimate of the computer accuracy was made for comparison with the desired accuracy. Finally the computer was assembled and tested to prove its design.

Organization of the Study by Chapters

Chapter II is devoted to a view of the overall project of the

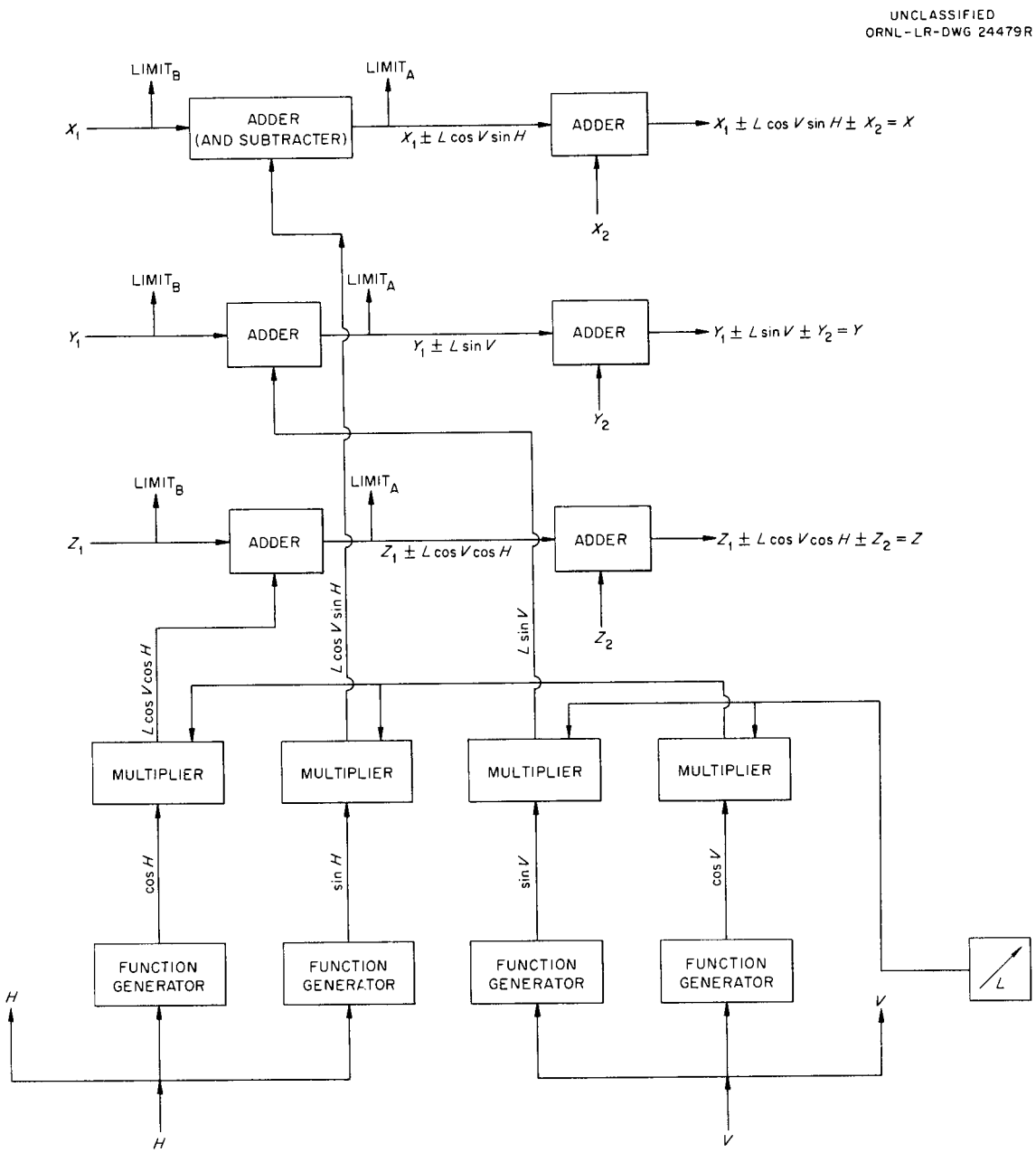

Figure 1. Block Diagram of Computing Scheme.

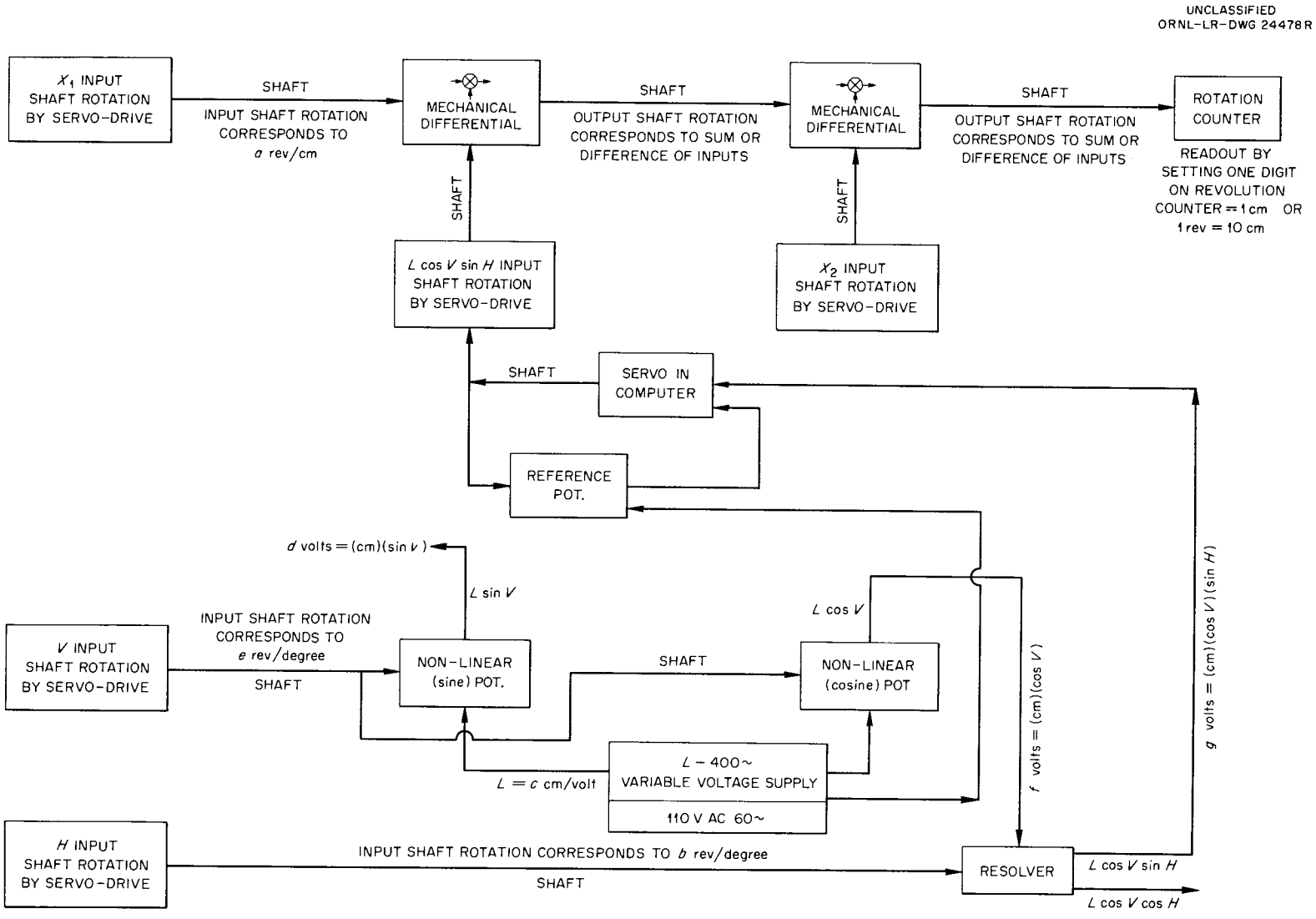

Figure 2. Flow Sheet and Components in Computer.

UNCLASSIFIED
ORNL-LR-DWG 21205

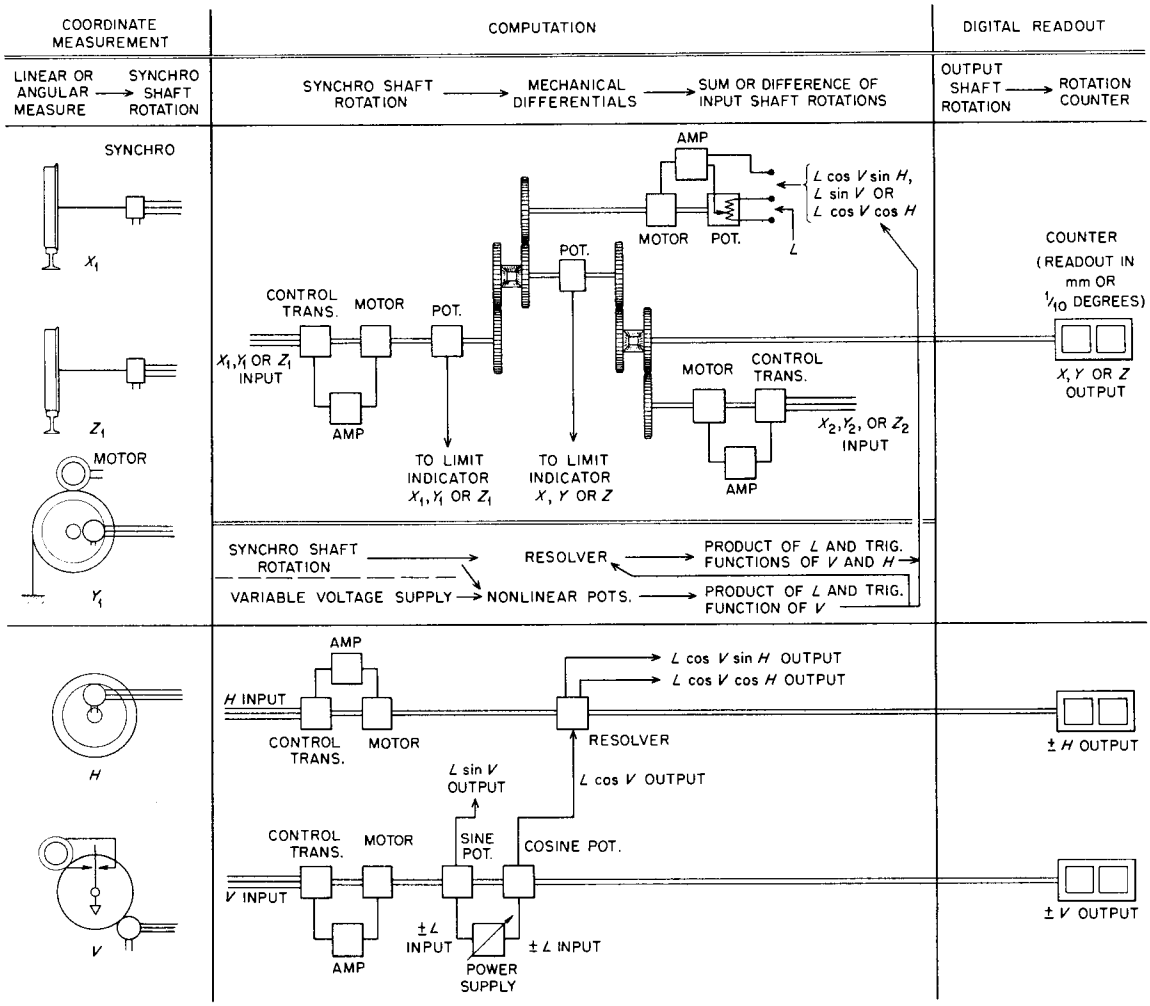

Figure 3. Summary of Computing System.

manipulator and position indication of the spectrometer in order to explain the position equations and to define the terms. This part also explains the specification of speed of response of the computer and accuracy of computation in terms of the overall job. The limit indicating scheme is also briefly discussed to explain the extra outputs.

In Chapter III the steps and details of design are presented and discussed together with the total plan of the computer. The block diagram showing the method of computation is further developed by a more detailed diagram implementing the flow sheet with actual components. The final design complete with all details is the result of the next step in the design. System operation is described.

Chapter IV is a discussion of the computational errors and comparisons of estimated errors to measured errors obtained by testing the computer.

Some design material and sample computations are gathered in the Appendix.

A Bibliography is appended.

CHAPTER II

GENERAL CONSIDERATIONS

Description of the Facility where the Position Indicator and Computer are used

The Bulk Shielding Facility at ORNL consists of a pool of water approximately forty feet in its long dimension (North-South), twenty feet across (East-West) and twenty feet deep. Normal water level is two and one-half feet above the floor level of the building housing the Facility and is retained by walls three feet high. The reactor which is the source of radiation (gamma rays and neutrons) for testing is located ten feet from the South wall on the North-South center line about nineteen feet below water level. (Refer to Figure 4). The reactor is supported by a bridge which rests on rails which are in turn on the top of the North-South pool walls. The reactor normally stays at this fixed location but may be positioned along the North-South center line at will. In form the reactor is a cube of hollow fuel elements roughly three feet in each dimension. The center of the cube was the point chosen for the origin of a right hand set of rectangular coordinates which enable the specification of any point in the pool, and the position indicator was to read out an X, Y and Z coordinate of a particular point on the gamma ray spectrometer. (Refer to Figures 4 and 5.) The gamma ray spectrometer is the data taking device used to read radiation data at points in the pool due to the presence of the reactor and consists of a cylindrical shield

surrounding the radiation detector with an essentially weightless collimator tube on one end. The assembly of detector and shield weighs approximately 15 tons and accurate manipulation of this mass is accomplished by the use of a modified bridge crane. Figures 4 and 5 show the modification of the crane. The vertical motion is stabilized by a rigid member with a yoke at the bottom end. The yoke can be rotated about the vertical axis and straddles the shield which is attached to the yoke by trunnions opposite its center of gravity. The shield can also be tilted from the horizontal plane. The particular point to be indicated by the position indicator was point A of Figure 5 which is the end of the collimator and the point at which data is taken. While the distance from the center of gravity of the shield to Point A normally remains fixed at about five feet, it was anticipated that it might be changed at some time to as much as six feet or as little as four feet by changing the design of the collimator tube.

A remote linear measurement system previously built at ORNL utilizing a small wheel rolling on a flat surface attains an accuracy of one-sixteen inches or about 1.5 mm in thirty feet. This range of measurement is compatible with the present case, and by using a wheel with a circumference of fifty cm and an accurate servo transmission system the coordinates of the center of gravity of the shield could be measured with an adequate accuracy. The measurement would not be absolute in that the building and crane dimensions are assumed to be perfect and without temperature or structural deflections and also the shield was assumed to be a perfect pendulum in that its center of gravity is always

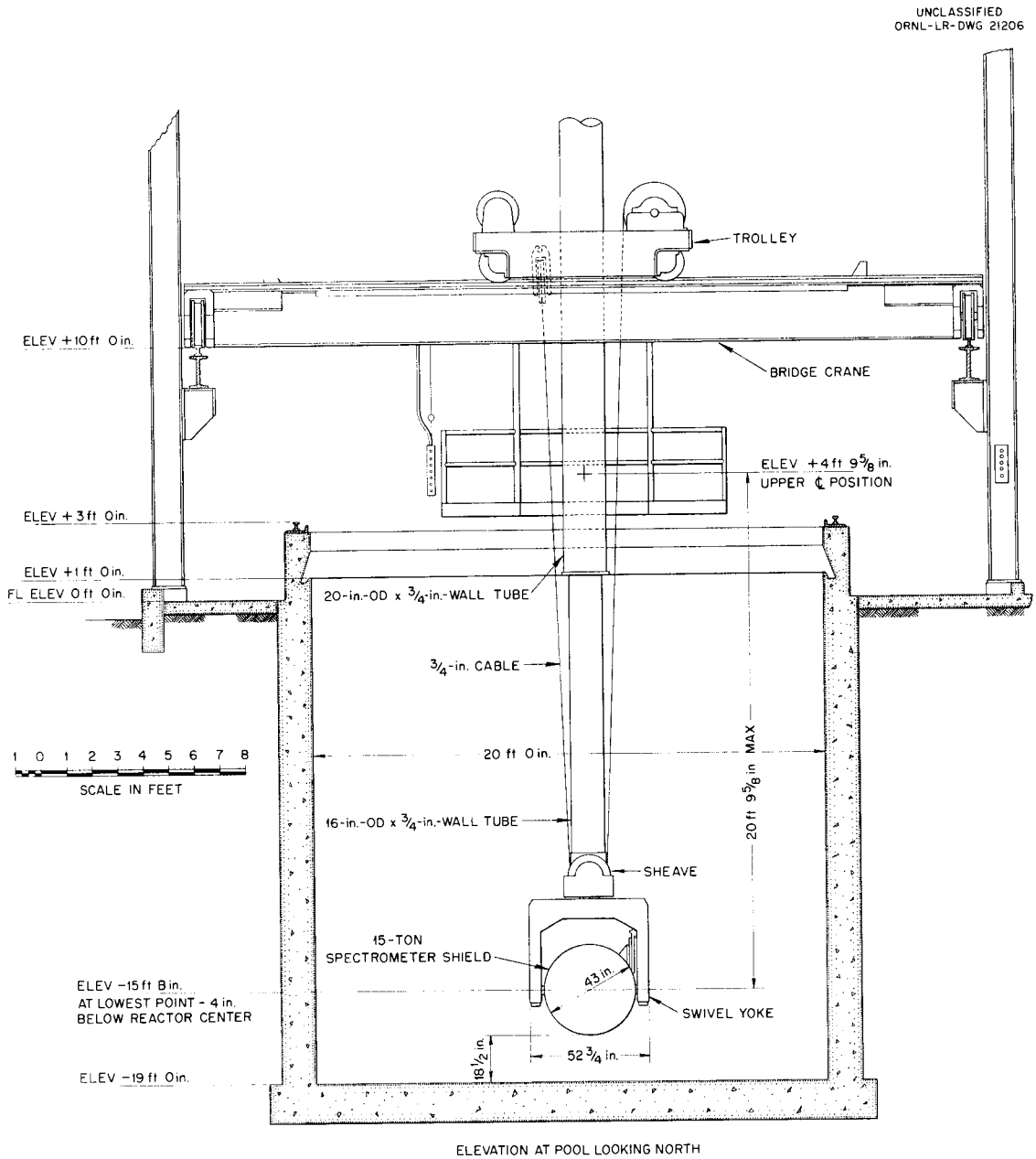

Figure 4. Spectrometer Positioning Device.

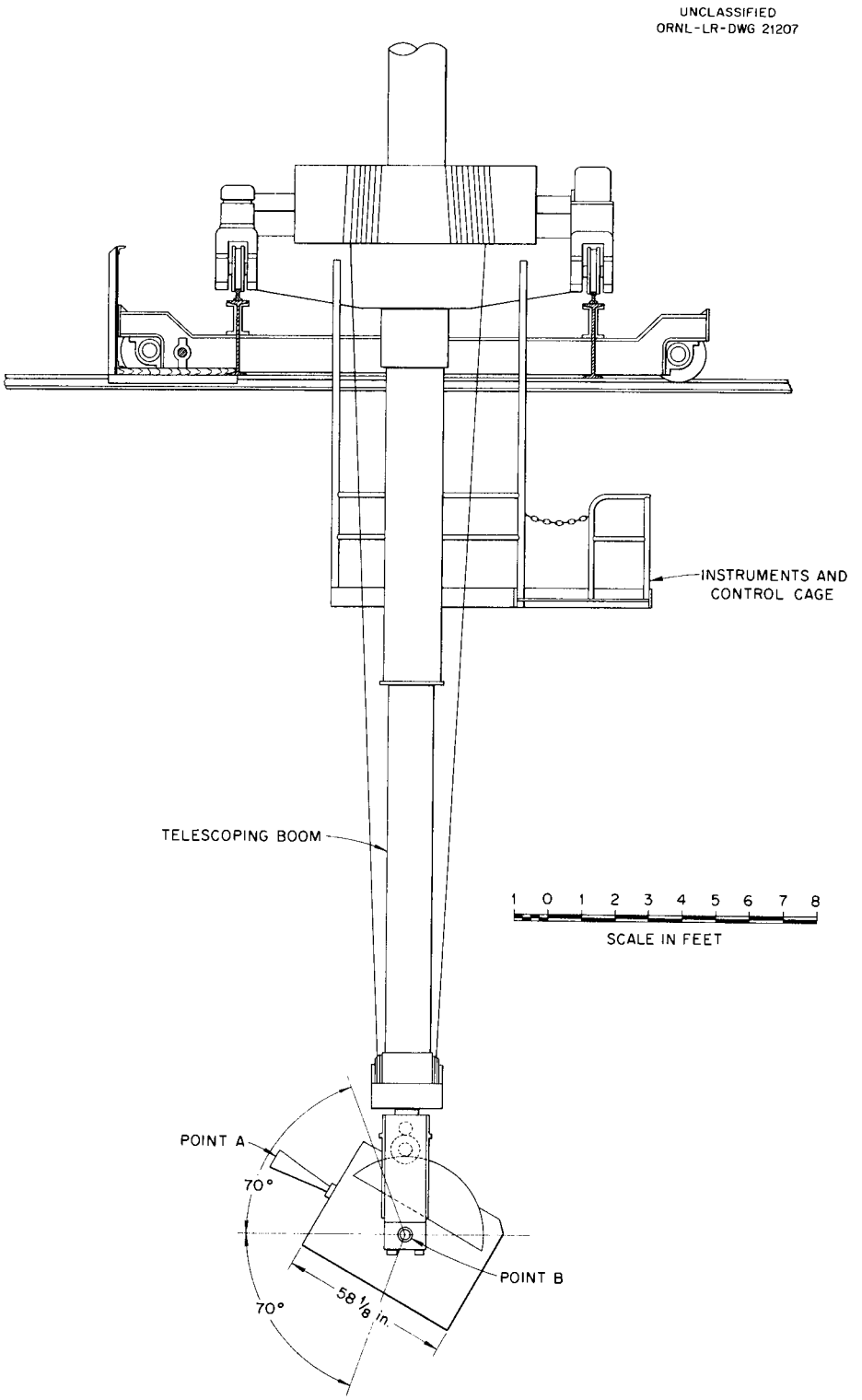

Figure 5. Spectrometer Positioner, Side View.

directly below a given point on the trolley of the crane. Since the accumulation of many small errors could add up to the allowable plus or minus 6.35 mm provision was made in the computer for an additional set of inputs for each coordinate so that corrections for the worst errors as determined by actual measurement might be made after the project was installed.

Since the coordinates of Point A were the ones which were desired for display, trigonometric corrections for the position of the Point A referred to the center of gravity of the shield were necessary. There follows a derivation of the equations which must be solved. (Refer to Figure 6.)

Z_1 - Using a centerline of the pool as reference, the distance from the center of the reactor to the center of gravity of the shield (oz_2 on Figure 6).

X_1 - Distance from pool center line to CG of shield (ox_2 on Figure 6).

Y_1 - Distance from a plane through the center of the reactor parallel to the surface of the water, to the CG of the shield (oy_2 on Figure 6).

Z_2 = L cos V cos H - correction to Z_1 for offset of collimator (z_2z_1).

X_2 = L cos V sin H - correction to X_1 for offset of collimator (x_2x_1).

Y_2 = L sin V - correction for Y_1 for offset of collimator (y_2y_1).

Z_3 = Possible minor correction to Z due to structural changes.

X_3 - Possible minor correction to X due to structural changes.

Y_3 - Possible minor correction to Y due to structural changes.

L - Distance from CG of shield to data taking point (end of collimator). (AB on Figure 6) This must be adjustable.

V - Angle of tilt - angle between surface of water and long axis of shield. Maximum variation was to be $\pm$ 70°.

H - Angle of rotation - angle between center line of pool and horizontal projection of long axis of shield. At H = 0°, long axis was to be parallel to center line of pool. It would them vary from -90° to + 180° at least. Full 360° was not mandatory. Readout was to be in 1/10°.

X_1 is measured along the trolley rail.

Z_1 is measured along the crane rail.

Y_1 is measured with respect to a point on the trolley.

V and H were the same type of input as the coordinates but were to drive direct readouts as well as sine and cosine function generators to provide L cos V and L sin V, and a resolver to provide L cos V sin H and L cos V cos H.

These products were used as additional inputs to the X, Y and Z sections. The reference for the H angle was the bridge of the crane in that the angle is measured by a geared up servo at the top of the rigid Y member. The angle V was referred to a plumb bob on the surface of the shield.

Equations which were to be solved:

$$X = X_1 \pm X_2 \pm X_3 = X_1 \pm L \cos V \sin H \pm X_2.$$

UNCLASSIFIED
ORNL-LR-DWG 24476

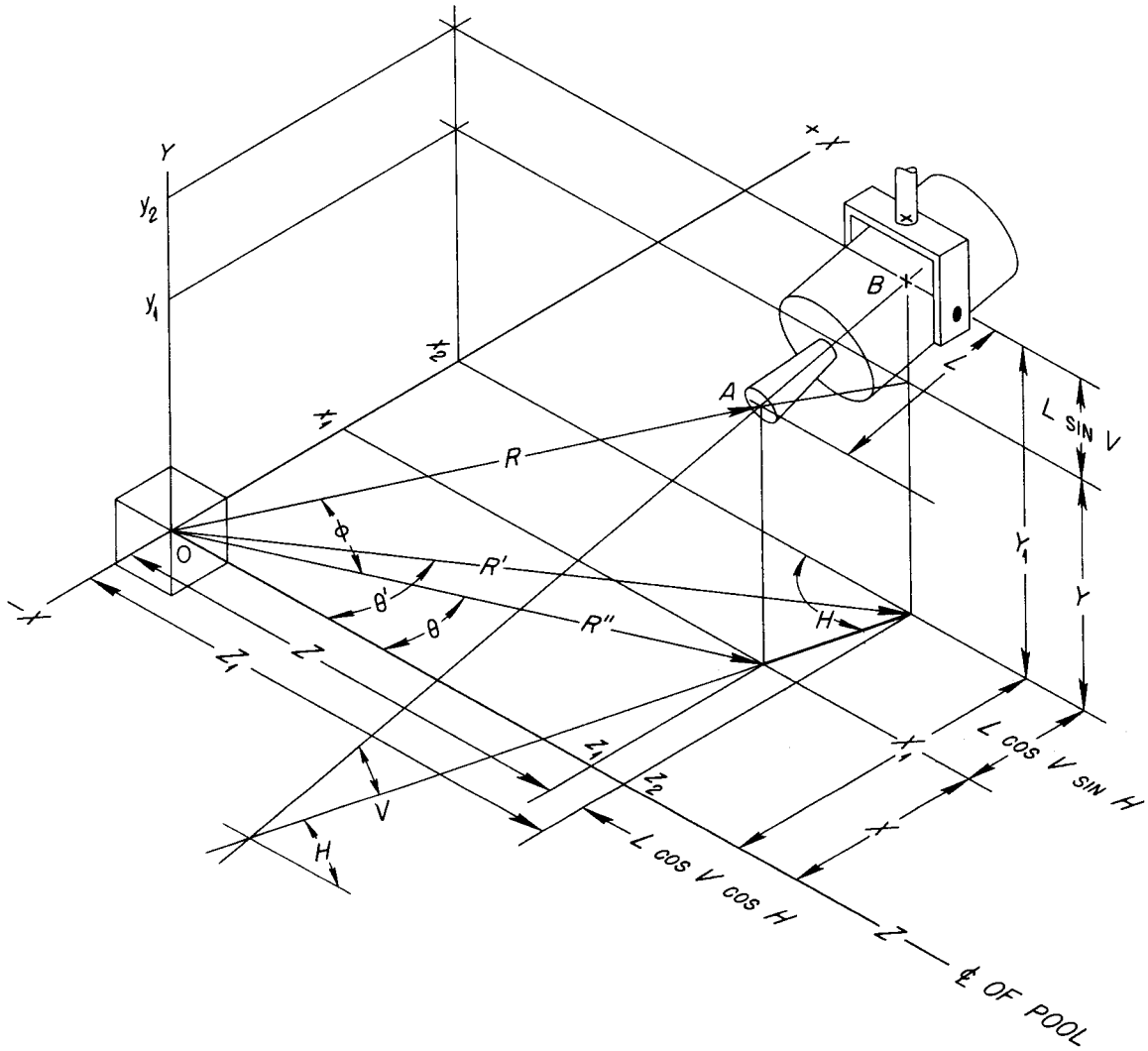

Figure 6. Explanation of Symbols.

$$Y = Y_1 \pm Y_2 \pm Y_3 = Y_1 \pm L \sin V \pm Y_2.$$

$$Z = Z_1 \pm Z_2 \pm Z_3 = Z_1 \pm L \cos V \cos H \pm Z_2.$$

From this is seen that the computer was to have three independent sections, each one solving one equation.

The readout had to have the desired accuracy when the spectrometer was under water and was to be mainly useful when the spectrometer was in a volume approximately thirty feet long by twenty feet wide by twenty feet deep, but the system could not lose its calibration when it was raised out of the water and moved across the North pool wall an additional ten feet to a cradle on the floor of the building for maintenance and calibration. These dimensions fixed the number of digits in the metric readout and Table I indicates these in terms of the exact operating dimensions of the manipulator.

Limit Indicating Method

It was also desired to limit the operation of the spectrometer in space so that an alarm would operate if any portion of the spectrometer came within a few inches of an obstruction. Obstructions were mainly the walls of the pool but might change if material was placed in the pool for testing. Mechanical stops which would protect the spectrometer completely would also limit the operation too much to be practical. In order to simulate a contact arrangement which would alarm if any point on the shield or collimator comes close to a wall, use was made of the fact that coordinates of the CG of the shield (X_1, Y_1, Z_1) and of the end of

the collimator, (X, Y, Z) are continuously available in the computer. When Point B reaches the location shown on Figure 7a, it should be limited in the X and Z directions but if the shield is rotated, the end of the collimator may still be damaged. Therefore, if either point A or B exceeds its limits or if both do, there should be an alarm. A second illustration 7b shows the condition at the end of the pool where the limits in Z must be a and b. Due to close clearances, the spectrometer must be horizontal and at its upper Y limit before it is safe to cross the wall. When the wall has been crossed, the Z limits become c and d.

Outputs were therefore provided in the computer to operate the limit alarms.

UNCLASSIFIED
ORNL-LR-DWG 24477R

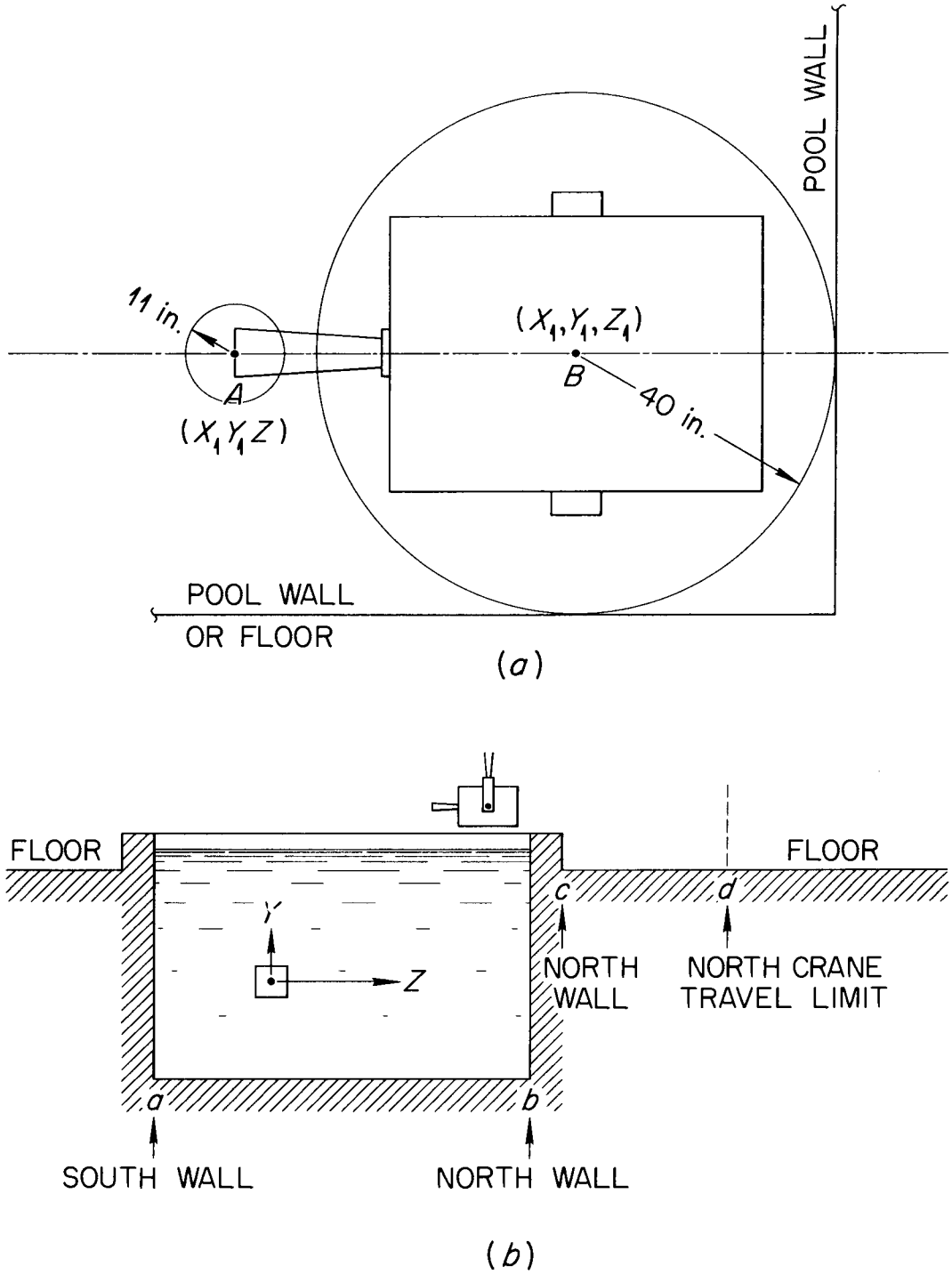

Figure 7. Limit Indicating System.

CHAPTER III

DETAILED DESIGN OF THE COMPUTER

Design Methods and Details of Electro-Mechanical Adders

Starting from the schematic diagram of the computer (Figure 3), the electro-mechanical parts were detailed first. Error of computation was the primary design criterion but the engineering principles discussed below were also used to arrive at an acceptable piece of equipment. Since the process of design would probably require several alterations to the first attempt as well as a large amount of duplication between coordinates, a design procedure and design aids were developed which provided an easily altered record. The aids consisted of three master Design Sheets which were duplicated by Thermofax or Ozalid from a pencil master and a curve of Moment of Inertia vs. Gear Diameter (Figure 8). Steps in the design procedure were as follows:

1. Selection of readout. For ease of readout and the least ambiguity, a digital readout was used. The number of digits used was fixed by the dimensions of the space utilized during operation of the spectrometer (Table I) and the accuracy of measurement required ($\pm$ 1/4" or $\pm$ 6.35 mm). The readout device was a register reading centimeters directly with the units wheel subdivided into 2 millimeter divisions so that the nearest millimeter could be read using a hairline index. The register thus converted the analogue representation of linear measurement (shaft rotation) to digital. Since the cm wheel turned one revolution

TABLE I

RANGES OF OPERATION

Dial	Range of Operation (Point A)		Smallest Unit Needed	No Digits Required
	English	Metric		
X	± 9' 8-1/2"	± 2.96 meters	1/2 cm	4 of each sign
Y	-5'6" to + 25' 7-3/4"	-1.68 to + 7.84	"	4 of each sign
Z	45'6"	13.9 meters	"	5 of one sign
V	± 70°		1/2°	3 of each sign
H	-90° + 180°		1/2°	4 positive 3 negative
	(Point B)			
	± 7' 9-5/8"	± 2.38 meters	1/2 cm	
	-4" to 20' 5-5/8"	-0.1 m to 6.25 m	1/2 cm	
	40'	12.2 m	1/2 cm	

for 10 cm, all other shaft rotations had to be referred to this constant (first column of Design Sheet 1).

2. Preliminary Layout of Gear Trains. Starting with the register shaft, a rough schematic layout of the two differentials and the necessary input gearing was made, showing the desired inputs. Gear ratios were calculated so that no piece of equipment would exceed its rated speed in operation and each shaft had a certain cm/rev constant. Other considerations led to the choice of an input of 50 cm/rev for the linear inputs and the synchros had to track with these inputs. Where a ten turn potentiometer was used, the gear ratio could not allow more than ten turns of the shaft for maximum travel. Design Sheet 1 (Figure 9) was used to keep a running record of shaft rotations and speeds.

3. Implementing Gear Ratios with Usable Gears. Several conflicting factors had to be considered in translating the first schematic layout to a practical gear train.

a. Input Servo Loop. The number of gears coupling the synchro transformers to the servo motors was kept to the minimum since each mesh adds backlash which not only adds to the computational error but may cause oscillation or hunting of the input servos.

b. Inertia of Gear Trains. Minimum power servo motors were desirable due to space requirements as well as the limit of 400 cycle power available, and power input requirements were dependent on the inertia to be accelerated. Chestnut and Mayer[1] show that the inertia of a single

---

[1] Harold Chestnut and Robert W. Mayer, Servomechanisms and Regulating System Design (New York: John Wiley and Sons, Inc., 1955) Vol II, pp. 114-118.

gear mesh can be reduced toward a minimum by using several meshes of smaller diameter gears to attain the same ratio. The placing of the largest diameter gear farthest from the input shaft also reduces the inertia. In this case the low expected speeds and accelerations put other considerations before inertia loads in order of importance.

c. Economics of Purchased Gears. With approximately 100 gears to be used, the cost of individual gears and the mounting hardware became important. The maximum ratios obtainable from manufacturers stocks in one mesh is about four to one. Special gears cost about three times the nearest stock gear. However, the extra bearings, supports, shafts, clamps, and other hardware usually make the use of a special gear less expensive unless a prime number of teeth is required or the size of the gear is very large. Class Two precision gears cost roughly twice Class One precision gears.

d. Space Requirements. Each deck of the computer was restricted in the lateral dimension by the base mounting plate dimensions and in the vertical direction by the available cabinet space. The latter set a maximum of 3-3/4" which limited the diameter of the largest usable gear and the former made minimum dimension trains desirable.

e. Center-to-Center Distance. While a given mesh of two gears might have the correct ratio, the center-to-center distance sometimes caused an interference with component hangers. The same ratio might be obtained using larger gears or an idler gear inserted to gain space.

f. Differential End Gears. The output shaft of a differential rotates half as fast as one of its end gears if the other end is clamped

(no input). This inherent two-to-one ratio had to be considered in calculating gear ratios.

4. Final Full Scale Design. If space considerations are important as they were in this case a full scale layout is necessary to determine interferences and possible improvements. The use of full scale templates is very useful and templates were used in this design. At this point additional idler gears may be found necessary. In all cases, however, the use of the Design Sheets is indicated since they are easily altered or discarded. The Design Sheets for the coordinates other than X are placed in the Appendix for completeness together with a discussion of inertia units, moment of inertia calculations and the efficiency of gear trains. The moment of inertia for each gear was filled in on the Design Sheets 3, using Figure 8, for convenience of calculation of the total inertia load. Figure 10 shows the estimated inertia and frictional loads found by the methods of the Appendix. Table III tabulates the frictional and inertia loads used.

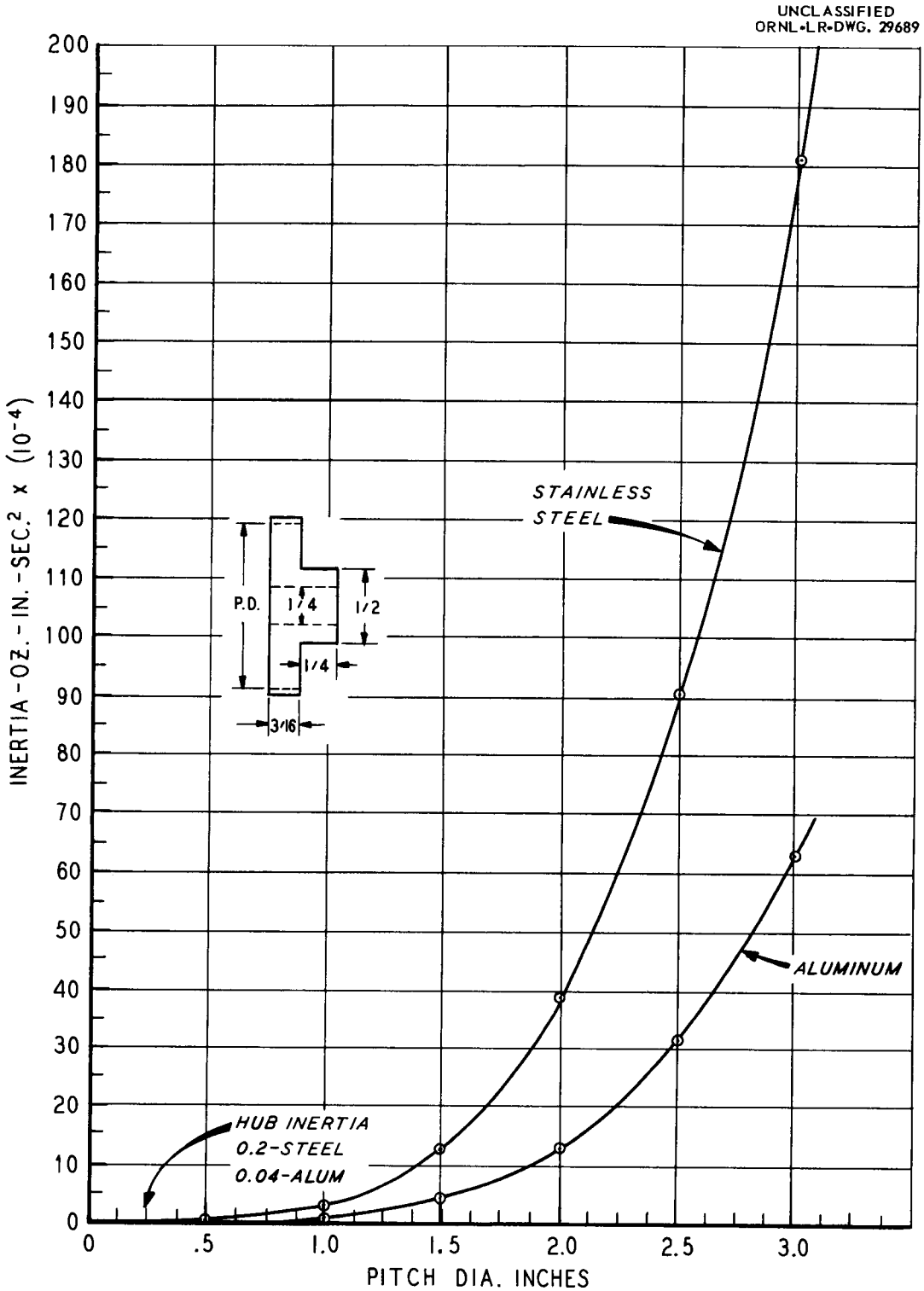

Figure 8. Curve of Inertia vs Gear Diameter.

UNCLASSIFIED
ORNL-LR-DWG. 29690

COORDINATE X

ROTATION CHART

SHAFT	cm/rev.	MAX. RPM	MAX. NO. OF REV.	REMARKS
A	10.0	30.5	59.2	
B	10.0	30.5	59.2	
C	3.6	0.35	0.35	BASED ON 1.27 CM CHANGE PER MIN.
D	1.0	1.27	1.27	" " " " " " "
E	5.0	61.0	118.4	
F	5.0	33.6	67.2	
G	5.0	61.0	95.2	
H	50.0	6.1	9.52	
J	50.0	6.1	9.52	
K	35.0	4.8	9.6	
L_A	60.0	5.1	9.85	
L_B	50.0	6.1	9.52	

10'/ min = 305 cm / min = 6.1 rpm of 50 cm wheel

$\frac{1}{4}$ rpm and L = 168 cm = 90°/ 60 sec = 168 cm/90°

Figure 9. X Rotation Chart (Design Sheet 1).

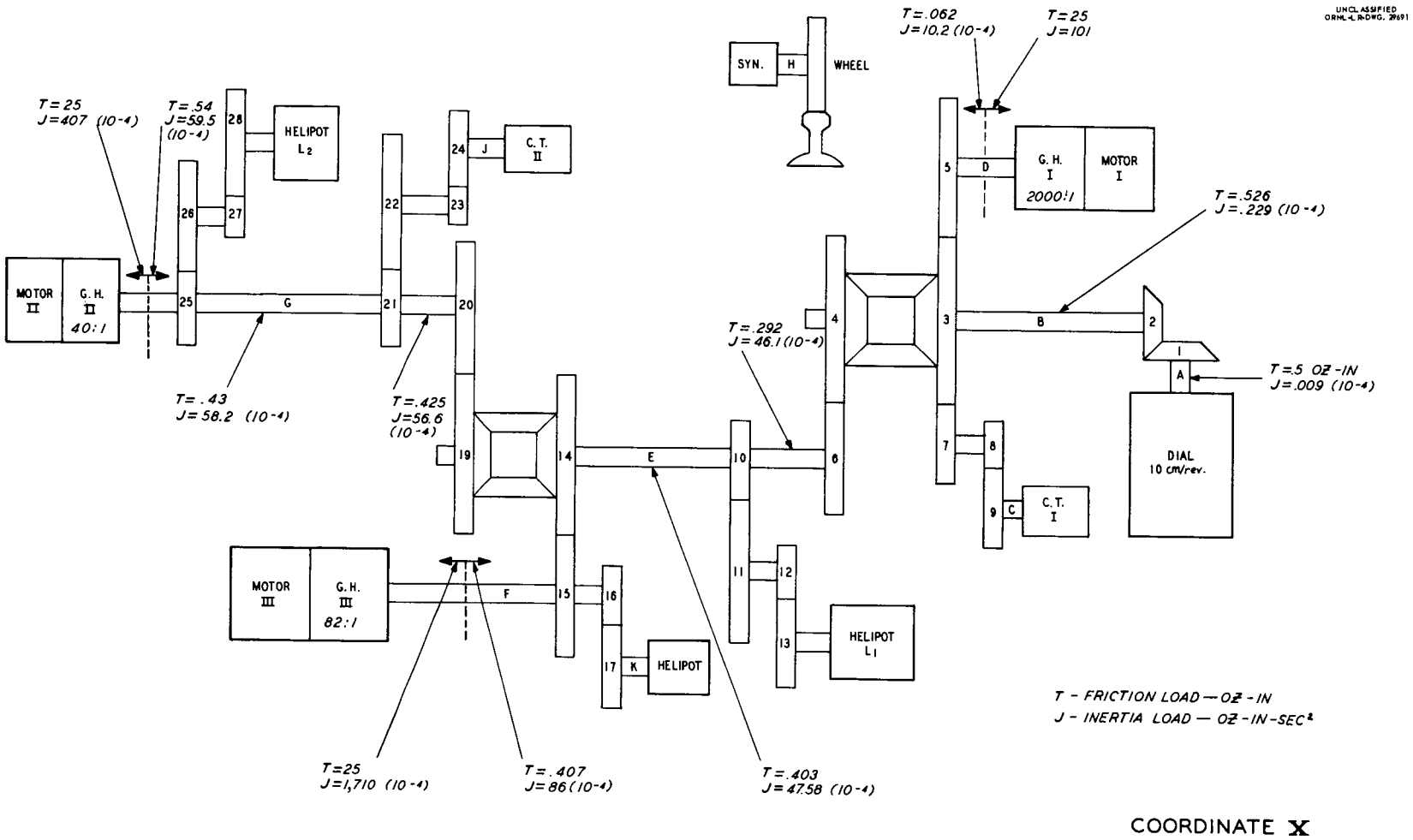

Figure 10. X Gear Layout (Design Sheet 2).

UNCLASSIFIED
ORNL-LR-DWG. 29692

GEAR NO.	TEETH	PITCH	PITCH DIA.	BORE	MAT'L.	INERTIA
			IN.	IN.		X (10^{-4}) OZ-IN-SEC
1	36	72	.500	.125	ALUM.	0.06
2	36	72	.500	.125	ST. ST.	0.16
3	120	72	1.666	.688	" "	DIFF. END GEAR
4	120	72	1.666	.688	" "	" " "
5	24	72	.333	.125	" "	0.13
6	120	72	1.666	.250	" "	18.0
7	120	72	1.666	.250	" "	18.0
8	40	64	.625	.250	" "	0.8
9	55	64	.859	.120	" "	1.6
10	30	64	.469	.250	" "	0.3
11	90	64	1.406	.250	" "	9.5
12	30	64	.469	.250	" "	0.3
13	120	64	1.875	.125	" "	28.5
14	65	72	.903	.688	" "	DIFF. END GEAR
15	130	72	1.806	.250	" "	24.5
16	30	64	.469	.250	" "	0.3
17	210	64	3.281	.250	" "	258.0
18	NOT	USED	——	——	——	——
19	65	72	.903	.688	" "	DIFF. END GEAR
20	130	72	1.806	.250	" "	24.5
21	32	64	.500	.250	" "	0.4
22	80	64	1.250	.250	" "	6.0
23	30	64	.469	.250	" "	0.3
24	120	64	1.875	.120	" "	28.5
25	30	64	.469	.250	" "	0.3
26	75	64	1.172	.250	" "	28.5
27	30	64	.469	.250	" "	0.3
28	120	64	1.875	.125	" "	28.5
29						
30						
EXTRAS						

COORDINATE X

Figure 11. X Gear Specification List (Design Sheet 3).

Design Methods and Details of Remote Servo Inputs

The complete computer might be considered to have inputs which are shafts G, F and D of Figure 10. However, the computer was designed for remote inputs so that the input shafts should be the shafts of the X, Y, Z, V, and H synchros. The possibility of additional error is discussed in the next chapter, but a complete design specification should include the specification of the drive motors.

The first step in the design is to determine the friction and inertia loads seen at shafts G, F and D. The tabulation of Figure 10 shows this. The method of calculation is shown in the Appendix as mentioned. To these loads must be added the loads due to the motor rotors and the gear heads. Gear heads were used to match the maximum power speed of the motors (roughly one half of the no load speed) to the maximum speed of the shafts being driven. The motors finally chosen had the characteristics shown in Table II. Actually a calculation was made using only the friction load of the gear train to get a rough approximation of the power required and then this was rechecked when the motor was chosen since the rotor was the main mass being driven. To approximate the power necessary to drive the system under acceleration, it was assumed that the crane would go from zero to maximum speed in one second. The following formulae were used to calculate the power output necessary under these conditions and Tables III and IV tabulate the information discussed in this section. In all cases power is more than adequate by factors of from 10 to 5000. (See Table IV).

TABLE II

SERVO TRANSMISSION SYSTEM SPECIFICATIONS

Input Element -	Kearfott Synchro Transmitter Model 512-2A
Input Voltage -	115 volts - 400 cycles
Input Power -	1.0 watts
Voltage Gradient -	1.57 volts/degree
Maximum Error -	7 minutes
Friction -	4 gm-cm
Data Receiver -	Kearfott Synchro Control Transmitter Model 502-2A
Input Voltage -	90 volts - 400 cycles
Input Power -	0.18 watts
Sensitivity -	1.000 volts/degree
Maximum Error -	7 minutes
Friction -	4 gm-cm
Motor -	Servo Mechanisms, Type 17 I.D. Winding 60J1-16
Input Power -	9.3 watts
Input Voltage -	115 volts, rms-400 cycles
Minimum Stall Torque -	0.42 oz-in.
No load speed	
Min. damping -	6000 rpm
Max. damping -	3700 rpm
Max. Power Output	
Min. damping -	0.58 watts at 3300 rpm
Max. damping -	0.32 watts at 2000 rpm
Rotor Inertia -	1.8 gm-cm^2
Stall torque with gearhead -	Up to 25 oz-in.
Maximum backlash with gearhead -	30 minutes
Efficiency -	90%
Additional inertia due to gearhead -	0.015 gm-cm^2
Servo Amplifier -	Servomechanisms, Inc. Model SA 118 H
Input impedance -	Over 1 megohm
Gain -	With an input of 0.01 V a.c. (rms) at 400 cps gain is 7300 $\pm$ 25 per cent
Saturation -	0.025 volts
Output -	100 volts

This amplifier is designed to be used with Servomechanisms, Inc., Type 171 D motor.

$P = P_1 + P_2$ where P = Power input to system.

P_1 = Power necessary to drive the frictional load to the maximum speed.

P_2 = Power necessary to accelerate the inertia load.

$P_1 = \frac{1}{1,352} NT$ N = Maximum expected speed in rpm.

T = Torque in in-oz.

$P_2 = \frac{1}{1,352} JNA$ J = Inertia at motor output shaft in oz-in-sec^2.

A = Maximum expected acceleration in radians per second.

The friction loads calculated were running friction and the necessary starting friction load was not known. The use of gear head motors provided 25 in-oz. of stall torque and this was some 50 times the expected running torque. No further design was felt necessary.

An experimental determination of starting and running torque was made after assembly of one deck by wrapping a cord around a known diameter shaft or pulley and starting the selected gear train by pulling the cord with precision spring balance. Average of several determinations on each shaft are shown in Table V. Considering that running torque is dependent on cleanliness and backlash of individual gears, the measured running torques are in good agreement with the calculated torques. Starting torques are seen to be two to three times the running torques, but are again a function of alignment, backlash, cleanliness, etc. and could be larger if good assembly techniques are not used.

The final design feature of the servo system was based on the assumption that the output shaft should stay within one degree of the input at the maximum speed of 61 rev/min of shaft G. If the minimum rated gain of the servo amplifier was 5475 and one volt of error signal was available at one degree, the rated output of the amplifier was 100 volts (saturation). From the speed-torque curves of the motor (Figure 12) it can be seen that 0.095 oz-in are available if a 40 ratio is used in the gearhead, and $\frac{0.54}{40}$ or 0.013 oz-in are needed. A torque margin of 7.3 is available for overcoming starting friction and voltage drop in the cables.

TABLE III

INERTIA AND FRICTION OF COMPONENTS

Component	Inertia	Friction	Remarks
	oz-in-sec^2	oz-in	
Dial	100 (10^{-8})	0.5	J - estimated F- Starting Torque
Differential	10 (10^{-4})	0.015	J- estimated with typical end gears F- estimated
AJ Helipot	4.2 (10^{-6})	1	Maker's ratings
AN Helipot	3.1 (10^{-4})	1.3	Maker's ratings
Synchro	0.3 (10^{-4})	0.04	Kearfott ratings Size 11 synchro
Motor	0.255 (10^{-4})		Rated

TABLE IV

MOTOR POWER REQUIREMENTS

Motor	P_1	P_2	$P_1 + P_2$	Motor P	$\frac{P}{P_1 + P_2}$
	Watts	Watts	Watts	Average rated watts	
I	0.058 (10^{-3})	0.02 (10^{-3})	0.078 (10^{-3})	0.396	5000
II	0.0244	0.0135	0.0379	0.396	10.5
III	0.0101	0.0157	0.0258	0.396	15.4

TABLE V

STARTING AND RUNNING TORQUES

Shaft	Measured Starting Torque in-oz	Calculated Running Torque in-oz	Measured Running Torque in-oz
D	0.19	0.062	0.06
F	0.84	0.407	0.43
G	1.04	0.54	0.61

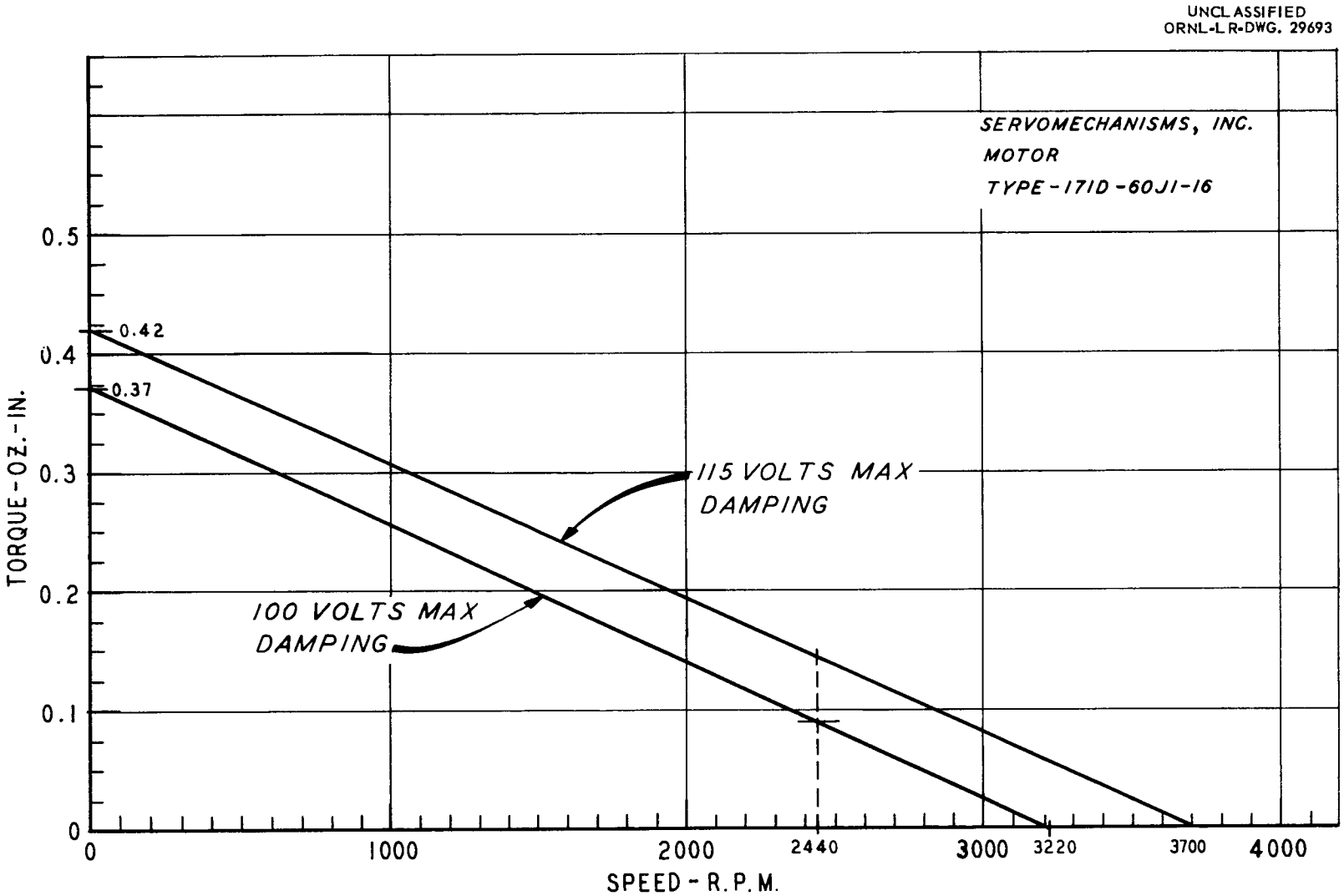

Figure 12. Speed Torque Curves for Motor.

Design Methods and Details of Servo Multipliers

As explained in the next chapter, extreme accuracy was necessary in the multiplier section. The multiplier is essentially a servo multiplier. Reference to Figure 3 shows that one input to the adder is for a term consisting of a constant multiplied by trigonometric functions. Length L was first converted to a proportional voltage, and this voltage across non-linear potentiometers yielded the first multiplication. The use of a resolver to perform the second multiplication gave two products from one piece of equipment. The proportional voltage analogue of the products was nulled against the voltage from linear potentiometers geared to the input shafts of the adder to convert the voltage to a shaft rotation required by the adders. A more detailed explanation can be made by reference to Figure 13.

If 168 cm is the maximum length expected from Point A to Point B, the 400 cycle supply voltage of 115 volts must represent twice this value or 336 cm since, as can be seen from the equations, both positive and negative corrections are necessary. Two linear potentiometers #1 and #2 allow adjustment of the voltage to an analogue of a length equal to L (fixed by the collimator in use). L was to be 130 cm most of the time and the voltage across the sine and cosine potentiometers was thus equal to 2 L or $\pm$ 44.5 volts. As the potentiometer was turned by the V drive mechanism the voltage seen between the slider of the potentiometer and the ground was L sin V volts and was of the correct polarity due to the construction of the potentiometer. When this voltage was applied to the

input of a servo amplifier, power was available to drive the servo motor connected to its output. The shaft of the motor is geared to the adder section and to the shaft of a linear potentiometer (pot. Y in Figure 13) connected across the original voltage where 115 volts equals 336 cm. As the motor runs, the voltage across potentiometer Y nulls the voltage from the sine potentiometer converting the electrical product to a shaft rotation. An example illustrates the method.

Shaft K turns 35 cm/rev or represents 350 cm for 10 turns. With 115 volts across it, there are 3.04 cm/volt. If a 2 foot collimator is being used, the distance from A to B is 130 cm. At 3.04 cm/volt, the voltage which is set by potentiometers #1 and #2 across the sine potentiometer is 85.5 volts, or $\pm$ 42.75 volts. If the angle V is set to $+30^{\circ}$, L sin V = (42.75)(0.5) = + 21.375 volts. The Y servo will now run until there is -21.375 volts between its slider and ground to null the voltage from the sine potentiometer. The Y shaft will have turned $\left(\frac{21.375}{115}\right)(10)$ = 1.86 turns from center and the adder shaft rotation is (1.86) (35) = 65 cms. At V = 30° the addition to the Y coordinate is L sin 30° = (130 cm)(0.5000) = 65 cms which checks the voltage analogue.

The X and Z coordinates work in the same manner except that an additional multiplication is necessary. A resolver was used for this operation, two multiplications being done at once. The booster amplifier ahead of the resolver is a feedback amplifier with approximately 70 db of feedback and a gain of about 1.03. It had several functions. Not only did it reduce inaccuracy due to loading the input, but it compensated for the fact that the transformation ratio of the resolver was less

than 100% and further was arranged to compensate for temperature changes of the amplitude and phase of the resolver output. Resistors labeled a, b, c, d, e and f were trimmers for calibrating the linear potentiometers.

Mechanical Design

Figures 14, 15 and 16 are photographs of the completed mechanical details. Each breadboard deck is the computer for one coordinate. The dial nearest the reader is the coordinate distance in cm and the differentials used for adding as well as the small ten turn potentiometers used for the limit alarming circuits can easily be seen. On the far side of Figure 14, the X deck, the H angle input driving the resolver and the H angle readout are seen. On Figure 15, the Y deck, can be seen the V angle input, readout and the non-linear sine and cosine potentiometers. Figure 16, the Z deck, shows the two L potentiometers on the far side. Other photographs are included in the Appendix for completeness.

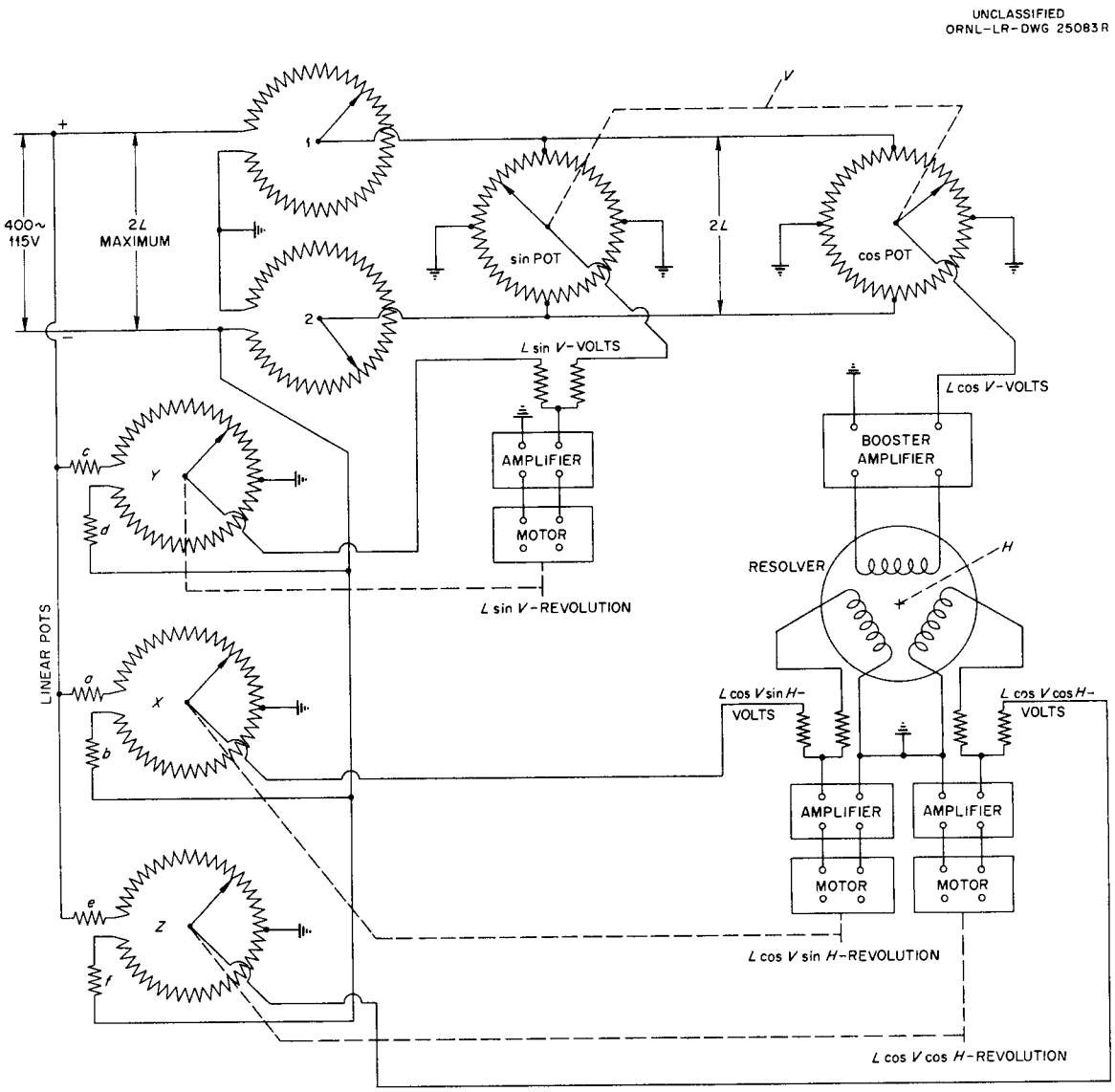

Figure 13. Servo Multiplier Circuit.

UNCLASSIFIED
PHOTO 42580

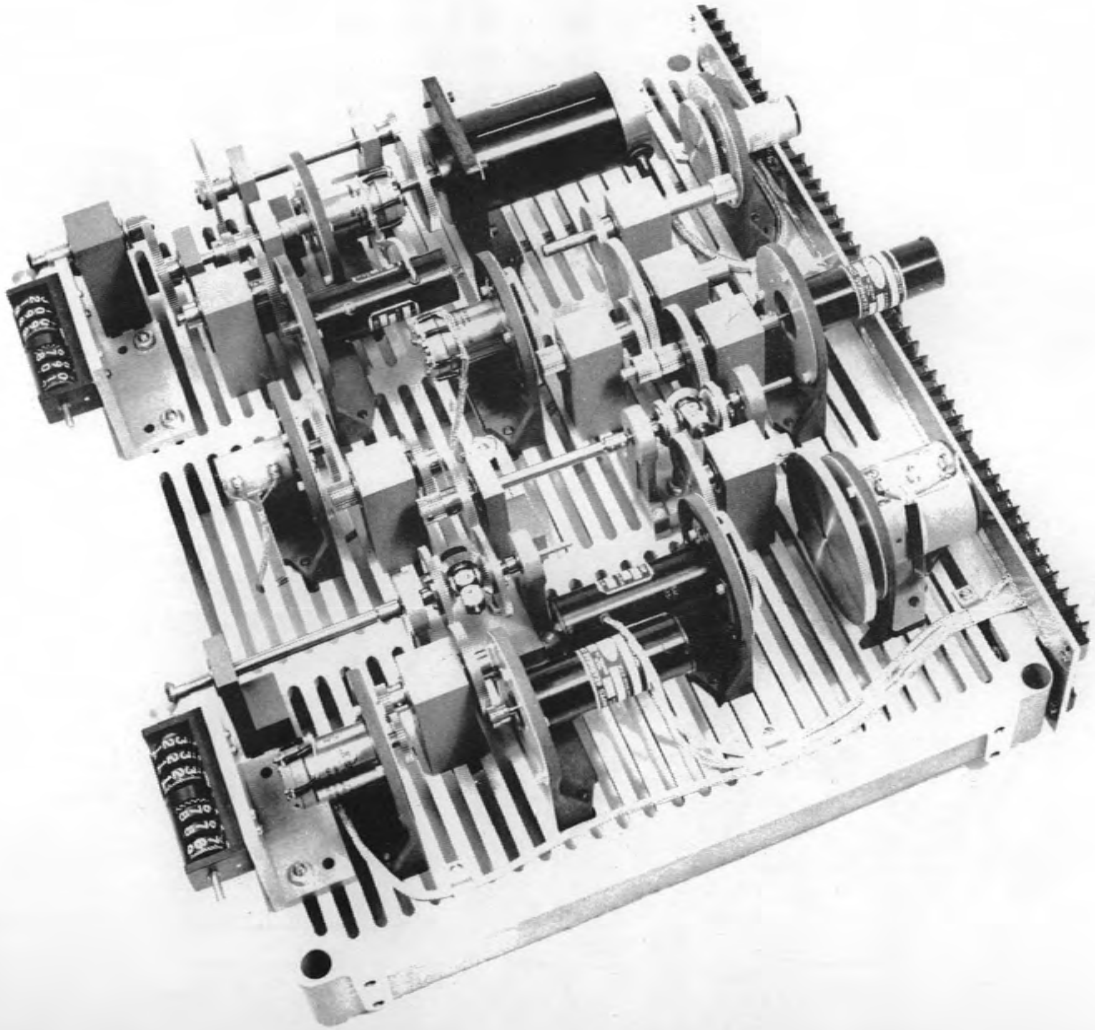

Figure 14. X Coordinate Computer Deck.

UNCLASSIFIED
PHOTO 42583

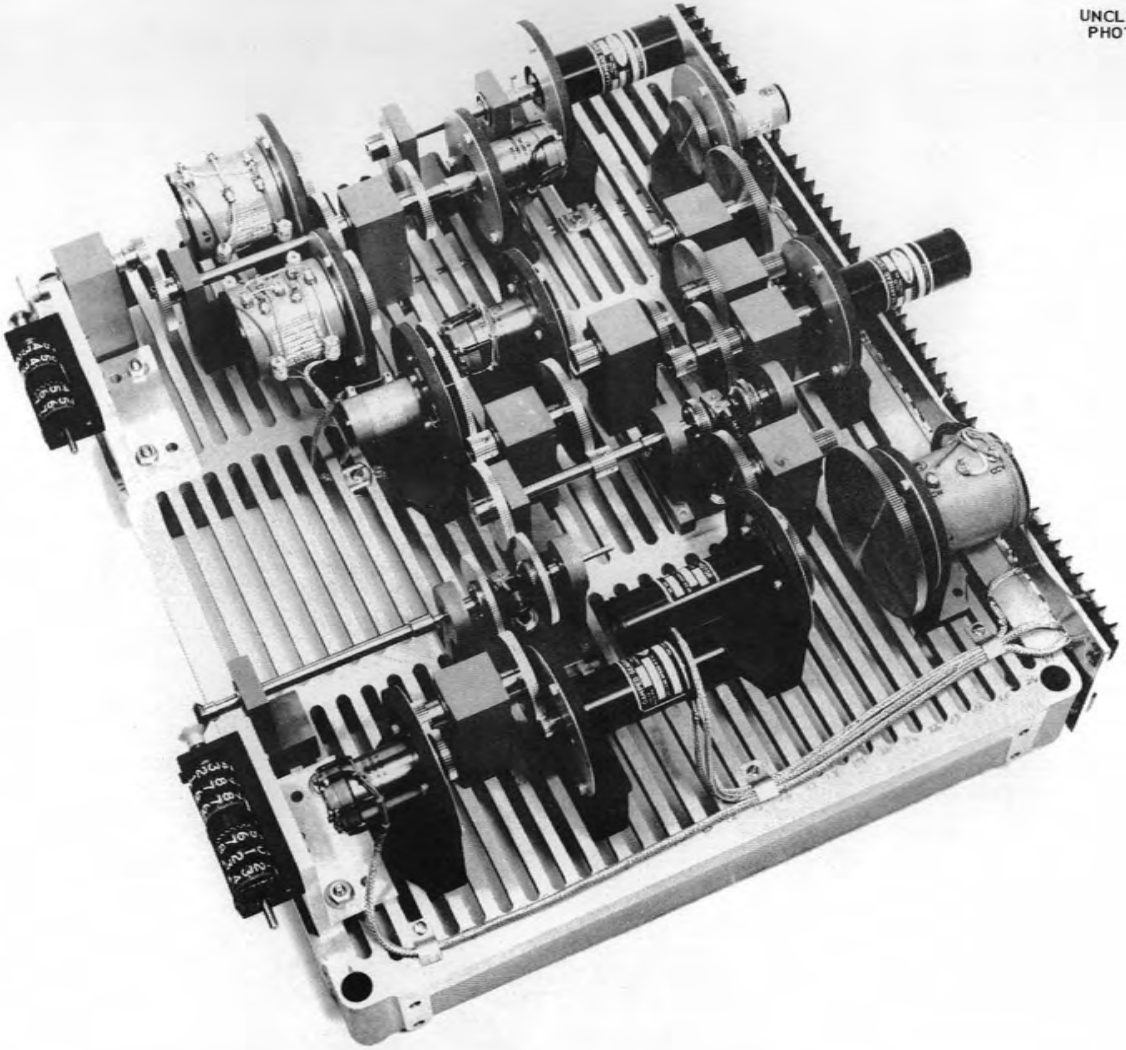

Figure 15. Y Coordinate Computer Deck.

UNCLASSIFIED
PHOTO 42581

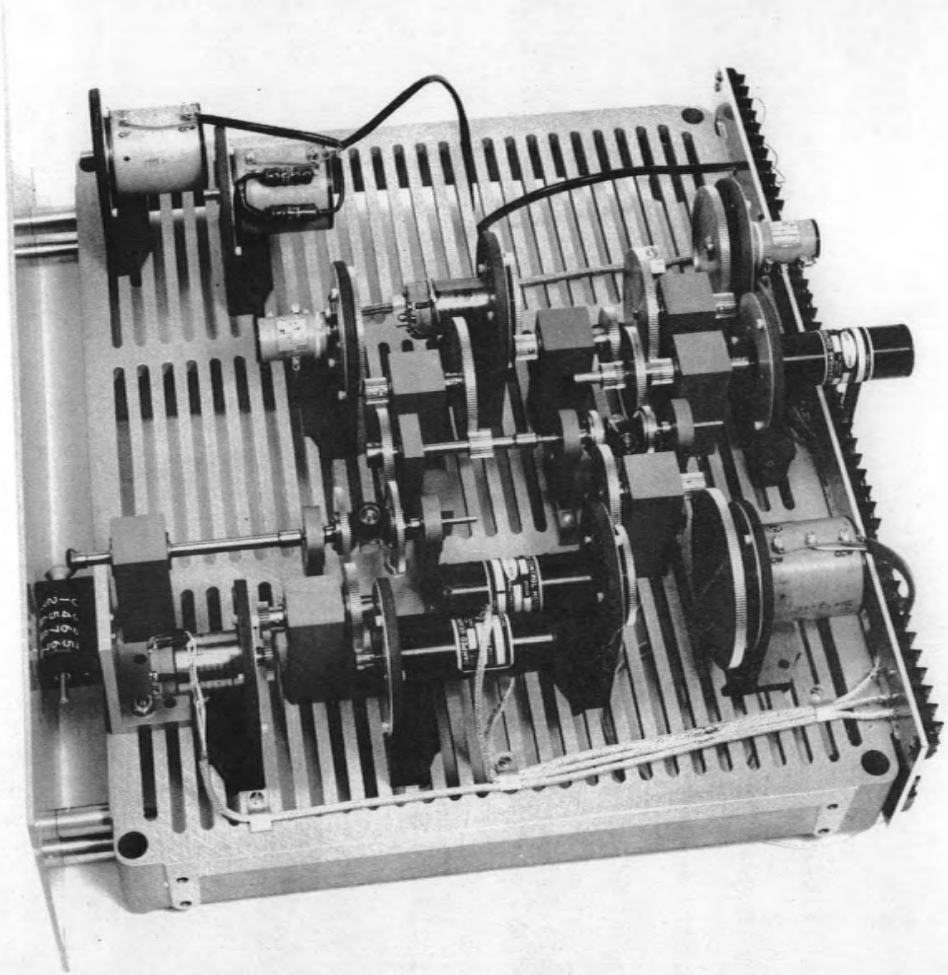

Figure 16. Z Coordinate Computer Deck.

CHAPTER IV

ERROR ANALYSIS OF COMPUTER

Error in the Electro-Mechanical Adder

Computational error in the adder section could come from two sources. Since gear ratios were exact, backlash in a gear train might introduce error when shaft rotation was reversed and since the shaft inputs were considered to be the remote shaft inputs, error in the servo control system connecting the gear train to the inputs became a computational error.

The backlash in an involute gear mesh is dependent on several factors such as accuracy of gear profile, accuracy of hub placement, etc., and gear precision is usually specified by the American Gear Manufacturers Association in terms of total composite error. The Class I gears used here have a total composite error of ± 0.001 inch. This means that when the gear in question is rotated one turn in mesh with a precision master gear, the variation in center-to-center distance lies within ± 0.001 inch.

Since the individual gears in a mesh must be set so that there is sufficient clearance to avoid binding at any point in a revolution, the maximum error of gear precision would mean a possible .002 inches excess of center distance from a perfect mesh condition. Assuming full tolerance necessary, a curve of backlash vs. center-to-center distance (Figure 17) was plotted from an expression derived in the Appendix. Net result of this investigation was the indication that the maximum backlash error from

shafts G to A and F to A was 0.25 mm and was only 0.18 mm from D to A. The adder sections probably introduce no more than 4.0 per cent error of an allowable 6.35 mm. The use of Class I gears over the doubly precise and doubly expensive Class II gears was justified since 0.25 mm is not readable at the output.

The calculated error was checked experimentally by measuring the lost motion in the gear train due to the backlash. To do this a three foot arm with a needle point was attached to a given input shaft and an expanded scale of angle placed behind the needle point. After taking up backlash in one direction, the motion of the input shaft was reversed and the angle necessary to start the dial noted. Motion of the dial was observed with a magnifying glass. Results are shown in Table VI. The factor of two between measured and calculated values is probably due to the fact that the calculated value was based on the use of the total composite error per revolution which means that the calculated column represents expected total error. The measured values were obtained over no more than one tooth of each gear and the tooth-to-tooth error is specified as less than half the total composite error ($\pm$0.0004"). While maximum error might have been seen at some other position of the input shaft, random cancellation of error between individual gears and gear teeth make it probable that the backlash error will never equal the calculated value as long as reasonable care is used in gear train assembly.

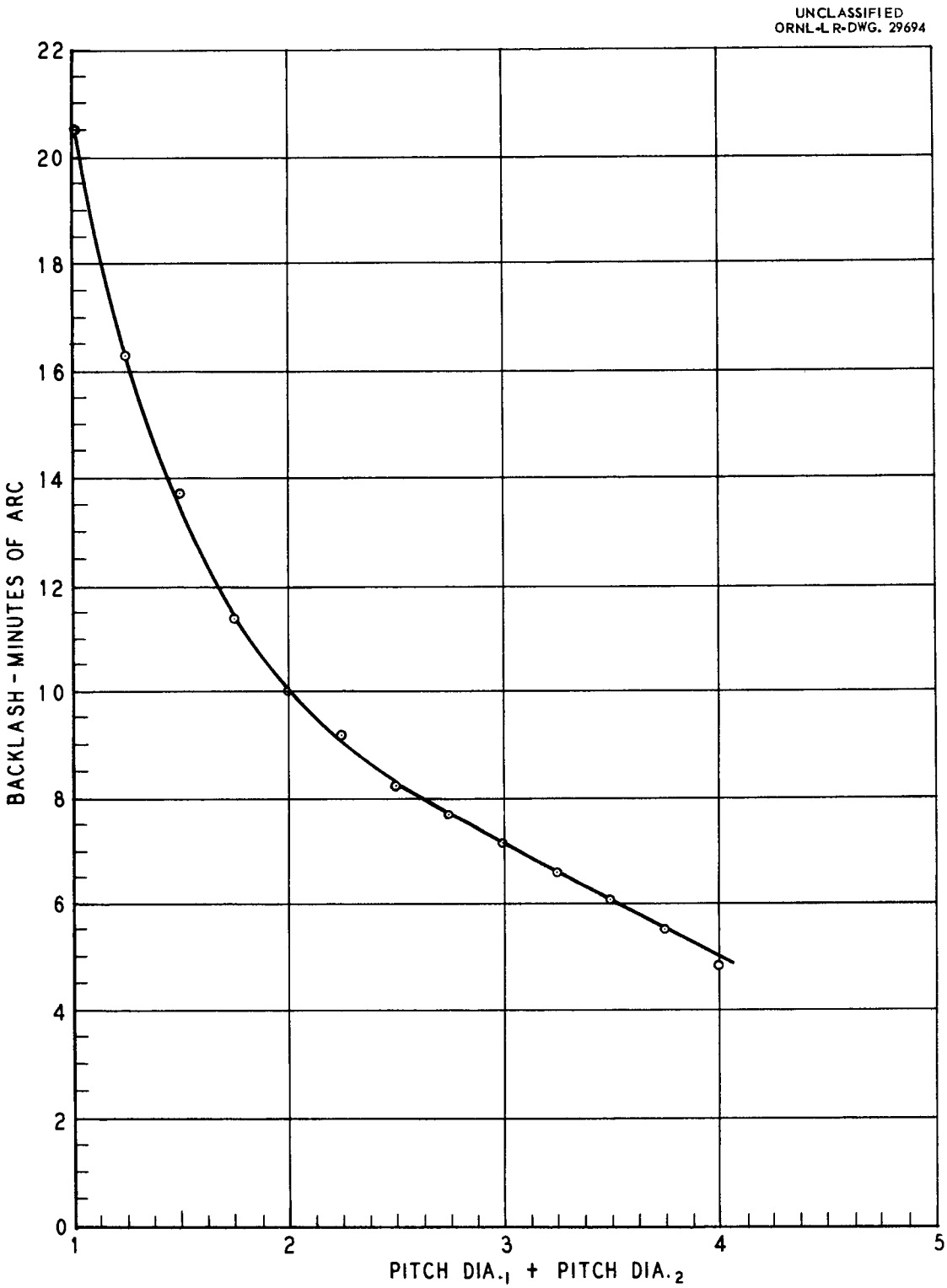

Figure 17. Curve of Backlash vs Center-to-Center Distance for Class I Gears.

TABLE VI

CALCULATED AND MEASURED

BACKLASH ERROR

Input Shaft	Calculated Backlash Indicated mm	Measured Backlash Indicated mm
D	0.18	0.21
F	0.25	0.12
G	0.25	0.14

Error in the Input Servo System

Between the measuring devices and the input shafts of the adders (G and D) is a servo data transmission system consisting of a synchro transmitter, motor, servo amplifier and control transformer as listed in Table II. Error between input and output of this system added to the error in the adders themselves. The other adder input (Shaft F) is coupled to the servo multipliers which are considered in the next section.

Considering the link between shaft H and shaft G, the following data apply.

Slewing condition	10 feet/minute = 305.0 cm/minute = 61 rev/minute of shaft G and H
X gearhead ratio	= 40
Motor speed at slew	= (40) (61) = 2440 rev/minute

The motors used have built-in mechanical dampers and the condition of maximum damping was chosen as the worst condition for error. Due to the sensitivity of the system it was anticipated that the mechanical damping would be used to some extent to minimize oscillation and hunting.

Assuming a starting torque three times the running torque, (0.54) (3) = 1.62 oz-in of torque is needed to start the computer gear train. An error signal to move this load must correspond to $\frac{1.62}{40} = 0.0405$ oz-in or (100) $\frac{(0.041)}{(0.42)} = 9.8\%$ of rated torque. Since stall torque is proportional to control phase voltage, the amplifier must supply 9.8% of 115 volts to the control phase which is 11.3 volts. The chosen amplifier will do this with a 0.001 volt input signal. Since the sensitivity of the synchro control transformer is 1 volt/degree, it would appear that 0.001°

would start the motor moving. This is, however, a perfect condition using the manufacturers data. An angular change of ten minutes of arc put in manually would always start the motor and backlash in the gears between motor and control transformer of slightly more than this would cause a tendency toward oscillation. It should be noted that while 25 millivolts of signal should have caused saturation output of the servo amplifier, noise of this magnitude was present at the input and probably desensitized the amplifier. The calculated backlash of this gear train was 20' (using Figure 17) but was easily made less than 10'.

An experimental set up using two needle-pointed arms and expanded angle scales, one on the input synchro and one on the control transformer was made to determine error of transmission. It was possible with this set-up to swing the input through a $\pm 15^{\circ}$ arc. Several experimental swings from -12.5° to 12.5° showed the servo to be tracking within $\pm 2'$. Swinging the input from $+ 10^{\circ}\ 48'$ to $-10^{\circ}\ 48'$ showed a change in the output dial of 6 cm (the correct value) with error not readable on the dial. No measurement was made to check the accuracy of desirable 1° of follow at slewing speed except to observe that the system apparently was much closer than that where a change was made from plus to minus 15° at speeds much larger than the expected 6.1 rpm of shaft H.

Error in the Multiplier Section

The servo multipliers used depend on a voltage comparison. Referring to Figure 13, it is apparent that the error of the system is dependent on the errors inherent in the precision potentiometers used. In the previous section it was shown that a 0.001 volt input to the servo amplifier was sufficient to start the motor and its attached gear train. If there is more than 0.001 volt between the sine potentiometer and potentiometer Y, for instance, the motor will turn Y to reduce the voltage.

The position of the arms of potentiometers 1 and 2 were set individually so that the voltage across them represented plus and minus the distance between Point A and Point B of Figure 5. Considering that the smallest increment of change on these 2000 ohm potentiometers is shown by the maker to be 0.41 ohms and if 57.5 volts were across it, then

$$\frac{(0.41)}{(2000)} \quad (57.5) \quad = 0.0118 \text{ volts minimum step.}$$

At 3.04 cm/volts, it was, therefore, possible to set the length AB to within 0.36 mm or $\pm$ 0.18 mm.

Assuming the non-linear potentiometers to be perfectly zeroed, the maker specifies that the sine and cosine potentiometers conform to their respective functions within $\pm$ 0.2% of the maximum value at any point, and that the linear potentiometers are linear within $\pm$ 0.05% at any point. Total resistance tolerance for both types is $\pm$ 5%. To calibrate the linear potentiometers properly, trimmer resistors such as c and d of Figure 13 were used.

An equation which defines the action of the multiplier equates the input voltage at the "L" potentiometers to the input voltage at the linear potentiometers.

$$\frac{(L}{2} \text{ max. volts})\ (K_1)\ (\sin V)\ \frac{(\text{cm})}{(\text{volt})} = \frac{(L}{(2)} \text{ max. volts})\ (K_2)\ \frac{(\text{cms})}{(\text{rev})}\ \frac{(\text{rev})}{(\text{volt})}$$

or $K_1\ (\sin V) = K_2$ (within 0.001 volt)

where K_1 = percentage of potentiometer #1 used.

K_2 = percentage of potentiometer Y used.

Using the above equation, the error may be estimated by a mathematical method[1]. Assume that a two foot collimator is used so that L = 134 cm and V is set to + 70°.

Let ΔQ = error in K_2.

$f = (K_1)\ (\sin V) = q_1 q_2$. (sin V is considered a variable.)
Δq_1 = tolerance of K_1.
Δq_2 = tolerance of sin V.

$$\Delta Q = \frac{\partial f}{\partial q_1}\ \Delta q_1 + \frac{\partial f}{\partial q_2}\ \Delta q_2 + \cdots$$

$$= \sin V\ (\Delta q_1) + K_1\ (\Delta q_2).$$

Now $\sin 70^\circ = 0.9397$, $\Delta q_2 = \pm\ 0.2\% = 0.0019$.

$K_1 = 0.80$, $\Delta q_1 = \pm\ 0.1\% = 0.0008$. (rated tolerance of linearity of potentiometers #1 and #2.)

$\Delta Q = 0.0007 + 0.0015 = \pm\ 0.0022$ $(V = 70^\circ)$.

$\Delta Q = 0 + 0.0015 = \pm\ 0.0015$ $(V = 0^\circ)$.

The voltage at the non-linear side of the amplifier may be off by ± 0.22% with V at maximum. The actual voltage will be (57.5) (0.80) (0.9397)

---

[1] Thomas K. Sherwood and Charles E. Reed, Applied Mathematics in Chemical Engineering (New York, McGraw-Hill Book Co., Inc. 1939) p.365.

or 43.23 volts $\pm$ 0.22%. Neglecting the 0.001 volt necessary to start the servo motor drive, potentiometer Y will move to a position where the output voltage equals 43.23 $\pm$ 0.095 volts. The Y potentiometers, however, may be off linearity by (0.0005) (57.5) or 0.029 volts which when added to the previous error allows a possible 0.124 volt error equivalent to 3.77 mm.

The X and Z channels may be considered in the same way and are identical with each other concerning maximum error except that one will be at maximum when the other is at minimum. In this case the equation of operation is

$$\frac{(L}{(2)} \text{ max. volts) } (K_1) \text{ (cos V) (sin H) } \frac{(\text{cms})}{(\text{volt})} = \frac{(L \text{ max. volts})}{(2)} (K_2)$$

$$\frac{(\text{cms})}{(\text{rev})} \frac{(\text{rev})}{(\text{volt})} .$$

$$\text{or } K_1 \text{ (cos V) (sin H)} = K_2.$$

To get the maximum error set V at 0° and H at 90°. Thus

$$\Delta Q = (\cos V) (\sin H) (q_1) + (K_1) (\sin H) (q_2) + (K_1) (\cos V) (q_3).$$

and

$\cos V = 1.0$, $\sin H = 1.0$.

$q_2 = 0.2\% = 0.002$.

$q_3 = 0.15\% = 0.0015$ (resolver tolerance).

$$\Delta Q = (1.0) (1.0) (0.0008) + (0.8) (1.0) (0.002) + (0.8) (1.0) (0.0015)$$

$= \pm 0.0036 = \pm 0.110$ volts. Assuming that the 0.975 transformation ratio of the resolver is not completely compensated by the booster amplifier and may be only 0.995 and that 0.029 volts error may again be added in the X potentiometer, the maximum error becomes $\pm$ 0.140 volts or

$\pm$ 4.25 mm. Both calculations exclude error in the setting of angle V.

An attempt was made to verify the above method of estimating error using the multiplier sections of the computer. Results of one experimental run are tabulated in Table VI. Various angular settings were made using the readout dials of the V and H angles. Points were taken at 10° intervals between V = $\pm$ 70° and H = $\pm$ 90° with some points taken for H up to -270°. L was set to 100 cms for ease in handling the results. The table shows maximum deviations from the true values and also how closely the values were repeated when the angles were first increased and then decreased. If total expected error from multiplier and adder is approximately $\pm$ 4 mm, most discrepancies seem reasonable, as do the values for repeatability since angles could hardly be repeated closer than $\pm$ 0.05° which could mean at least $\pm$ 0.5 mm experimental error. Large deviation can be reduced by distribution. For example where V = 45°, H variable, the large deviation from true value seems to be on the high side and for V = -45°, H variable, error lies on the low side. By shifting the zero point of the cosine potentiometer, maximum deviation could apparently be cut in half at any given point. The optimum calibration settings, however, are arrived at only after tedious and repeated testing. Most of the error above the estimated seems to stem from noise in the servo loops which is especially bad at the zero voltage points, and can result in another mm of error due to a dead zone of $\pm$ 1 mm near zero. In the case of the Z coordinate this occurs at Z = 100 cm due to the coordinate system used.

TABLE VII

MEASURED ACCURACY OF COMPUTER

Angular Settings		Max Discrepancy from true value in mm						Repeatability mm		
V	H	X		Y		Z		X	Y	Z
		above	below	above	below	above	below			
+	0			1	1	2	1		0	±1
-	0			3	3	4	1		±2	±1
0	+	4	4			1	5	±3		±2
0	-	2	1			4	2	±2		
+45°	+	6	5			3	2	±5		+1
+45°	-	6	0			3	0	±1		±1/2
-45°	+	0	8			3	0	0		±1/2
-45°	-	0	3			3	0	0		0

Typical values from Table VI were inserted in the "Measured" column of Table VII as total error since this measurement includes the error in the adder sections. Total error of computation was estimated by taking the square root of the sum of the squares of the individual coordinate errors. In the total estimated error it was assumed that X would be at a nominal minimum value of $\pm$ 2.0 mm when Z was at $\pm$ 5.57 mm. The measured value compares favorably with the allowable $\pm$ 6.35 mm and the estimated $\pm$ 7.2 mm but leaves little room for other errors in the system.

TABLE VIII

ACCURACY OF COMPUTATION

ESTIMATED AND MEASURED

ERROR	X		Y		Z	
	Est. mm	Meas. mm	Est. mm	Meas. mm	Est. mm	Meas. mm
Servo Input	±0.07	0	±0.07	0	±0.07	0
Adder	±0.25	±0.12	±0.25	±0.12	±0.25	±0.12
Multiplier	±4.25	*	±3.77	*	±4.25	*
Total	±4.57	±4.0	±4.09	±2.0	±5.57	±3.0

RMS Total - Estimated - ± 7.2 mm.

RMS Total - Measured - ± 5.36 mm.

* See Text Page 53.

BIBLIOGRAPHY

Chestnut, Harold and Mayer, Robert W. Servomechanisms and Regulating System Design. Volume II. New York: John Wiley and Sons, Inc., 1955.

Houghton, P. S. Gears. Surrey, England: The Technical Press, Ltd., 1952.

Lauer, Henri, Lesnick, Robert and Matson, Leslie E. Servomechanism Fundamentals. New York: McGraw-Hill Book Co., 1947.

Load Computation Manual. Jamestown, N. Y.: Marlin-Rockwell Corp., 1952

Marks, Lionel S. Mechanical Engineers Handbook. Fourth Edition. New York: McGraw-Hill Book Company, Inc., 1941.

Sherwood, Thomas K. and Reed, Charles E. Applied Mathematics in Chemical Engineering. New York: McGraw-Hill Book Company, Inc., 1939.

APPENDIX

Additional Comment on the Details of Gear Train Design

Lauer, Lesnick and Matson[1] indicate that the load inertia may be ignored in comparison with the inertia of the motor armature in a preliminary analysis of a geared servo-system. The number of gears used per motor and the inertias of the driven elements, in this design, however, made at least one typical calculation desirable.

Efficiency of Gears. Reference to more than one source[2,3] led to the use of 95% as the efficiency of a single spur gear mesh including bearings. That this figure is conservative can be seen by comparing the calculated load to the experimental. Starting with a known load such as the dial, each mesh will change the load by the ratio of the teeth on the driving gear to the teeth on the driven gear. The power necessary to drive the train is found from the load seen at the motor shaft divided by 0.95. The loads shown on Figure 10 were done step-by-step, however, using single gear ratios and dividing each by 0.95

Inertia of Gears. Figure 8 is a plot of the approximate inertia of instrument gears in the usable diameters and common materials. Hub sizes are approximately the same for all gears and the pitch diameter was used

---

[1] Henri Lauer, Robert Lesnick and Leslie Matson, Servomechanism Fundamentals (New York: McGraw-Hill Book Company, Inc., 1947) p. 94.

[2] Lionel S. Marks, Mechanical Engineers Handbook (New York: McGraw-Hill Book Company, Inc., 1941) p. 237.

[3] Load Computation Manual (Jamestown, N.Y.: Marlin-Rockwell, Corp., 1952), p. 7.

as the diameter in the expression $J = 1/8\ Md^2$. A face width of 3/16" was chosen as typical and typical hub dimensions from several manufacturers were also used. The values plotted, therefore, are probably within 5% of the actual value of an instrument gear regardless of bore. For face widths other than 3/16", the correction to the plotted values is linear.

Inertia of Gear Trains: For a sample calculation use the gear mesh composed of gears 10, 11, 12, and 13 on Figure 10.

Let the ratio $\frac{11}{10} = N_1$ (larger than 1),

and $\frac{13}{12} = N_2$ (larger than 1).

Assume all gears have the same density and face width and that the inertia of the shafts is neglected. In referring an inertia of one shaft to a different shaft, its actual inertia is changed by the square of the gear ratio[4]. The inertia of the gears referred to shaft E is

$$J_E = J_{10} + \frac{J_{11} + J_{12}}{N_1^2} + \frac{J_{13}}{N_1^2\ N_2^2}$$

The inertia seen at shaft E due to the gears and a type AJ helipot is

$$J_E = J_{10} + \frac{J_{11} + J_{12}}{N_1^2} + \frac{J_{13} + JAJ}{N_1^2 N_2^2}$$

Where $J_{10} = 0.2\ (10^{-4})$ oz-in-sec^2

$J_{11} = 9.5\ (10^{-4})$ oz-in-sec^2

$J_{12} = 0.2\ (10^{-4})$ oz-in-sec^2

---

[4] Chestnut and Mayer, op. cit., p. 115.

$J_{13} = 28.5 \quad (10^{-4})$ oz-in-sec^2.

$JAJ = 0.3$ gm-cm$^2 = 4.2 \quad (10^{-6})$ oz-in-sec^2.

$N_1 = \frac{90}{30} = 3.$

$N_2 = \frac{120}{30} = 4.$

$J_E = 1.48 \quad (10^{-4})$ oz-in-sec^2.

DERIVATION OF BACKLASH FORMULA

The following definitions apply to Figure 18.

α = Specified pressure angle (20° hereafter).

α_e = Pressure angle when two gears are separated slightly.

R_b = Radius of base circle.

R_p = Radius of pitch circle when gears are in perfect mesh. (a and b of small illustration).

R_e = Pitch radius when two gears are separated slightly.

d = Maximum change of center-to-center distance when two Class I gears are rotated in mesh (taken as 0.002" hereafter).

d_1 = Change of pitch radius for gear 1.

d_2 = Change of pitch radius for gear 2.

ϕ = Involute of pressure angle α.

ϕ_e = Involute of pressure angle α_e.

T_b = Tooth width at base circle.

T_p = Tooth width at specified pitch circle.

T_e = Tooth width at pitch circle when gears are separated slightly.

Subscripts 1 and 2 refer to gears of a pair in mesh.

From the properties of the involute[5]

$$\frac{d_1}{d_2} = \frac{R_{p1}}{R_{p2}} \qquad \text{and } \alpha_1 = \alpha_2$$

$$\alpha_{e1} = \alpha_{e2}.$$

Now

$$d = d_1 + d_2.$$

---

[5] P. S. Houghton, Gears (Surrey, England, The Technical Press, Ltd.) 1952, p. 19.

$$= d_1 + d_1 \left(\frac{R_{p2}}{R_{p1}}\right).$$

$$d_1 = \frac{d}{\left(1 + \frac{R_{p2}}{R_{p1}}\right)}.$$

$$\cos \alpha_{e_1} = \frac{R_{p1} \cos \alpha_1}{R_{p1} + \frac{(d)(R_{p1})}{R_{p1} + R_{p2}}}.$$

$$= \frac{(R_{p1} + R_{p2}) \cos \alpha_1}{(R_{p1} + R_{p2} + d)}.$$

Let b = backlash in radians,

then $b = 2(\phi_{e1} - \phi_1) + 2(\phi_{e2} - \phi_2)$.

$= 4(\phi_{e1} - \phi_1)$.

By definition

$$\phi = \text{inv.}\ \alpha = (\tan \alpha - \alpha).$$

$b = 4(\tan \alpha_e - \alpha_e - 0.01490)$ radians. (See Figure 14)

In terms of inches

$$b'' = 2\left[\left(\frac{T_{e1} - T_{p1}}{2}\right)\left(\frac{R_{e1}}{R_{p1}}\right) + \left(\frac{T_{e2} - T_{p1}}{2}\right)\left(\frac{R_{e2}}{R_{p2}}\right)\right],$$

but $\frac{R_{e1}}{R_{p1}} = \frac{R_{e2}}{R_{p2}}$,

and $R_e = \frac{R_p \cos \alpha}{\cos \alpha_e}$.

$$T_e = 2\,R_e\left[\frac{T_p}{2R_p} + \text{inv.}\,\alpha - \text{inv.}\,\alpha_e\right]$$ [6],

where T_p = 1/2 circular pitch = $\frac{\pi}{2DP}$.

DP = Diametral pitch.

Then

$$b'' = A^2B\left[\left(\frac{A-1}{A}\right) + C\left(\frac{F}{D_{p1}\cdot D_{p2}}\right)\right],$$

where $A = \frac{\cos\alpha}{\cos\alpha_e}$, $B = \frac{\pi}{DP}$, $C = (\text{inv.}\,\alpha - \text{inv.}\,\alpha_e)$.

---

[6] Houghton, op. cit., p. 349.

UNCLASSIFIED
ORNL-LR-DWG 25084

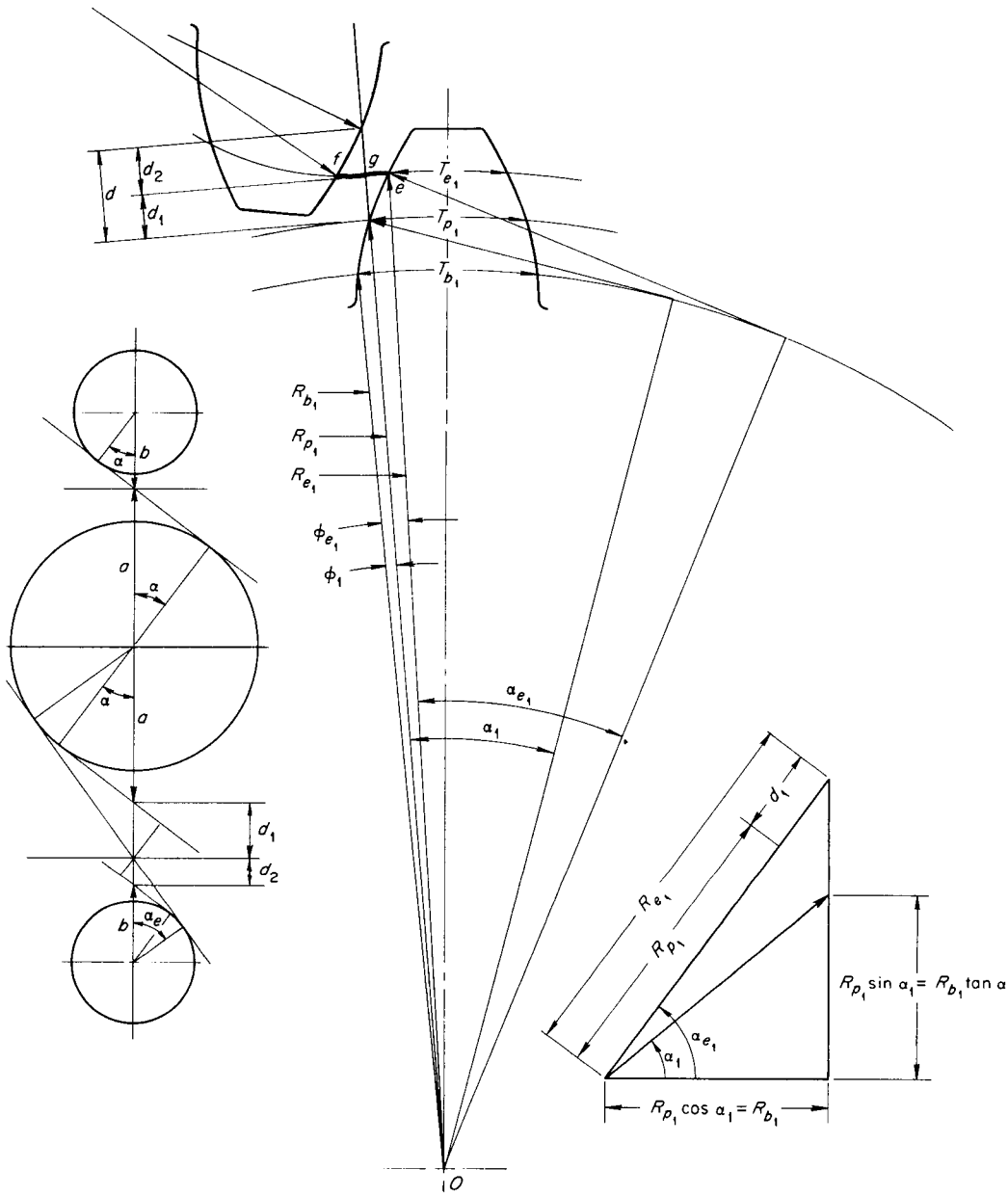

Figure 18. Explanation of Derivation of Backlash Formula.

UNCLASSIFIED
ORNL-LR-DWG. 29695

COORDINATE Y

ROTATION CHART

SHAFT	cm/rev.	MAX. RPM	MAX. NO. OF REV.	REMARKS
A	10.0	30.5	95.2	
B	10.0	30.5	95.2	
C	3.6	0.35	0.35	BASED ON 1.27 CM CHANGE PER MIN.
D	1.0	1.27	1.27	" " " " " " "
E	5.0	61.0	190.4	
F	5.0	33.6	67.2	
G	5.0	61.0	127.0	
H	50.0	6.1	12.7	
J	50.0	6.1	12.7	
K	35.0	4.8	9.6	
L_A	116.0	7.7	8.25	
L_B	72.0	4.2	8.8	

10'/ min = 305 cm / min = 6.1 rpm of 50 cm wheel

$\frac{1}{4}$ rpm and L = 168 cm = 90°/ 60 sec = 168 cm/90°

Figure 19. Y Rotation Chart (Design Sheet 1).

UNCLASSIFIED
ORNL-LR-DWG. 29696

GEAR NO.	TEETH	PITCH	PITCH DIA.	BORE	MAT'L.	INERTIA
			IN.	IN.		X(10⁻⁴)OZ-IN-SEC
1	36	72	.500	.125	ALUM.	0.06
2	36	72	.500	.125	ST. ST.	0.16
3	120	72	1.666	.688	" "	DIFF. END GEAR
4	120	72	1.666	.688	" "	" " "
5	24	72	.333	.125	" "	0.13
6	120	72	1.666	.250	" "	18.0
7	120	72	1.666	.250	" "	18.0
8	40	64	.625	.250	" "	0.8
9	55	64	.859	.120	" "	1.6
10	30	64	.469	.250	" "	0.3
11	130	64	2.031	.250	" "	41.65
12	30	64	.469	.250	" "	0.3
13	160	64	2.500	.125	" "	90.6
14	65	72	.903	.688	" "	DIFF. END GEAR
15	130	72	1.806	.250	" "	24.5
16	30	64	.469	.250	" "	0.3
17	210	64	3.281	.250	" "	258.0
18	NOT	USED	——	——	——	——
19	65	72	.903	.688	" "	DIFF. END GEAR
20	130	72	1.806	.250	" "	24.5
21	32	64	.500	.250	" "	0.4
22	80	64	1.250	.250	" "	6.0
23	30	64	.469	.250	" "	0.3
24	120	64	1.875	.120	" "	28.5
25	30	64	.469	.250	" "	0.3
26	130	64	2.031	.250	" "	41.5
27	30	64	.469	.250	" "	0.3
28	100	64	1.563	.125	" "	13.5
29						
30						
EXTRAS						
	160	64	2.500	.250	" "	

COORDINATE Y

Figure 20. Y Gear Specification (Design Sheet 3).

UNCLASSIFIED
ORNL-LR-DWG. 29697

COORDINATE Z

ROTATION CHART

SHAFT	cm/rev.	MAX. RPM	MAX. NO. OF REV.	REMARKS
A	10.0	30.5	139.0	
B	10.0	30.5	139.0	
C	3.6	0.35	0.35	
D	1.0	1.27	1.27	
E	5.0	61.0	278.0	
F	5.0	33.6	67.2	
G	5.0	61.0	244.0	
H	50.0	6.1	24.4	
J	50.0	6.1	24.4	
K	35.0	4.8	9.6	
L_A	142.0	2.15	9.8	
L_B	142.0	2.15	8.6	

10'/ min = 305 cm / min = 6.1 rpm of 50 cm wheel

$\frac{1}{4}$ rpm and L = 168 cm = 90°/ 60 sec = 168 cm/90°

Figure 21. Z Rotation Chart (Design Sheet 1).

UNCLASSIFIED
ORNL-LR-DWG. 29698

GEAR NO.	TEETH	PITCH	PITCH DIA.	BORE	MAT'L.	INERTIA
			IN.	IN.		X (10⁻⁴) OZ-IN-SEC
1	36	72	.500	.125	ALUM.	0.06
2	36	72	.500	.125	ST. ST.	0.16
3	120	72	1.666	.688	" "	DIFF. END GEAR
4	120	72	1.666	.688	" "	" " "
5	24	72	.333	.125	" "	0.13
6	120	72	1.666	.250	" "	10.0
7	120	72	1.666	.250	" "	18.0
8	40	64	.625	.250	" "	0.8
9	55	64	.859	.120	" "	1.6
10	30	64	.469	.250	" "	0.3
11	160	64	2.500	.250	" "	90.6
12	30	64	.469	.250	" "	0.3
13	160	64	2.500	.125	" "	90.6
14	65	72	.903	.688	" "	DIFF. END GEAR
15	130	72	1.806	.250	" "	24.5
16	30	64	.469	.250	" "	0.3
17	210	64	3.281	.250	" "	258.0
18	NOT	USED	—	—	—	—
19	65	72	.903	.688	" "	DIFF. END GEAR
20	130	72	1.806	.250	" "	24.5
21	32	64	.500	.250	" "	0.4
22	80	64	1.250	.250	" "	6.0
23	30	64	.469	.250	" "	0.3
24	120	64	1.875	.120	" "	28.5
25	30	64	.469	.250	" "	0.3
26	160	64	2.500	.250	" "	90.6
27	30	64	.469	.250	" "	0.3
28	160	64	2.500	.125	" "	90.6
29						
30						
EXTRAS						

COORDINATE Z

Figure 22. Z Gear Specification (Design Sheet 3).

UNCLASSIFIED
ORNL-LR-DWG. 29699

COORDINATE V

ROTATION CHART

SHAFT	°/rev	MAX RPM	MAX NO. OF REV.	REMARKS
A	360	.246	.39	RATED SPEED FOR ± 70°
B	33.8	2.58	4.15	MOTOR DRIVES SLIGHTLY SLOWER THAN TILT MOTOR
C	36.0	2.42	3.89	DRIVE BY MOTOR IV RATHER THAN TILT MOTOR
D	36.0	2.5	3.9	
E	36.0	2.5	3.9	
F	36.0	2.5	3.9	
G	20	4.5	7.0	
H	10	9.0	14.0	
J	36	2.5	3.9	
	360°	.246	.39	CASE OF SYNCHRO

10'/ min = 305 cm / min = 6.1 rpm of 50 cm wheel

$\frac{1}{4}$ rpm and L = 168 cm = 90°/ 60 sec = 168 cm/90°

Figure 23. V Rotation Chart (Design Sheet 1).

UNCLASSIFIED
ORNL-LR-DWG. 29700

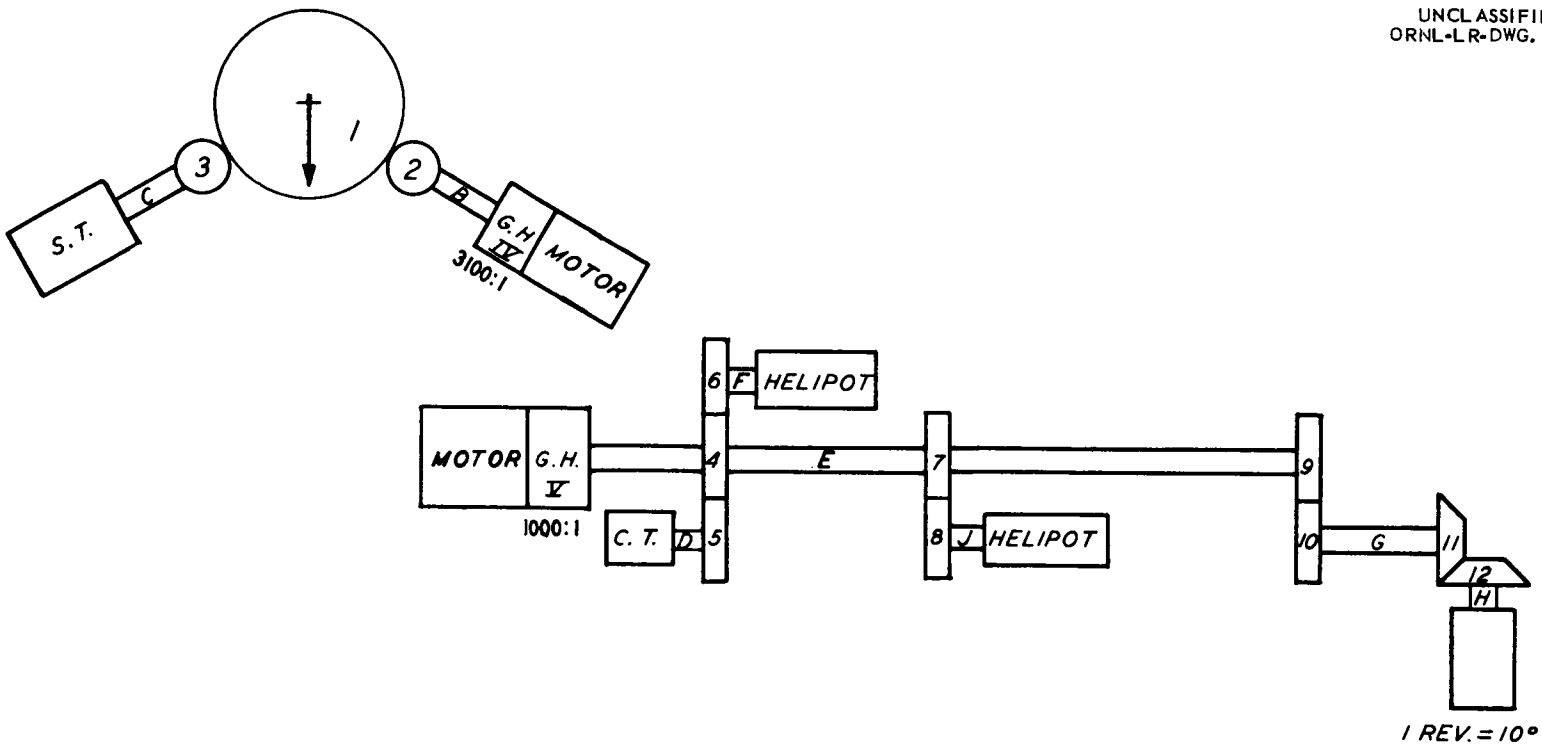

COORDINATE V

Figure 24. V Gear Layout (Design Sheet 2).

UNCLASSIFIED
ORNL-LR-DWG. 29701

GEAR NO.	TEETH	PITCH	PITCH DIA.	BORE	MAT'L.	INERTIA
			IN.	IN.		X (10-4) OZ-IN-SEC
1	640	64	10.000		ALUM.	
2	60	64	.938	.125	ST. ST.	
3	64	64	1.000	.120	" "	
4	100	64	1.563	.250	" "	
5	100	64	1.563	.120	" "	
6	100	64	1.563	.250	" "	
7	100	64	1.563	.250	" "	
8	100	64	1.563	.250	" "	
9	90	64	1.406	.250	" "	
10	50	64	.781	.250	" "	
11	72	72	1.000	.125	ALUM.	
12	36	72	.500	.125	ST. ST.	
13						
14						
15						
16						
17						
18						
19						
20						
21						
22						
23						
24						
25						
26						
27						
28						
29						
30						
EXTRAS						

COORDINATE V

Figure 25. V Gear Specification (Design Sheet 3).

UNCLASSIFIED
ORNL-LR-DWG. 29702

COORDINATE **H**

ROTATION CHART

SHAFT	°/rev	MAX RPM	MAX NO. OF REV.	REMARKS
A	45.0	2.0	6.0+	AT LEAST
B	45.0	2.0	6.0+	270° ROTATION
C	22.5	4.0	12.0+	UP TO 300°
D	360.0	.256	.75+	MAY BE USED
E	10.0	9.0	27.0+	
F	10.0	9.0	27.0+	
INTERNAL GEAR	360°	.256	.75+	ROT. SPEED FIXED

10'/ min = 305 cm / min = 6.1 rpm of 50 cm wheel

$\frac{1}{4}$ rpm and L = 168 cm = 90°/60 sec = 168 cm/90°

Figure 26. H Rotation Chart (Design Sheet 1).

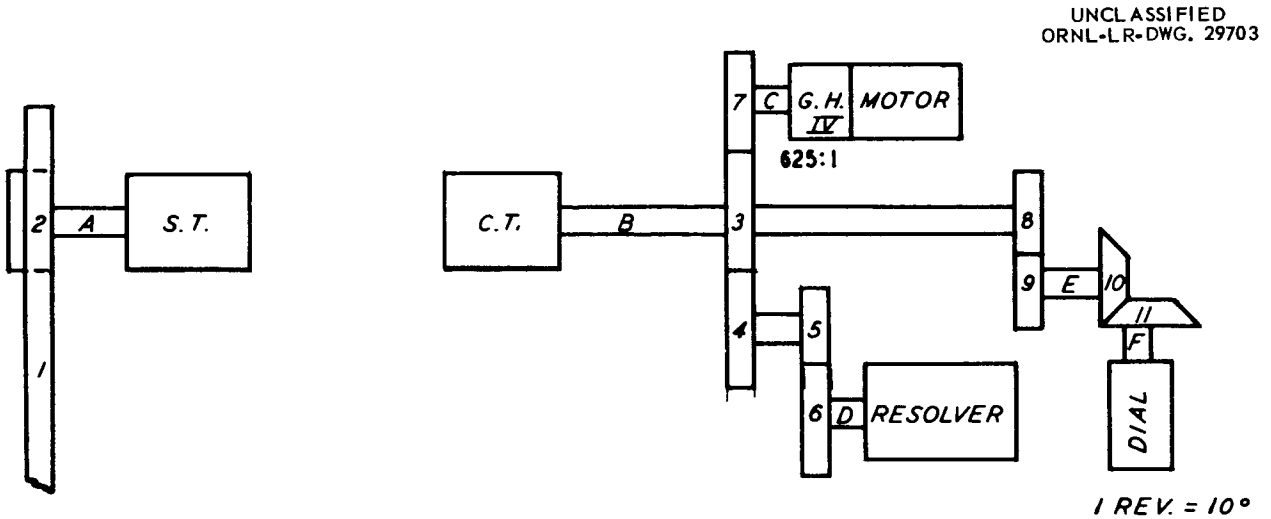

COORDINATE "H"

Figure 27. H Gear Layout (Design Sheet 2).

UNCLASSIFIED
ORNL-LR-DWG. 29704

GEAR NO.	TEETH	PITCH	PITCH DIA.	BORE	MAT'L.	INERTIA
			IN.	IN.		X (10⁻⁴) OZ-IN-SEC
1	496	32	15.500			INTERNAL GEAR
2	62	32	1.94	.120		ANTI-BACKLASH
3	40	64	.625	.250		
4	160	64	2.500	.250		ANTI-BACKLASH
5	64	64	1.000	.250		
6	128	64	2.000	.2402		
7	21	64	.328	.125		
8	135	64	2.11	.250		
9	30	64	.469	.250		
10	36	72	.500	.125		
11	36	72	.500	.125		
12						
13						
14						
15						
16						
17						
18						
19						
20						
21						
22						
23						
24						
25						
26						
27						
28						
29						
30						
EXTRAS						

COORDINATE H

Figure 28. H Gear Specification (Design Sheet 3).

Figure 29 is a picture of the input synchros and their drives. The small central assembly shows the synchro shaft with an anti-backlash gear which meshes with an internal gear on the vertical mechanism to measure the H angle. The wheel on the right is 50 cm in circumference and measures X. A similar one measures Z. The wheel on the left measures Y by means of a wire wrapped around it. The motor keeps the wire under tension.

Figures 30 and 31 show the pendulum mechanism used to measure V angle without the waterproofing case over it. The pendulum actuates contacts at the top so that the motor drives the big wheel in close coincidence with the pendulum when the case is tilted. The synchro is geared up by 10 to 1.

UNCLASSIFIED
PHOTO 42585

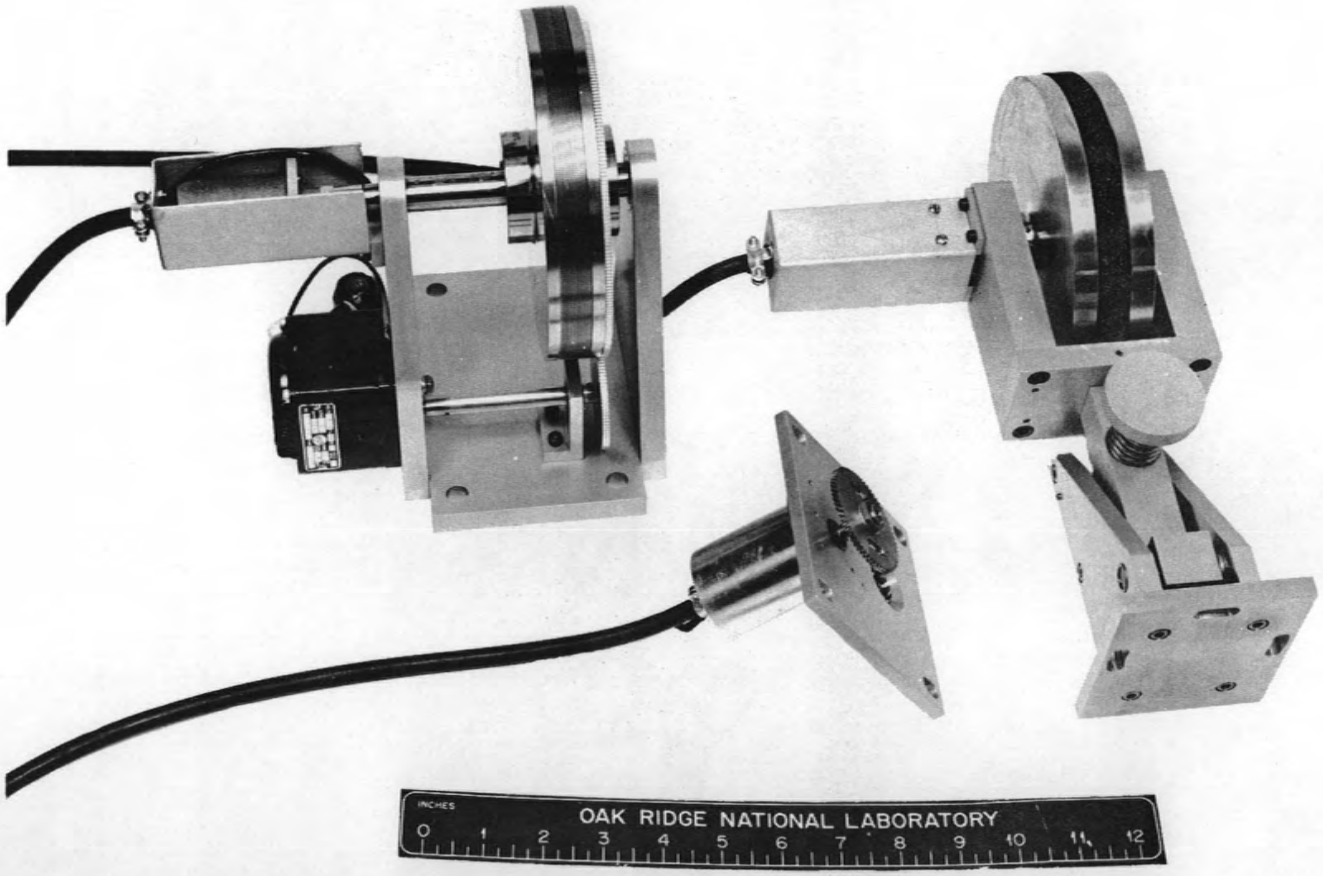

Figure 29. Horizontal, Vertical and H Angle Measurement Devices.

UNCLASSIFIED
PHOTO 42584

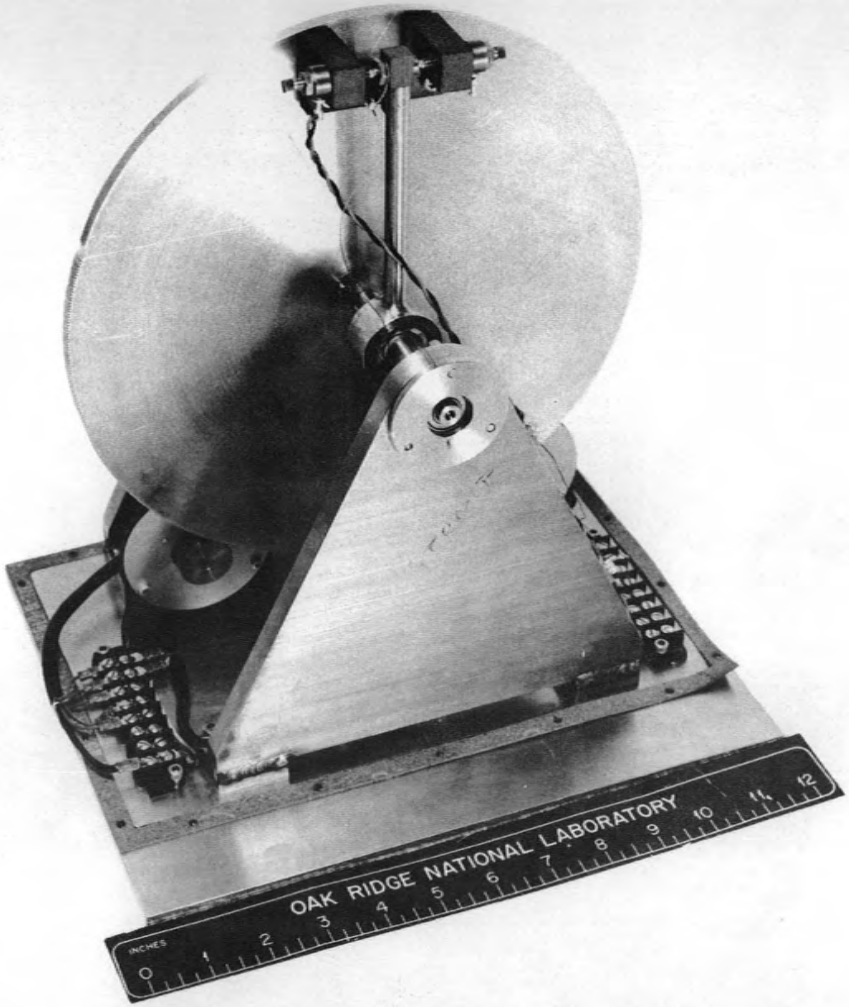

Figure 30. Vertical Angle Measurement Device, Front View.

UNCLASSIFIED
PHOTO 42582

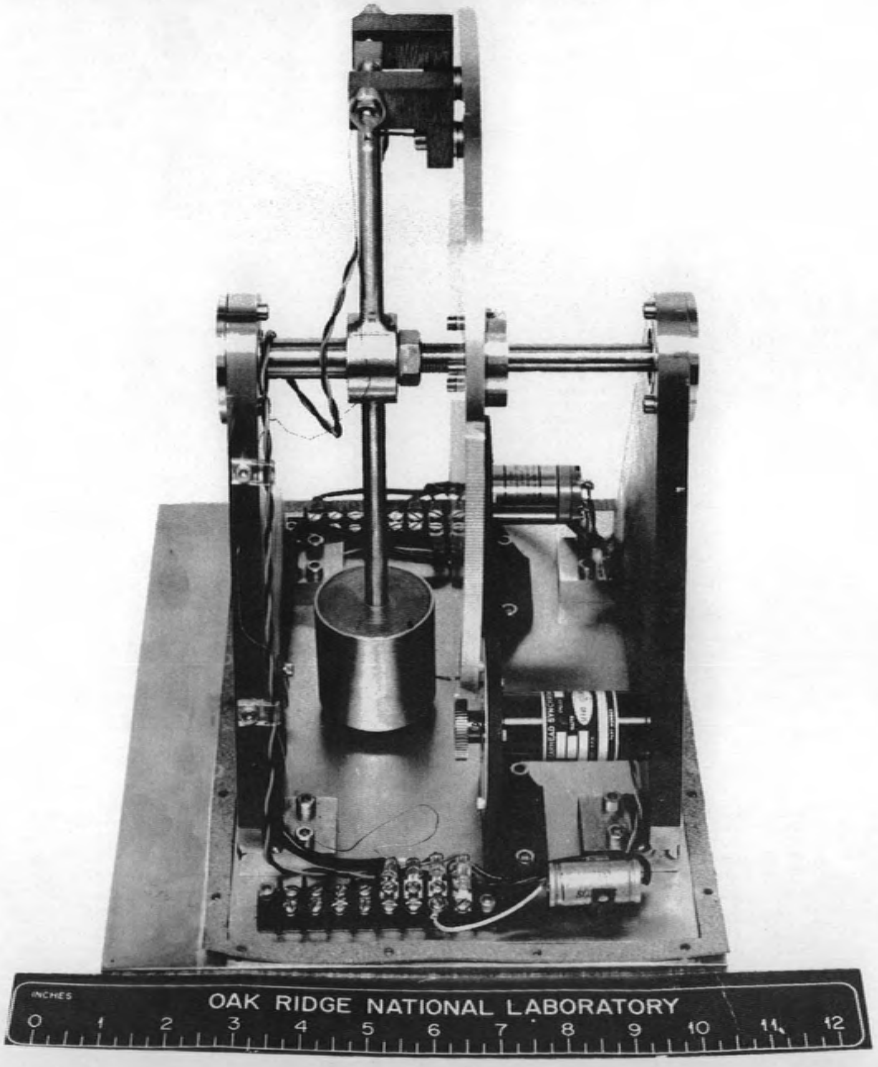

Figure 31. Vertical Angle Measurement Device, Side View.

ORNL-2534
Instruments
TID-4500 (13th ed., Rev.)
February 15, 1958

INTERNAL DISTRIBUTION

1. C. E. Center
2. Biology Library
3. Health Physics Library
4-5. Central Research Library
6. Reactor Experimental Engineering Library
7-26. Laboratory Records Department
27. Laboratory Records, ORNL R.C.
28. A. M. Weinberg
29. L. B. Emlet (K-25)
30. J. P. Murray (Y-12)
31. J. A. Swartout
32. E. H. Taylor
33. E. D. Shipley
34. A. H. Snell
35. C. S. Harrill
36. E. P. Blizard
37. M. L. Nelson
38. W. H. Jordan
39. G. E. Boyd
40. R. A. Charpie
41. S. C. Lind
42. F. L. Culler
43. A. Hollaender
44. J. H. Frye, Jr.
45. M. T. Kelley
46. J. L. Fowler
47. R. S. Livingston
48. K. Z. Morgan
49. T. A. Lincoln
50. A. S. Householder
51. C. P. Keim
52. C. E. Winters
53. J. D. Kington, Jr.
54. K. M. Henry
55. D. Phillips
56. A. J. Miller
57. M. J. Skinner
58. R. R. Dickison
59. J. A. Harvey
60. A. Simon
61. F. C. Maienschein
62. C. E. Clifford
63. A. D. Callihan
64. R. R. Coveyou
65. W. Zobel
66. F. L. Keller
67. C. D. Zerby
68. D. K. Trubey
69. S. K. Penney
70. R. W. Peelle
71. G. T. Chapman
72. T. A. Love
73. E. B. Johnson
74. G. DeSaussure
75. C. J. Borkowski
76-100. D. J. Knowles
101. ORNL - Y-12 Technical Library, Document Reference Section

EXTERNAL DISTRIBUTION

102. Division of Research and Development, AEC, ORO
103-718. Given distribution as shown in TID-4500 (13th ed., Rev.) under Instruments category (100 copies - OTS)