MARTIN MARIETTA ENERGY SYSTEMS LIBRARIES
3 4456 0361278 5

CENTRAL RESEARCH LIBRARY
DOCUMENT COLLECTION

4

ORNL-2569
Instruments

Cy. 4

# A STUDY OF PRE-ACCELERATION IN BETA-RAY SPECTROSCOPY

W. O. Olson
H. H. Hubbell, Jr.
R. D. Birkhoff

CENTRAL RESEARCH LIBRARY
DOCUMENT COLLECTION
LIBRARY LOAN COPY
DO NOT TRANSFER TO ANOTHER PERSON
If you wish someone else to see this document, send in name with document and the library will arrange a loan.

OAK RIDGE NATIONAL LABORATORY
operated by
UNION CARBIDE CORPORATION
for the
U.S. ATOMIC ENERGY COMMISSION

LEGAL NOTICE

This report was prepared as an account of Government sponsored work. Neither the United States, nor the Commission, nor any person acting on behalf of the Commission:

A. Makes any warranty or representation, express or implied, with respect to the accuracy, completeness, or usefulness of the information contained in this report, or that the use of any information, apparatus, method, or process disclosed in this report may not infringe privately owned rights; or

B. Assumes any liabilities with respect to the use of, or for damages resulting from the use of any information, apparatus, method, or process disclosed in this report.

As used in the above, "person acting on behalf of the Commission" includes any employee or contractor of the Commission to the extent that such employee or contractor prepares, handles or distributes, or provides access to, any information pursuant to his employment or contract with the Commission.

ORNL-2569

Contract No. W-7405-eng-26

HEALTH PHYSICS DIVISION

# A STUDY OF PRE-ACCELERATION IN BETA-RAY SPECTROSCOPY

W. O. Olson
H. H. Hubbell, Jr.
R. D. Birkhoff

Submitted as a thesis to the Faculty of the Graduate School of Vanderbilt University in partial fulfillment of the requirements for the degree of Master of Science in physics.

DATE ISSUED

SEP 19 1958

OAK RIDGE NATIONAL LABORATORY
Oak Ridge, Tennessee
operated by
UNION CARBIDE CORPORATION
for the
U. S. ATOMIC ENERGY COMMISSION

MARTIN MARIETTA ENERGY SYSTEMS LIBRARIES

3 4456 0361278 5

## ACKNOWLEDGMENTS

I would like to express my appreciation to Drs. R. D. Birkhoff and H. H. Hubbell, Jr., of the Health Physics Division at Oak Ridge National Laboratory for suggesting and supervising this thesis, to my graduate advisor, Dr. J. I. Hopkins of Vanderbilt University, and to Dr. E. E. Anderson, Education Director of the Health Physics Division at Oak Ridge National Laboratory.

I would also like to extend my appreciation to the Oak Ridge Institute of Nuclear Studies which made this research possible through a Graduate Research Fellowship. They also provided the AEC Special Radiological Physics Fellowship which made my study at Vanderbilt University possible.

TABLE OF CONTENTS


| | | Page |
|---|---|---|
| Acknowledgments | | ii |
| List of Figures | | iv |
| I. | Introduction | 1 |
| II. | Previous Work on Pre-Acceleration | 3 |
| III. | Theory | |
| | A. Design of a Pre-Accelerator | 5 |
| | B. Effect of Acceleration on Particle Trajectories | 9 |
| | C. Correction of Counts with Acceleration to a Momentum Distribution | 16 |
| | D. The Effect of Acceleration Upon Count Rate | 20 |
| | E. Effect of Acceleration on Resolution | 23 |
| | 1. Energy Resolution | 23 |
| | 2. Momentum Resolution | 25 |
| IV. | Apparatus and Techniques | |
| | A. The Spectrometer | 28 |
| | B. The Geiger Counter | 30 |
| | C. The Counter Monitor | 35 |
| | D. Construction of the Pre-Accelerator | 40 |
| | E. The High Voltage Supply | 42 |
| | F. Preparation of a Thin Source of $Pm^{147}$ | 44 |
| V. | Experimental Results | |
| | A. Testing the Pre-Accelerator at High Energies | 48 |
| | B. The Zero Energy Peak | 51 |
| | C. Counter Window Transmission | 52 |
| | D. Variation of Focusing with Acceleration | 58 |
| | E. Variation of Focusing with Changes in Source Size | 60 |
| VI. | Discussion and Summary | 64 |
| VII. | Conclusions | 66 |
| | Bibliography | 68 |

# LIST OF FIGURES


| | | Page |
|---|---|---|
| 1. | Effect of Ratio of Sphere Radii in a Pre-Accelerator | 8 |
| 2. | Coordinate System for Electron Trajectories | 11 |
| 3. | Fractional Increase in Lateral Displacement of Trajectories as a Function of Ratio of Added Energy to Energy at Source | 15 |
| 4. | Variation of Count Rate with Energy at Source for Allowed Beta Spectrum and Fixed Pre-Acceleration Voltage | 22 |
| 5. | Effect of Pre-Acceleration on Momentum Resolution | 27 |
| 6. | Cross Sectional View of Geiger Counter | 31 |
| 7. | Cross Sectional View of Counter Monitor | 36 |
| 8. | Schematic of Counter Monitor Circuit | 39 |
| 9. | Cross Sectional View of the Pre-Accelerator | 41 |
| 10. | Schematic of the High Voltage Supply | 43 |
| 11. | Cross Sectional View of High Voltage Leads | 45 |
| 12. | Gold$^{198}$ K-Conversion Peak with Various Accelerating Voltages | 49 |
| 13. | Shift in Apparent Energy of Conversion Peak with Acceleration Voltage | 50 |
| 14. | Fermi Plot of Pm$^{147}$ | 56 |
| 15. | Transmission Curve of Typical Counter Window | 57 |
| 16. | Focusing as a Function of Energy at Source for Various Added Energies | 59 |
| 17. | The Dependence of Focusing on Source Geometry | 61 |

## ABSTRACT

Experimental and theoretical studies show that acceleration of beta rays between the source and a beta spectrometer can increase the count rate by increasing the momentum increment transmitted by the spectrometer and can reduce considerably the absorption in the detector window. A double hemispherical accelerator was constructed with annular slots to permit electrons to escape into the acceptance angle of a spectrometer of the solenoidal homogeneous magnetic field type. An unsupported cylindrical window Geiger counter of .5 mg/cm$^2$ formvar was constructed and used in the spectrometer. The transmission of the counter was evaluated by noting the departure from linearity of the Fermi plot of a thin source of $Pm^{147}$. The transmission of the counter window was 100% down to about 80 kev, fell to 90% about 45 kev, then dropped steeply to a cutoff at 15 kev. Theoretical studies indicate that the true momentum distribution $N_1(p)$ is related to the observed counts per minute (c/m) by

$$N_1(p) = \frac{c/m}{(I_{p'})^2} \; I_p \left[ 1 + \frac{\Delta E}{T+m_o c^2} \right]$$

where $I_p$ is the current for which the spectrometer transmits beta rays of initial energy T. The larger current $I_{p'}$ is the current at which the c/m are observed for beta rays of initial energy T which acquire an additional energy $\Delta E$ in the accelerator. After the effects of counter window absorption and the artificial widening of the momentum window had been removed from the spectra, the focusing effect of the accelerating field could be observed. More focusing was found for

small disk sources than for larger ones. Ring sources emitting through small axial apertures behaved similarly, with smaller apertures giving greater focusing. For example, the ratio between the corrected momentum spectrum with acceleration to that without acceleration varied from 1 for $\Delta E/T = 0.1$ to 1.8 for $\Delta E/T = 1$ for a particular ring source. Calculations of the effects of the accelerating field on the electron trajectories indicate that no distortion should be expected for the first case, but that considerable rotation of trajectories about the axis of the spectrometer would be expected in the latter case. Theoretically such rotations may be avoided for quite large ($\sim 10$) values of $\Delta E/T$ provided the ratio of radii of the inner and outer spheres is kept below 0.1, but no experimental verification was possible here. An $\alpha$-ray source was used to monitor counter efficiency. This source could be uncovered by remote control either manually or as a part of the automatic spectrometer scanning cycle.

# I. INTRODUCTION

The experimental analysis of the low energy regions of beta spectra has proven to be quite difficult because these electrons have insufficient energy to penetrate most ordinary counter windows. This problem has been attacked both by using thinner windows and by adding energy to these electrons. Very thin windows have been made, but there is a lower limit on the practical thickness imposed by conditions of strength and durability. Furthermore, even a windowless counter shows an effective window thickness due to escaping counter gas.

Post accelerating has been useful and simple to achieve, but this technique is limited to accelerating voltages less than the cut-off energy of the counter window. With voltages above this a large increase in background is noted.

Pre-acceleration has been used by several investigators in an effort to avoid the high background associated with post acceleration. These investigators have generally been successful in getting electrons through counter windows. However, in many cases this work is in doubt due to the lack or incompleteness of knowledge of the action of the accelerator.

The major emphasis of this paper is on the experimental and theoretical analysis of the action of a pre-accelerator of the concentric spheres type.

The beta spectrometer used in this investigation has been employed recently to measure the spectrum of a beta emitter uniformly dispersed in a homogeneous medium.[1] This work attempts to provide a test of the Spencer-Fano theory for electron slowing-down spectrum.[2] The results obtained show discrepancies from the theory in the lower energy region which may be due to an incomplete knowledge of transmission in the counter in this region. Also, data were limited to fairly high energies due to the counter window cut-off.

This spectrometer was designed to operate automatically and thus it was felt that some method should be devised to provide for periodic monitoring of counting efficiency during long experimental runs.

The first problem then was to provide the spectrometer with a counter monitoring system to assure a standard counting efficiency.

The second problem was to develop a counter that would permit low energy electrons to be counted. Its transmission had to be determined so that corrections to data could be made.

The third problem was to design and build a pre-accelerator so that spectra of electrons could be determined at very low energies without the need for making excessive corrections in the count due to focusing or transmission effects.

---

1 Birkhoff, R. D., Hubbell, H. H., Jr., Cheka, J. S., and Ritchie, R. H., Health Physics, 1, 27 (1958).

2 Spencer, L. V., and Fano, U., Phys. Rev., 93, 1172 (1954).

## II. PREVIOUS WORK ON PRE-ACCELERATORS

Accelerators have been used in spectrometers by a number of investigators in attempts to work at low energies.

Acceleration of electrons after their passage through the defining slits has been attempted by Agnew,[3] Butt,[4] and Langer and Cook.[5] One of the major advantages of post acceleration is that it occurs after energy selection has taken place and thus should cause no significant change in spectrometer transmission. The principal disadvantage lies in the fact that the background for the counter rises sharply when the post-acceleration voltage is applied. This can be reduced by maintaining the acceleration voltage below the cut-off energy of the counter window, but this has the serious disadvantage that a lower limit is placed upon spectral energies which can be investigated.

A number of pre-accelerators have also been built. Schneider, et. al.[6] applied a potential between the source and the first defining slit. A correction was made for the focusing effect produced by the accelerating field. Kobayashi[7] used coaxial cones in conjunction with a concentric spherical electrostatic spectrometer and calculated a

---

3 Agnew, Phys. Rev., 77, 685 (1950).

4 Butt, D. K., Phys. Soc. of London, 63A, 986 (1950).

5 Langer, L. M., and Cook, C. S., Rev. Sci. Instr. 19, 257 (1948).

6 Schneider, H., Huber, O., Humbel, F., de Shalit, A., and Zünti, W., Helv. Phys. Acta, 25, 259 (1952).

7 Kobayashi, Yoshiyuke, J. of Phys. Soc. of Japan, 8, No. 4, 440 (1953).

correction curve for focusing caused by the accelerator. Spherical pre-accelerators have been used by Chang and Cook[8] and by Freedman, Porter, Wagner and Day.[9] More recently a combination of pre- and post acceleration has been used by Juillard and Moussa[10] to measure electron spectra at very low energies. Cook[11] has written an aritcle summarizing the difficulties of acceleration.

---

8 Chang, Chia-hua, and Cook, C. S., Nucleonics, 10, 24 (1952).

9 Freedman, M. S., Porter, F. T., Wagner, F. Jr., and Day, P. P., Phys. Rev., 108, 836 (1957).

10 Juillard, A., and Moussa, M. A., J. de Physique et le Radium, 19, 94 (1958).

11 Cook, C. S., Technical Report 105, "Experimental Technique in Beta Spectroscopy", Washington University, (1953).

# III. THEORY

## A. Design of a Pre-Accelerator

In designing an electrostatic accelerator for a beta spectrometer, certain factors must be taken into consideration. The first is the general geometrical shape. A concentric spherical accelerator was decided upon since it was felt this would give the least distortion to beta-ray trajectories. It was also felt that the spheres should be machined from solid blocks with slits cut through the spherical surfaces to reduce the number of rough edges which could cause regions of high field such as found in spheres made from a grid structure. Also, a grid-type screen may have only partial transmission.

To cause a minimum of distortion, the spheres should be of such size that the acceleration will take place in a region in which the paths of the beta particles are essentially along radii of the spheres. In the spectrometer considered here the trajectories were bounded initially by two coaxial cones having coincident apexes and with sides making slightly more and slightly less than 45 degrees respectively with the axis of the spectrometer. The acceleration should then take place as close to this apex position as possible. However, the gap between the spheres should be large enough to reduce the electric field at the surfaces of the spheres to values for which cold cathode emission is small.

Once the size of the outer sphere has been established from the considerations of the previous paragraph, the radius of the inner sphere must be determined. First of all, the field strength at the inner sphere for a given value of applied voltage on the accelerator should be a minimum for any given radius $r_2$ of the outer sphere.

It is easily shown that the electric field between two spheres of radius $r_1$ and $r_2$ at the surface of the inner sphere is given by

$$E = \frac{V}{r_1 - r_1^2/r_2} \quad , \tag{1}$$

where V is the applied voltage.

In order to minimize E as a function of $r_1$, one computes $\frac{dE}{dr_1}$ ,

$$\frac{dE}{dr_1} = - \frac{V}{\left[ r_1 - r_1^2/r_2 \right]^2} \quad (1 - 2r_1/r_2) \quad , \tag{2}$$

and then by setting $\frac{dE}{dr_1} = 0$, finds that

$$r_1 = r_2/2 \quad . \tag{3}$$

This means that for a given value of the potential difference applied between the spheres and for a given size of the outer sphere, the inner sphere must have half the radius of the outer sphere so that the field will have the smallest value possible at the inner sphere. A graph of the electric field at the surface of the inner sphere in arbitrary units for a fixed applied voltage as a function of the ratio of the radii of the inner and outer spheres is shown in Figure 1.

The problem may be stated in a slightly different manner. Assume that $r_2$ and the maximum value of the electric field $E_m$ are fixed. What value of inner sphere radius $r_1$ will bring about the greatest gain in electron energy? Thus

$$\frac{V}{E_m} = (1/r_1 - 1/r_2)\, r_1^{\,2} \quad \text{and} \quad \frac{d(V/E_m)}{dr_1} = 1 - 2r_1/r_2 \quad . \qquad (4)$$

If one sets this derivative equal to zero and solves for $r_1$, it must again be equal to $r_2/2$.

Thus the ratio of outer sphere to inner sphere radii must be 2:1 both for a maximum energy addition for a given maximum field and for the smallest field at the inner sphere when the potential difference is fixed.

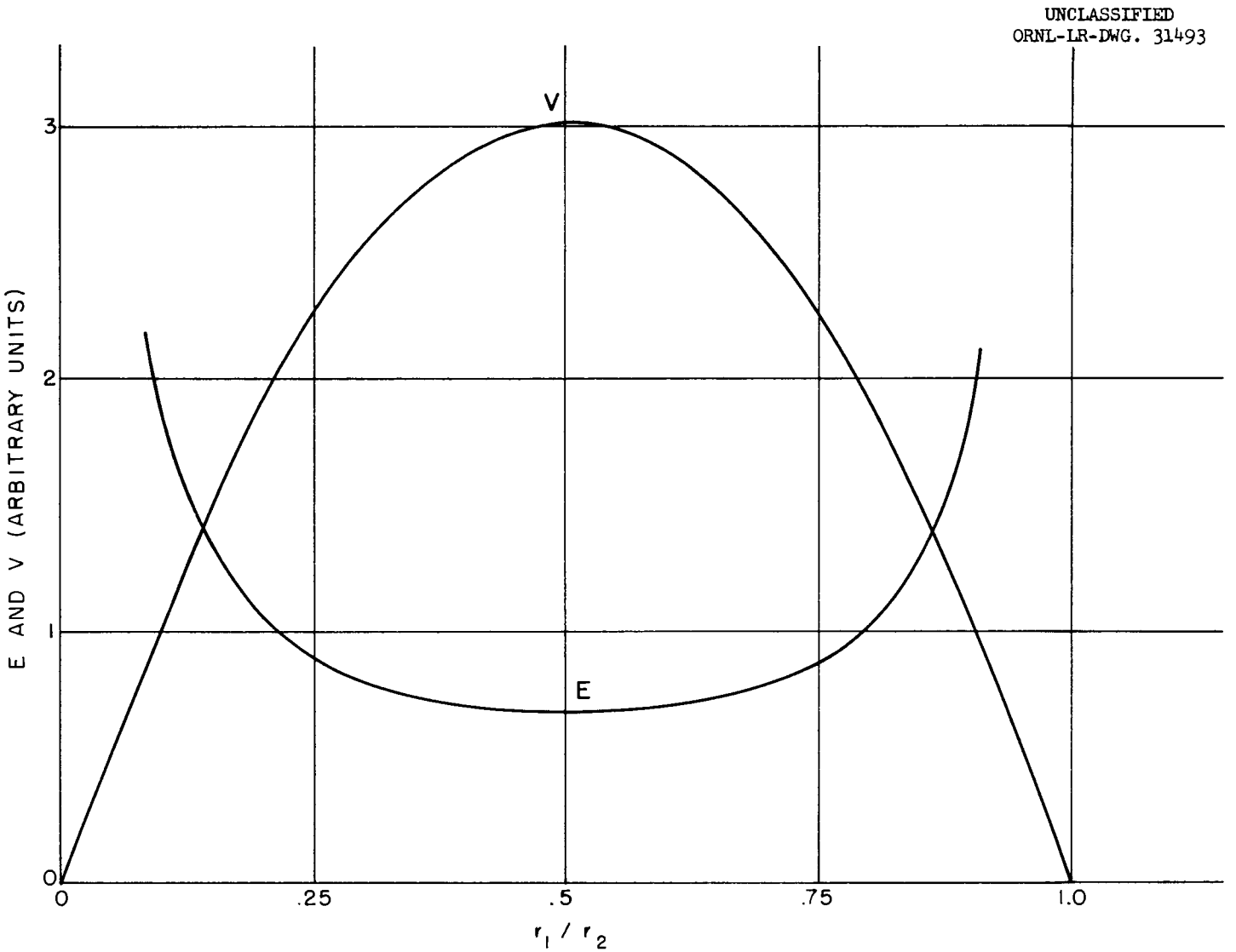


Figure 1. Effect of Ratio of Sphere Radii in a Pre-Accelerator.

## B. Effect of Acceleration on Particle Trajectories

The trajectory for a particle in combined electric and magnetic fields is described by a well-known set of coupled differential equations[12] which, unfortunately, are not soluble in the uniform magnetic, inverse square electric field situation present here. Some insight into the behavior of an electron of initial energy T and accelerated by an amount of energy $\Delta E$ may be gained by contrasting its trajectory with that of an electron of initial energy $T+\Delta E$ which receives no additional energy. The latter is the typical electron which would pass through the spectrometer and be counted when the magnetic field is adjusted to accommodate an energy $T+\Delta E$. When no fields are present, the trajectories are generators of a cone whose apex lies at the point source and whose half-apex angle is $\theta$, where $\theta$ is the take-off angle measured to the axis of the spectrometer. When a magnetic field is added, the particles move initially along a cone generator and tend to acquire a velocity and displacement normal to their original direction of motion and lying approximately in a plane tangent to the cone at that cone generator. This same plane will also contain the motion approximately when a radial (from the source point) electric field is introduced. The

---

[12] See for instance, K. R. Spangenberg, VACUUM TUBES, (McGraw-Hill, 1948) pp. 409-410.

coordinate system is illustrated in Figure 2 where the r direction is shown along the cone generator and the z direction is perpendicular to it.

The differential equation of the motion in the z direction is

$$m\ddot{z} = eB\,\dot{r}\,\sin\theta \tag{5}$$

which may be integrated immediately to yield

$$m\dot{z} = eB\,r\,\sin\theta + C \tag{6}$$

when $r = 0$, $\dot{z} = 0$ and thus $C = 0$ also. It should be noted that Equation (6) was obtained without specifying the temporal dependence of r. That is the lateral velocity acquired by an electron on traversing some distance r is independent of the acceleration the electron may have experienced. If B represents the magnetic field associated with spectrometer transmission of an energy $T+\Delta E$, then the lateral velocity associated with both the unaccelerated and accelerated electrons after they have reached the outer sphere $(r = r_2)$ is

$$\dot{z}(r_2) = \frac{eBr_2\sin\theta}{m} \quad . \tag{7}$$

UNCLASSIFIED
ORNL-LR-DWG. 31494

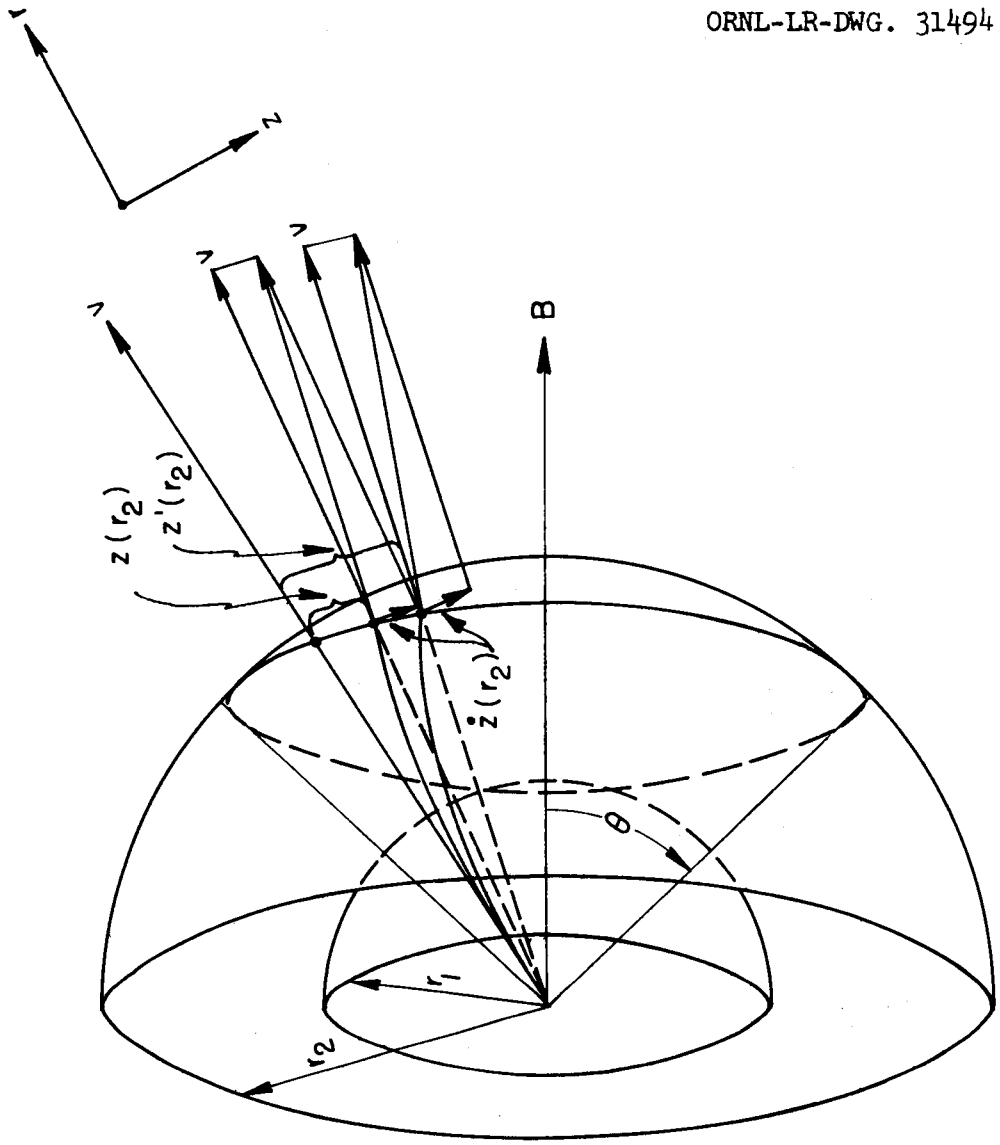


Figure 2. Coordinate System for Electron Trajectories.

When $r = r_2$, the lateral displacement of the unaccelerated electron of energy $T + \Delta E$ and constant velocity $v$ is easily found from Equation (7).

$$z(r_2) = \frac{eB\sin\theta}{m} \int_0^{t_2} r\, dt = \frac{eB\sin\theta}{m} \int_0^{t_2 = r_2/v} vt\,dt \tag{8}$$

$$z(r_2) = \frac{eB\sin\theta}{m} \frac{r_2^{\,2}}{2v} \tag{9}$$

The lateral displacement of the electron which leaves the source with energy $T$ and corresponding velocity $v_1$ and acquires an additional energy $\Delta E$ by the time it arrives at $r = r_2$ is

$$z'(r_2) = \frac{eB\sin\theta}{m} \left[ \int_0^{t_1} r\,dt + \int_{t_1}^{t_2} r\,dt \right]$$

$$= \frac{eB\sin\theta}{m} \left[ \int_0^{t_1 = r_1/v_1} v_1 t\,dt + \int_{r_1}^{r_2} \frac{r\,dr}{\dot{r}} \right]$$

$$= \frac{eB\sin\theta}{m} \left[ r_1^{\,2}/2v_1 + \int_{r_1}^{r_2} \frac{r\,dr}{\sqrt{\frac{2\Delta E}{m} \frac{(1/r_1 - 1/r)}{(1/r_1 - 1/r_2)} + v_1^{\,2}}} \right] \tag{10}$$

where the expression for $\dot{r}$ follows from the conservation of energy.

A convenient index of the variation in $z'(r_2)$ with the amount of energy acquired by acceleration compared to the initial energy at the source may be obtained from the ratio

$$\frac{z'(r_2)-z(r_2)}{z(r_2)} \equiv \frac{\Delta z}{z(r_2)} = (r_1/r_2)^2 \frac{v}{v_1} - 1$$

$$+ 2v/r_2^{\,2} \int_{r_1}^{r_2} \frac{rdr}{\sqrt{\frac{2\Delta E}{m} \frac{(1/r_1 - 1/r)}{(1/r_1 - 1/r_2)} + v_1^{\,2}}} \,. \tag{11}$$

In terms of energy, this becomes

$$\frac{\Delta z}{z(r_2)} = (r_1/r_2)^2 \sqrt{1+\Delta E/T} - 1$$

$$+ 2 \int_{(r_1/r_2)}^{1} \frac{(r/r_2) \;\; d \;\; (r/r_2)}{\sqrt{\frac{\Delta E/T}{1+\Delta E/T} \frac{(r_1/r_2)^{-1} - (r/r_2)^{-1}}{(r_1/r_2)^{-1} - 1} + \frac{1}{1+\Delta E/T}}} \tag{12}$$

and if $\mu \equiv r/r_2$ ; $\nu = r_1/r_2$

$$\frac{\Delta z}{z(r_2)} = \nu^2 \sqrt{1 + \Delta E/T} - 1$$

$$+ 2 \int_{\nu}^{1} \frac{\mu d\mu}{\sqrt{\frac{\Delta E/T}{1+\Delta E/T} \cdot \frac{1/\nu_1 - 1/\mu}{1/\nu_1 - 1} + \frac{1}{1 + \Delta E/T}}} \quad . \tag{13}$$

Although the integral in Equation (13) may be solved exactly, the result is rather involved algebraically, and a solution of accuracy comparable to the approximations made in obtaining $\Delta z/z(r_2)$ may be obtained more readily by numerical integration. The result for various values of $\nu$ is shown in Figure 3.

When $\Delta E/T = 0$, Equation (13) yields $\Delta z/z(r_2) = 0$. It is seen that the fractional change in lateral displacement increases as both $\Delta E/T$ and $\nu$ increases. Although neither the magnitude nor the sign of the focusing effect may be predicted from this analysis, the above may be useful in predicting under what conditions a marked change in trajectories and hence a focusing action may be anticipated. For example, in Figure 11 in Section V A, the focusing action for $\nu = 0.5$ (used in this research) is seen to be negligible when $\Delta E/T \simeq 0.1$ for which $\Delta z/z(r_2) \simeq 0.02$. However, when $\Delta E/T \simeq 1$ and thus $\Delta z/z(r_2) \simeq 0.2$ a definite focusing effect is noted (see Figure 15 in Section V D).

UNCLASSIFIED
ORNL-LR-DWG. 31495

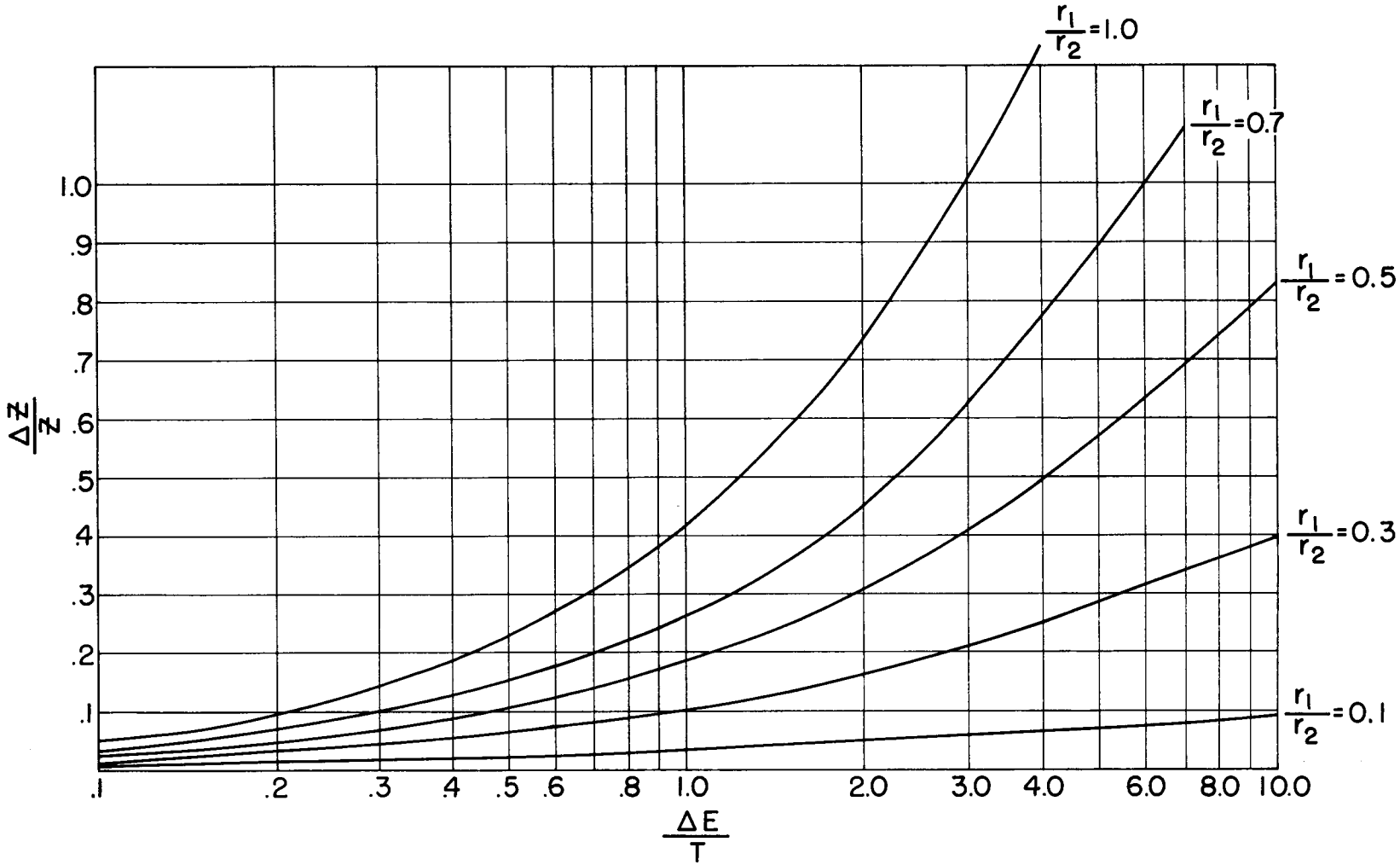


Figure 3. Fractional Increase in Lateral Displacement of Trajectories as a Function of Ratio of Added Energy to Energy at Source.

C. Correction of Counts with Acceleration to a Momentum Distribution

It is well known[13] that the count rate as a function of magnet current determined for a beta source with spectrometer with fixed geometry must be corrected by dividing each count rate by the momentum of the particles being counted. This procedure in effect allows a direct comparison of counts taken at different momenta inasmuch as all corrected counts now represent the number of events recorded which lie within equal increments of momentum. The count rate corrected in this fashion may be considered to be a true momentum distribution.

The correction to the count rate required when energy is added to the beta rays before they enter the spectrometer is not as simple or obvious as the above and has apparently been neglected by others who have used the pre-acceleration technique.

To correct to a constant momentum window when pre-acceleration is used, the following considerations must be taken into account. First of all

$$N_1(p)dp = N(T)dT \tag{14}$$

where p and T are corresponding momentum and energy in a beta spectrum.

[13] Siegbahn, K., BETA AND GAMMA SPECTROSCOPY, (Interscience Publishers, New York, North Holland Publishing Co., Amsterdam), 1955.

$N_1(p)$ and $N(T)$ are the number of events per unit momentum and per unit energy. Thus Equation (14) states effectively the conservation of beta rays; i.e., there are as many between p and p+dp as between T and T+dT. A corresponding equation can be written for the case where each electron is accelerated by the same constant amount $\Delta E$ so that it now has an energy $T' = T+\Delta E$ and an equivalent momentum p'. The new relationship between the momentum distribution $N_2(p')$ and energy distribution $N(T'-\Delta E)$ is

$$N_2(p')dp' = N(T'-\Delta E)dT' \tag{15}$$

where the same function N has been used to denote the energy distribution as before. This is in accordance with the idea that the addition of a constant energy $\Delta E$ to each electron from the source merely shifts the entire energy spectrum by an amount $\Delta E$ without altering its shape. Using this equivalence of $N(T)dT$ and $N(T'-\Delta E)dT'$ the following relationship may be written.

$$N_1(p)dp = N_2(p')dp' \tag{16}$$

or

$$N_1(p)dp = \left[ N_2(p') \frac{dp'}{dp} \right] dp \tag{17}$$

The conservation of energy may be written for relativistic electrons as

$$\sqrt{p^2c^2 + (m_oc^2)^2} - m_oc^2 + \Delta E = \sqrt{(p')^2c^2 + (m_oc^2)^2} - m_oc^2 \qquad (18)$$

The $m_oc^2$ may be dropped from both sides of the equation and then the equation may be squared.

$$(p')^2c^2 + (m_oc^2)^2 = p^2c^2 + (m_oc^2)^2 + 2\Delta E\sqrt{p^2c^2 + (m_oc^2)^2} + (\Delta E)^2 \qquad (19)$$

Next the equation is differentiated and the quantity $\frac{dp'}{dp}$ is obtained.

$$\frac{dp'}{dp} = \frac{p}{p'}\left[1 + \frac{\Delta E}{\sqrt{p^2c^2 + (m_oc^2)^2}}\right] \qquad (20)$$

The quantity $\frac{dp'}{dp}$ is then substituted into Equation (17) yielding

$$N_1(p) = N_2(p')\left(\frac{p}{p'}\right)\left[1 + \frac{\Delta E}{\sqrt{p^2c^2 + (m_oc^2)^2}}\right] \qquad (21)$$

which provides a prescription for converting the momentum distribution observed with an acceleration $\Delta E$ into the corresponding momentum distribution which would have been observed with no acceleration.

Here counter window absorption and focusing effects have been assumed to be absent or to have been corrected for in obtaining $N_2(p')$.

The physical significance of Equation (21) may be seen in part. The momentum distribution $N_2(p')$ is based on a momentum window which is determined by p' and is thus larger than the momentum window usually associated with the spectrometer which in the absence of acceleration is based on the true momentum at the source p. Thus $N_2(p')$ is too large and must be reduced to the standard momentum interval associated with momentum p. Hence $N_2(p')$ is multiplied by p/p'. The other factor is due to the relativistic relationship between energy and momentum and has no simple interpretation. That this factor arises from relativistic considerations may be seen if the above analysis is repeated using the non-relativistic relationship between energy and momentum to replace Equation (18). Thus

$$\frac{p^2}{2m} + \Delta E = \frac{(p')^2}{2m} \tag{22}$$

For this relationship $\frac{dp'}{dp}$ is found immediately to be

$$\frac{dp'}{dp} = \frac{p}{p'} \tag{23}$$

and the factor $\left[\quad\right]$ of Equation (21) is thus unity.

Equation (21) may be put in a form more suitable for calculation. For magnetic spectrometers containing no iron, the magnet current is proportional to the momentum being transmitted. Thus Equation (21) becomes

$$N_1(p) = \frac{c/m}{(I_{p'})^2} \; I_p \left[ 1 + \frac{\Delta E}{T + m_o c^2} \right] \tag{24}$$

That is, the observed counts per minute (c/m) is to be divided by the square of the magnet current at which the count is observed and is to be multiplied by the magnet current where this same group of beta rays from the source would have been observed in the absence of any pre-acceleration. The whole is to be multiplied by the quantity $\left[\quad\right]$ which is just unity plus the ratio of the added energy to the total (kinetic plus rest mass) energy at the source.

## D. The Effect of Acceleration Upon Count Rate

The primary purpose of pre-acceleration is to permit the counting of electrons whose energy is below the cut-off energy of the counter window. It has another effect, which can be advantageous, of effectively opening the momentum window at lower energies. This counteracts the shrinking of the window which is proportional to the momentum for fixed slit spectrometers. Thus the count rate normally approaches zero as the momentum of the electrons approaches zero.

To illustrate this effect, in Figure (4) a graph of count rate versus energy has been plotted with and without acceleration (30 K.V.) for an isotope with a linear Fermi plot ($Pm^{147}$ with an end point of 225 Kev).

The bottom line is a plot of the count rate one would observe if the spectrum were taken with a spectrometer in which the momentum window is proportional to the momentum. Since the Fermi line is a plot of $\sqrt{N(p)/f}$, squaring this and multiplying by f gives N(p). This, when multiplied by the momentum, gives the counts per minute which would be observed at that momentum.

The middle line is a graph of the count rate one would observe if the same spectrum were run with 30 K.V. pre-acceleration, assuming no focusing. This is calculated by multiplying the $N_1(p)$ of the preceding paragraph by $\frac{(p')^2}{p(1+\frac{\Delta E}{T+m_o c^2})}$ which is the inverse of the correction discussed in Section C.

The top line shows how the focusing further affects the count rate. The points used are experimental and represent the focusing with a ring source using a three millimeter source defining. The counter window transmission has been removed from the experimental points.

UNCLASSIFIED
ORNL-LR-DWG. 31496

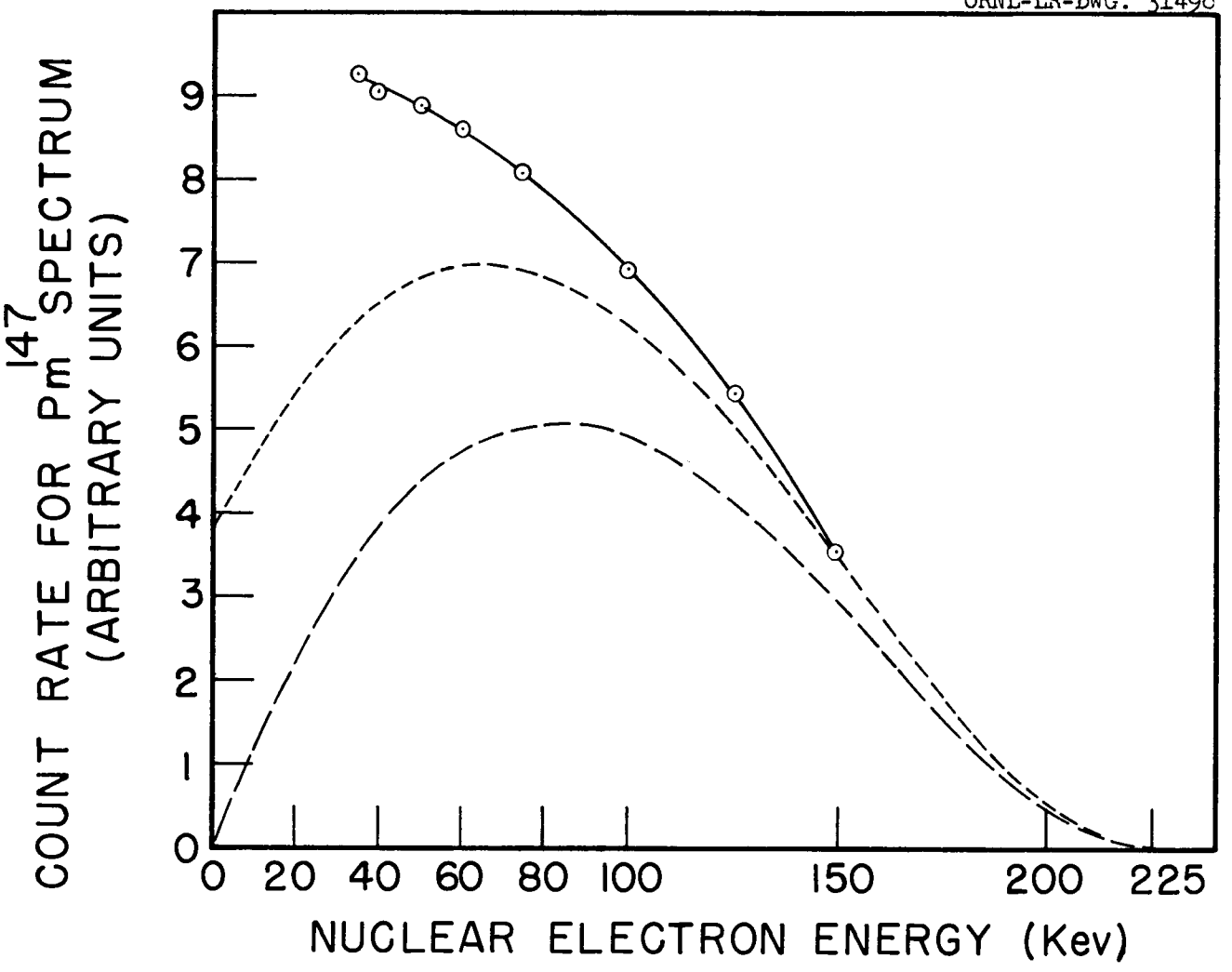


Figure 4. Variation of Count Rate with Energy at Source for Allowed Beta Spectrum and Fixed Pre-Acceleration Voltage.

## E. Effect of Acceleration on Resolution

### 1. Energy Resolution

Schneider, et. al.[6] have derived an equation which relates the energy resolution after acceleration to the momentum resolution inherent in the machine. The derivation will be repeated here for completeness.

The relativistic equation relating energy and momentum is

$$T = \sqrt{p^2c^2 + (m_oc^2)^2} - m_oc^2 \tag{25}$$

If one adds $m_oc^2$ to both sides of the equation and squares the result.

$$(T + m_oc^2)^2 = p^2c^2 + (m_oc^2)^2 \tag{26}$$

If an increment of energy $\Delta E$ is added to the electrons by means of a pre-accelerator,

$$(T + m_oc^2 + \Delta E)^2 = (p')^2c^2 + (m_oc^2)^2 \tag{27}$$

where p' is the momentum after acceleration. Now p' is proportional to ($I_{p'}$) the magnet current for which the magnet transmits electrons of momentum p'.

Let the constant of proportionality be "a". Thus

$$(T + m_o c^2 + \Delta E)^2 = a^2 (I_{p'})^2 c^2 + (m_o c^2)^2 \tag{28}$$

This expression may be differentiated to yield

$$2(T + m_o c^2 + \Delta E)\, dT = 2a^2 I_{p'}\, c^2\, dI_{p'} \tag{29}$$

This equation may be solved for dT.

$$dT = \frac{a^2 I_{p'} c^2 dI_{p'}}{(T + m_o c^2 + \Delta E)} \tag{30}$$

To compute the energy resolution in terms of the momentum resolution divide both sides by T and multiply the right side by $\frac{I_{p'}}{I_{p'}}$ .

$$\frac{dT}{T} = \frac{a^2 (I_{p'})^2 c^2}{(T + m_o c^2 + \Delta E) \cdot T} \quad \frac{dI_{p'}}{I_{p'}} \tag{31}$$

Substituting the value of $(I_{p'})^2$ from Equation (28) gives

$$\frac{dT}{T} = \frac{(T + m_o c^2 + \Delta E)^2 - (m_o c^2)^2}{(T + m_o c^2 + \Delta E) \cdot T} \quad \frac{dI_{p'}}{I_{p'}} \tag{32}$$

This gives the energy resolution of the spectrometer after the electrons have been accelerated by an energy of $\Delta E$, where the inherent momentum resolution of the spectrometer is $(dI_{p'}/I_{p'})$ .

2. Momentum Resolution

Because most beta spectra are plotted against momentum the momentum resolution which can be expected from different combinations of acceleration and initial energy is important. That is, for a spectrometer of momentum resolution R and electrons of initial kinetic energy (T), what resolution $R_{(acc)}$ should be expected if an energy increment $\Delta E$ is added with the accelerator.

From Equation (20) the quantity $\frac{dp'}{dp}$ is given by

$$\frac{dp'}{dp} = \frac{p}{p'} \left[ 1 + \frac{\Delta E}{T+m_o c^2} \right] \tag{32}$$

This equation may be solved for $\frac{dp}{p}$

$$\frac{dp}{p} = \frac{(p')^2}{p^2 \left[ 1 + \frac{\Delta E}{T+m_o c^2} \right]} \frac{dp'}{p'} \tag{33}$$

or since $\frac{dp'}{p'}$ is the inherent resolution of the spectrometer (R) and $R_{(acc)}$ is the resolution after acceleration we can write the equation as

$$R_{(acc)} = R \frac{(p')^2}{p^2 \left(1 + \frac{\Delta E}{T+m_o c^2}\right)} \tag{34}$$

or since p is proportional to I

$$R_{(acc)} = R \frac{(I_{p'})^2}{I_p^{\,2}\left(1 + \frac{\Delta E}{T+m_o c^2}\right)} \tag{35}$$

The ratio of $\frac{R_{(acc)}}{R}$ has been plotted for values of 10, 20 and 30 K.V. acceleration in Figure 5. The correction given multiplied by the inherent momentum resolution of the spectrometer gives the resolution that can be expected with a given initial and added electron energy. This electron energy before acceleration is designated the nuclear electron energy.

It is apparent that resoluation can be improved by applying a decelerating voltage. This principle has been used recently in studies of electron collision cross sections in metals by Blackstock, Birkhoff and Slater.[14]

[14] Blackstock, A. W., Birkhoff, R. D., and Slater, M., Phys. Rev. 95, 303 (1954); Rev. Sci. Inst. 26, 274 (1955).

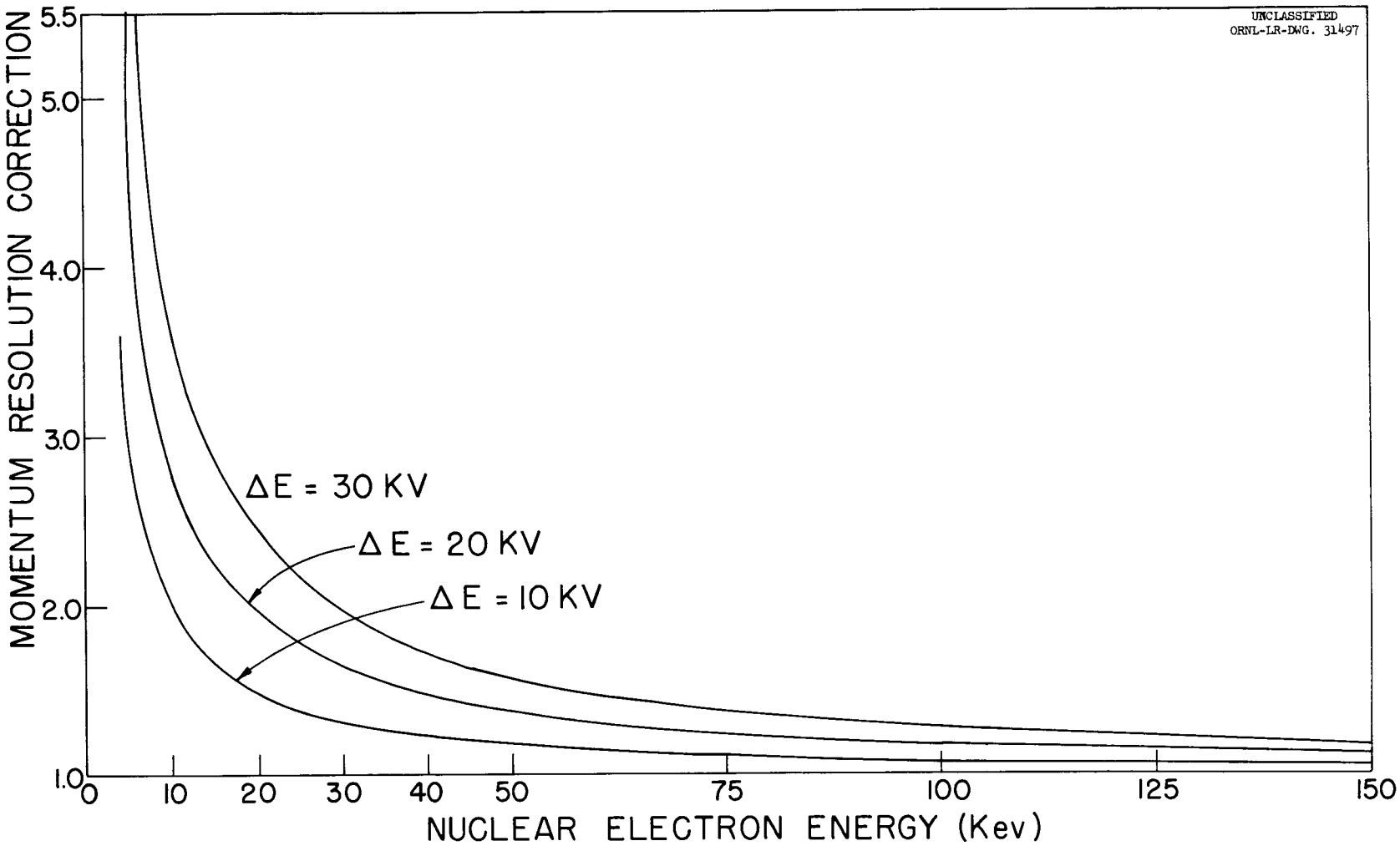


Figure 5. Effect of Pre-Acceleration on Momentum Resolution.

# IV. APPARATUS AND TECHNIQUES

## A. The Spectrometer

The spectrometer is of the homogenous field solenoidal type, and has been described previously.[15] It is designed to have a resolution of .25% and a transmission of about the same magnitude. The solenoid consists of 639 turns of 1/2" copper tubing wound in three layers about a cylindrical brass tank ten feet long and twenty-eight inches in diameter. Interwound with the rubing are an equal number of turns of number 12 magnet wire which is used to make rapid corrections in the magnetic field. Near each end of the solenoid are coils of twenty-eight turns each which add to the magnetic field of the solenoid so that it is uniform within .25% within the region of the electron trajectories.

The solenoid is parallel to the horizontal component of the earth's magnetic field. Two coils of copper magnet wire of 21 turns carrying 2.1 amps each are wound on horizontal wooden frames about the solenoid to correct for the vertical component.

Four access ports each four inches in diameter are located radially about the spectrometer at each end. The 3/4 occulting cylinder control rod and the source rod pass through identical ports located on the axis on each end of the spectrometer. The occulter is used when the slit and source are being positioned for optimum resolution and transmission. The adjustment is made by means of a system of adjustment rods which use three of the radial ports mentioned above at the source end of the spectrometer.

---

[15] Birkhoff, R. D., Smith, A. W., Hubbell, H. H. Jr., and Cheka, J. S., Rev. Sci. Inst. 26, No. 10, 959 (1955).

The spectrometer has two annular selection slits. The first of these selects electrons whose trajectories make an angle of $45^\circ \pm 1.6^\circ$ with the spectrometer axis. The second slit, which is at the ring focus, selects electrons that have passed the first and have momenta within a narrow range. The electrons then enter the Geiger counter detector through an annular conical aperture. The counter is discussed in Section IV B.

The spectrometer controls including the vacuum system controls and meters are located in a single console. Two remote-controlled motors drive the Rubicon type B potentiometer which regulates the magnet current. A Nuclear model 162 scaler and a register accumulate a given number of counts the time for which is stamped by a Streeter-Amet printing timer.

The spectrometer is evacuated by two Distillation Products Company model MC-275 diffusion pumps in series with two Welsh Duo-Seal number 1397 fore pumps.

The spectrometer was calibrated for this work using the $Au^{198}$ K-conversion line. Correction was made for the horizontal component of the earth's magnetic field which was coaxial to the magnet. A reverse current was passed through the magnet coil until the earth's field was neutralized as measured with a flip coil and this value of current was recorded. In all subsequent work, the magnet was assumed

30

to have a "built in" current equal to this value and adding to the current from the motor generator set. The spectrometer alignment was checking using the 3/4 occulting cylinder previously mentioned.

## B. The Geiger Counter

The counter used in this work was of the cylindrical side window type and is shown in Figure 6. The cylindrical wall served as the cathode and was composed of a plastic film with a metal coating to render it conducting. The wall was formed by cementing the plastic film to two sections of brass tubing which formed the ends of the cylinder. The film was glued along the seam to make the assembly gas tight. The dimensions of the completed counter were about 1/4" in diameter and about two and a half inches in length. Small diameter stainless tubing ran to each end of the counter making possible continuous gas flow. An additional function of the tubing was to provide support to the outer end of the counter tube. Kovar seals closed the ends of the counter tube and carried the .003 inch tungsten center electrode.

The counter and connecting tubes were inserted into an aluminum mounting cylinder which was placed within the female cone section of the counter shield. The counter tube extended across the opening between the male and female cones along the spectrometer axis.

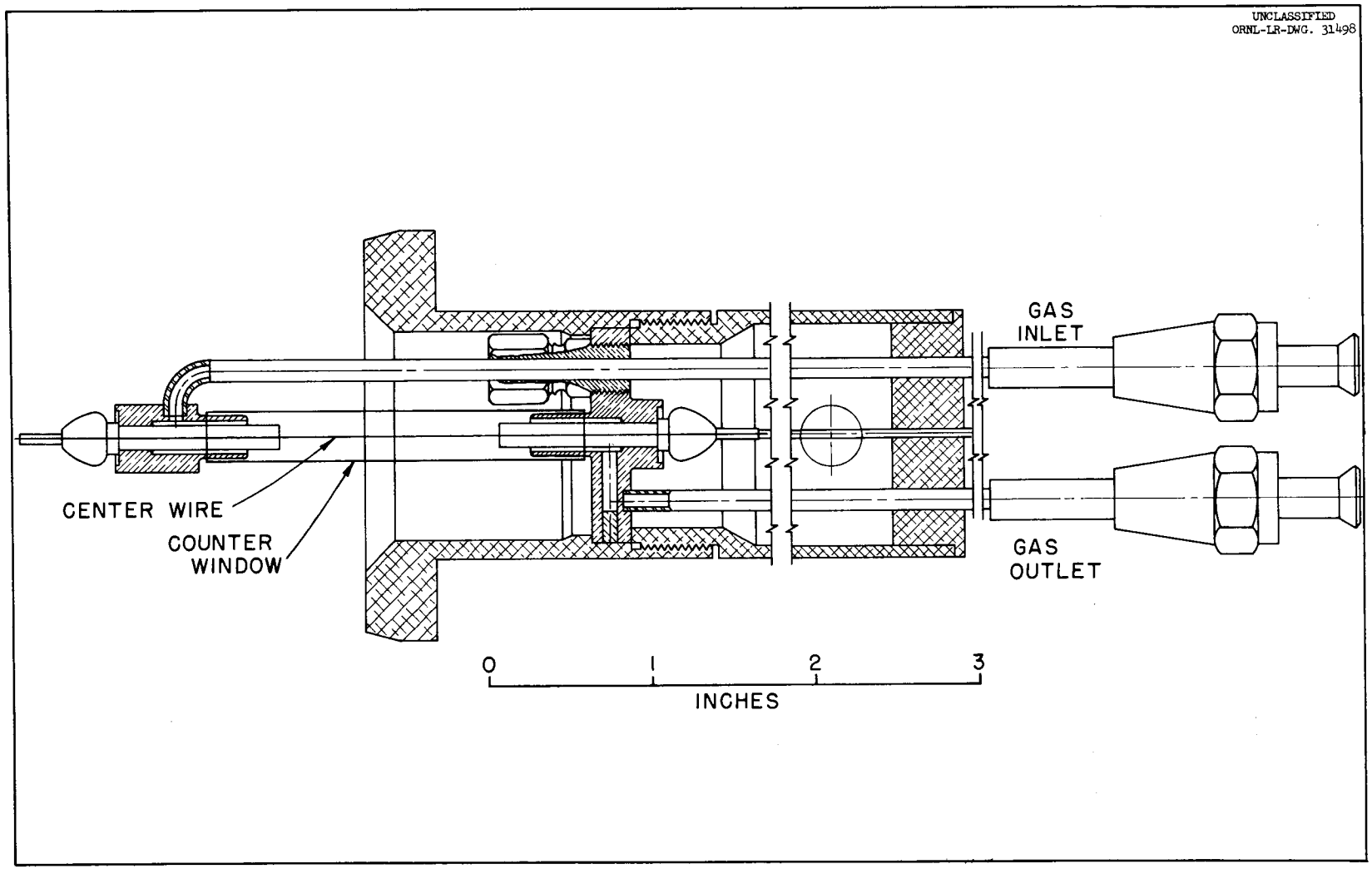


Figure 6. Cross Sectional View of Geiger Counter.

The wall thickness in the counters already in use with the spectrometer was about 1 $mg/cm^2$ of aluminum-coated mylar*, and had a cut-off energy in the neighborhood of twenty-five kilovolts with detectable attenuation up to about one hundred kev.

It was hoped that this wall could be made thin enough so that the counter could be used at about thirty kilovolts without excessive correction.

In order to obtain a thinner wall counter wall material was made of formvar according to the procedures given by Siegbahn.[16] Experimentation with solutions of various strengths yielded a mixture that gave satisfactory results. Four grams of formvar were dissolved in a hundred milliliters of 1,2 dichloroethane. A clean lantern slide glass of about 3 x 4 inch dimensions was dipped into this solution, removed slowly, and allowed to dry. This was then repeated to give one additional layer. The film thus formed was removed from the glass slide by floating it off the glass in a container of water. On one surface of the film 25-50 μg of gold was vacuum evaporated to make the surface conducting. The sheets thus formed were cut to the proper size for a counter window with each sheet usually making three windows.

---

* Available commercially from Radiation Counter Laboratories.

[16] Siegbahn, K., op. cit.

The requirements for an adhesive for these windows were difficult to satisfy. It had to form a fairly solid joint since any stretch in a particular place would cause an increase in the diameter of the tube at that point which would further increase the stress at that point. Also, the adhesive had to be suspended in a solvent which would not dissolve or weaken the formvar. Pliobond had been used with the mylar windows previously and when baked at a hundred degrees centigrade, gave a good strong seal. The same technique was again tried with formvar, and it was found that while Pliobond would close the tube satisfactorily, the formvar would disintegrate if heated as before. The heat had to be very carefully adjusted so that the Pliobond could be dried while the formvar was undamaged. In practice a 250 watt heat lamp was used at a distance of 18-24 inches from the tube for a period of 24-48 hours. The tube was rotated from time to time so that all the seams could be dried. By using a lamp most of the heat was absorbed in the seams because of their greater optical absorption.

The mylar counters were operated between 650 and 800 volts depending upon the pressure of the counter gas. Geiger gas (Tracerlab) was kept at a pressure of about 40 centimeters by a cartesian manostat. This pressure gave a margin of safety against explosion, a usable plateau and eliminated many spurious counts which may result at lower pressures from a dirty or irregular center electrode.

With the formvar window, however, a pressure of forty cm was excessive because of the smaller thickness of about 0.5 $mg/cm^2$. If considerable care were exercized in construction of the counters it was found that they could be operated in the pressure range of 25-30 cm of Hg with good results. The plateau was from 20-30 volts long as compared to the 40 plus volts length at 40 cm of pressure.

The counter was operated by adjusting the voltage to give a constant pulse height. This method has been used by Rathbun and Jensen[17] and is more satisfactory than attempting to maintain a constant voltage when using a counter with such a short plateau. Once the counter was "warmed up" it normally would operate for several hours without adjustment when the count rate was below about 1000 c/min. Above this rate there was a tendency to drift which made more frequent corrections necessary.

The formvar counter showed some lack of durability. A well-made counter lasted from 40 to 70 hours. It then became somewhat brittle and was not usable due to leaks. The counter had a distinct advantage, however, at low count rates due to its low background of two to five counts per minute. It also had a geometry suited to this type of spectrometer.

---

[17] Rathbun, E. R., Jr., and Jensen, E. N., Geiger Müller Counters for Low-Energy Work; I. S. C. - 254; (August, 1950).

C. The Counter Monitor

Due to the long period of time that the spectrometer operates unattended on automatic control and due to the somewhat unusual design of the counter, it was felt that some method should be devised to monitor the counting efficiency of the system. The efficiency was known to be affected by a change in counter pressure or high voltage, and irregularities could be attributed to scaler or register troubles or timer malfunction as well.

It was felt that counting a standard source as a regular part of the automatic cycle would keep check on the counter operating efficiency and thus would be useful for correcting the data to a standard efficiency in case of small changes or serve as a rejection criterion in case of larger discrepancies.

A regular position in the automatic cycle had previously been allotted to counting the background which, however, was negligible compared to the spectrum being measured in most cases. Thus this part of the cycle was not routinely used and could be omitted in favor of a count on a standard source.

The general geometry of the monitor was determined by the space available and is shown in Figure 7. A fixed source with a movable shutter was used since this gives a completely reproducible geometry. The entire assembly was mounted on a cylindrical section that was strapped to the male counter shield cone. Two coaxial air

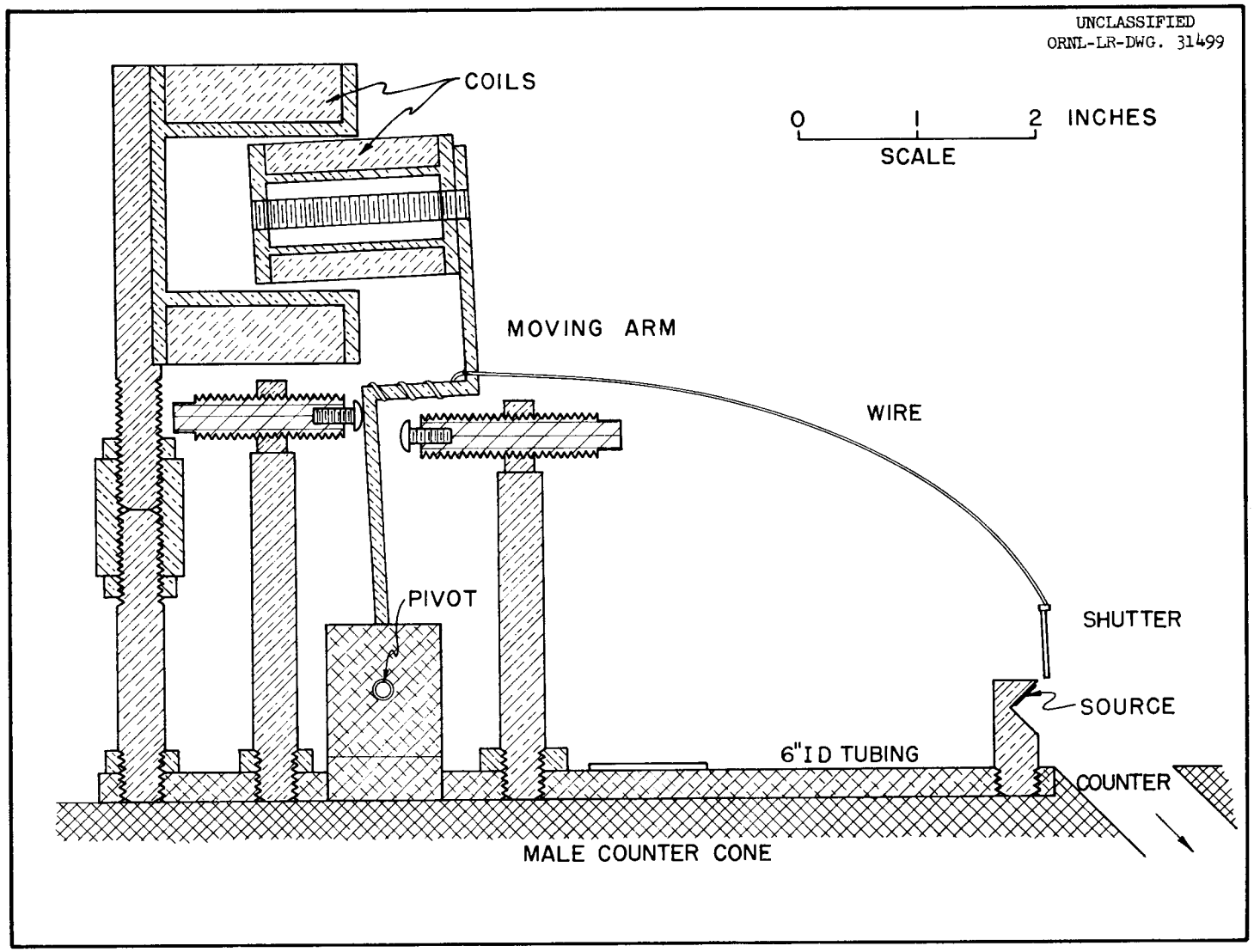


Figure 7. Cross Sectional View of Counter Monitor.

core solenoidal coils were used with one fixed and the other which carried the aluminum shutter moving within the first. The entire assembly was constructed of non-magnetic materials. Furthermore, the coil currents were zero when counting was taking place, thus eliminating any distortion to the magnetic field of the spectrometer. The small current which lighted the indicator lights was found to cause no change in count rate when switched on and off at the lowest energy used here (30 kev). It could, of course, be turned off if necessary.

The ultimate size and method of construction of the coils were determined by experimenting with various small coils available in the laboratory. Each coil was constructed of number twenty-eight varnished magnetic wire wound on a brass spool which had been wrapped with electrical tape to provide insulation between wire and spool. The winding was performed by turning the coils on a lathe made from two coaxial 100 rpm motors. The coils have resistance of about thirty and seventy-five ohms indicating that there are roughtly 450 and 1150 feet of wire respectively in each. The moving coil is mounted on a brass lever arm in such a manner that as it tips from one position to the other it passes through a position of unstable equilibrium. The arm comes to rest at either end against stops that serve also as contacts for coil-position indicator lights.

The operating cycle proceeds in the following manner. The triple pole single throw switch in Figure 8 is normally closed. When the machine has counted the spectrum at five different magnetic currents, the programmer motor is again started. A switch closes which actuates a relay which in turn closes the triple pole double throw switch. This causes current to flow in the coils in such a direction that the coils attract each other, thus exposing the source. The switch is then opened allowing the triple pole, double throw switch to return to its normally closed position. When the proper number of counts has been recorded, the programmer motor advances, closing a switch which allows current to flow through the coils in such a direction that the coils repel each other and thus close the shutter. Then the switch opens and the spectrometer advances in its regular operating cycle. A three-position spring loaded switch provides a means of operating the shutter manually.

The source is composed of $Pu^{239}$ vacuum evaporated onto a foil. The foil was glued to the notched square mount with glyptal and was sprayed with krylon to keep any activity from escaping. The krylon coating is estimated at .4 milligrams per square centimeter from tests on larger foils.

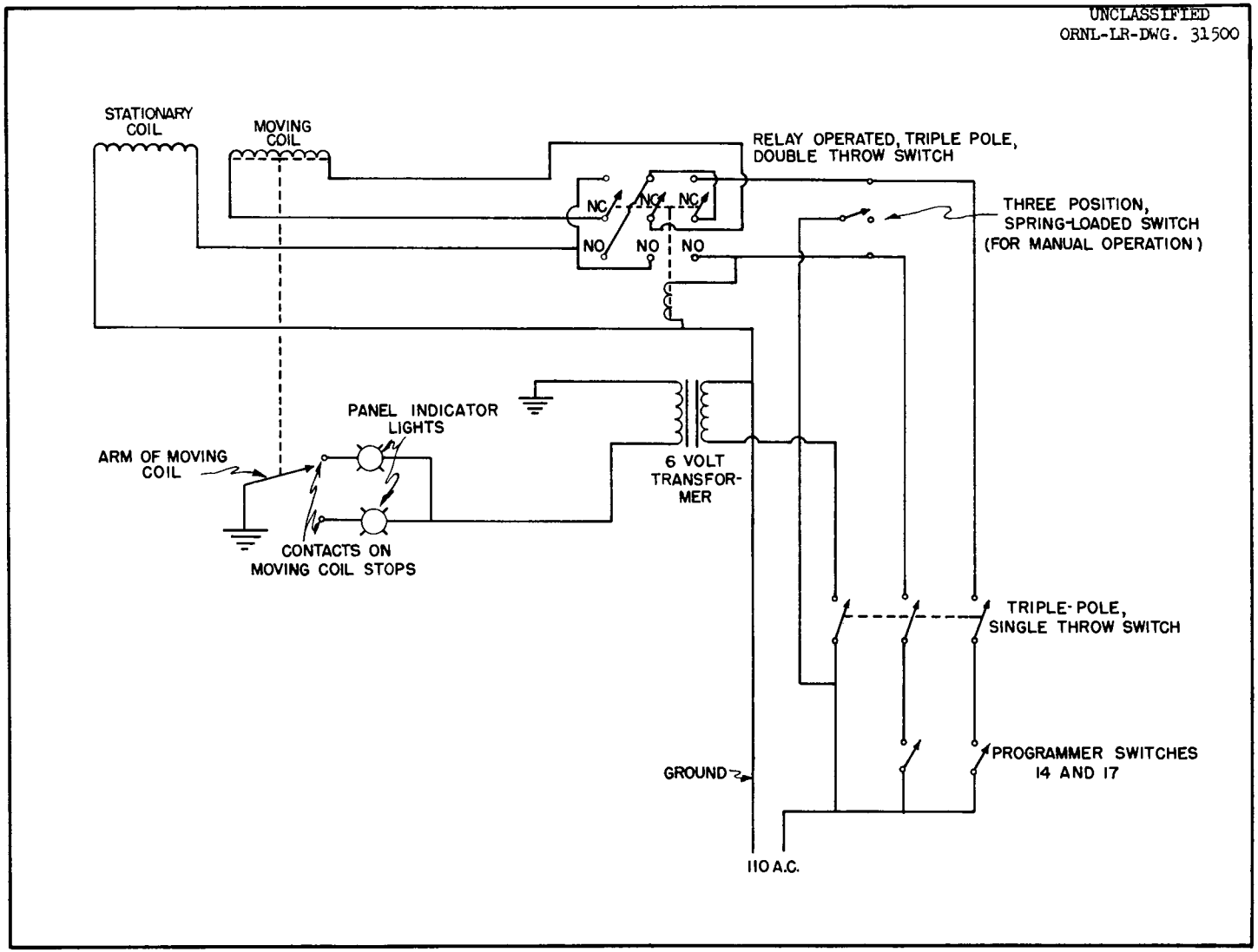


Figure 8. Schematic of Counter Monitor Circuit.

D. Construction of the Pre-Accelerator

The accelerator was designed in accordance with several difference requirements and is shown in Figure 9. Since it was eventually to be used with the phosphorus-bakelite cavity source it had to be large enough to accommodate a solid cylindrical source roughly 5/8 inch in diameter and 5/8 inch long. Then it had to have a sufficient gap so that thirty thousand volts potential difference could be applied without spark discharge taking place. It should be constructed such that the source position could be set quite accurately with respect to the slits.

The spherical symmetry of the accelerator was estimated as being least likely to cause distortion of spectra.

The spheres were turned of aluminum with the inner sphere .8 inches in radius and the outer sphere 1.6 inches in radius. The slits of the inner sphere were 1/16 inch across while those in the outer hemisphere were 1/8 inch across. The inner sphere was designed so that either solid sources, point (disk) sources or ring sources could be used.

The two spheres were separated by teflon spacers which were slightly recessed into the supporting plates to provide for exact alignment. The inner sphere was aligned accurately by turning into a threaded projection on the teflon base plate. This plate was

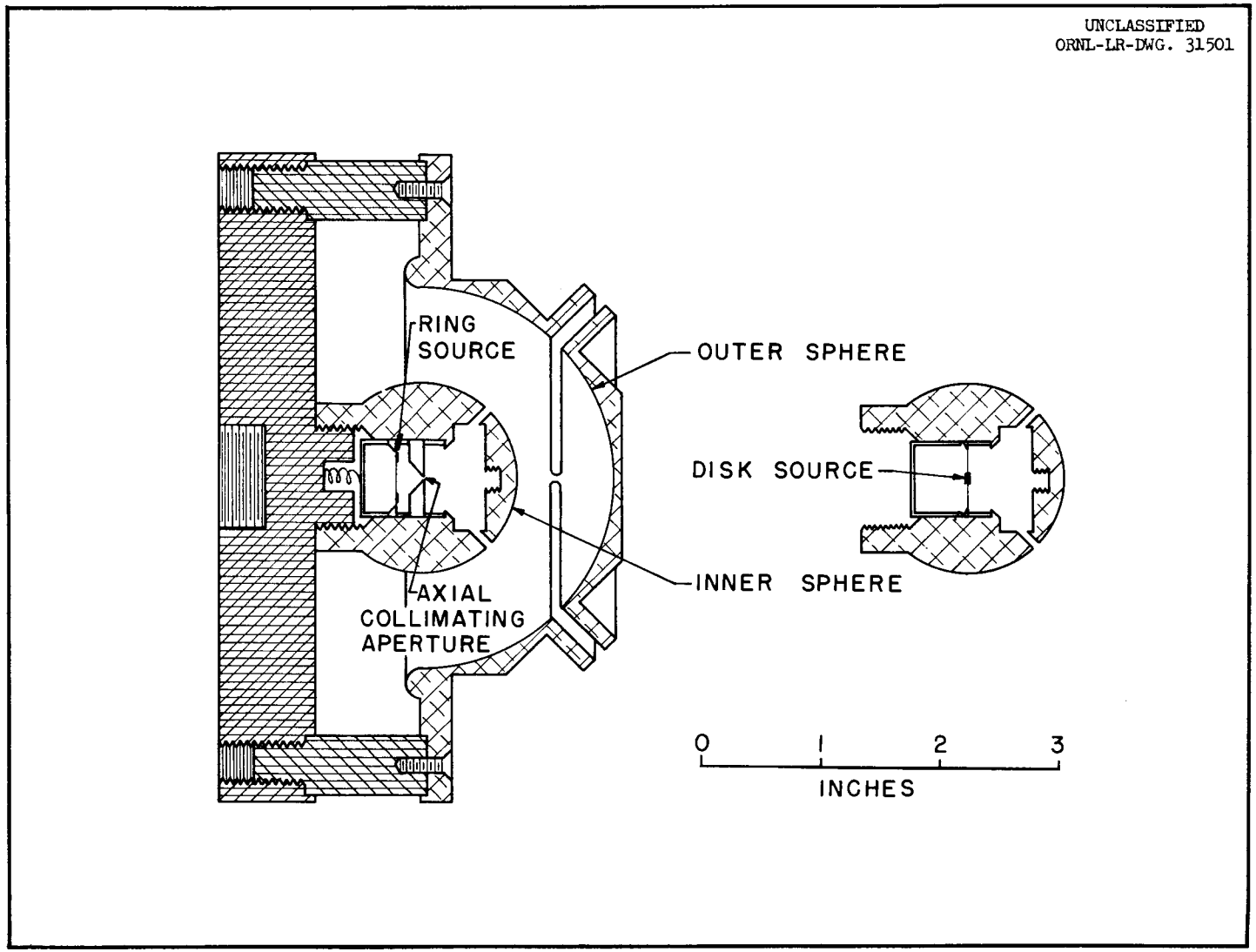


Figure 9. Cross Sectional View of the Pre-Accelerator.

fastened to a new, shortened source rod by turning the source rod into a hole countersunk in the back of the plate. The source rod was positioned along the spectrometer axis by turning it through a threaded collar one and one-half turns back from its most forward position. Centering the source holder on the axis was accomplished using the 3/4 cylinder and the conversion line of gold.

## E. The High Voltage Supply

A "Beta" model 602 high voltage d.c. power supply was used as shown in Figure 10. This was fed into a double L section filter consisting of two .25 μg 50 K.V. capacitors and two one-meg resistors. The high voltage was measured and monitored at the filter output by a Rubicon number 2732 potentiometer which measured the potential drop across a 1504 ohm wire wound resistor in series with a string of thirteen 2.5 megohm Shallcross "Akra-ohm" wire wound resistors. The voltage was very stable after a few minutes warm-up for the resistors in the power supply.

A sixty megohm protective resistance was used to limit the power supply current to 0.5 ma. A microammeter was installed in series with this resistor, but no currents could be detected indicating that there was no significant leakage current in the accelerator unit or cables.

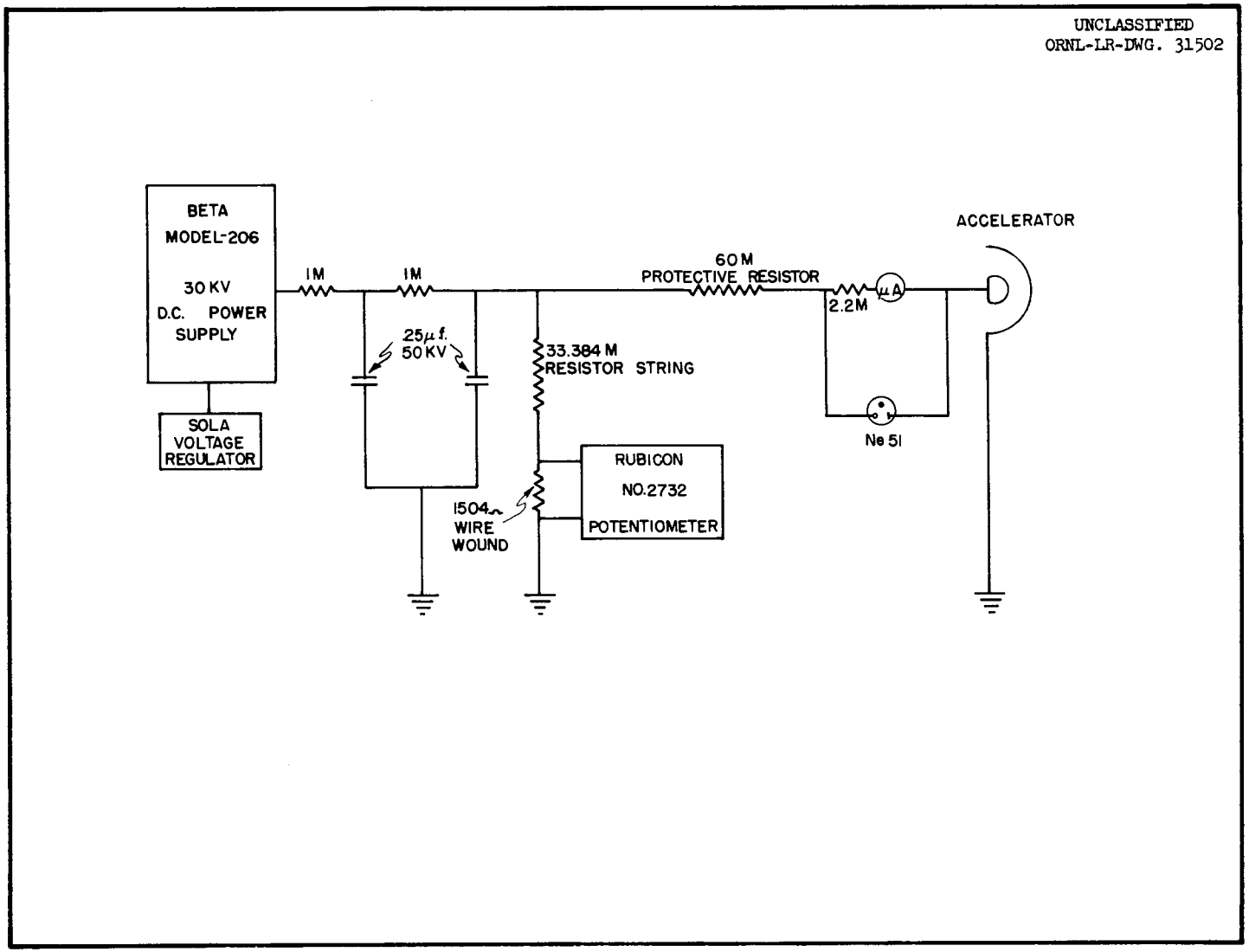


Figure 10. Schematic of the High Voltage Supply.

A 35 Kv Kerite type SW3-X cable carried the potential to the accelerator. RG-11/U cable was used for a time, but it broke down after usage for several weeks at thirty kilovolts. A section is still being used inside of the spectrometer, however, and has caused no trouble. The high voltage entered the spectrometer through a one-inch lucite rod insulator, the center of which carried a 5/16" brass conductor. The rod was inserted through the O-rings which formerly sealed the long source rod. The inner cable was attached by means of banana plug which was inserted into the end of the rounded rod for easy removal. The cable went to the accelerator spheres where a 2/3 loop spring of silver solder clipped onto the neck of the accelerator inner sphere. The outer sphere and the cable shield were grounded to the spectrometer chamber. The whole assembly is illustrated in Figure 11.

## F. Preparation of a Thin Source of $Pm^{147}$

A thin source of $Pm^{147}$ was required in order to evaluate counter window transmission. It was necessary that the Fermi plot be linear down to 30 kev at least where a transmission correction of about 20% was expected. It was felt that any larger correction would be so energy dependent as to prove unreliable.

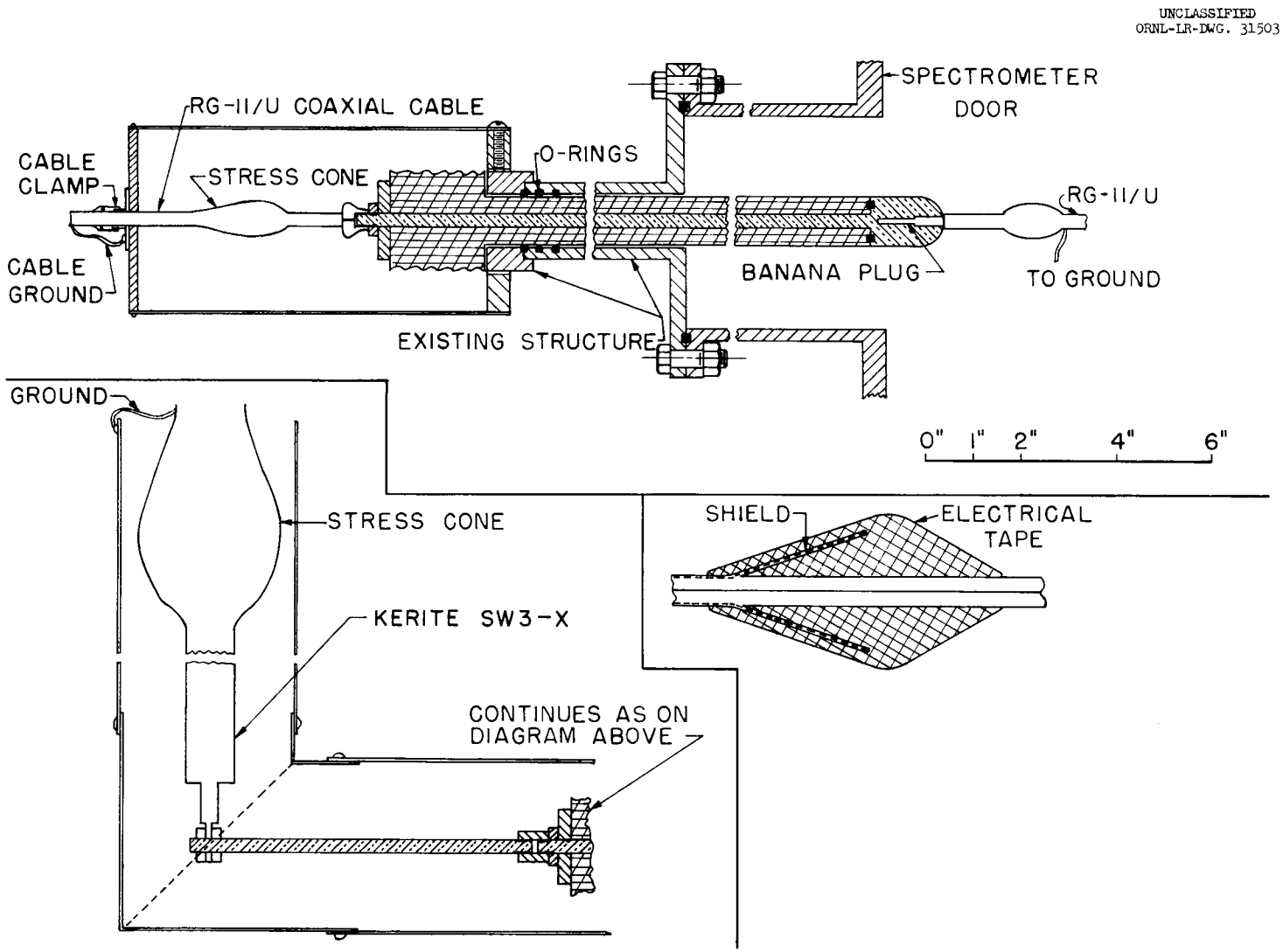


**Figure 11. Cross Sectional View of High Voltage Leads.**

The source backings were made of about 10 μg formvar film with a 10 μg layer of Al vacuum evaporated on to make them conducting. Breaking and distortion of the films due to heat while the evaporation process was taking place was eliminated by placing small disks of aluminum in contact with the back side of the film. In case of the thicker sources, backings of formvar-copper and formvar-gold were also used. The thin source backing was prepared for deposition of radioactivity by putting a drop of insulin on the area to be covered and then removing it. Then a drop of the solution of $Pm^{147}$ about .03 N with HCl was placed on the area and dried rapidly with an infra-red lamp with gentle rocking. This method is essentially the same as that employed by Langer, Motz and Price.[18] Their results with the same technique indicate that a source of less than 43 μg would produce no distortion in the energy range in which we were interested. The thin source used had an average surface density of less than 20 micrograms per square centimeter of solids from the solution. This density was increased somewhat by reaction of the HCl in the solution with the aluminum. If all of the HCl in the sample reacted, the source would have an average thickness of about 43 micrograms.

---

[18] Langer, L. M., Motz, J. W., and Price, H. C., Phys. Rev. 77, 798 (1950).

In order to increase the count rate at low energy, the source was made larger in diameter than specified for highest resolution. The source used was about 5 mm in diameter compared to the size for best resolution of .6 mm.

An attempt was made to produce a source by electroplating the promethium from a solution of ethylenediamine onto a gold surface which had been previously vacuum-evaporated onto a polystyrene-formvar sandwich prepared as described by Blanchard, Kahn and Birkhoff.[19] Electroplating of promethium onto solid wire has been described by Gates and Edwards.[20] In our case, however, the solvent attacked the film excessively so this method was abandoned. Sources were also prepared by precipitating with ammonia, but these appeared to be much thicker than the evaporated sources and were not used.

---

[19] Blanchard, R. L., Kahn, B., and Birkhoff, R. D., "The Preparation of Thin, Uniform Sources for a Beta-Ray Spectrometer", ORNL-2419, 1957.

[20] Gates, J. G., and Edwards, D. F., Nucleonics 13, No. 12, 57 (1955).

# V. EXPERIMENTAL RESULTS

## A. Testing the Pre-Accelerator at High Energies

As a first check on the accelerator, the K internal conversion line of $Au^{198}$ was accelerated with various voltages. The voltages used were known only approximately from the dial on the high voltage supply but were later corrected by calibration of the supply using the resistor string as indicated in the section on accelerator construction. The K-peaks with different accelerations are shown in Figure 12. These were obtained from a ring source of one millimeter radial width using a 1.4 millimeter diameter aperture at the virtual source position. The momentum resolution is about .30%. The resolution as a function of diameter of aperture has been tested experimentally by Blanchard, Kahn and Birkhoff[21] who showed that it could be improved by making this aperture smaller at the expense of transmission.

A graph of the shift of the K-peak versus the accelerating voltage applied is shown in Figure 13. The small inaccuracies can easily be accounted for by errors in reading the acceleration voltage scale and in extrapolation of the peak edges to obtain the peak energy.

---

[21] Blanchard, R. L., Kahn, B., and Birkhoff, R. D., op. cit.

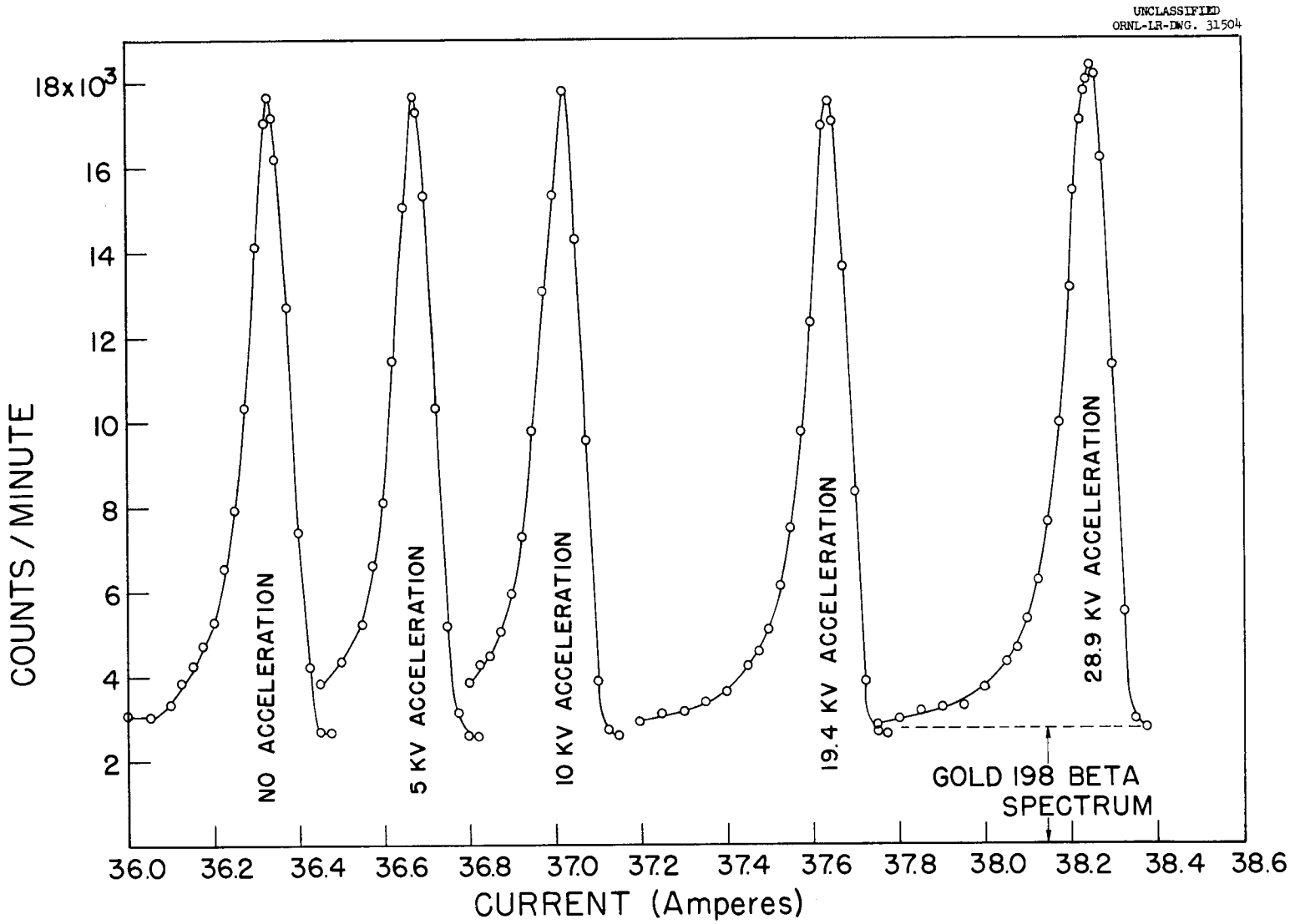


Figure 12. Gold$^{198}$ K-Conversion Peak with Various Accelerating Voltages.

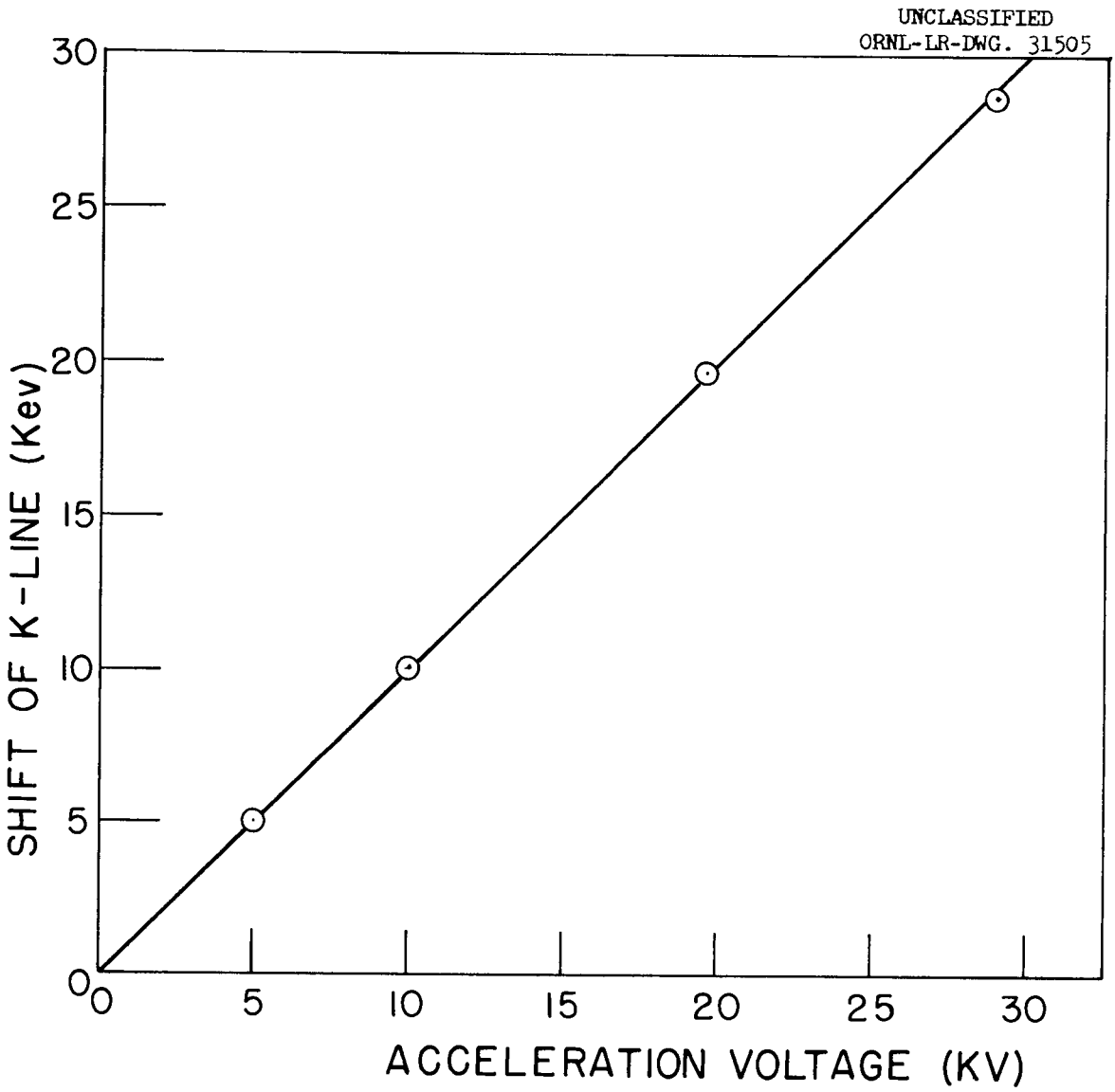


Figure 13. Shift in Apparent Energy of Conversion Peak with Acceleration Voltage.

B. The Zero Energy Peak

In the examination of spectra using accelerations of fifteen kilovolts and above, a peak was noticed at the current setting equivalent to the accelerator voltage (zero energy at the source). This peak did not disappear when the source was removed and appears to be the pre-acceleration equivalent of the high count rates encountered in post-acceleration while using accelerating voltages above the counter window cut-off energy. This phenomenon, probably identifiable as high-field emission, has been studied by Eyring, Mackeown and Millikan[22] and Trump and Van de Graaff.[23] It does not appear, however, that any quantitative statements can be made about this phenomenon from the pre-acceleration experiments described in this report.

The peaks were observed with acceleration voltages of fifteen kilovolts (presumably the cut-off energy) and greater. At 25-30 kilovolts and above the count rate became so high (20,000 counts/min or more) that coincidence losses became excessive. The 25-30 kilovolt figure spread is quoted because the count rate varied greatly depending upon the cleanliness of the spheres. The thirty kilovolt figure applied after the spheres had been cleaned in a solvent such as acetone, and inserted in the spectrometer with rubber gloves. The 25 kilovolt figure corresponds to insertion of the spheres with no special care taken.

---

[22] Eyring, C. F., Mackeown, S. S., and Millikan, R. A., Phys. Rev. 31, 900, (1928).

[23] Trump, J. G., and Van de Graaff, R. J., Phys. Rev. 75, 44 (1949).

By filling the slots with "apiezon" wax, whereupon a decreased count rate was noted, it was determined that the edges of the inner sphere were causing some of the count. The spheres had been polished on the spherical surfaces, but showed some markings in the slots. Further polishing in the slots reduced the count rate by a factor of about fifteen (to approximately the count rate with the inner slots plugged).

The zero energy peaks showed a momentum resolution of about .35%, which seemed reasonable in view of the relatively large "source" area which could contribute field emission electrons.

It does not appear possible to eliminate the zero energy peak completely. It does serve one useful purpose, however, which is to give a good check on the accuracy with which the spheres were placed in the spectrometer. That is, any shift in the spheres showed up as a shift in the magnet current at which the line appeared for a given high voltage.

## C. Counter Window Transmission

Previous work on the transmission of electrons by thin films has been reported by a number of investigators. Much of the original work was done by placing successively thicker layers of foil between a beta source and a counter and recording the count rate as a function of foil thickness. The results of such measurements are not applicable

to the present work because of the continuous distribution of electron energies which was used and because the geometrical arrangements employed were different. Schneider, et. al.,[24] have used a refinement of this method recently for monoenergetic conversion electrons separated by a beta spectrometer by counting the conversion peaks of $Au^{195}$ with various thicknesses of window and then extrapolating to obtain the count with no window. This procedure gives a value for transmission of each of the thicknesses used at each of the various conversion peaks. Using these values a transmission curve can be plotted for each of the films.

Ference and Stephenson[25] used an electron gun and accelerating voltage to produce a beam of electrons and a Faraday cup beyond the film to collect the electrons transmitted. Lane and Zaffarano[26] have reported a more comprehensive study along similar lines.

Agnew[27] and Butt[28] have made evaluations of transmission using post-acceleration. This is done by adding energy to the electrons which have passed through the final spectrometer slit until the further addition of energy caused no change in the count rate. This indicates that 100% transmission has been reached and the ratio of the count with no acceleration to this count gives the transmission.

---

[24] Schneider, H., et. al., op. cit.

[25] Ference, M., and Stephenson, R. J., Rev. Sci. Inst. 9, 246 (1938).

[26] Lane, R. O., and Zaffarano, D. J., I.S.C.-439, "Transmission of 0-50 Kilovolt Electrons by Thin Films with Application to Beta-Ray Spectroscopy", (Dec., 1953).

[27] Agnew, H. M., Phys. Rev. 77, 655 (1950).

[28] Butt, D. K., Proc. Phys. Soc. of London, 63A, 986 (1950).

A pre-accelerator has been used by Chang and Cook[29] to find the transmission of films. The method of Chang and Cook is based on a comparison of the count rates with and without a small pre-accelerating voltage. It suffers, however, from three basic difficulties. In the first place, the entire change in transmission was assumed to be due to counter window transmission instead of to a combination of focusing due to the applied field and window absorption. In the second place, the absorption curve thus obtained was forced to fit an exponential absorption characteristic which was not a particularly good representation of the data. Last, Chang and Cook appear to have made an error in not correcting the spectra with and without acceleration to the same momentum interval as explained here in Section III C.

A fourth method for obtaining counter window transmission involves a comparison of an experimental beta spectrum with the known true shape of the spectrum. The Fermi plot of $Pm^{147}$ has been found to be linear down to at least 8 kev by Langer, Motz and Price.[30] By comparison of the plot obtained with a thin source to an extrapolation of the high energy linear portion of the plot, a transmission correction can be made. This general method has been used by Wagner, Freedman and Engelkemeir[31] and by Lane and Zaffarano.[32]

---

29 Chang, Chia-hua, and Cook, C. S., op. cit.

30 Langer, L. M., Motz, J. W., and Price, H. C. Jr., Phys. Rev. 77, 798 (1950).

31 Wagner, F., Freedman, M. S., and Engelkemeir, D. W., Phys. Rev. 88, 1155 (1952).

32 Lane and Zaffarano, op. cit.

The comparison spectra method was used here since it was felt that this method permitted an examination of the focusing effect of the spectrometer independent of the window transmission while use of an acceleration method would not have separated the focusing effect from the transmission effect. The sources were prepared as described under the section on source preparation and should give accurate transmission corrections down to 25-30 kev on the basis of studies by Langer, Motz and Price[33] on effects of source thickness using essentially the same preparation technique.

The values of $\sqrt{N_1(p)/f}$ were obtained using the Bureau of Standards Tables.[34] These values were plotted against the energy as shown in Figure 14. The high energy portion forms a straight line, which is extrapolated in the low-energy region. Dividing the experimental value of $\sqrt{N_1(p)/f}$ by the corresponding value of the extrapolated line gives $\sqrt{N_1(p)ex}/\sqrt{N_1(p)}$ . Squaring this gives $N_1(p)_{ex}/N_1(p)$ or the fractional transmission at that energy. These fractional values are plotted against energy to give a transmission curve as shown in Figure 15.

The curve corresponds quite closely to that of Lane and Zaffarano for a formvar-Al film of .63 mg/cm$^2$ area density. The film used here was .51 mg/cm$^2$ thick, but because the electrons

---

33 Langer, Motz and Price, op. cit.

34 National Bureau of Standards, Applied Mathematics Series, No. 13, Tables for the Analysis of Beta Spectra, June 2, 1952.

UNCLASSIFIED
ORNL-LR-DWG. 31506

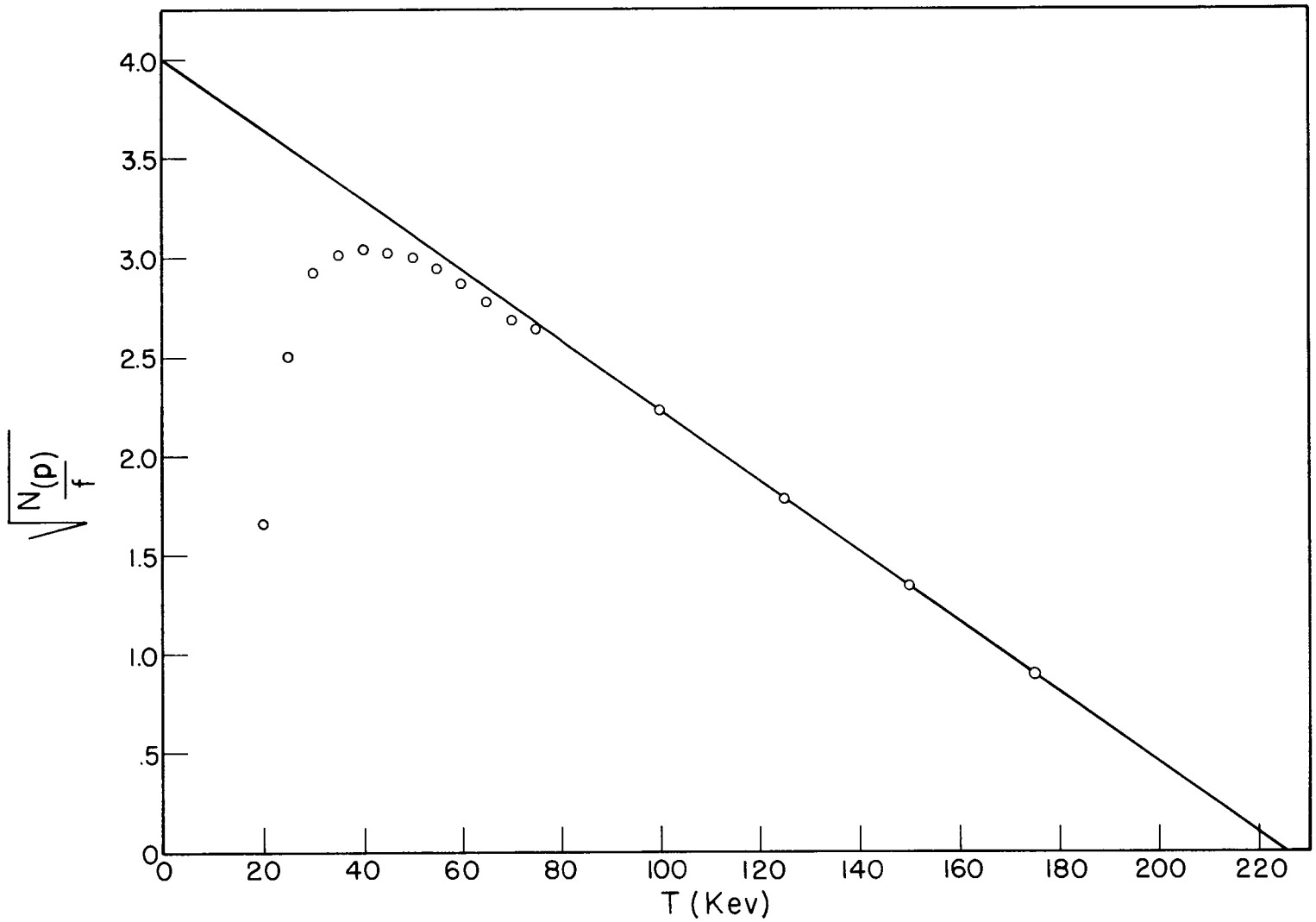


Figure 14. Fermi Plot of $Pm^{147}$.

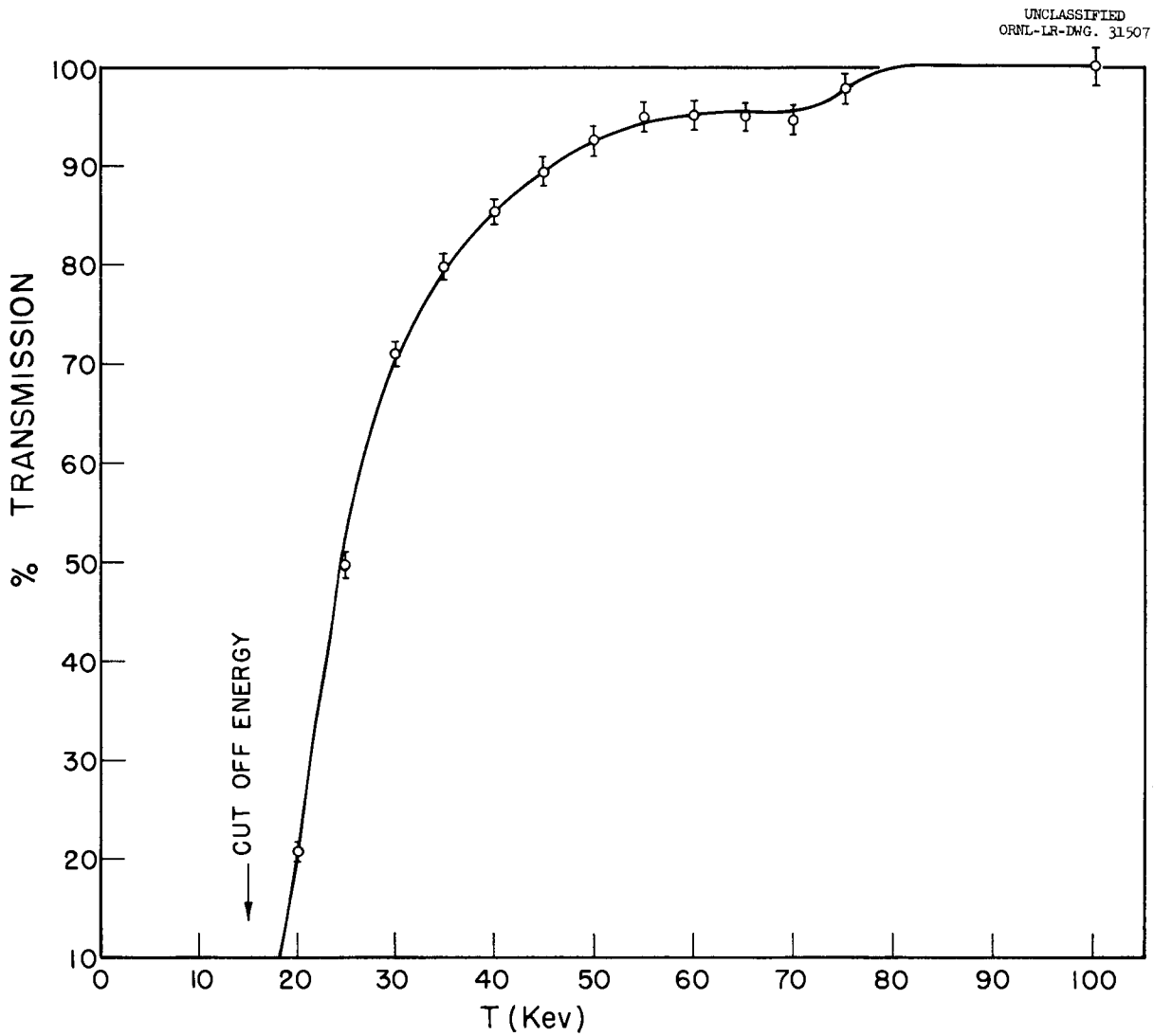


Figure 15. Transmission Curve of Typical Counter Window.

struck at an angle of about 45 degrees, the effective thickness was somewhere between this value and .72 mg/cm$^2$. Still the curve is of the same general shape and has only slightly lower transmission at corresponding energies as compared with the curve of Lane and Zaffarano as would be expected.

A fairly sharp drop in transmission is apparent in the energy range from 65 to 75 kev. This drop is assumed to be due to the low-energy cut-off of the counter seam, since it appears for all counters and is variable from counter to counter. It is expected that this effect could be eliminated by shielding the seam with a beta-absorbing strip.

## D. Variation of Focusing with Acceleration

The focusing of electrons as a function of acceleration voltage was studied for two source geometries. The results for a $Pm^{147}$ ring source of about 1 millimeter radial width using a source defining hole at the center of the sphere of three millimeters diameter are shown in Figure 16.

The count rates at initial electron energies of from thirty to one hundred kev were obtained using accelerations of 0, 10, 19.6 and 28.9 kilovolts. These count rates were corrected to 100% counter window transmission using the transmission curve obtained from the thin promethium source. The resulting corrected count rates were then

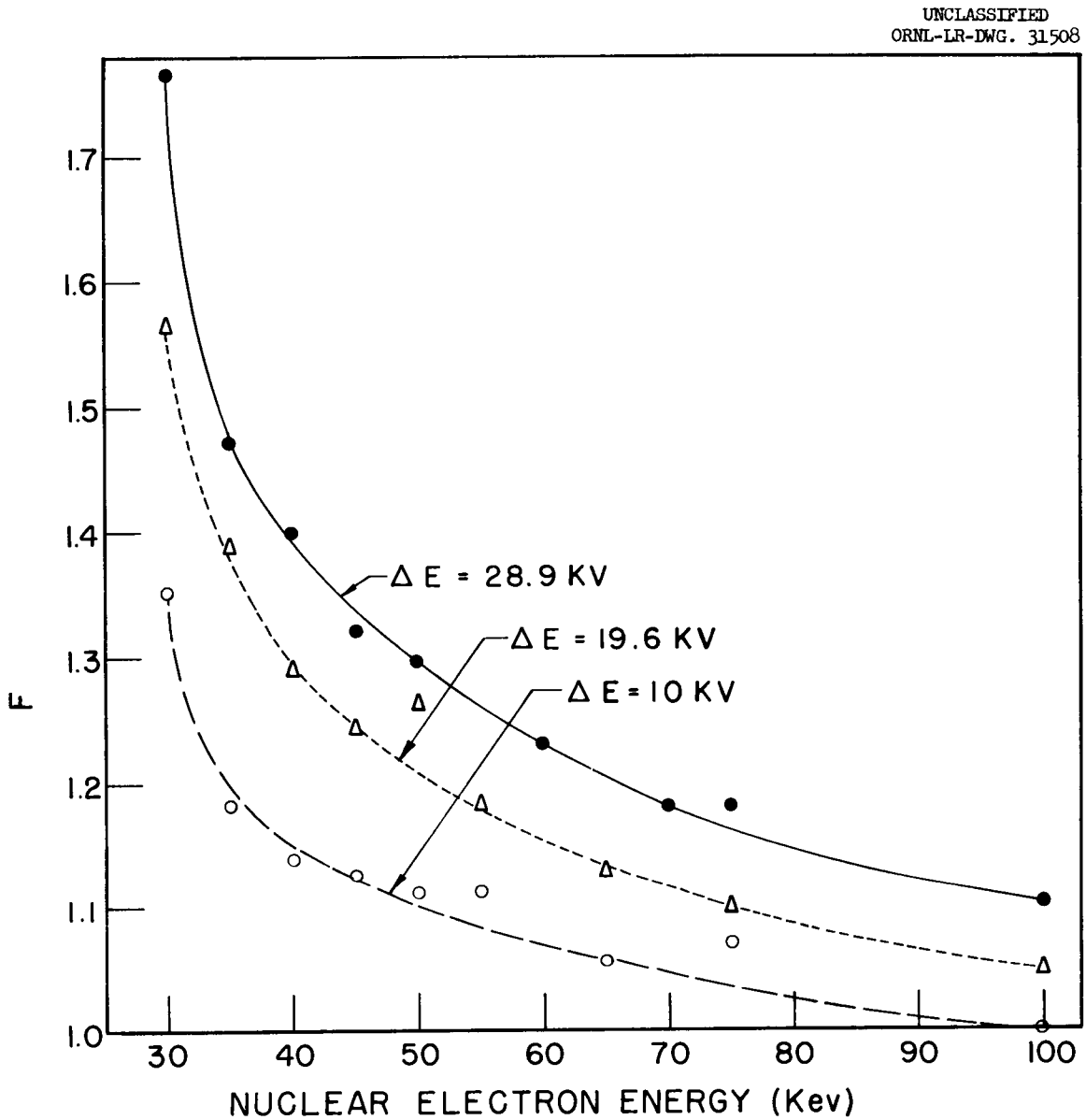


Figure 16. Focusing as a Function of Energy at Source for Various Added Energies.

divided by the current in case of the zero acceleration data or corrected to the proper momentum distribution by multiplying by $\frac{I_p}{(I_{p'})^2}\left(1 + \frac{\Delta E}{T+m_o c^2}\right)$ for accelerated electrons as discussed in Section III C. Ratios F of the resulting N(p)(accelerated) to N(p) (without acceleration) are plotted to show the gain in N(p) with acceleration.

It can be seen from the graph that the focusing increases as the accelerating potential increases for a constant source energy. Furthermore, for a constant acceleration voltage, the focusing increases as the energy at the source decreases. Data taken using a one-millimeter diameter point source and adding energy in five kilovolt steps up to twenty kilovolts indicate a similar behavior.

## E. Variation of Focusing With Changes in Source Size

The focusing effect was studied as a function of source geometry as is shown in the graph in Figure 17. Here the focusing F with twenty kilovolts acceleration is plotted against the initial electron energy for various sources. The focusing F(p) was calculated as explained in the previous section.

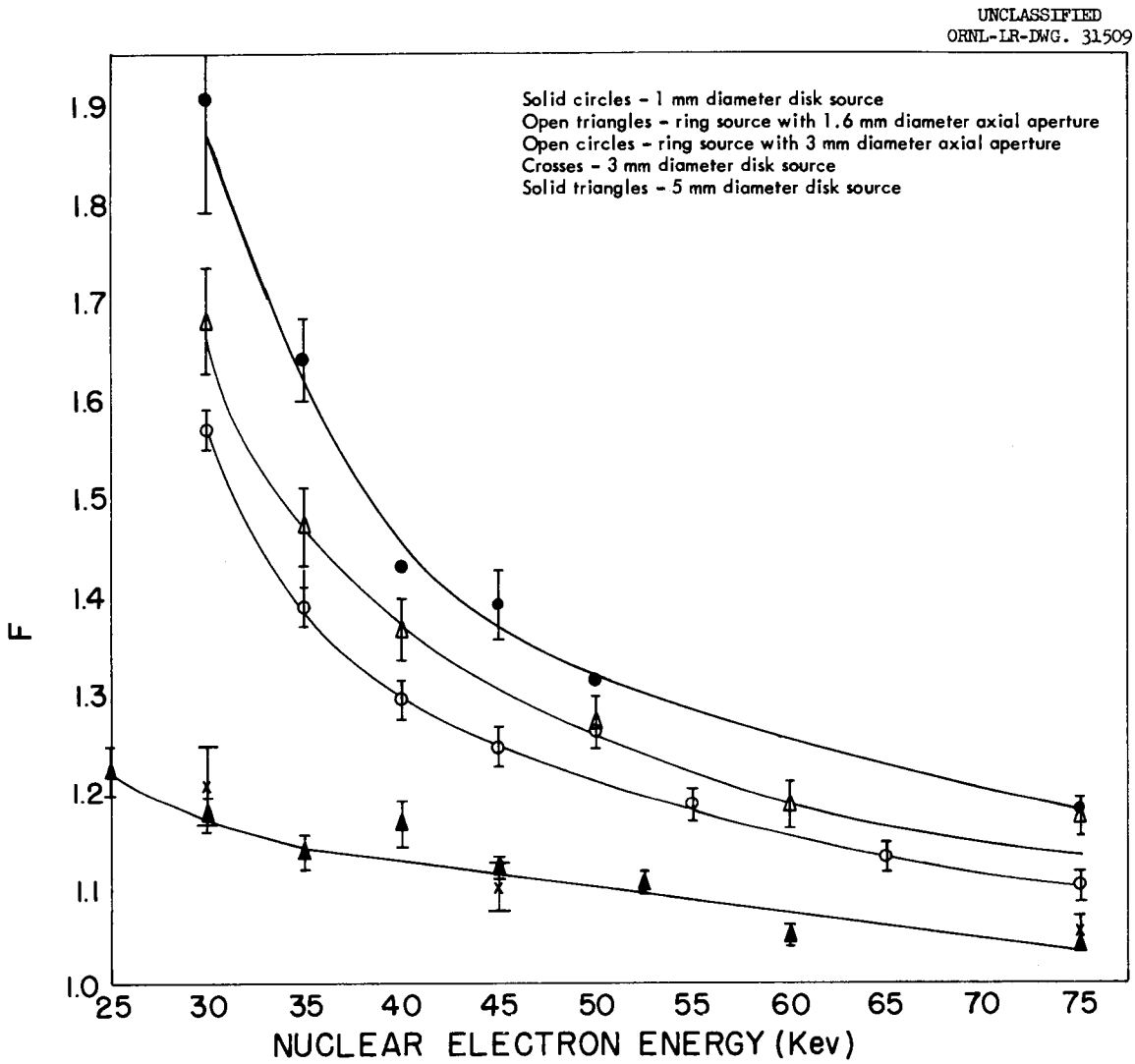


Figure 17. The Dependence of Focusing on Source Geometry.

From these graphs it can be seen that there is a much larger focusing effect from a small disk source (represented by solid circles) or a ring source with a defining aperture (represented by open triangles) than there is from large diameter disk sources (crosses and solid triangles). An increase in focusing with a decrease in the source defining aperture is also seen with a ring source (open circles compared to open triangles). It was not possible to maintain disk source diameters at precise values and so the dimensions given must be considered as estimates only. For example, in the case of the large disks the results for sources of 3 and 5 millimeter diameters are identical within the limits of the error.

The sources, except for the large disks, were made quite thick to give a reasonable count rate. All were prepared as described under source preparation.

Below thirty kev only a rough estimate of the focusing effect can be made, due to lack of knowledge of the counter window transmission and of source thickness effects. However, for the large disk sources Fermi plots continued down to five kev showed only small deviations above the extrapolated Fermi line, thus indicating that the focusing does not increase excessively in the lower energy region.

For the sources showing larger focusing effects (the ring and 1 mm disk sources), nothing definite can be said about the region below 30 kev. The data continued to climb above the extrapolated Fermi line rapidly, but this could be partially due to source thickness effects since these sources were not thin.

# VI. DISCUSSION AND SUMMARY

A counter monitoring system was designed and constructed for use during both manual and automatic spectrometer operation. A solenoid operated shutter was used to uncover an alpha source in the vicinity of the spectrometer counter. The count rates with this source were used as a criteria to utilize or reject data.

The small cylindrical Geiger counter was modified by replacing the 1 $mg/cm^2$ aluminum-coated mylar window with a .5 $mg/cm^2$ gold-coated formvar window and by operating at a lower pressure of 27 cm Hg of Tracerlab "Geiger Gas". Such counters had a useful like of 40-70 hours after which the walls appeared to become brittle. The low background count of from 2-5 counts per minute made them especially useful where count rates were low.

The transmission of this counter was determined using the linear Fermi plot of Promethium 147. The cut-off energy was about 15 kev. The shape of curve compared well with the results of similar studies by others.

A double hemispherical pre-accelerator was built. The inner sphere had a cavity which accommodated either ring or point sources. The hemispheres were machined from aluminum with annular slots to permit passage of the electrons.

The problem of the conversion of a count rate with pre-acceleration to a true momentum distribution was considered and an algebraic expression relating the two was obtained. The expression did not include focusing effects which could thus be evaluated separately. Also discussed was the effect of the pre-acceleration on resolution.

The focusing action of the accelerator was studied as a function of accelerating voltage and source geometry by comparison of the momentum distributions with and without acceleration. The focusing was found to increase as the accelerating voltage increased and to be greater for small diameter sources than for larger sources. An approximate analysis of the effect of the accelerating field on particle trajectories was made which may serve to indicate when focusing effects may be expected for various sphere sizes, electron energies, and accelerating potentials.

# VII. CONCLUSIONS

The study of transmission by use of a thin source of known spectrum is rapid and straight forward once the source has been prepared. The principal limitation of the method at low energy is the low count rate encountered due to the necessary thinness of the source and the effective narrowing of the momentum window of the spectrometer.

The method used for the study of focusing is useful only over the energy interval for which the counter transmission can be accurately determined. Since the focusing does not depend upon source thickness, the activity of the sources used can be adjusted to give reasonable count rates.

Pre-acceleration provides two decided advantages, over ordinary spectrometer operation, both of which contribute to high count rates and necessarily better statistics. The first of these is to reduce counter window transmission losses. The second is to make the slits effectively wider at lower energies. While the latter results in loss of resolution, this is of no great concern in studies of continuous spectra and many conversion and Auger spectra. The above is particularly important when the spectrometer is of the high resolution type such as the one used here.

It appears that the source geometry used is quite critical in determining the focusing effect observed. If the results obtained from a study of focusing or a combination of focusing and window transmission are to be used in correcting data, then the geometry of the standard source and the unknown source must be the same. In our case this condition can be most easily met by use of a ring source or a large area disk source.

Bibliography

Agnew, H. M., Phys. Rev. 77, 685 (1950).

Birkhoff, R. D., Hubbell, H. H. Jr., Cheka, J. S., and Ritchie, R. H. Health Physics 1, 27 (1958).

Birkhoff, R. D., Smith, A. W., Hubbell, H. H. Jr., and Cheka, J. S., Rev. Sci. Inst. 26, No. 10, 959 (1955).

Blackstock, A. W., Birkhoff, R. D., and Slater, M., Phys. Rev. 95, 303 (1954); Rev. Sci. Inst., 26, 274 (1955).

Blanchard, R. L., Kahn, B., and Birkhoff, R. D., "The Preparation of Thin, Uniform Sources for a Beta-Ray Spectrometer", ORNL-2419, Oak Ridge National Laboratory, Oak Ridge, Tennessee (1957).

Butt, D. K., Phys. Soc. of London, 63A, 986 (1950).

Chang, Chia-hua, and Cook, C. S., Nucleonics, 10, 24 (1952).

Cook, C. S., Technical Report 105, "Experimental Technique in Beta Spectroscopy", Washington University (1953).

Eyring, C. F., Mackeown, S. S., and Millikan, R. A., Phys. Rev. 31, 900, (1928).

Ference, M., and Stephenson, R. J., Rev. Sci. Inst. 9, 246 (1938).

Freedman, M. S., Porter, F. T., Wagner, F. Jr., and Day, P. P., Phys. Rev. 108, 836 (1957).

Gates, J. G. and Edwards, D. F., Nucleonics 13, No. 12, 57 (1955).

Juillard, A., and Moussa, M. A., J. de Phys. et le Radium 19, 94 (1958).

Kobayashi, Yoshiyuke, J. of Phys. Soc. of Japan, 8, No. 4, 440 (1953).

Lane, R. O., and Zaffarano, D. J., I.S.C.-439, "Transmission of 0-50 Kilovolt Electrons by Thin Films with Application to Beta-Ray Spectroscopy", (Dec. 1953).

Langer, L. M., and Cook, C. S., Rev. Sci. Inst. 19, 257 (1948).

Langer, L. M., Motz, J. W., and Price, H. C. Jr., Phys. Rev. 77, 798 (1950).

National Bureau of Standards, Applied Mathematics Series, No. 13, Tables for the Analysis of Beta Spectra, June 2, 1952.

Rathbun, E. R. Jr., and Jensen, E. N., Geiger Müller Counters for Low-Energy Work; I.S.C.-254 (August, 1950).

Schneider, H., Huber, O., Humbel, F., de Shalit, A., and Zhünti, W., Helv. Phys. Acta, 25, 259 (1952).

Siegbahn, K., BETA AND GAMMA SPECTROSCOPY, (Interscience Publishers, New York, North Hollard Publishing Co., Amsterdam, 1955).

Spangenberg, K. R., VACUUM TUBES, (McGraw-Hill, 1948), pp. 409-410.

Spencer, L. V., and Fano, U., Phys. Rev., 93, 1172 (1954).

Trump, J. G., and Van de Graaff, R. J., Phys. Rev. 75, 44 (1949).

Wagner, F., Freedman, M. S., and Engelkemeir, D. W., Phys. Rev. 88, 1155 (1952).

ORNL-2569
Instruments
TID-4500 (13th ed., Rev.)
February 15, 1958

INTERNAL DISTRIBUTION

1. C. E. Center
2. Biology Library
3. Health Physics Library
4-5. Central Research Library
6. Reactor Experimental Engineering Library
7-26. Laboratory Records Department
27. Laboratory Records, ORNL R.C.
28. L. B. Emlet (K-25)
29. J. P. Murray (Y-12)
30. A. M. Weinberg
31. J. A. Swartout
32. E. D. Shipley
33. M. L. Nelson
34. K. Z. Morgan
35. S. C. Lind
36. A. S. Householder
37. C. S. Harrill
38. C. E. Winters
39. A. H. Snell
40. E. H. Taylor
41. W. H. Jordan
42. T. A. Lincoln
43. A. Hollaender
44. F. L. Culler
45. H. E. Seagren
46. D. Phillips
47. M. T. Kelley
48. E. E. Anderson
49. R. S. Livingston
50. C. P. Keim
51. K. E. Cowser
52. C. D. Susano
53. L. B. Farabee
54. F. J. Davis
55. R. J. Morton
56. C. E. Haynes
57. E. G. Struxness
58. W. E. Cohn
59-109. H. H. Hubbell, Jr.
110. D. E. Arthur
111. J. Neufeld
112. M. J. Skinner
113. J. C. Hart
114. T. H. J. Burnett
115. W. J. Lacy
116. G. S. Hurst
117. T. E. Bortner
118. J. A. Lane
119. H. P. Yockey
120. C. E. Clifford
121. J. L. Gabbard
122. R. A. Charpie
123. D. M. Davis
124. P. E. Brown
125. E. D. Gupton
126. J. C. Ledbetter
127. R. L. Clark
128. G. C. Cain
129. L. C. Johnson
130. W. W. Ogg
131. O. D. Teague
132. E. L. Sharp
133. E. J. Kuna
134. H. H. Abee
135. C. R. Guinn
136. A. D. Warden
137. C. C. Sartain
138. J. R. Muir
139. J. A. Auxier
140. M. F. Fair
141. S. I. Auerbach
142. G. W. Royster, Jr.
143. R. R. Dickison
144. F. W. Sanders
145. F. C. Maienschein
146. W. J. Boegly, Jr.
147. F. L. Parker
148. W. E. Lotz
149. B. Fish
150. M. B. Edwards
151. F. M. Empson
152. G. G. Robeck
153-202 R. D. Birkhoff
203 R. H. Ritchie
204 J. A. Harter
205 W. G. Stone
206 R. M Johnson
207 P. N. Hensley
208 R. W. Peelle
209-258 W. O. Olson
259 D. R. Nelson
260 E. B. Wagner
261 S. K. Allison (consultant)

262. W. H. Langham (consultant)
263. A. Wolman (consultant)
264. R. Zirkle (consultant)
265. L. S. Taylor (consultant)
266. ORNL - Y-12 Technical Library, Document Reference Section

EXTERNAL DISTRIBUTION

267. Department of Physics, University of California, Davis, Calif. (David B. Beard)
268. U.S. Naval Radiological Defense Laboratory, San Francisco 24, Calif. (Clarence S. Cook)
269. Argonne National Laboratory, Box 299, Lemont, Ill. (M. S. Freedman)
270. Department of Physics, California Institute of Technology, Pasadena, Calif. (Jesse W. M. DuMond)
271. Department of Physics, Michigan State University, East Lansing, Mich. (S. K. Haynes)
272. Department of Physics, University of California, Davis, Calif. (John A. Jungerman)
273. Department of Physics, Vanderbilt University, Nashville, Tenn. (John I. Hopkins)
274. Department of Physics, Indiana University, Bloomington, Ind. (L. M. Langer)
275. Department of Physics, Iowa State College, Ames, Iowa (D. J. Zaffarano)
276. Knolls Atomic Power Laboratory, Schenectady, N.Y. (Robert J. Feinberg, GE employee)
277. Industrial Reactor Laboratories, Plainsboro, N.J. (Andrew P. Hull)
278. 1st Lt. J. C. Villforth, 58 Diana Lane, W., Fairbarn, Ohio
279-794. Given distribution as shown in TID-4500 (13th ed., Rev.) under Instruments category