MARTIN MARIETTA ENERGY SYSTEMS LIBRARIES
3 4456 0351083 1

218
CENTRAL RESEARCH LIBRARY
DOCUMENT COLLECTION

ORNL-2851
Reactors-Power

A STUDY OF PROBLEMS ASSOCIATED WITH RELEASE OF FISSION PRODUCTS FROM CERAMIC FUELS IN GAS-COOLED REACTORS

By

An Ad Hoc Study Group

J. A. Lane
L. L. Bennett
H. N. Culver
L. J. King
J. P. Sanders
J. L. Scott
W. E. Unger

CENTRAL RESEARCH LIBRARY
DOCUMENT COLLECTION
LIBRARY LOAN COPY
DO NOT TRANSFER TO ANOTHER PERSON
If you wish someone else to see this document, send in name with document and the library will arrange a loan.

OAK RIDGE NATIONAL LABORATORY
operated by
UNION CARBIDE CORPORATION
for the
U.S. ATOMIC ENERGY COMMISSION

Printed in USA. Price $2.25. Available from the
Office of Technical Services
Department of Commerce
Washington 25, D.C.

LEGAL NOTICE

This report was prepared as an account of Government sponsored work. Neither the United States, nor the Commission, nor any person acting on behalf of the Commission:

A. Makes any warranty or representation, expressed or implied, with respect to the accuracy, completeness, or usefulness of the information contained in this report, or that the use of any information, apparatus, method, or process disclosed in this report may not infringe privately owned rights; or

B. Assumes any liabilities with respect to the use of, or for damages resulting from the use of any information, apparatus, method, or process disclosed in this report.

As used in the above, "person acting on behalf of the Commission" includes any employee or contractor of the Commission, or employee of such contractor, to the extent that such employee or contractor of the Commission, or employee of such contractor prepares, disseminates, or provides access to, any information pursuant to his employment or contract with the Commission, or his employment with such contractor.

ORNL-2851

Reactors-Power
TID-4500 (15th ed.)

Contract No. W-7405-eng-26

Reactor Systems Evaluation Department

A STUDY OF PROBLEMS ASSOCIATED WITH RELEASE OF FISSION PRODUCTS FROM CERAMIC FUELS IN GAS-COOLED REACTORS

by

An Ad Hoc Study Group

J. A. Lane, Group Leader

L. L. Bennett
H. N. Culver
L. J. King
J. P. Sanders
J. L. Scott
W. E. Unger

DATE ISSUED

~~OCT 2 1959~~

OAK RIDGE NATIONAL LABORATORY
Oak Ridge, Tennessee
Operated by
UNION CARBIDE CORPORATION
for the
U. S. ATOMIC ENERGY COMMISSION

MARTIN MARIETTA ENERGY SYSTEMS LIBRARIES

3 4456 0351083 1

ABSTRACT

The diffusion of fission products out of the fuel elements leads to increased shielding requirements, a greater hazard due to their possible release to the surroundings, and more difficult maintenance problems. Continuous processing of the contaminated coolant may alleviate the hazard and maintenance problems; however, extensive in-pile loop experiments are needed for a quantitative evaluation of methods. By proper design of major components such as heat exchangers and blowers, direct maintenance of contaminated equipment may be possible, with or without premaintenance decontamination. Such an approach is to be preferred to that of providing remote maintenance facilities which, in the case of the reactors considered, added from 0.7-1.8 mills/kwhr to the cost of power.

1. SUMMARY 1

2. INTRODUCTION 5

2.1 Objectives of Study 6
2.2 Scope of Study 6
2.3 Approach to the Problem 7

3. RELEASE OF FISSION PRODUCT ACTIVITY FROM CERAMIC FUEL ELEMENTS .. 9

3.1 Properties of Important Fission Product Chains 9
3.1.1 Fission Product Yield 9
3.1.2 Half-Life 9
3.1.3 Method of Disintegration 10
3.1.4 Release Rate from Fuel 10
3.1.5 Chemical Properties 10
3.1.6 Important Fission Products 11
3.2 Discussion of Mechanism for Release 11
3.2.1 Recoil Process 13
3.2.2 Diffusion Process 13
3.3 Factors Affecting the Release Rate 13
3.3.1 Fuel, Matrix, and Coating Materials 14
3.3.2 Temperatures 16
3.3.3 Temperature Distribution 17
3.3.4 Particle Size 17
3.3.5 Properties of Bulk Fuels 19
3.3.6 Properties of the Coolant 20
3.4 Radioactivity Release to the Coolant of Specific Reactors .. 20
3.4.1 The High-Temperature Gas-Cooled Reactor, HGCR-1 20
3.4.2 Assumptions and Uncertainties in HGCR-1 Study 21
3.4.3 Diffusion from the UO_2 23
3.4.4 Diffusion from the Graphite 23
3.5 The Pebble Bed Reactor (PBR) 25
3.6 The High-Temperature Gas-Cooled Reactor (HTGCR) 27

4. CHEMICAL PROCESSING OF CONTAMINATED GAS COOLANTS 28

4.1 Fission Product Removal Processes 28
4.1.1 Solids 28
4.1.2 Halogens 30
4.1.3 Noble Gases 31
4.1.4 Removal with Impurities Out-Gassed from Graphite 32
4.2 Feasibility of Continuous Processing of the HGCR-1 and PBR Coolant Systems 33
4.2.1 Effect of Processing on Shielding Requirements 33
4.2.2 Effect of Processing on the Maintenance of Components 33
4.2.3 Potential Hazards Reduction 35

4.2.4 Effect of Side Stream Processing on Activity in Blowers 35
4.2.5 Effect of Fuel Type 37

5. OPERATION AND MAINTENANCE OF CONTAMINATED EQUIPMENT 38

5.1 Premaintenance Decontamination 38
5.2 Remote Maintenance Methods 41
5.2.1 Remote Servicing in Place 41
5.2.2 Remote Replacement 42
5.2.3 Built-In Spare Equipment 42
5.3 System Operation and Maintenance Problems 42
5.3.1 Piping Contamination 44
5.4 Steam Generator Maintenance 44
5.4.1 Dose Rate at Steam Generator 44
5.4.2 Steam Generator Design for Direct Maintenance 46
5.5 Blower Maintenance 47
5.6 Feasibility of Direct vs. Remote Maintenance 48

6. RELATIVE COSTS OF CLEAN VS. CONTAMINATED GAS SYSTEMS 50

6.1 Cost Estimates for Gas-Cooled Reactors 50
6.1.1 The HGCR-1 and the Extrapolated GCR-2 Capital Cost Comparison 51
6.1.2 Operating Costs for the HGCR-1 and Extrapolated GCR-2 54
6.2 Cost Reduction Realized from Elimination of Contaminant 56
6.2.1 Cost Reduction Due to the Elimination of Contaminant from the Coolant of the HGCR-1 56
6.2.2 Cost Reduction Due to Elimination of Contaminant from the Coolant of the PBR 58
6.3 Cost of Remote Maintenance Equipment 59
6.4 General Conclusions 60

7. RESULTS AND CONCLUSIONS 64

7.1 Review the Pertinent Literature on Fission Product Release from Irradiated Fuel Elements and Summarize the Present State of Experimental Work 64
7.2 Assuming Various Fuel Materials Including Ceramic Fuels and Various Geometries, Estimate Diffusion Coefficients and Calculate Probable Kind and Amount of Activity Due to Leakage from Elements 64
7.3 Determine the Present Capability of Processes for Continuous Removal of Fission Products from Gaseous Coolants 65
7.4 On the Basis of Present Removal Techniques Determine the Maximum Allowable Fission Product Leakage to the Primary Coolant 65

7.5 What is the Likelihood of Fission Products Plating Out on Surfaces of the Primary Gas System? 65
7.6 On the Basis of Anticipated Developments in Removal Processes, Determine the Maximum Allowable Fission Product Leakage to Primary Coolant Streams 67
7.7 Describe the Problems of Operation and Maintenance Which Would be Unique to These Systems and the Additional Costs Incurred 67
7.8 What is the Effect of Decay on the Diffusion of Fission Products Through Fuel Elements of Various Geometries and Composition? 67
7.9 Determine Areas of Fission Product Removal and Processing Whose Development is Most Vital to Any Reactor System Using Unclad Fuel Elements 67

8. REQUIRED RESEARCH AND DEVELOPMENT 68

8.1 Fission Product Release Studies 68
8.2 The Development of Processing Methods 68
8.3 Investigation of Remote Maintenance Techniques 69
8.3.1 Remote Welding 69
8.3.2 Helium Blowers 69
8.3.3 Remote Manipulating Equipment 70

9. REFERENCES 71

1. SUMMARY

This study has been undertaken to provide a basis for evaluating proposals involving the use of ceramic fuel elements. In particular, it deals with the problems associated with the escape of fission product activity to the primary coolant system of gas-cooled reactors employing ceramic fuels. The systems considered are those involving helium as the coolant, graphite as the moderator, and uranium-graphite fuel elements. Information used in making the study has been derived primarily from the conceptual design reports of the Oak Ridge National Laboratory, HGCR-1(1); Philadelphia Electric-General Atomic-Bechtel, HTGCR(2); and Sanderson Porter-Alco Products, PBR(3). Subsequent studies will be carried out as necessary to consider similar problems in other systems.

A comparison of projected power costs in gas-cooled reactors employing metal-clad and ceramic-clad fuel indicates that, due to the higher operating temperatures possible with ceramic cladding, a power cost reduction of about 2 mills/kwhr may be achieved. (See Table VIII.) The exact magnitude of this cost reduction, however, will depend on the amount of activity that is released from fuel elements and the costs associated with control of this activity.

One possible solution to the control of fission product activity is the development of an impervious ceramic coating which would retain all fission products and not be subject to radiation damage. Such fuel elements would be ideal, provided they had reasonably low fabrication costs and would not fail in the reactor because of the build-up of gaseous fission products. Present indications are that at the operating temperatures of interest to advanced gas-cooled reactors the build-up of gaseous fission products will in all likelihood limit fuel life.

At the other end of the scale, the use of unclad fuel elements in which fuel is exposed to the coolant might be proposed; however, this would result in the escape of fuel, as well as fission products, to the coolant. Maintenance problems in this case might approach those encountered in circulating fuel reactors. For this reason, most designs of advanced gas-cooled reactors are based on ceramic fuels, provided with a coating to prevent fuel and direct recoils from escaping, while permitting the release of fission products to the coolant. The type and level of activity of fission products that diffuse through this sheath or coating will depend on the design of the fuel element, its materials of fabrication, and its operating conditions.

In this regard, three types of coated fuel materials are considered in this study; i.e., graphite impregnated with uranium, a dispersion of UO_2 particles in graphite, and bulk UO_2 coated with graphite. In the first type the controlling mechanism for fission product escape is diffusion through the graphite; in the second, diffusion out of UO_2 or recoils out of UO_2 plus diffusion through the graphite; and in the third, diffusion out of UO_2. Thus it is seen that in all three cases activity is released from the fuel by a diffusion process, both in the fuel and in the fuel matrix

material. The amount of activity released from the fuel element, therefore, will be influenced mostly by the factors which influence the rate of diffusion. The amount of activity retained in the fuel will also depend upon the competitive processes of decay rate and diffusion rate. If a fuel element can be designed such that the retention time is long compared to the half-life of the active species, then the only activity which would be released in significant amounts would be the long-lived nuclides and the daughters of these nuclides. This is important from the standpoint of coping with the activity in the primary system since the individual problems depend on the escape of specific nuclides, rather than on the total activity. The shielding requirements of the primary system, for example, depend only on the most energetic gamma emitters. The biological hazard associated with the escape of coolant to the surroundings, on the other hand, is related mainly to the presence of iodine and other volatile fission products. Finally, maintenance problems may arise from the deposition of radioactive solids in various parts of the system.

In the case of the HGCR-1 fueled with 200-micron-diameter particles of UO_2 dispersed in AGOT graphite, it is estimated that 10^7 curies of energetic gamma activity (> 0.5 Mev) will be present in the primary gas system after long-term operation. This corresponds to 3×10^{-3} curies/watt or 0.06% of the total activity generated in the fuel. About 15% of this activity is due to volatile fission products, about 50% due to long-lived solids, and the remainder, noble gas activity. With other matrix materials and other types of fuel (impregnated graphite, coated UO_2 pellets, etc.) the amounts of activity diffusing to the gas system may be greater or less by factors of 10 or more than the value given above. Until more information is known about the behavior of the released nuclides, both as to deposition and ability to remove the nuclei with a cleanup system, it is difficult to define a satisfactory retention factor in the fuel. The importance of retaining all the fission products as opposed to allowing only the long-lived nuclei and stable gases to diffuse out of the fuel will depend upon the economics of the fuel cycle and the cost of maintaining the system.

If fuel elements sheathed with diffusion-permeable material will permit only gases to escape, the coolant process need contend only with these gases and their decay products. This, coupled with the fact that short-lived fission products will decay so rapidly that their removal is not required, leaves only Cs^{137}-Ba^{137m} and Ba^{140}-La^{140} (98% of the total activity 10 days after shutdown) as objectionable nuclides that must be removed in the interest of facilitating equipment maintenance.

Cesium will be a vapor at the fuel temperature, and hence some will diffuse from the fuel element as a gas. It will remain as a gas at low concentration, and only after some months of reactor operation will its concentration increase to the point where it will begin to condense in the cold parts of the coolant loop. Surface absorption of cesium vapor on solid surfaces near the entrance of the loop, reaction with water, oxygen or other impurities present in the coolant, or removal by chemical

precipitation or charcoal absorption in the out-gas processing bypass, may effectively prevent cesium from reaching sufficient concentration to condense in the heat exchanger or blower.

The removal of solid particles, such as barium and strontium, suspended in the coolant is a more subtle problem than it appears to be. The small particles deposit on component surfaces, or on each other to form agglomerates. The two mechanisms are in competition and appear to be influenced by temperature, particle size and concentration, and, to a lesser extent, system geometry. The deliberate introduction of quantities of solids into the coolant stream to promote agglomeration of fission product particulates, followed by cyclone separation of the agglomerates, may effectively and economically remove the radioactive particulates that would otherwise deposit upon the surfaces of coolant components.

The radiological hazard associated with the escape of coolant to the surroundings, through leakage or rupture of the system, can be reduced to tolerable levels by processing a bypass stream at a rate of 10^{-5} of the total flow. Although such bypass processing does not appreciably reduce the activity due to noble gases, these can be diluted adequately by discharge up a stack. Bypass processing would also not remove the solids which have settled out; however, these would remain in the system in the event of a rupture.

Even if processing of the coolant to solve the problem of maintenance of contaminated equipment proves impractical, chemical plant experience indicates that there is a possibility of chemically decontaminating equipment effectively and at moderate cost. Experience with aqueous process equipment appears applicable to gas coolant components with suitable design modifications. These consist primarily of piping arrangements to prevent aqueous solutions from reaching the bulk of the dry coolant, and provisions for contacting all surfaces of the components with decontaminating agents.

An alternative approach to direct maintenance, with or without pre-maintenance decontamination, is that of providing facilities for remote maintenance. In this study it was concluded that in most instances the most practical method of remote maintenance is use of remote handling equipment to remove and replace the defective component.

Recent experimental data indicate that the fission products may deposit preferentially in the steam generators. If this is borne out by further tests, the activity depositing in other pieces of equipment might be sufficiently low that direct maintenance could be performed.

Consideration was given to a steam generator design which would allow the tube ends to be approached directly for plugging of defective tubes. This design appears to be practical and economically desirable compared to a design requiring remote maintenance.

In order to estimate the cost attributable to the presence of fission product activity in the primary gas coolant, the design cost estimates of the GCR-2, the HGCR-1, and the PBR have been studied. The comparison of the cost estimates for the HGCR-1 and an extrapolation of the GCR-2 design, both producing 1130 Mwe, indicated a power cost for the unclad ceramic fuel system of 7.53 mills/kwhr compared to 9.57 mills/kwhr for a metal-clad system. This lower power cost is achieved in spite of increased expenditures for remote maintenance equipment, spare components, and additional containment and shielding. It is due principally to the increase in specific power resulting in a relatively smaller reactor core and the accompanying decrease in fuel inventory, core shielding, and related charges.

An estimate of the cost of remote maintenance facilities was obtained by listing those items for the HGCR-1 and the PBR design estimate which might be eliminated if the fission product activity were eliminated from the coolant. This might be accomplished either by the use of an impermeable ceramic coating on the fuel element or by processing the circulating coolant to remove fission products. The total reduction thus listed represents the maximum amount which could profitably be expended on a satisfactory coating or on equipment for removing fission products from the system. The maximum possible reduction in capital cost was estimated to be $26,700,000 for the HGCR-1 and $6,440,000 for the PBR. The reduction in power costs in mills per kilowatthour was estimated to be 0.72 for the HGCR-1 and 1.81 for the PBR.

To illustrate the cost of remote operations, cost estimates and results of preliminary investigations for maintenance of a large-scale homogeneous reactor, the Westinghouse-Pennsylvania Electric PAR, have been cited. These figures are helpful in emphasizing the points that remote maintenance items can represent a major expenditure in the operation of systems with contaminated coolants and that these expenditures are relatively insensitive to changes in reactor power level.

2. INTRODUCTION

The metal cladding of solid fuel material in nuclear reactors normally accomplishes three things: (1) the prevention of a chemical reaction between fuel material and coolant, (2) the maintenance of the physical integrity of fuel elements, and (3) the retention of radioactive fission products within the fuel. Such cladding, however, has a number of disadvantages, such as absorbing neutrons, introducing a thermal barrier between the fuel and coolant, and in many cases imposing a limitation on the maximum allowable operating temperature of the reactor. The fact that the cladding is intentionally made impervious, moreover, tends to put a limit on the lifetime of fuel elements since the retention of gaseous fission products eventually results in the build-up of excessive pressures and rupture of the cladding.

In fuel-coolant systems which are compatible chemically, a choice may be made between (1) no cladding at all, (2) a cladding which retains fuel but allows fission products to diffuse into the coolant, (3) a cladding which retains fuel and solid fission products but permits the diffusion and escape of gaseous fission products, and (4) an impervious cladding. The choice among these alternative approaches will depend on the relative performance of the fuel elements in each case, compared to the magnitude of the problems introduced by the release of fission products or fuel plus fission products to the primary coolant system.

Of the various fuel-coolant combinations which do not require cladding for chemical reasons and may, therefore, be feasible from a technical standpoint, systems of most immediate interest involve the use of gas coolants. In particular, gas-cooled reactors employing ceramic-clad fuel, rather than metal cladding, are attractive because of the possibility of higher temperature operation with its attendant economic advantages. Such reactors are very promising; however, their long-term outlook depends on the development of a satisfactory fuel element or satisfactory methods of coping with large amounts of activity release. What is desired is a fuel element with a completely impervious ceramic sheath whose lifetime in the reactor is not governed by the build-up of gaseous fission products or radiation damage. Such fuel elements would retain the advantages of high-temperature operation without encountering the problem of coping with activity in the primary gas system. Until such ceramic-clad fuel elements are available, however, the choice lies between unclad fuel and fuel covered with a permeable sheath acting as a barrier to the diffusion of fission products.

The problems associated with the use of an unclad fuel vary both in type and magnitude from those encountered with partially clad fuel. With unclad fuel elements the possibility exists of fuel particles getting into the coolant, in which case activation of piping and equipment by delayed

neutrons in the fuel would occur. This might preclude the possibility of direct maintenance of equipment, or lead to the requirement of continuous processing of the gas stream for fuel removal. Thus, most proposed types of ceramic fuel elements are provided with a sufficient coating or cladding so that no fuel or direct recoils can escape to the coolant. With such fuel elements, one has the possibility of carrying out direct maintenance if the release of fission products is sufficiently low, continually removing the fission products from the coolant to keep the system clean, decontaminating equipment when necessary for direct maintenance, or, finally, doing remote maintenance. The relative costs of these alternative approaches will depend on the amounts and types of fission products that escape to the coolant, where and how they deposit in the system, and the ease of their removal.

2.1 Objectives of Study

It is seen from the above that there are several possible methods of coping with the fission product activity released from partially clad ceramic fuel elements to a gas coolant. Information necessary to evaluate the relative merits of these various approaches, however, or to determine whether any one approach provides an economic solution to the problem is lacking. Accordingly, this study was undertaken at the request of the Division of Reactor Development of the Atomic Energy Commission to provide preliminary information on this subject. Specific studies include a summary of available experimental data on fission product release from irradiated fuel elements, a calculation of the probable kind and amount of activity due to leakage from selected types of fuel elements, a study of the effect of decay of fission products on their diffusion through fuel elements of various geometries and compositions, a survey of methods and costs of continuous removal of specific fission products, a study of possible methods of premaintenance decontamination of equipment, and, finally, an estimation of the relative costs of direct and remote maintenance.

2.2 Scope of Study

In order to provide results in a reasonably short time, the scope of this study has been limited to a consideration of three specific reactor designs which utilize ceramic fuel. These are: The Oak Ridge National Laboratory's HGCR-1, which uses graphite-covered plates containing 200-micron particles of UO_2 dispersed in graphite; the Philadelphia Electric-General Atomic-Bechtel's High-Temperature Gas-Cooled Reactor, HTGCR, which uses cylinders of graphite-ThC-UC so designed that fission products diffuse to a purge gas stream but not to the primary coolant; and, finally, the Sanderson and Porter-Alco Products Inc.'s Pebble Bed Reactor, PBR, which utilizes balls of graphite containing uranium in some form. Proposed methods of introducing uranium include impregnation with uranium salts, admixing UO_2 and graphite, or use of mixtures of UO_2-graphite inside a graphite shell. All of these so-called "unclad fuel" reactors use fuel elements designed to prevent the escape of fuel but not fission products to the gas stream. For this reason, problems associated with the escape of fuel to the coolant are not treated in this study.

Since the three reactors mentioned above all use helium as the coolant and graphite as the moderator and/or fuel diluent, this study is further limited in that other combinations of gases and moderators have not been considered. The use of BeO instead of graphite, for example, would certainly affect the magnitude of, and type of, fission products escaping to the gas stream; also, the use of CO_2 instead of helium would have a great influence on the methods of coping with activity in the primary coolant system. However, data are not sufficient for valid conclusions to be drawn from a comparison of these other gas-fuel matrix systems with that being considered in this study. References to these other systems are, however, included for the sake of completeness.

2.3 Approach to the Problem

The presence of fission product activity in the coolant leads to three problems: (1) the increased shielding requirements of primary gas system, (2) the hazard associated with the large amounts of activity circulating in the system, and (3) the maintenance of contaminated equipment. The magnitude of each of these problems depends on which fission products escape from the fuel. For example, the shielding requirements are only influenced by the energetic gamma emitters in the gas system. The hazard associated with activity in the coolant, on the other hand, is mainly due to the escape of halogens and other volatile fission products from the fuel, since in the event of constant leakage of coolant or rupture of the system the noble gases would be dispersed to the atmosphere and the majority of solid fission products would remain in the equipment. Finally, the maintenance problem depends only on the level of activity of deposited solids, since active particles and gases circulating in the loop can be removed by replacing the contaminated coolant with clean gas. Thus, the solution to the problem of coping with the activity in the coolant depends on control of all of the hard gamma activity to alleviate the shielding problem, control of gaseous activity to reduce the hazard associated with possible release of the coolant from the system, and control of deposited radioactivity to aid the maintenance problem. In each case, control of fission product activities of importance can be affected by, or influenced by, changing the diffusion rate from the fuel. This may be done by altering the diffusion rate from the fuel and/or matrix material or by controlling the permeability of the diffusion barrier surrounding the fuel element. By making this sheath impermeable to solids but permeable to long-lived volatile fission products, for example, one might hope to solve the maintenance problem. However, at the fuel element temperatures of interest, some fission products escape which subsequently deposit as active solids in the external system. Thus, the best one can do with a permeable diffusion barrier is to minimize, but not eliminate, the problem of maintaining contaminated equipment.

In order to reduce materially the shielding requirements of the primary gas system, total fission products in the coolant must be held to a very

small value. This can be accomplished by retaining the fission products within the fuel or by processing the entire gas system at a rate sufficient to keep the external system clean. Even if such processing could be carried out effectively and economically, failure of the processing system would lead to excessive radiation levels. This approach to the shielding problem is, therefore, very questionable.

The hazard associated with the fission products that escape due to leakage of coolant, or that can escape due to rupture of the system, can be reduced by continually processing a fraction of the gas stream for removal of iodine and other halides. The feasibility of doing this depends on the amount of halides in the gas stream, the rate of leakage of coolant from the system, and the efficiency of halide removal processes.

It is seen from the foregoing that the problems associated with contaminated coolant will depend primarily on the magnitude and type of fission products escaping from fuel elements. The first step in evaluating the various approaches, therefore, is to estimate the amounts of activity expected to be released from various types of fuel elements. Such estimates are presented in Section 3. This is followed by a discussion in Section 4 or methods of continuously removing noble gases, halides, and solids, respectively, from the gas stream and a discussion of the feasibility of continuous processing as a means of reducing the primary system shielding requirements or the hazards associated with the contaminated coolant. Maintenance techniques are discussed in Section 5, and costs of remote vs. direct maintenance are reviewed in Section 6. Finally, Section 7 presents results and conclusions, and Section 8 summarizes required research and development.

3. RELEASE OF FISSION PRODUCT ACTIVITY FROM CERAMIC FUEL ELEMENTS

The fissioning of U-235 or U-233 results in the formation of a large number of primary fission products with mass numbers ranging from 72 to 161[4]. Since most of the primary fission products are initially in a highly excited state, the nuclides undergo between one and six stages of radioactive decay until a stable state is reached. Due to this decay about 300 fission product isotopes of 37 different elements result from the fission process. It is this decay process in reaching the stable state that results in the large amount of beta and gamma activity associated with nuclear reactors. Operation of a reactor for only a few days results in an activity build-up of about 2.5 curies/watt, and subsequent operation will increase this activity level by a factor of 2 due to the build-up of the long-lived activity.

In order to evaluate the merits of ceramic fuel systems it is necessary to determine the effects of release of various fission products from the fuel element to the gas system on: (a) maintenance, (b) shielding, (c) the amount of allowable leakage from the primary system and containment shell, and (d) the over-all hazards associated with operation of the plant.

3.1 Properties of Important Fission Product Chains

Although it is theoretically possible to investigate the amount of activity from all of the 300 fission products previously mentioned, many of these products may be eliminated from a preliminary investigation of these systems by examining the many factors which determine the importance of the various nuclides which contribute to the total activity in the system external to the fuel element itself. Some of the more important factors are:

3.1.1 Fission Product Yield

Since the fission product yield may vary from about 6% down to amounts which are not detectable, those fission products with yields of less than 0.1% may be considered to be relatively unimportant.

3.1.2 Half-Life

Parent nuclides with very short half-lives will not contribute significantly to the important activity since the equilibrium concentration will be small, the time to diffuse out of the fuel will be large compared to the time to decay, and the activity after shutdown will decay rapidly. In addition, if there is leakage of these nuclides from the system, the time required to diffuse through the atmosphere and settle out on uncontrolled areas is sufficiently long to eliminate these nuclides from consideration.

3.1.3 Method of Disintegration

The fission products born in the fission process decay to more stable nuclides and result in the emission of beta particles and gamma photons. Since each nuclide will decay with a different decay scheme, the dose rates due to direct radiation or by ingestion will vary with each nuclide even if the number of curies is the same. Since this is the case, the consequences of a large amount of activity external to the fuel elements cannot be judged on a gross curie basis, but only by knowing the make-up of total activity. For shielding and maintenance it is important to know the number of photons of a given energy resulting from the nuclides. Since beta activity will not be important in considering the problems of maintenance and shielding, all the pure beta emitters may be neglected. The effects of inhalation of beta-emitting nuclides during maintenance should not be neglected. A study of the effects of leakage, on the other hand, can be limited to the nuclides that have low allowable concentrations in air or water.

3.1.4 Release Rate from Fuel

The release of fission products from the fuel material will depend, among other things, upon the diffusion coefficient of the particular element in the specific fuel material. One of the greatest uncertainties in determining the activity external to the fuel is in assigning a diffusion coefficient to a given element. Although it would be expected that all the fission product elements diffuse to some degree in a fuel material, only those with a high diffusion coefficient would release substantial amounts of activity to the coolant. Furthermore, since the release of a fission product by diffusion must compete with the decay process, the fraction which is released will be related to some function of D/λ where D is the diffusion coefficient in cm^2/sec, and λ is the decay constant in sec^{-1}. The diffusion coefficients for only a few fission products in but a few of the various proposed fuel materials have been measured; however, the existing data do support the assumption that only the elements which are gaseous or have a low melting point escape readily by diffusion. A further discussion of the factors affecting the release rate are discussed in Section 3.3.

3.1.5 Chemical Properties

The chemical properties of the various elements will affect the relative importance of the particular nuclide. The ability of the nuclide to form compounds while it is still in the fuel may prevent it from diffusing out of the fuel in the original form. Once the nuclide has diffused from the fuel the chemical properties of the nuclide will influence the ability of a clean-up system for removing the fission product from the gas stream. Chemical as well as physical properties may also influence the rate and nature of deposition, and will, therefore, influence both the shielding and the maintenance.

3.1.6 Important Fission Products

Using these factors as a basis, fission products in chains 84, 87-95, 129, and 131-143 are considered to be important in regard to the problems associated with ceramic fuels. If a fuel element is developed which is successful in retaining the short-lived nuclides and, therefore, only allows either the long-lived or stable elements to escape, the number of chains of interest will be greatly reduced. In regard to maintenance problems, important chains are:

Chain 90 33s Kr ⟶ 2.74m Rb ⟶ 28y Sr ⟶ 64.5h Y

Chain 91 9.8s Kr ⟶ 1.7m Rb / 14m Rb ⟶ 9.7h Sr ⟶ 40% 51m Y / 60% 58d Y ⟶

Chain 137 22s I ⟶ 3.9m Xe ⟶ 26.6y Cs ⟶ 2.6m Ba

Chain 140 16s Xe ⟶ 66s Cs ⟶ 12.8d Ba ⟶ 40.2h La.

If Sr^{90}, Ba^{140}, and Cs^{137} cannot be retained in the fuel, then the daughters of these nuclides which have energetic gamma photons will contribute to the problems of doing maintenance. Since the activities will not decay appreciably after shutdown (with the exception of Ba^{140}-La^{140} which takes about 100 days), methods of removing the parent or daughter must be found unless preferential deposition indicates that these nuclides will not deposit where maintenance is anticipated.

3.2 Discussion of Mechanism for Release

The release of fission products from unclad fuel is by one or all of the following processes: (a) solid state diffusion of fission products in the fuel lattice, (b) recoil of fission products from the fuel material, and (c) corrosion and/or erosion of fission products from the surfaces of the fuel material. Since in the gas-cooled reactor systems of interest (c) is unimportant, the controlling release mechanisms will be recoil and diffusion. The relative importance of these two mechanisms under various conditions is shown in Figure 1 (Figure 6.1 revised) taken from Ref. (1). It is seen from this figure that at UO_2 temperatures in the range of 1000°C to 1050°C the escape of fission products from the UO_2 by recoils is far more important than escape by diffusion. However, particles recoiling into the graphite must subsequently diffuse out of the graphite, with the net result that activity escaping by direct diffusion into the pores of the graphite (and thence to the gas coolant) constitutes about one-third of the total activity in the coolant for a reactor such as the HGCR-1.

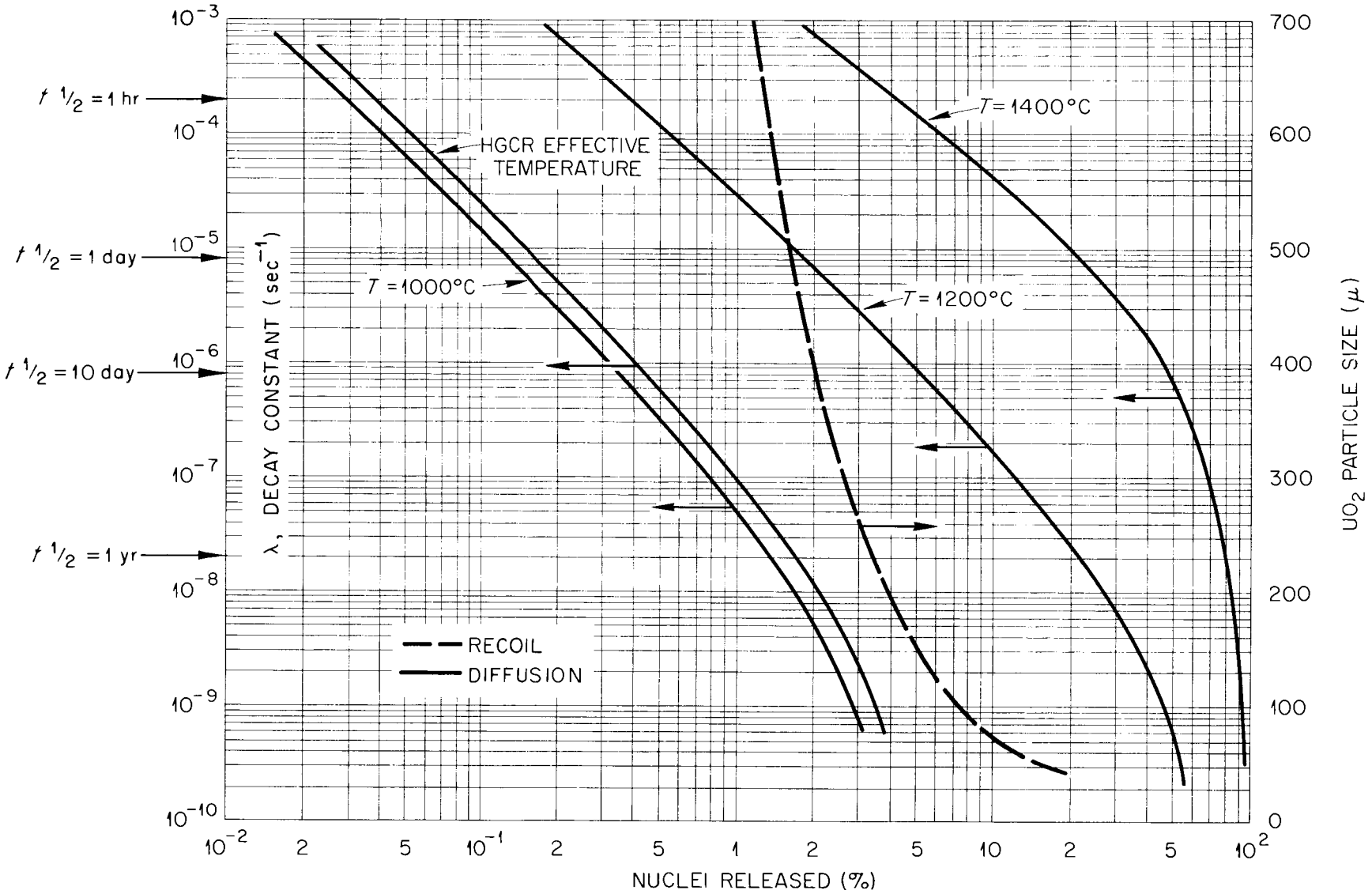

Fig.1. Nuclides Released from UO_2 by Diffusion and by Recoil.

3.2.1 Recoil Process

The energy of the fission fragments is sufficient to cause the fragments to recoil with ranges of the order of 5-8 mg/cm^2. Therefore, in material such as UO_2 the light nuclei will travel about 6.4×10^{-4} cm, whereas the heavy fragments will travel about 5×10^{-4} cm. The amount of activity escaping from the fuel will depend upon the method of fabrication. The fuel may be introduced into a matrix material such as graphite in particle sizes sufficient to reduce the recoil effect to a relatively small amount (with 200 micron diameter particles of UO_2 in graphite, only 3-5% of the nuclides recoil out of the UO_2).[1] The release of activity by recoil may be further reduced since the nuclides which recoil from the fuel may be captured in the matrix material (graphite, BeO, etc.), and release from this material will be by solid state diffusion. Surface coatings will also retain the fission products from the fissions which occur at the geometric surface of the fuel material.

3.2.2 Diffusion Process

The largest amount of fission product release involves the process of solid state diffusion of the various nuclides, whether through the fuel lattice or, in the case of recoil particles, diffusion through the matrix lattice. The release of the fission products by diffusion is a combination of diffusion within the crystal lattice followed by relatively rapid diffusion in the open porosity. The rate-controlling process is the diffusion in the lattice, and experiments have shown that the time to diffuse out of the porosity is small in comparison.[5] The possibility of fabricating fuels with "impermeable coatings" may present a further barrier to the release of fission products. The rate of diffusion of fission products through this barrier, if effective, would be similar to the diffusion in the fuel lattice. If the retention of the long-lived gaseous fission products limits fuel life-time due to pressure build-up, the coatings which may be preferred would be those which were effective in containing all the short-lived fission products and allowing only the stable or long-lived gases to escape.

3.3 Factors Affecting the Release Rate

The rate of release of fission products from a given type of fuel element is difficult to predict with accuracy because the release is affected by many variables. These variables include the type of fuel, its method of manufacture and purity, the geometry of the fuel element, the type of matrix material, the temperature, and the equilibria which exist between the fuel and matrix materials and the individual fission products. Limited information is available about how these variables affect the rate of release of xenon and krypton from UO_2, but almost no data are available on other fission products or other fuel materials. Even in the case of

UO_2, unexplained discrepancies in the data of different investigators prevent one from making accurate predictions of the rate of fission gas release. Such discrepancies are illustrated in Figure 2 which shows the range of values of the diffusion coefficients of xenon and krypton in UO_2 that have been reported by different investigators. With the present uncertainties, proof-testing of a prototype fuel element under simulated reactor conditions is the most reliable method of determining the rate of fission product release. Since such data are lacking for the specific fuel elements being considered in the present study, rough estimates of the rate of fission gas release will have to be used.

Although the rate of release of fission products cannot be calculated accurately, many general relationships between the rate of release and the controlling variables are known and can be used by the fuel element designer to minimize the rate of release. These relationships will be discussed in the following paragraphs.

3.3.1 Fuel, Matrix, and Coating Materials

The economics of a gas-cooled power reactor with a contaminated coolant are such that the fuel element of such a reactor is likely to operate with a surface temperature in excess of 1000°C. At these temperatures the fuel must be in the form of a refractory compound such as the oxide or carbide. The fuel may be in bulk form or it may be in the form of particles dispersed in a matrix of graphite or of ceramic oxides. In either case an outer coating of some low permeability material such as impregnated graphite will probably surround the fuel body. This coating serves two functions: it serves as a diffusion barrier; it stops the recoils before they enter the coolant.

Results to date on the irradiation behavior of UO_2[6,7,8] and preliminary data on UC[9] have shown that these materials do not swell under irradiation at high temperatures like metallic fuels, and that the rate of fission gas release from bulk UO_2 fuel bodies is small except at temperatures in excess of 1600°C. The data on UO_2 indicate that the release occurs by a diffusion mechanism. All of the release of fission products from UC could be accounted for by recoils at the highest temperature at which it was tested (1000°C). Data currently available on the rates of fission product release from other fissile-bearing compounds are quite limited.

Unfortunately, UO_2 and UC are subject to cracking due to thermal stresses when irradiated in bulk form at normal heat fluxes. UO_2 also has a very low thermal conductivity so that central temperatures are high under reactor conditions. Because of these undesirable properties, UO_2 and UC particles dispersed in a matrix of graphite are preferred over bulk materials by the designers of the HGCR-1, the GA-HTGCR, and the PBR. Ordinary AGOT graphite, which has been suggested as the matrix, is quite porous, and fission products which diffuse out of the surface of the fuel particles penetrate the matrix rapidly. Fission product recoils, however, are imbedded in the graphite lattice and must subsequently diffuse to open porosity before their escape. Cottrell, et al.,[1] have computed approximate diffusion coefficients for

UNCLASSIFIED
ORNL-LR-DWG 40731R

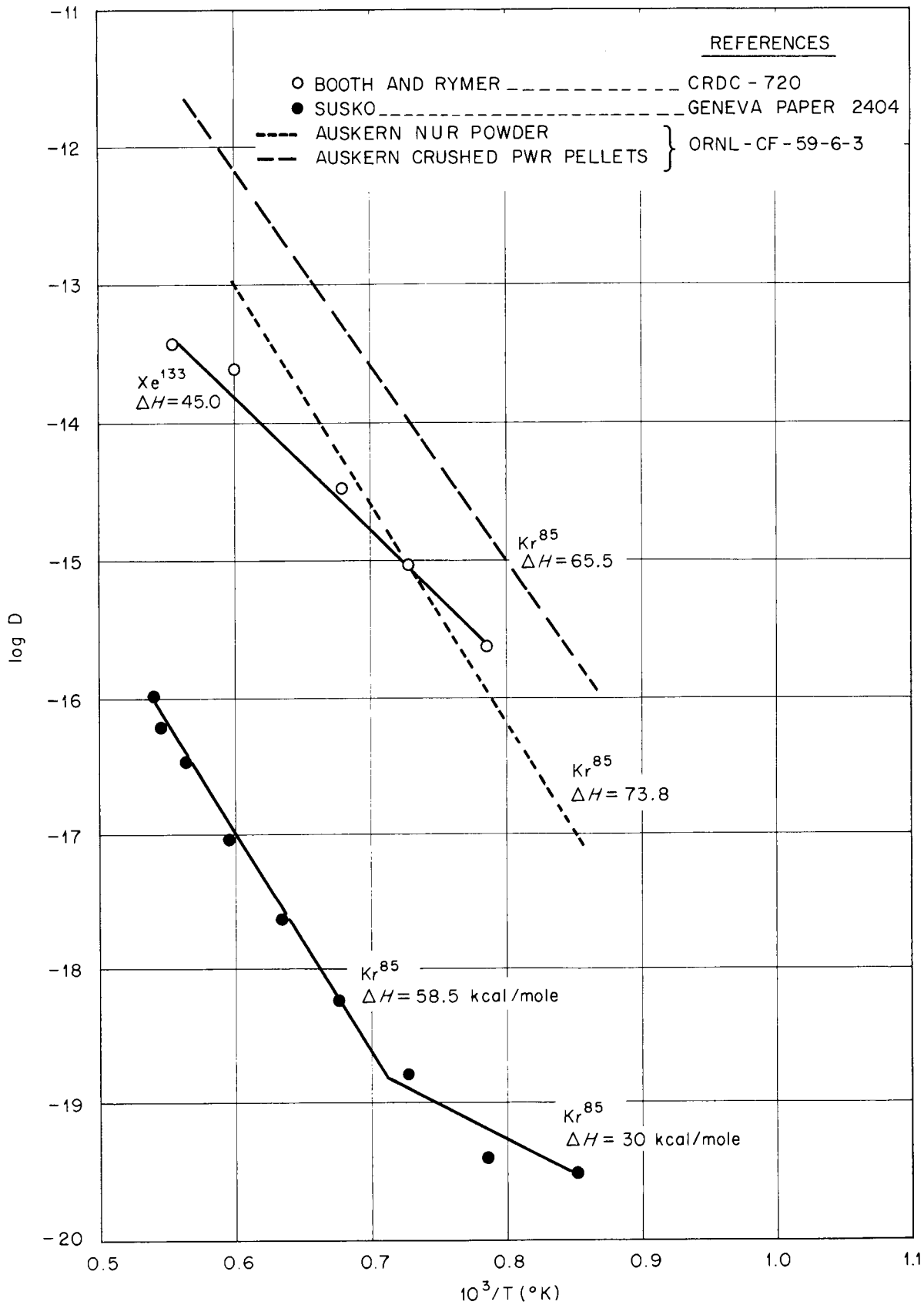

Fig. 2. Diffusion Coefficients for Xenon and Krypton in UO_2

fission products out of AGOT graphite from the data in Refs. (5) and (10-13). These coefficients may be used to compute approximate release rates for fission products out of AGOT graphite.

The ratio of the release of activity from the fuel by recoil to that by diffusion from the fuel depends on both the diffusion process which is temperature dependent and the particle size of the fuel, which in turn depends on the method of fabrication. Impregnation of the graphite with uranyl nitrate and subsequent heat treatment to reduce the nitrate to the dioxide is the least expensive way to disperse uranium in graphite, but the fine particle size which results permits the escape of a large fraction of the fission products by recoil. Coarse dispersions of UO_2 and UC in graphite, though more expensive to fabricate, show a much lower rate of release.(14) For bulk fuels the density, total surface area, and ratio of open to closed porosity, all of which affect the rate of release of fission products, are governed by the method of fabrication.

The use of low-permeability graphite for the fuel matrix may materially reduce the rate of release of fission products to the coolant if the rate-controlling process is diffusion through the pores, rather than diffusion from the lattice. Graphites with permeabilities a factor of 10^6 lower than that of AGOT graphite have been prepared on a laboratory scale, and factors of 10^8 may eventually be achieved.(15) If such a capsule is incorporated in the fuel element, the rate of release will be markedly affected by the rate at which the fission products move through the pores of the capsule by gaseous diffusion. It is possible that only the long-lived isotopes will reach the coolant before they decay. Such a capsule may have some advantage over a completely impervious coating such as SiC since the pressure within the fuel would be relieved by the escape of the long-lived isotopes.

The chemical equilibria between the fission products and the fuel and matrix materials should be considered when one is estimating the rate of release. In UO_2, for instance, fission products which form refractory oxides would be expected to be well retained in the lattice, and fission products such as molybdenum which form a volatile oxide would be expected to have a high mobility in the oxide lattice. Inert gases probably diffuse rapidly through the lattice. The mobility of anions such as bromine should be related to the volatility of the corresponding uranium compound. For carbide fuels and graphite, strong carbide formers are probably well retained within the lattice.

3.3.2 Temperatures

As the temperature increases, the rate of fission product release by diffusion would be expected to increase markedly. The activation energy for the diffusion of krypton in UO_2 has been reported by Auskern(16) to be 60-65 kcal, and the activation energy for the diffusion of xenon in UO_2 was reported by Booth and Rymer(17) to be 45 kcal. Few data have been reported for other volatile fission products. Morgan,(16) at Chalk River,

has reported that essentially all of the volatile fission products escape from UO_2 when grain growth and sintering are observed; i.e., above 1600°C. Since grain growth and sintering also occur by a diffusion mechanism, one is not surprised to find a connection between fission gas release and grain growth. At higher temperatures, where reduction of UO_2 to UC occurs, fission products may be released at a higher rate. The temperature at which sintering occurs in uranium carbide is above 2000°C compared to 1600°C-1900°C for UO_2, so that the diffusion coefficients for fission products in uranium carbide are probably lower than in UO_2. All present evidence indicates that above the melting point of the fuel all of the volatile fission products are released.

3.3.3 Temperature Distribution

Because of the increased rate of release at increased temperatures, the temperature distribution in the fuel element must be adjusted so that high central temperatures are avoided. The temperature distribution is controlled by the heat generation rate, the cooling rate, the geometry, the thermal conductivities of the components, and the distribution of components in the element. Since a high heat generation rate is desired, one must optimize the other variables toward this end while maintaining a favorable temperature distribution. The cooling rate is dependent on the type of coolant, the temperature of the coolant, the coolant flow rate, and the surface area of the fuel element. The geometry and thermal conductivity must be considered simultaneously, for thin sections of a low thermal conductivity material must be used if the central temperature is not to be excessive. In a dispersion-type element the distribution of the fuel and matrix materials in the fuel element may be controlled so that low thermal conductivity materials such as UO_2 will be surrounded by matrixes of higher thermal conductivity such as graphite or BeO.

The purity of the fuel must also be considered when one is trying to design for a favorable temperature distribution. A high O/U ratio in UO_2, for instance, results in a decreased thermal conductivity, thus increasing the central temperature of a given-size body. The higher temperature then results in a higher rate of fission gas release. There may also be a relationship between the O/U ratio and the mobilities of the various fission products, but present data are insufficient to permit a separation of the temperature effect from the possible increased mobility effect.

3.3.4 Particle Size

The particle size of the fuel material is extremely important in governing the rate of fission gas release. As the particle size decreases, not only does the fraction released by recoils increase, but also the fraction released by diffusion increases. Booth and Rymer[17] showed that the percentage of xenon released from UO_2 in 3 hours at 1400°C by diffusion varied inversely with the powder radius. These results are shown in Figure 3. Thus, coarse particles are desired to reduce the rate of fission gas release.

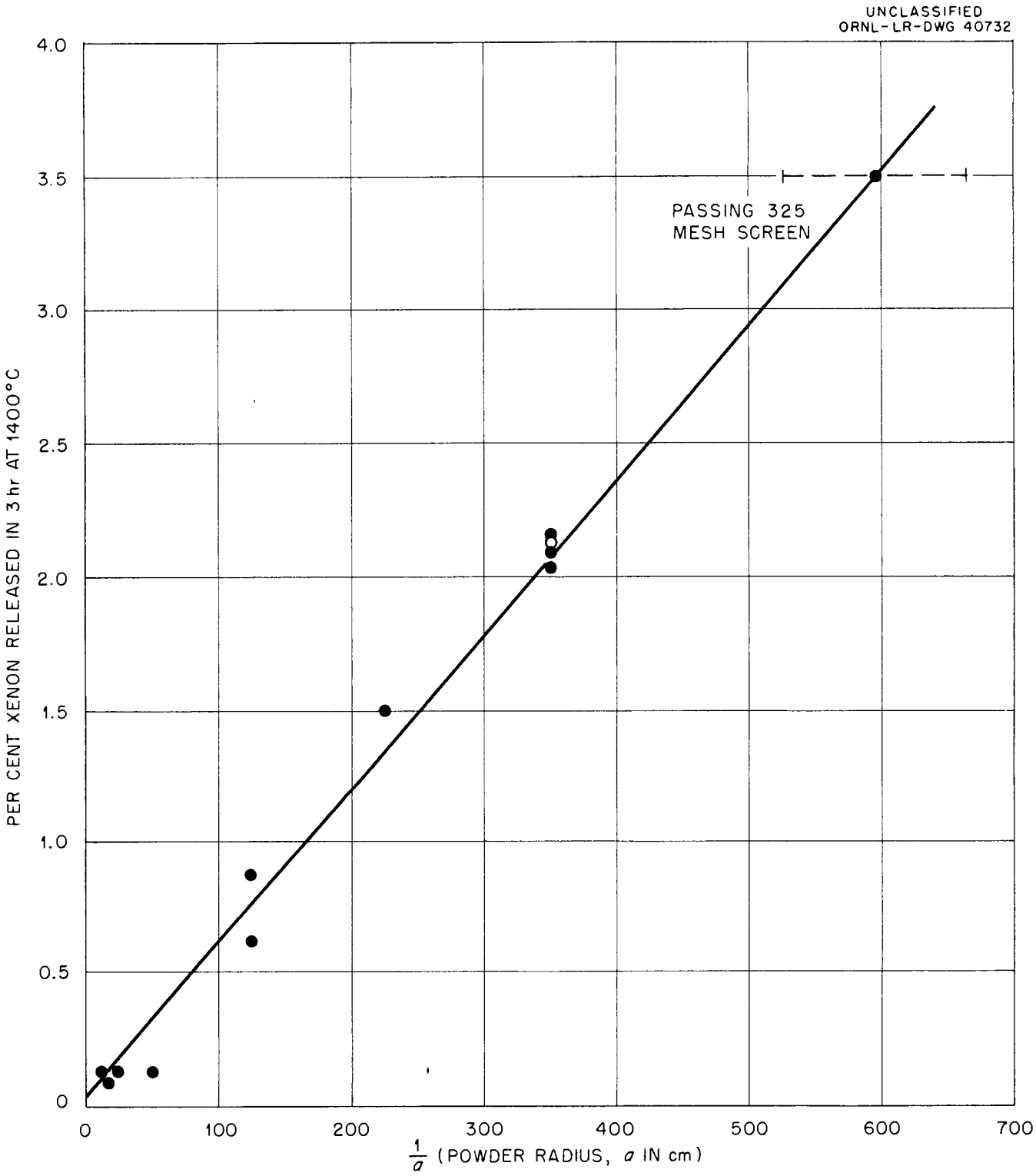

Fig. 3. Release of Xe^{133} from Fused UO_2 as a Function of Powder Radius.

3.3.5 Properties of Bulk Fuels

From the above discussion one would expect that fission gas release by diffusion is not a problem for bulk fuel materials. This would indeed be the case for materials of theoretical density, but ceramic fuel bodies of theoretical density are very expensive to produce. For materials with lower than theoretical densities the governing criterion for the rate of release other than temperature is the surface area exposed by open porosity. Booth[18] has shown, for instance, that the fraction of xenon and krypton released by diffusion from a fuel body undergoing fissioning is given approximately by the equation:

$$F = \frac{4}{a}\sqrt{\frac{Dt}{\pi}} \quad . \qquad (1)$$

In this expression

F = the fraction of fission gas released,

a = the radius of the spheres which are assumed to represent the material, cm,

D = the diffusion coefficient of the particular isotope in question, cm^2/sec,

t = the time at temperature in-pile, sec.

Eichenberg, et al.,[6] showed that the radius of the equivalent sphere a may be taken as:

$$a = \frac{3d}{s} \quad , \qquad (2)$$

where

d = the fraction of the theoretical density,

s = the total surface area per unit volume of the material, cm^2/cm^3.

Combining Equations (1) and (2), the fraction of the fission gas released is:

$$F = \frac{4s}{3d}\sqrt{\frac{Dt}{\pi}} \quad . \qquad (3)$$

Thus, the fraction released is proportional to the total surface area and inversely proportional to the fraction of theoretical density.

3.3.6 Properties of the Coolant

The coolant gas must be compatible with the components of the fuel and moderator, and must have good heat transfer characteristics. Certain gases, particularly those containing argon, may seriously contribute to the overall activity of the coolant system. The advantages and disadvantages of various gas coolants in a high-temperature reactor have previously been discussed.[19] From all available evidence, helium is the likely choice for a coolant for a high-temperature gas-cooled reactor regardless of the release of fission products from the fuel.

3.4 Radioactivity Release to the Coolant of Specific Reactors

The amount of activity in the coolant of a gas-cooled reactor using unclad fuel will depend upon the design of the fuel elements, the temperature of operation of the reactor, and the power density in the fuel material. Since the activity build-up in the fuel soon after start-up will attain a level of about 2.5 curies/watt,[4] the total activity being released from the fuel elements into the coolant may be expressed as:

$$A = (2.5)\ P\ F\ , \qquad (4)$$

where

P = power in watts,

F = fractional release of activity.

Since the total curies of activity being released to the coolant is not a number of great significance, and it cannot be used to characterize a system, it is necessary to know the contributions of the many elements to the total activity.

An extensive study of the release of activity from unclad fuel has recently been made at ORNL[1] in connection with the HGCR-1. The results of this study, which are discussed in some detail below, provide a basis for estimating the activity release in similar systems such as the PBR.

3.4.1 The High-Temperature Gas-Cooled Reactor, HGCR-1

In an attempt to achieve high-temperature operation, the HGCR-1 uses for the fuel, plates of graphite with 200-micron diameter particles of UO_2 dispersed in the graphite. Although the heat flux in the fuel is about 245,000 Btu/hr(sq ft), the maximum temperature in the fuel plates is only 2095°F since the thermal conductivity of the fuel matrix is much higher than the fuel particles themselves, and since the plates are only about 3/8 in. thick. The power output from this reactor is 3095 Mwt so that after relatively short periods of operation there will be about 8×10^9 curies in the system, and this will level off at about 2×10^{10} curies for long-time operation.

The analysis of the release of hard gamma (i.e., > 0.5 Mev) and other* fission products from the HGCR-1 fuel results in the activities shown in Table I. The fractional release of activity for the nuclides of greatest interest indicates that the release will vary up to 11.3% for Ba^{137m}. The table illustrates the importance of half-life since the short-lived nuclides do not escape as readily. A close examination of Table I further indicates that half-life of the nuclide of interest is not the most predominant factor in the escape of activity, but that it is necessary to examine the chains since precursor nuclides with long half-lives may escape readily and then decay to nuclides of shorter half-life (e.g., Ba^{137m}, Y^{90}). The relative importance of escape by diffusion out of UO_2 compared to recoils into, and diffusion out of, graphite is also shown in Table I for each of the nuclides.

Although the select list of nuclides tabulated does not represent all the activity generated in the fuel (i.e., only 32 of about 300 nuclides are listed), since the total activity is about 2×10^{10} curies, the nuclides tabulated represent 20% of the total activity. Since the other activity is beta or low gamma energy nuclides, these will not materially alter any of the conclusions one would arrive at, especially since a large fraction of this activity would be contained in the fuel either due to the extremely low diffusion coefficient or small half-life.

It is of interest to look at the results of the HGCR-1 study in relation to the assumptions made in arriving at the results, and also to point out many of the uncertainties associated with such a study, and how the results are altered by the assumptions and uncertainties.

3.4.2 Assumptions and Uncertainties in HGCR-1 Study

The basis for the calculation of activity in the coolant was that: (a) fission products escape from the UO_2 by solid-state diffusion in the UO_2 lattice and that a fission product which had entered the open porosity of the UO_2 would then very rapidly diffuse to the coolant stream; and (b) fission products would recoil from the UO_2, become embedded in the graphite lattice, diffuse out of the graphite lattice into the open porosity of the graphite, and would then rapidly diffuse to the coolant; and (c) the activity of a given isotope in the coolant will result from direct diffusion and decay of precursors. Although a layer of graphite was specified for the fuel to prevent fission products from recoiling directly into the coolant, it was assumed that this coating of graphite did not in any way represent a barrier to the fission product escape by diffusion. These basic assumptions in the process for activity escape do not in themselves represent areas of great uncertainties, but in the calculation of the release of activity by the two processes there are several factors of great interest.

---

* Kr^{85}, Sr^{90}, Cs^{137}.

Table I

Activity Release from UO_2-Graphite Fuel
HGCR-1 Study

Nuclide	Half-Life	Activity Generated in Fuel, curies	* Activity in Gas from Diffusion Out of Graphite (of recoils out of UO_2), curies	Activity in Gas from Diffusion Out of UO_2, curies
Br-84	30m	0.29×10^8	0.12×10^5	0.09×10^5
Kr-85	10.3y	0.04	1.80	1.20
Kr-87	78m	0.70	0.92	0.37
Kr-88	2.77h	0.96	1.82	0.58
Rb-88	17.8m	0.96	2.09	0.76
Rb-89	15.4m	1.24	0.85	0.30
Sr-90	28y	0.12	6.50	-
Y-90	64.5h	0.12	6.57	0.17
Sr-91	9.7h	1.53	6.10	0.24
Y-91m	51m	0.62	2.08	0.10
Y-91	58d	1.53	7.73	0.24
Y-92	3.6h	1.58	2.82	0.88
Y-93	10h	1.68	0.69	0.01
Y-94	16.5m	1.68	0.31	-
Zr-95	63d	1.66	0.02	-
Nb-95	35d	1.66	0.02	-
I-131	8.05d	0.75	0.05	3.75
I-132	2.4h	1.14	0.10	0.60
I-133	20.8h	1.68	0.05	2.91
I-134	52.5m	1.97	0.02	5.84
I-135	6.68h	1.53	-	1.33
Xe-135	9.13h	1.61	3.86	2.78
Xe-135m	15.6m	0.47	0.23	0.46
I-136	86s	0.80	-	0.42
Cs-137	26.6y	0.15	5.59	11.60
Ba-137m	2.6m	0.14	5.14	10.70
Cs-138	32m	1.50	2.16	0.57
Ba-139	85m	1.55	1.28	0.26
Ba-140	12.8d	1.63	6.47	0.09
La-140	40.2h	1.63	6.47	0.09
La-141	3.7h	1.55	2.67	0.14
La-142	74m	1.53	2.66	0.17
Total		3.60×10^9	7.72×10^6	4.67×10^6

* Hard gamma emitters plus Kr^{85}, Sr^{90}, and Cs^{137}

3.4.3 Diffusion from the UO_2

The diffusion of fission products from the UO_2 is based on the following assumptions:

1. The diffusion coefficient for the fission products xenon, krypton, cesium, bromine, iodine, and rubidium are the same. The diffusion coefficient used for the study was the diffusion coefficient of krypton given in Ref. (6) and shown in Figure 4.

2. The value of the hypothetical sphere a was based on the density vs. surface area curve given in Ref. (6). This resulted in a value of about 10^{-3} cm.

3. The D/a^2 value at 1400°C which results from assumptions 1 and 2 was 4.54×10^{-8}, and the activation energy was 115 kcal/mol above 1000°C and 850 cal/mol below 1000°C.

Values of D and D', where $D' = D/a^2$, based on these assumptions are shown in Figure 4, and are compared to D and D' values based on more recent data.(16) A comparison of the D values in Figure 4 indicates that the D values used in the HGCR-1 calculation were low for temperatures in excess of 850°C, and for temperatures below 850°C the D values are much too high. However, in comparing the D' values, in all cases the D' values used are greater than an order of magnitude too high. Since the fractional release may be approximated by a function of $\sqrt{D'}$, the fraction of fission products released from the UO_2 by diffusion would be less than predicted by a factor of 4 or greater, depending on the temperature of the fuel. In the case of the HGCR-1 about 92% of the fuel is at a temperature below 1000°C, and at the lower temperatures the fractional release based on the more recent data would be less by a factor greater than 4.

In the HGCR-1 study the amount of activity released from the UO_2 by diffusion was about 3.5×10^6 curies or about 35% of the total activity release. Therefore, the decrease in the activity by diffusion from the UO_2 is only significant if similar reductions are possible due to the recoil and graphite diffusion mechanism.

The assumption that xenon, krypton, iodine, bromine, cesium, and rubidium diffuse from the UO_2 at the same rate is certainly a conservative assumption which was necessary for the HGCR-1 study due to the lack of any diffusion data on nuclides other than xenon and krypton. However, this assumption probably overestimates the amount of these nuclides which enter the gas stream, particularly in the case of the lower temperatures.

3.4.4 Diffusion from the Graphite

The diffusion of fission products from the graphite is based on the following assumptions:

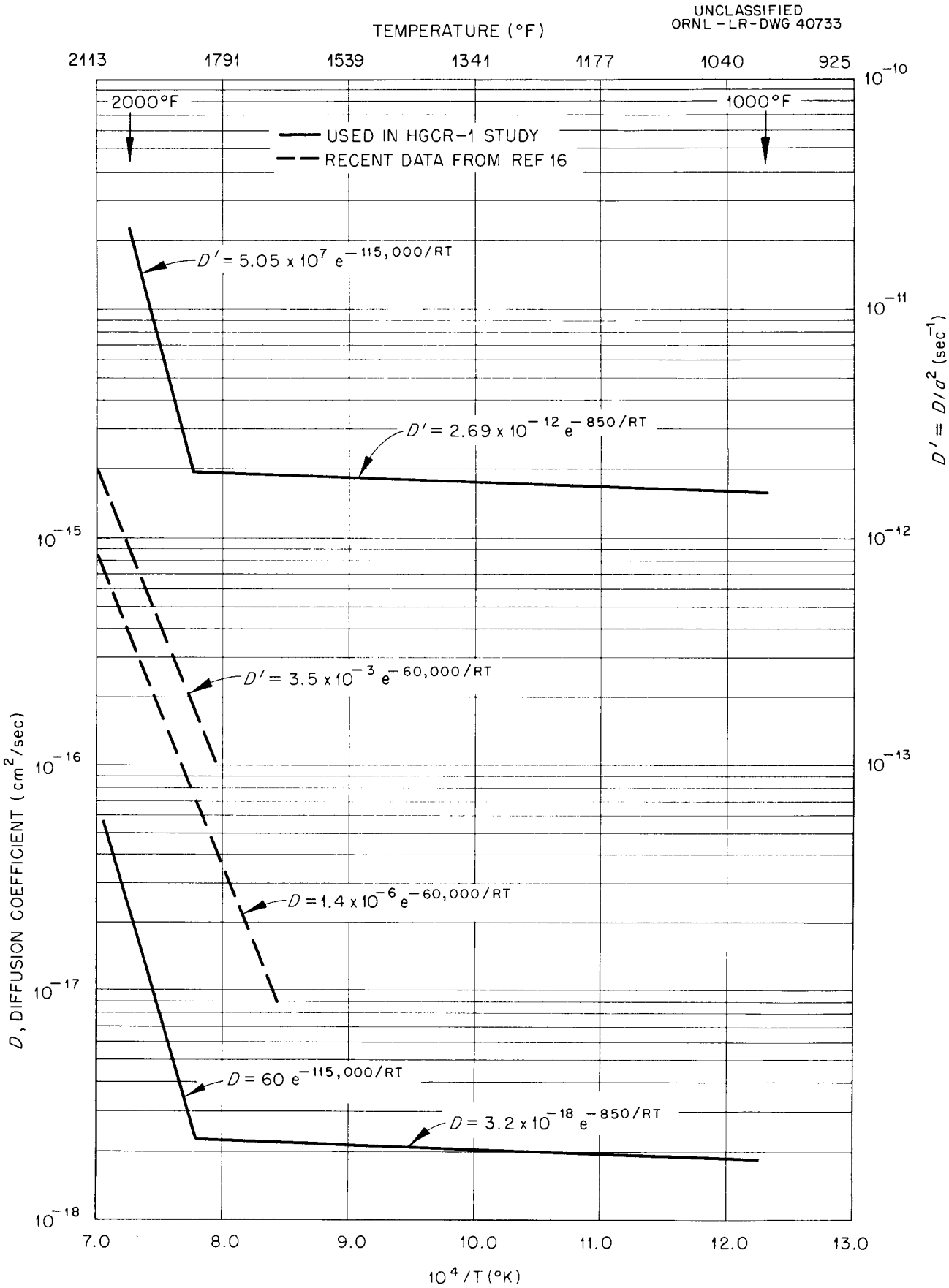

Fig. 4. Diffusion Coefficients for Kr in UO_2.

1. The diffusion model for the fission product diffusion in graphite is the same as in UO_2 (diffusion through the pores is not rate-controlling).

2. The activation energy for the diffusion of the various elements in graphite remains constant. Therefore, the curve of diffusion coefficients obtained from experiments at high temperature may be extrapolated to the lower temperatures.

3. The surface area of the graphite is 0.5 m^2/gm which results in a value of $a = 2.4 \times 10^{-4}$ cm.

These assumptions are somewhat more difficult to evaluate since little work has been done on the diffusion of fission products in graphite. The diffusion coefficients for cesium, bromine, iodine, strontium, xenon, barium, tellurium, and yttrium were calculated based on data from experiments of fission gas release from impregnated graphite. The diffusion coefficients which were obtained all have similar activation energies of about 60 kcal/mol, but vary in the absolute amount at a given temperature. It is of interest to note that such elements as cesium, bromine, and strontium tend to diffuse more readily from the graphite than does xenon. Although the D values for the various nuclides were obtained at temperatures in excess of the proposed fuel element temperatures, the data were used by extrapolating D values to the temperatures of interest. In the calculation, however, all the fuel below 1600°F was assumed to be at 1600°F so that in effect the D values at 1600°F or below remained constant. This would overpredict the amount of fission products in the gas stream by a relatively small factor (i.e., < 2).

The value used for a was determined based on the properties of AGOT graphite. It is difficult to estimate the effect on the a values of using a more impervious type of graphite. Graphites with a permeability much less than the graphite assumed in the HGCR-1 study could possibly have a values which are greater than the value used in the HGCR-1 study, and, furthermore, an additional barrier due to resistance between the pores could decrease the amounts of fission product escaping to the coolant.

3.5 The Pebble Bed Reactor (PBR)

The activity release from the fuel in the PBR will depend upon the final choice of fuel. The three types of fuel now being considered are the impregnated ball, the admixture-type ball, and the lumped ball of UO_2 with a graphite layer on the outside. The activity release from the PBR[3,20] is analyzed in a manner similar to the HGCR-1. Since the diffusion coefficients for the fission products in graphite are identical to those used in the HGCR-1 study, the results obtained in this study are comparable to those discussed for the HGCR-1. The activity level in the coolant of the PBR will, therefore, be similar in make-up to that given in Table I for the HGCR-1, but the total amount of curies of each of the nuclides will be somewhat different due to the power level and temperature

structure in the fuel. The power output from the PBR is 337 Mwt, and the fuel temperatures are 2170°F maximum surface temperature and 2440°F maximum center temperature. Therefore, although the power output is a factor of 9 less than the HGCR-1, the temperature structure is sufficiently higher so that the activity release will be about comparable to the HGCR-1. A detailed analysis of the PBR indicates that the activity released to the coolant is about 10^7 curies, and that about 58% of this activity would be in the gases and the remainder in solids.[20]

The relative amount of activity which will be released from a PBR-type reactor will depend upon the final choice of the fuel type. An estimate of the amount of activity released from the impregnated fuel, the admixture-type fuel, and the lumped fuel with permeable coating is estimated in Table II, taken from the HGCR-1 study.

Table II

Comparison of Activity Released from Various Types of Fuels

With the Same Temperature Structure

Method of Fabrication	Diffusion of Activity from UO_2, curies	Diffusion of Recoil Activity from Graphite, curies	Total Activity Released, curies
Impregnation	1.2×10^6	97.6×10^6	98.8×10^6
Admixture*	3.45×10^6	6.1×10^6	9.55×10^6
UO_2 clad with graphite	3.45×10^6	~ 0	3.45×10^6

* Assumes 200-micron-diameter UO_2 particles in dispersed graphite.

Recent tests conducted for the Sanderson & Porter Company[14] at Battelle Memorial Institute give preliminary information concerning the relative amounts of fission gas release from the impregnated- and admixture-type fuels. Based on the preliminary findings, which by their nature involve many uncertainties, D' values for Xe^{133} from the impregnated fuel and the admixture-type fuel have activation energies of about 8.3 and 18.6 kcal/mol, respectively. This compares to the value of 27.6 kcal/mol derived from the HGCR-1 study. The results obtained at BMI also indicate that the D' values for the impregnated fuel are about one to two orders of magnitude higher than for the admixture-type fuel. Since the amount of Xe^{133} released is a function of $\sqrt{D'}$, the amount

of activity released from the impregnated fuel is, therefore, between 3-10 times greater. Since the ratio of the activity to be expected from the various types of fuel will depend upon the size of the particle, and since the admixture-type fuel had a UO_2 particle size of 100-150 micron diameter, the results seem to compare well with Table II. The tests on the lumped balls did not yield much activity, and this is best explained by the low temperature of the experiments. At higher temperature (> 2000°F) the activity could be as predicted in Table II.

3.6 The High-Temperature Gas-Cooled Reactor (HTGCR)

In the HTGCR the fuel and moderator are mixed and the cladding material is eliminated. The approach is not to attempt containment of fission products within the fuel elements, but to control their escape in a manner to avoid the undesirable consequence of their release to the primary coolant. The intention is to remove solids and short-lived rare gases by time-delay and trapping, and to provide for a shielding and leak-tightness standard in the primary circuit adequate to live with the remaining long-lived rare gas isotopes. The trapping and delay system proposed by GA incorporates a double graphite containment of the fuel compacts, with interspaces continuously scavenged by part of the coolant which is subsequently returned to the primary coolant through an external trapping system.

The success of such an arrangement will depend upon the ability of the outer graphite sleeve to retain the fission products and of the trapping system for collecting the activity that escapes from the central matrix region. If it is assumed that the development program outlined by GA is successful, then the amount of activity being circulated in the gas stream will be limited to the gases xenon and krypton. The activity which will then be most dominant will be Kr^{85}. The amount of activity due to the build-up of Kr^{85} will be limited by the amount of leakage from the primary system and will be about 3.5×10^4 curies.[21] This activity will present no real problems due to leakage from the system, and will likewise present no difficulty to the maintenance problems.

It should be pointed out, however, that even if the system is designed and operated as proposed, there will be methods of introducing activity to the coolant. Included would be: (a) mechanical failure of a fuel element, (b) back diffusion through the outer graphite barrier, (c) mechanical failure of the trapping system, and (d) activity passing through the trapping system.

Until more information is available about the design of both the fuel element and the trapping system, it is impossible to know how much activity will be in the coolant, although it would be expected that the activity level would be substantially less than for the HGCR-1 and the PBR.

4. CHEMICAL PROCESSING OF CONTAMINATED GAS COOLANTS

It is seen from the previous section that as much as 10^7 curies of radioactive fission products may diffuse out of the fuel elements proposed for the HGCR-1, and greater or lesser amounts out of other types of ceramic fuels. The primary coolant system design will have to accommodate the problems created by the release of this radioactivity, or, alternately, the coolant must be processed to remove its radioactive contaminants. The following section discusses the feasibility of applying this latter approach as a means of alleviating the primary system shielding requirements, the equipment maintenance problems, and the potential hazard associated with escape of coolant to the surroundings.

4.1 Fission Product Removal Processes

Detailed information concerning the levels of activity of the individual fission products that will escape into the gas stream has been given previously. For the purpose of considering various methods of removing these fission products, they may be divided into three general categories: solids, halogens, and noble gases. The division is an arbitrary one to fit the proposed probable processing schemes that might prove to be adaptable to the continuous decontamination of the circulating coolant. The amounts of material to be handled in each category for a reactor such as the HGCR-1 are shown in Figure 5.

4.1.1 Solids

Individual atoms diffusing out of fuel may be borne away in the coolant streams as atoms until they come close to other particulates with which they join to form agglomerates; or small particles passing close to a wall may adhere to the wall, forming a deposit. The formation of deposits or agglomerates is a phenomenon observed in aqueous and gas suspensions of small solids, and although the mechanics have not been studied exhaustively, certain qualitative assumptions appear to agree with the observed behavior.[22]

Small particles (< 1 micron) deposit or agglomerate much more rapidly than larger ones (> 10 microns). The driving force of deposition or agglomeration may well be the surface activity of the particles affected, and the surface activity of particles can be shown mathematically to vary with the reciprocal of the cube of the diameter.

Deposition or agglomeration appears to take place at a rate that is dependent upon the probability that a particle will pass in proximity to a surface or another particle. This probability for deposition is believed to be roughly proportional to the surface-to-volume ratio of the environment; and for agglomeration, the probability may be some power function of the concentration of agglomerating particles. Thus, it is reasoned that solid

UNCLASSIFIED
ORNL-LR-DWG 40734R

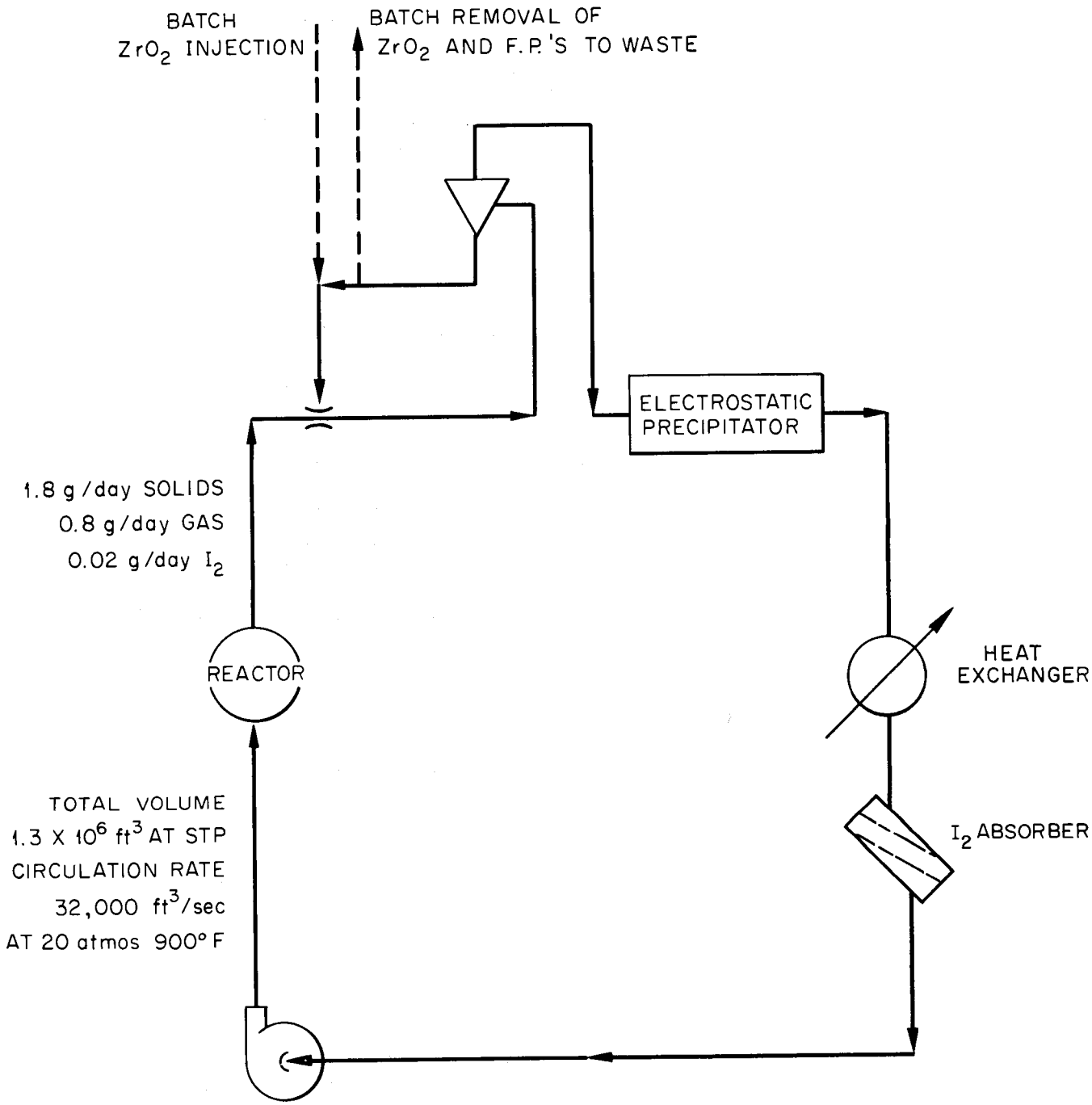

Fig. 5. Schematic Flowsheet HGCR-1 – Coolant Processing.

particles will predominantly deposit upon the walls of the environmental system if of dilute concentration, but will tend to agglomerate if their number per unit volume is high. (The absolute amount of deposited activity may in this latter case also be high.) If a great number of relatively large (and therefore nondepositing) solids are carried in suspension along with small particles, the small particles could be expected to deposit upon the larger solids rather than upon the container walls, and roughly in proportion to the relative surface areas presented. Thus, the removal of fine particulates might be effected by the deliberate suspension of a high concentration of scavenger solids;[49] these, along with their deposits of particulates, later to be removed by one of the classical solids-gas separations techniques. Such a process is shown schematically in Figure 5.

Agglomeration of small particulates may be sufficiently rapid that they may respond to electrostatic precipitation. Smoke fumes are known to agglomerate quite rapidly to form particles in the order of 0.1 micron, which are removable by efficient electrostatic precipitation. Unfortunately, ionizing radiation may discharge particles before they can precipitate, although electrostatic precipitators were in successful use for a number of years for removing the particulate activity from the off-gas of the RaLa process ($Ba\text{-}La^{140}$ production) at ORNL. The classical methods of solids removal, filtration, cyclone separation and electrostatic precipitation, are probably not applicable to the removal of low concentrations of fine particulates from a high-temperature, high-velocity gas stream. The equipment for all these methods is very large and would have to be shielded and contained. The coolant inventory would be greatly increased (doubled for electrostatic precipitation to provide 99.9% solids removal from the entire HGCR-1 helium coolant stream).[48] The processing equipment would be a heat sink and would allow large radiant heat losses. Maintenance of equipment would be extremely difficult (especially if the equipment were effective in fission product collection).

The applicability of a packed bed as a means of providing a large surface area for the preferential deposition of solids cannot be evaluated without more information on the mechanics of particle formation and deposition. If the deposition per unit area is uniform, such an approach is probably not feasible since 1000 times the total equipment surface area would have to be provided to achieve a satisfactory decontamination factor.

4.1.2 Halogens

Iodine is a potentially serious physiological hazard by virtue of its rapid absorption into the body organs, and its retention in the reactor system is highly desirable. Fortunately, iodine is extremely active chemically and reacts promptly with silver compounds to form stable AgI.[23] Experience with the silver fixation of iodine in the Idaho Chemical Processing Plant off-gas plant is limited to low flow rates (about 30 lb/hr(sq ft)). At these low flow rates the bed volumes required for a 3000 Mw reactor become incommensurately large, in the order of 3×10^9 cu ft. At higher

flow rates the efficiency of the bed is unknown. If it is assumed that high bed efficiency is not required, that an individual atom of iodine can be allowed to circulate through the reactor loop several times before being absorbed, high mass flows can be used, and a much smaller bed is adequate.

If it is assumed that the iodine absorber is regenerated every two weeks, a bed volume of 50 cu ft would suffice to remove iodine for this period of time at the same rate that it is being produced. If a 25 psi pressure drop is assumed, the maximum allowable bed depth is about 6 in. and the required bed cross-sectional area is about 100 sq ft for each of 8 beds in parallel.

It should be pointed out that iodine will not be removed from the circulating stream but only fixed as AgI, so that it does not contribute to the potential physiological hazard should a major rupture in the coolant stream occur. Decay products of iodine will not be fixed and will re-enter the circulating stream.

4.1.3 Noble Gases

The noble gases xenon and krypton are so inert chemically that their separation is difficult. Fortunately, none of the noble gases that diffuse out of fuel elements such as used in the HGCR-1 decays to a long-lived solid or physiologically hazardous fission product. Thus, the presence of the noble gases in the HGCR-1 coolant does not contribute to the maintenance or hazard problem but these could be the controlling activities for exposure due to inhalation. Therefore, their removal may be desirable from the standpoint of reducing the level of total activity in the HGCR-1 primary system. Also, certain types of unclad fuel elements may permit the escape of short-lived xenon and krypton, in which case removal of the noble gases would also alleviate the maintenance problem. Methods of separating these gases from helium are reviewed in the following paragraphs.

The classical methods of separating chemically similar gases, gas chromatography and activated charcoal absorption have very low capacity and are inherently batch processes.

Charcoal used as an in-line absorber would not remove xenon and krypton, but only delay them in residence for a time proportional to their absorption coefficients.[24] Residence decay is effective for moderately short half-lived isotopes, is not required for very short half-lived isotopes which rapidly decay anyway, and has little effect on long-lived ones such as 10 year Kr^{85}.

The separation of noble gases from helium by diffusion through glass,[25] a process proposed for the isolation of helium from natural gas, or by the use of molecular filters[26] (materials whose interstitial

spacing is such as to allow ready passage to helium but not to larger molecules) has been suggested. These methods, however, have the disadvantage that the largest volume of gas, the helium, is the material which must diffuse through the media, requiring enormous surface areas and presenting large pressure drops.

Xenon and krypton may be separable from helium by the formation of clathrates.(27) The technique is presently in its infancy, but holds interesting promise. The clathrates are compounds formed by relatively large molecules which hold smaller molecules or atoms within a structural cage. Hydroquinone is such a material that forms stable complexes with argon, krypton, and xenon, but not with helium, which is small enough to escape. Molecules of SO_2, CO_2, HCl, and acetylene are also retained by hydroquinone.

Rare gases can be stored without resorting to high pressure cylinders with clathrates (the volume of argon gas present within the crystals is 70 times the volume of the crystal itself). Clathrate complexes are formed under high pressure, but once formed are stable at room temperature and pressure. The complex decomposes and releases the entrapped gas when heated, when a hydroquinone solvent is used, or when the surrounding crystals are merely crushed. Some phenolic compounds, through a similar mechanism, display high retention capacity for noble gases.

Although no data are available, it would appear that the formation of the clathrate complexes will vary in proportion to the partial pressure of the xenon and krypton in the coolant stream, which will be very low; thus, it must be with some skepticism that the possibility of the process being applicable is suggested.

While glass diffusion, molecular filters, and clathrate formation are not applicable to processing of the full coolant stream, they may be useful for the purification of a bypass stream.

4.1.4 Removal with Impurities Out-Gassed from Graphite

When heated, graphite releases H_2, H_2O, CO, CO_2, and hydrocarbons which are present as impurities resulting from the manufacturing process. The problems associated with impurities released from the graphite are not unique to reactors using unclad fuel elements, although the magnitude of the problems may be changed by the different fuel temperatures and the coolant radioactivity of unclad fuel element reactors.

Gas-cooled reactors which contain unclad graphite as a moderator or fuel matrix material require side stream processes (handling about 10^{-3}% of the coolant flow rate) for reducing the concentrations of out-gassed impurities. The helium purification system described in ORNL-2500 for the ORNL Gas-Cooled Reactor is typical of the systems proposed for other helium-cooled reactors, and it appears that gas returned to the reactor from such a

purification system will be completely decontaminated from all fission products except the long-lived noble gases. The effect of this removal of long-lived fission products in reducing the hazards associated with coolant leakage is appreciable.

4.2 Feasibility of Continuous Processing of HGCR-1 and PBR Coolant Systems

Generally speaking, the cost of continuous chemical processing is a function of the feed concentration and the plant volumetric throughput. Permitting the fission products to escape from the fuel into the voluminous coolant creates the problem of dilute concentration combined with high capacity throughput. The problem of removing parts per million concentrations of fission products from a high-temperature, high-velocity helium stream is a formidable one.

4.2.1 Effect of Processing on Shielding Requirements

Continuous processing of the primary coolant stream is not likely to have much advantage in reducing the cost of shielding. Even if the removal of all hard gamma emitters could be carried out effectively and economically, experience with radiochemical processing plants argues very strongly against relying upon the decontamination factors normally obtained in chemical processing as justification for minimizing shielding. Process upsets, equipment failure, and the like will at times permit the coolant stream to become radioactive, and sufficient shielding must be provided as protection for operating personnel during these periods.

4.2.2 Effect of Processing on the Maintenance of Components

The fission products of interest from the standpoint of maintenance are the solids which appear in the gas coolant stream by diffusion from the fuel elements or by radioactive decay from precursors which have diffused from the fuel elements. These fine solids deposit on equipment surfaces or agglomerate (deposit on large particles present in this coolant stream and on each other) to form relatively large, nondepositing particles. The deposition and agglomeration are competitive processes. The tendency for a particle to deposit rather than agglomerate is a function of local turbulence, of coolant and equipment temperatures, and of equipment size and shape, as well as of particle size and solids concentration. However, each component may be expected to develop a specific surface activity roughly proportional to the activity concentration in the coolant to which it is exposed.

The activities and decay characteristics of solids in the HGCR-1 primary system are summarized in Table III. Here it is seen that fission product chains of greatest interest from a maintenance standpoint are Cs^{137}-Ba^{137m} and Ba^{140}-La^{140} which constitute about 60% of the gamma activity of solids in the system during operation. Since both of these chains have relatively long half-lives, the total activity of the solids

Table III

Fission Product Solids Contributing to Contamination of HGCR-1 Primary System Components

Isotope*	Activity in Coolant After 1 Year of Reactor Operation, curies	Effective Half-Life*	Total Gamma Energy, Mev/Disintegration	Total Gamma Activity After t Days Decay, Mev-curies		
				t = 0	10	30
$Rb^{88}(Kr^{88})$	2.85×10^5	(2.8h)	0.47	1.34×10^5	-	-
$Y^{90}(Sr^{90})$	6.74×10^5	(28y)	0.056	0.38×10^5	0.38×10^5	0.38×10^5
Sr^{91}	6.34×10^5	9.7h	0.845	5.36×10^5	-	-
$Y^{91m}(Sr^{91})$	2.17×10^5	(9.7h)	0.551	1.20×10^5	-	-
Y^{93}	0.698×10^5	10h	0.7	0.49×10^5	-	-
Y^{94}	0.317×10^5	10.5m	1.4	0.44×10^5	-	-
$Ba^{137m}(Cs^{137})$	15.8×10^5	(26.6y)	0.661	10.44×10^5	10.44×10^5	10.44×10^5
Cs^{138}	2.73×10^5	32m	2.01	5.49×10^5	-	-
Ba^{139}	1.54×10^5	85m	0.380	0.585×10^5	-	-
Ba^{140}	6.56×10^5	12.8d	0.237	1.55×10^5	0.90×10^5	0.30×10^5
$La^{140}(Ba^{140})$	6.56×10^5	(12.8d)	2.11	13.8×10^5	8.03×10^5	3.17×10^5
La^{141}	2.81×10^5	3.7h	0.075	0.21×10^5	-	-
La^{142}	0.4×10^5	74m	0.66	0.26×10^5	-	-
	4.88×10^6			4.16×10^6	1.96×10^6	1.43×10^6

* Long-lived precursors are in parentheses. Half-lives of precursors are in parentheses.

in the system decreases rather slowly after shutdown of the reactor. Even 30 days after shutdown of the HGCR-1 for example, at which time nuclide chains with half-lives less than 1.5 days will have decayed by a factor of 10^6 or more, the total gamma activity decreases by only a factor of three. Thus, shutdown of the reactor to allow the activity in the equipment to decay, offers no solution to the maintenance problem unless, in addition, the long-lived fission products are removed from the gas stream before they deposit.

Cs^{137}-Ba^{137m} is a special consideration. Cesium is a vapor at the reactor operating temperature,[28] and hence will be present in the coolant as a gaseous contaminant until its partial-pressure in the coolant equals the vapor pressure of liquid cesium at the temperature of the coolest point in the circuit. About three months of reactor operation will produce this quantity of cesium, and condensation would occur, probably in the heat exchanger or the blower. A relatively small bypass will remove the cesium at a fast enough rate to prevent condensation in the blower. The bypass purification system for removing contaminants out-gassed from the graphite may effectively accomplish the cesium removal required. (See Section 4.1.4.)

Classical methods of removing particulate activity from the circulating gas stream include filtration, cyclone separation, or electrostatic precipitation. However, as shown previously, these methods do not appear to be feasible for handling the entire gas stream of a reactor such as the HGCR-1 because of the large flow rates involved (32,000 cu ft/sec) and the extremely small amounts of solids introduced into the gas (1.8 g/day). For this reason, an alternative method of removing solids is suggested. This consists of the injection of solid particles, such as ZrO_2, followed by their removal in a cyclone separator and electrostatic precipitator, as illustrated in Figure 5. This may be an effective and economical method of removing the radioactive barium and lanthanum particulates from the circulating gas stream; however, this approach has never been tested. Consequently, its effectiveness cannot be evaluated without further development work. In particular, experimental data on the deposition behavior of particulates and erosive effect of injected particles are needed.

4.2.3 Potential Hazards Reduction

The radiological hazard associated with coolant leakage and subsequent discharge from the reactor stack can be reduced to tolerable levels by the removal of relatively long-lived isotopes. Sidestream processing of about 10^{-3}% of the coolant removes nearly all of the Cs^{137}-Ba^{137m}, Kr^{85}, and Sr^{90}-Y^{90} and reduces Ba^{140}-La^{140} by a factor of five. This reduction in long-lived activity, together with the fixation of iodine on beds of silver mesh, would substantially reduce the hazard of major accidents.

4.2.4 Effect of Side Stream Processing on Activity in Blowers

Deposition of solids in the system may affect the amount of activity that can be removed by the side stream. Depending upon whether this occurs

before or after the bypass take-off, or before or in the blower, the bypass processing can become unnecessary in the one case or completely ineffective in the other. This point must be stressed because the lack of data on the deposition behavior of particulates makes reliable process design computation impossible.

If some method can be found of removing fission products from the gas stream before they deposit on surfaces of equipment, a small bypass stream may reduce the activity in certain components, such as blowers, sufficiently for direct maintenance. The following calculations indicate the fraction of the circulating gas stream that would have to be processed to accomplish this. In these calculations it is assumed that all activity circulates with the coolant and that activity not removed by the bypass process is subsequently deposited uniformly on all surfaces. Such an assumption may be unrealistic; however, this would be the case if the time required for deposition is long compared to the process rate.

If the blower is assumed to be a 12-ft-dia sphere upon the surface of which 10^{-4} of the total activity is deposited, the dose rate from deposited activity 1 ft from the surface of the blower can be estimated as follows.

System-deposited long-lived activity at reactor shutdown is 4.2×10^{6} Mev-curies or 1.6×10^{17} Mev/sec and the activity deposited in the blower is 1.6×10^{13} Mev/sec.

The uncollided gamma flux at a point external to a spherical shell source is given by,

$$\phi = \frac{S_a r_1}{2r_o} \ln \frac{r_o + r_1}{r_o - r_1} ,$$

where

ϕ = gamma flux (Mev/cm^2/sec),

r_1 = radius of sphere (cm),

r_o = distance from center of sphere to detector (cm),

S_a = source strength (Mev/cm^2/sec).

$$S_a = \frac{S_o}{4\pi r_1^{\,2}} ,$$

where

S_o = total gamma source strength (Mev/sec).

Then,

$$\phi = \frac{(1.6 \times 10^{13})}{8\pi(6)(7)(929)} \ln \left(\frac{13}{1}\right) = 4.18 \times 10^{7} \text{ Mev/cm}^2\text{/sec.}$$

A conservative flux to dose conversion for gamma radiation composed of photons having energies in the range 0.5 to 1.5 Mev is 2×10^{-6} r.cm^2.sec/hr.Mev.

$$\text{Dose rate} = 4.18 \times 10^{7} \times 2 \times 10^{-6} = 84 \text{ r/hr.}$$

After 30 days' decay,

$$\text{Dose rate} = 84 \times \frac{1.46 \times 10^{6}}{4.2 \times 10^{6}} = 29 \text{ r/hr.}$$

The 2-in-thick steel shell will reduce the unshielded dose by about a factor of 2, giving 42 r/hr at shutdown and 15 r/hr after 30 days' decay with no processing. Thus a continuous process which would remove 99.9% of the depositable activity from the coolant stream would be required to cause a reduction of these dose rates to levels tolerable for direct maintenance. The effect of changing the amount of side stream is shown in Table IV. It is seen here that side-stream processes handling less than 1% of the coolant flow rate will have slight effect on the circulating coolant activity level or on the dose rate from contaminated equipment immediately after reactor shutdown. The dose rate from equipment which has been allowed to decay for 10 days or longer will be greatly reduced by a very small side-stream purification system because of the removal of long-lived activity from the coolant. Whether such an approach is feasible, however, depends on the cost penalty of reactor down-time and the ability of the side stream to remove long-lived activities.

Table IV

Dose Rate from HGCR-1 Blower (Assumed 12-ft-dia Sphere) at Reactor Shutdown and After 10 Days' and 30 Days' Cooling for Various Side-Stream Processing Rates

% Flow to Side-Stream Processing	Activity From Blower at Shutdown r/hr	Activity After 10 Days' Cooling r/hr	Activity After 30 Days' Cooling r/hr
0	42	20.2	15
3.2×10^{-3}	18	1.0	0.400
10^{-2}	12	0.33	0.130
10^{-1}	6.5	0.035	0.013
1.0	2	0.004	0.001

4.2.5 Effect of Fuel Type

The fuel element described in the General Atomics proposal[3] and the British HTGR described in ATRS/Conf./6, [29] which features controlled diffusion of fission products into a helium purge stream has considerable merit so far as the chemical processing is concerned. Here the purge stream is relatively small and the concentration of fission products proportionally high, enhancing the effectiveness and economy of the continuous removal of the fission product contaminants. Specific shielding for the purge stream should not be expensive, and the fact that the primary coolant stream reactor components are not exposed to the purge stream may make direct maintenance of the coolant equipment feasible.

5. OPERATION AND MAINTENANCE OF CONTAMINATED EQUIPMENT

As shown in previous sections, there may be large quantities of radioactive fission products in the primary system of gas-cooled reactors such as the HGCR-1 and the PBR. Continuous removal of this activity by conventional methods at a rate sufficient to keep the system as clean as that anticipated for complete retention of fission products in the fuel elements does not appear to be economically feasible. One has the alternative, therefore, of either decontaminating equipment for direct maintenance or providing facilities for remote maintenance. The primary system shielding requirements and the hazards associated with fission products leaking from the system with the coolant are the same for both of these approaches. Consequently, the choice between remote maintenance and decontamination plus direct maintenance depends on the feasibility and costs of decontamination compared to the cost of providing for, and carrying out, remote maintenance. In some cases it may be preferable to provide facilities for remote maintenance, or, where possible, design the system for direct maintenance without decontamination, rather than rely on decontamination. The maintenance of the HGCR-1 plant, for example, does not rely on decontamination, while the PBR plant depends on decontamination and direct maintenance. As a basis for comparing the merits of these approaches, some of the maintenance problems which might be encountered and possible solutions to these problems are reviewed as follows.

5.1 Premaintenance Decontamination

After one year of operation of the HGCR-1 the coolant system will contain (if there has been no continuous coolant cleanup) about 800 grams of solids including cesium (5×10^6 curies), 2.6 standard cubic feet of xenon and krypton (3×10^6 curies), and 20 grams of iodine (1.6×10^6 curies).

When the reactor is shut down for maintenance, the noble gases and iodine will be removed from the system with the helium and stored. Iodine can be separated from the helium by a one-pass treatment of the coolant through a silver bed.

As is shown in Table IV, assuming uniform and complete solids deposition, the blowers for the HGCR-1 will require activity reduction by a factor of 10^3 to allow direct maintenance. A 10-day cooling period will reduce the activity by only a factor of two. Direct maintenance will be possible only if an economical procedure can be developed to give the required 10^3 factor of reduction. This may be obtained by deposition control, bypass cleanup of gas and/or decontamination. (The presence of radioactive dust and the presence of alphs, beta, and low energy gamma activity will aggravate the decontamination problem but are not considered here.)

Decontamination[32] of a surface is generally most effective when a part of the surface is removed, either by dissolution with chemical reagents, by the attriting impingement of solids or liquid particulates, or by mechanical descaling stresses exerted by ultrasonic vibration. The latter is applicable to small articles that can be immersed in a cleaning tank.

Decontamination procedures, established through experience in chemical processing plants normally involve a series of treatment, beginning with the cheaper and less corrosive solvents, progressing through the complexing agents to the harsh corrodents that dissolve away the contaminated surface. Surface condensation from injected wet steam or internal water sprays removes a substantial fraction of loose or soluble surface deposits.[33] Complexing agents (Versene, tartrates, citrates) are frequently effective in dissolving some surface deposits.[34] Solutions of chromous or uranous sulfate are quite effective in loosening the scale on stainless steel.[35] A solution of 30% HNO_3 - 3% HF effectively decontaminates stainless steel by etching the surface of the stainless. Wet chemical decontamination in chemical processing plants is quite effective, not intolerably destructive, and relatively inexpensive.

Chemical methods of decontamination are applicable to gas systems. The problem of drying equipment after decontamination is not of such magnitude as to preclude wet decontamination methods, although provision for isolation is required. Proper design of equipment to provide for the high speed impingement of wet steam containing entrained reagents and for the recirculation of these reagents can reduce chemical costs and waste volumes to acceptable levels (see Figure 6). The development of increasingly effective reagents (such as the proprietary compound, Turco 4501) continues to reduce the down-time required for decontamination.[36]

By means of a jet decontamination spray using the Turco 4501 process, the Thorex Pilot Plant decontaminated its 550-gallon dissolver tank from a 26-month accumulation of fission products (the dose rate at contact with the tank was estimated to have been 8000 r/hr), reducing its activity level to the dissolver cell background (70 mr/hr).[37] The treatment was estimated to have required two days' time and a manpower expenditure of four man-days. The cost of chemicals was $872, and the waste volume totaled 700 gallons. Operating personnel predict that improved design will reduce the treatment time and chemical volumes required. It should be pointed out that the decontamination factor achieved in this case may not be representative of what might be done in all cases depending on the geometry of the equipment and nature of the deposited solids.

Recent experiments performed in the ORNL Low Intensity Testing Reactor[30] have given some indications of the way in which a variety of variables affect isotope deposition and show that careful equipment arrangement and design may make it possible to control the deposition rate and reduce the contamination of equipment which is expected to require relatively frequent maintenance.

UNCLASSIFIED
ORNL—LR—DWG 40735

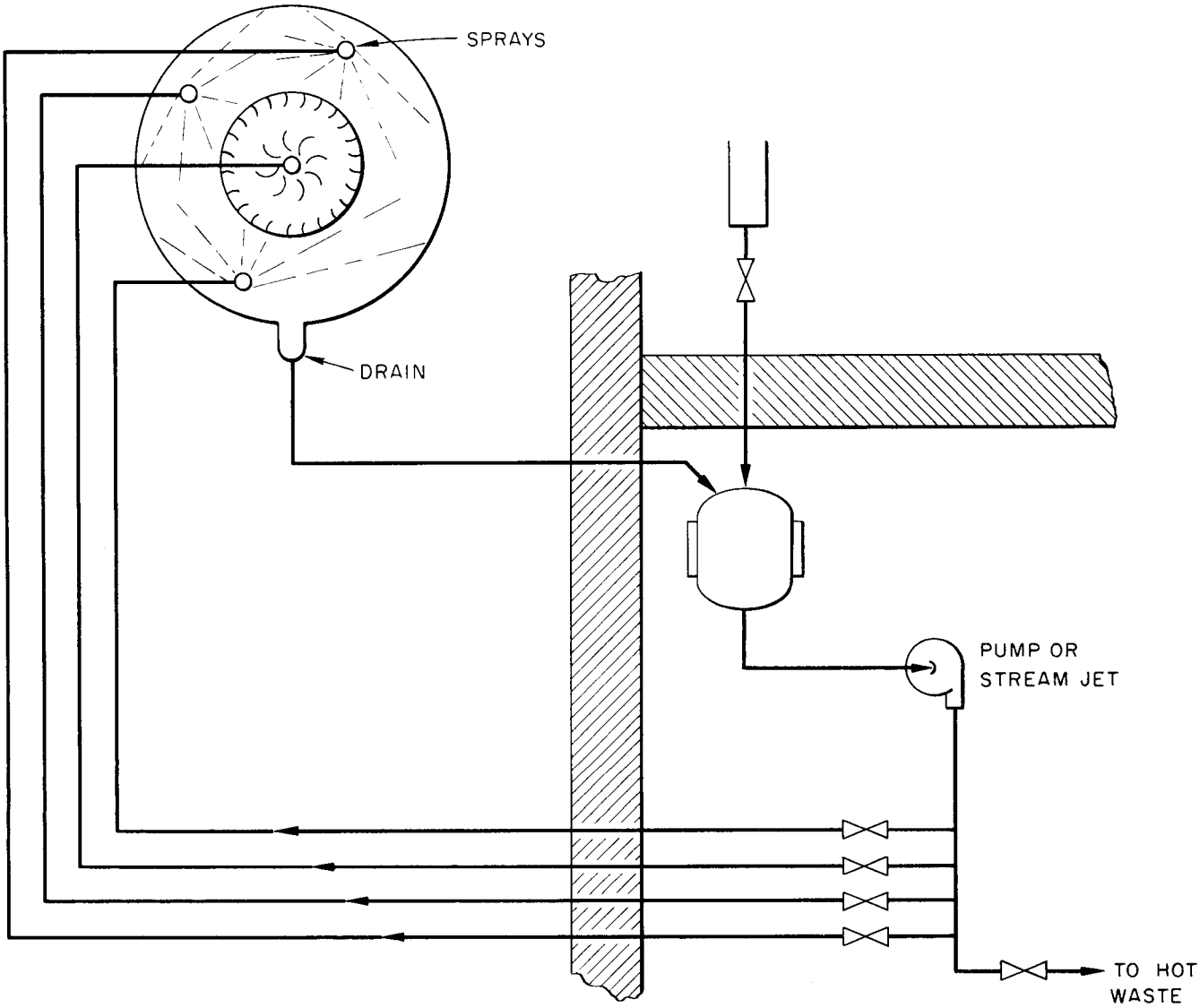

Fig. 6. Conceptual Built-in Decontamination System.

Actual experience in operating with unclad fuel elements will give the only completely reliable information concerning the amount and types of deposits and the best methods of coping with those deposits. The Turret Experiment[31] and various loop experiments at ORNL and elsewhere will provide much data on deposition and decontamination.

It may be concluded from the foregoing that equipment exposed to contaminated gases can if required be decontaminated for direct maintenance. Sufficient data are not available to establish the need for decontamination nor to predict the cost of reducing the activity to a tolerable level.

5.2 Remote Maintenance Methods

In considering the problems of remotely maintaining contaminated reactor systems, three basic methods of servicing have been proposed.[1] These methods are listed below in the approximate order of increasing capital investment:

1. Remote servicing in place.
2. Removal and replacement with remotely controlled equipment.
3. Built-in spares instead of servicing.

The selection of a specific method or combination of methods for servicing a particular component requires an economic study of the capital cost of the required equipment and facilities, the cost of down time, and the expected frequency of failures. The suitability of each of the methods listed above is dependent upon the state of the arts involved in that method (e.g., remote maintenance equipment, viewing equipment, decontamination techniques, etc.) and upon the radiation level at the contaminated equipment.

5.2.1 Remote Servicing in Place

Considerable experience with remote maintenance in situ has been obtained from operation of the Homogeneous Reactor Test at ORNL. The technique used in the HRT is to flood the reactor cell with water to shield contaminated equipment, and service from above with long-handled tools.[39,40] However, this concept would be unsuitable for large gas-cooled reactor systems. Because of the sizes of the equipment involved, the water depth required for shielding would be too great for good viewing and convenient tool manipulation. Submerged maintenance would be particularly undesirable in graphite systems such as the GCR-2 and HGCR-1 in which it would be important not to expose the graphite to moisture.

Therefore, in-place servicing of contaminated equipment in large gas systems would need to be performed by dry maintenance techniques. This involves the use of remotely controlled servicing and viewing equipment. The feasibility of using commercially available remote

manipulators for maintenance of small components has been demonstrated in tests performed at ORNL.(41) However, much work needs to be done before this equipment is shown to be practical for use with large reactor systems. The larger components simplify some problems of internal access, but also require larger manipulators to handle the heavy parts involved.

The reactor shutdown time for remote repair of major components would probably be two to five times longer than for direct servicing. Since repair work is usually a slow process at best, the shutdown time for remote servicing of large equipment in place would probably be of longer duration than could be justified for power reactors.

5.2.2 Remote Replacement

With this maintenance philosophy, remote servicing and viewing equipment is utilized to remove a failed component from the system and replace it with a spare unit. The reactor could be put back into operation without waiting for the failed unit to be repaired. Thus, the shutdown time for this method is less than for remote repair in place.

After removal, the failed item may be either repaired or discarded. If repair is possible, the unit may be decontaminated to permit direct-contact servicing, or it may be serviced remotely in a hot cell.

In the case of large power stations, the high cost penalty of long shutdown times may make replacement preferable to repair in place.

5.2.3 Built-In Spare Equipment

In some systems the value of on-stream time may be so high and the cost of individual components sufficiently low that spares can be built into the system. Valves would be needed to isolate the spare units from the contaminated gas stream. The failure of a component would actuate these valves and the spare unit would be put on stream very quickly.

This concept would not be useful for the major pieces of equipment in large gas systems because of the high capital cost involved and the lack of reliable valves to isolate the spare units. This method might be useful for some of the smaller equipment, however. In any case, it would be necessary that the failed item be removed and discarded or repaired and replaced by remote means.

5.3 System Operation and Maintenance Problems

A special problem that arises in any maintenance operation which includes cutting into and rewelding a contaminated component is inspection of the new weld in the radiation field. According to Section UW2 of the 1956 edition of the ASME Unfired Pressure Vessel Code, "All longitudinal and circumferential joints of vessels that are to contain lethal substances,

either gaseous or liquids, shall be of the double-welded butt type or its equivalent and shall be fully radiographed." The highly contaminated coolant would certainly be classed as a "lethal substance." Present remote welding techniques are in such a rudimentary state that it would be difficult to routinely make sound welds in the large piping. Even if the weld were made satisfactorily, the inspection of the weld then becomes a problem. It is possible that the radiation level surrounding the weld will be high enough to interfere with radiography of the weld. It does not seem practical to use the residual activity as a source for radiographic inspection.(38)

Table UW12 of the Winter 1958 Addenda to the ASME Unfired Pressure Vessel Code allows a weld joint efficiency of 100% for a fully-radiographed, double butt-welded joint; if the joint is not radiographed, the maximum joint efficiency is only 70%. If radiography of the rewelded joint could not be performed, as is discussed above, according to present code specifications the allowable joint efficiency would be reduced by 30% from the original weld. Therefore, either the maximum allowable operating pressure would have to be reduced by 30% or the system designed with the reduced joint efficiency of 70%. Either alternative is not attractive since in both cases the power cost is adversely affected.

With present remote welding equipment, even the 70% joint efficiency probably could not be attained remotely. However, one must assume that procedures and equipment for remote welding will be developed which will produce sound welds routinely. Development of new methods of inspection and testing of the welds must keep pace with the progress in remote welding techniques in order that code specifications may be satisfied.

Some reactor designs have assumed that major components of the primary system may be serviced during reactor operation by use of valves to isolate the component from the contaminated gas. However, this maintenance concept assumes that these valves can be made leak-tight initially and that their sealing characteristics can be maintained during long-term reactor operation. The use of such isolation valves is not recommended since they are potentially a source of trouble. Even if they seal properly initially, it is quite probable that frequent servicing would be needed to maintain the degree of shut-off required for on-stream maintenance.

Instead, it is suggested that simple butterfly valves be installed for flow-control purposes. All maintenance would be performed after reactor shutdown with the system pressure maintained at slightly below atmospheric; thus, all leakage would be into the system, eliminating the need for isolation valves.

The butterfly valves would not be expected to give trouble since they are not required to seal leak-tight. If a failure did occur, however, the valve could be cut out of the line and replaced. The equipment for doing this would be the same as that used for servicing the motor-blower units.

Valve operators would be in a welded tank mounted on the valve by a seal-welded flange. This installation is comparable to the canned motor installation for the helium motor-blower units. In case of failure of a valve operator, remote manipulating equipment or specially designed valve maintenance equipment would be used to remove and replace the operator.

5.3.1 Piping Contamination

If activity deposits from the gas stream uniformly over the internal surfaces of the primary coolant system, the piping will become highly contaminated with fission product activity. After a few weeks of reactor operation the piping would probably be too highly contaminated for direct maintenance to be attempted.

However, the piping system would not be expected to require frequent maintenance. The only components in the piping system which would be expected to suffer failures are the expansion joints. These joints should be installed with adequate space and access for remote cutting and welding machinery to be used. The defective bellows would be cut off the pipe, and a new one welded in by remotely controlled devices.

5.4 Steam Generator Maintenance

Recent data[30] indicate that fission products may deposit preferentially in certain components or locations, rather than uniformly throughout the primary system. If this is the case, then the steam generator placed close to the exit of the reactor may act as a cleanup system for the components downstream (e.g., the blower) and reduce their activity level. However, it is difficult to estimate the distribution through the system with preferential deposition occurring. Therefore, in the following treatment it is assumed that the deposition per unit area is uniform over the entire primary system.

The most probable type of failure to be expected in the steam generator is a leaky tube. If such failures occur frequently, it will be necessary to provide means for routinely plugging tubes. Other types of failures such as a leak in the steam generator shell can be assumed to constitute a major failure requiring removal and replacement of the unit. The problem of plugging leaking tubes, however, can be handled in situ by remote maintenance devices or by direct maintenance with or without premaintenance decontamination. These approaches are compared in the following paragraphs.

5.4.1 Dose Rate at Steam Generator

In order to determine if direct maintenance of the steam generator might be possible, an estimate was made of the radiation dose rate near an unshielded steam generator, based on shielding calculations made in the HGCR-1[1] design study. The dose rate is calculated based on the assumptions that: (a) no credit is taken for activity reduction due to a fission product removal system, (b) the total system activity is divided equally among the

eight steam generators in the HGCR-1, and (c) the steam generators are of a geometry similar to the GCR-2 steam generators. The calculation method is explained in detail in Appendix D of ORNL-2653.[1] In the HGCR-1 design study the dose rates were calculated for shield thicknesses of 3, 4, and 5 ft of concrete. In this study these results were extrapolated to zero concrete thickness to obtain an estimate of the dose rates near an unshielded steam generator (i.e., direct maintenance).

One point that should be noted here is that gamma photons with energies below about 1 Mev were not included in the calculation of the dose rate at reactor shutdown. These gammas were not important to the shielding calculations in ORNL-2653 since they are attenuated so rapidly. Hence, no data were available for extrapolation. In the unshielded case, however, the dose rate from these soft gammas could be controlling for short times after shutdown if they are quite abundant. For this reason, the shutdown dose listed in Table V is probably somewhat low. However, the dose rate immediately at time of shutdown is not of great concern since a waiting time of about 10 days may not in some cases be unreasonable for steam generator maintenance. In order to more accurately estimate the dose rate at the steam generator for 10 days after reactor shutdown, the complete calculation was made with all gamma energies considered. These results are presented in Table V.

Table V

Doses at Steam Generator (Unshielded)

	Time After Reactor Shutdown, days		
	0	1	10
HGCR-1 dose rate, mr/hr	$\sim 1.6 \times 10^5$	$\sim 1 \times 10^5$	4×10^4
GCR-2 dose rate, mr/hr	2.57	0.61	0.54

As a comparison, the dose rates near a steam generator in the GCR-2 design (using metal-clad fuel) are also given in Table V. These dose rates were calculated in ORNL-2505[45].

In the case of the HGCR-1, Ba^{137m} and La^{140} account for 97% of the dose rate at 10 days after reactor shutdown. If means can be found to reduce the concentration of Ba^{137m} and La^{140}, direct maintenance may be possible. The La^{140} activity could possibly be reduced by a longer hold-up time in the fuel element, but since Ba^{137m} results from Cs^{137} with half-life of 26.6 years, it would be difficult to reduce the activity of Ba^{137m} by this method. Therefore, it will be necessary to remove Cs^{137}

or Ba^{137m} from the gas stream before it deposits on the equipment surfaces, or decontaminate the equipment if continuous removal is not possible.

With the concentrations of activity considered to be present in HGCR-1, direct maintenance of an unshielded steam generator of conventional design is not possible if uniform deposition governs the distribution of fission products within the primary system. As an alternative, it seems feasible to design a shielded steam generator which permits tubes to be plugged directly. This design is discussed below.

5.4.2 Steam Generator Design for Direct Maintenance

It is proposed that the steam generators have water-containing tubes which penetrate the boiler shell, pass through the concrete shield wall, and connect to headers outside the biological shield. With this arrangement the steam and water headers are shielded from the highly contaminated equipment and direct maintenance methods can be used. It is also desirable to have an offset in the penetrations through the shield so that direct radiation streaming from the steam generator is eliminated.

It must be kept in mind that a leaking tube provides a path whereby fission products from the primary system can escape into the steam system. Therefore, the primary system should be flushed with clean helium, and the pressure in the steam generator shell should be reduced to slightly below atmospheric before the headers are opened. Also, after the leak is detected, the primary system pressure should be kept somewhat below the steam pressure at all times during pressure letdown.

After the reactor is shut down and the steam generator loop is filled with clean helium, the headers are opened by personnel wearing protective clothing. The defective tube would be located by plugging and pressure testing each tube separately. The leaking tube is isolated by plugging within the headers or is "pinched off" outside the headers. The headers are then closed, the air and moisture which has leaked into the system is removed, and the plant is restarted.

It is felt that this arrangement and method of direct maintenance of the steam generators is to be desired over a system in which remote procedures are necessary. Although the cost of the proposed steam generator as compared with other designs is somewhat uncertain, it does not appear that the proposed design would suffer a serious cost disadvantage. Estimates of costs of GCR-2 steam generators with internal headers and with external headers(42) indicate that either type could be constructed at about the same cost. The prices quoted, however, are not directly applicable to a contaminated steam generator because the external header designs brought the water tubes into a few collector pipes at the steam generator shell. The water tubes penetrate the shell, but, rather than continuing to the steam and water drums as proposed here, they terminate at the external surface of the shell. The collector pipes then connect to the main headers which are located outside

the steam generator. The aim in these designs was to make the collector pipes large enough that a man could reach back into them to plug leaking tubes by welding. For contaminated systems, however, this maintenance concept is not applicable because of the high radiation level. Thus, an additional cost of the tube penetrations through the concrete shielding must be added. It is estimated that this cost would be about $40,000 per steam generator.[43] By comparison, the installed cost of remote maintenance equipment designed for plugging tubes on the PAR steam generators was estimated at $491,000.[44]

Another important cost factor in considering steam generator maintenance is the plant down-time. While it is difficult to estimate the down-time and labor involved in direct maintenance at the proposed external headers, the repair work should be performed much faster when direct techniques are employed. The high cost of power plant down-time provides a strong incentive to design for direct maintenance wherever possible.

5.5 Blower Maintenance

When designing reactor systems in which the coolant is highly contaminated with fission products, every effort must be made to prevent coolant leakage from the primary system. Since any penetration into the primary system is potentially a source of leakage, the number of penetrations should be held to a minimum. When penetrations cannot be avoided, the seals used must maintain the gas leakage within the tolerances established with regard to health physics hazards.

Of particular concern is the use of shaft seals on helium blowers. The use of shaft seals permits the motor to be mounted outside the primary gas system so that it does not become highly contaminated with fission products. In case of motor failure, the motor could be serviced without opening the primary system. The motor could possibly be mounted behind shielding and service in place, or it could be removed and repaired in a conventional manner. The main question in such installations is the integrity of the shaft seals. Although it has been stated that satisfactory shaft seals for high-pressure helium service can be developed,[42] such seals have not yet been demonstrated. The problems involved when using shaft seals in contaminated systems are certainly greater than for a conventional "clean" system.

Therefore, until satisfactory shaft seals have been demonstrated, the designer is left with the alternative of using the "canned" design. The canned motor arrangement essentially eliminates helium leakage at the blower since the shaft does not penetrate the primary system. It is still necessary to have penetrations for service lines (cooling water, electrical leads, etc.), and seals must be provided for these lines. Since these are all static applications, no difficulty in developing suitable seals is anticipated.

Quotations for GCR-2 helium blowers indicate that canned motor-blower assemblies are about 30% higher than uncanned units. However, with the present state of helium shaft-seal development, it would seem that one has no choice but to pay this cost penalty in systems which circulate highly contaminated coolant.

Preliminary calculations for the HGCR-1 (Table IV) based on uniform deposition of fission products indicate that the radiation level at the blowers would be about 20 r/hr at 10 days after reactor shutdown.

The maintenance philosophy chosen in the HGCR-1 study for the blowers is for removal and replacement of the defective unit. In case of a blower failure, the reactor would be shut down, and the helium would be removed to the contaminated helium storage area. The system pressure would be maintained slightly below atmospheric, and the blower would be cut out of the system by remote cutting equipment and removed by the overhead crane. A new blower unit would be brought in and positioned by the crane, and remote welding equipment would be used to weld all connections.

The blowers must be properly located to allow access from above for removal by the overhead crane. All piping and equipment must be arranged to provide ample clearances for operation and viewing of the remote welding equipment.

5.6 Feasibility of Direct vs. Remote Maintenance

Remote maintenance of a gas-cooled reactor using unclad fuel elements seems within the capability of present technology. Remote maintenance equipment now in use would not be capable of in situ repair of equipment, but the philosophy of remote replacement can be followed satisfactorily. The cost of maintaining such a system by the techniques discussed previously is extremely difficult to evaluate at the present time.

Before remote procedures can be satisfactorily adapted for routine maintenance of large, contaminated gas-cooled reactors, considerable work must be done in the development of equipment and techniques. Several possibilities may be considered. The philosophy adopted for the PAR project may be followed whereby specialized equipment is developed for each operation such as cutting, positioning, and welding of pipe or the plugging of heat exchanger tubes. The practicality of this method has been demonstrated to a limited extent by the PAR project.[38,44] However, work remains to be done to prove the reliability of remote welds and to adapt this equipment to the pipe sizes required in gas-cooled systems.

One alternative is to develop extremely versatile manipulating equipment having the strength and dexterity to perform many remote operations. This is the procedure conjectured for maintenance of the HGCR-1.[1] Some work by a number of companies has been expended along these lines; at present, however, such machines have limited capability. This equipment would be much more

expensive than the more specialized devices, but fewer items would be required because of their greater versatility.

Another possibility is to design the reactor components in such a manner that direct or semiremote maintenance may be performed on the equipment, even if the coolant is highly contaminated. This idea is described in a design study being made at ORNL.[46] In this study, special attention is given to the design of both the heat exchanger and the blowers.

The heat exchanger and the reactor core are contained in a single pressure shell, reducing the numerous problems associated with high-temperature piping, expansion joints, and shell penetrations at the high temperatures. Maintenance is performed on the heat exchanger tubes in a manner described in Section 5.4.2.

Blower maintenance is based on semiremote handling techniques (long-handled wrenches, etc.), but the system design is such that the dose rate in the vicinity of the blower would be only 1 r/hr, thus permitting limited contact maintenance in the event a flange sticks or other unforeseen events arise. The blower is designed such that the moving parts (rotor, shaft, bearings, and seal) may be removed by breaking a seal-welded flanged joint, and then removing these parts as a unit. The blower housing should not require maintenance so that any maintenance to the blower will not require cutting into the primary system piping.

6. RELATIVE COSTS OF CLEAN VS. CONTAMINATED GAS SYSTEMS

In order to isolate the cost attributable to the presence of high levels of fission product activity in the primary gas system, several methods of analysis may be employed. On the preface that the most useful information would present these costs on the basis of mills per kilowatthour of electrical output, the cost estimates for construction and operation of similar systems with clad and unclad fuel elements were studied. Two facts have become apparent as a result of these efforts. First of all, it is difficult to isolate any one cost and say that it is a direct result of omitting the fuel cladding without distorting the over-all picture presented by the complete cost analysis. Second, since the cost of many of the items of remote maintenance are independent of power level of the reactor, over a wide range of power levels, the presentation of these costs on the basis of electrical output presents an unrealistic concept.

A second and perhaps more helpful method of examining the cost data for gas-cooled reactor systems with unclad fuel elements is to enumerate the cost reduction which might be realized if, by some means, the contaminant were eliminated from the coolant. Such means might include either the development of an impermeable ceramic coating which would retain the heat transfer characteristics of the unclad element, or processing the circulating coolant to remove the fission products. The total reduction thus listed represents the maximum capital cost which could profitably be saved by the development of an impermeable coating or spent for continuous processing equipment.

The third alternative is to examine the individual cost of equipment and operations required for the remote maintenance of a system with a contaminated gas coolant. These figures may then be applied to any system under consideration. This presentation has the advantage of illustrating the fact that equipment to perform remote maintenance is a major expense and that similar costs are involved regardless of power level. Also based on this presentation, the costs of remote maintenance can be compared with the sum of costs of direct maintenance and cost of system decontamination.

6.1 Cost Estimates for Gas-Cooled Reactors

The information used as a basis for this study includes the design and cost estimates for the two gas-cooled reactors proposed by ORNL, the GCR-2[47] and the HGCR-1,[1] and the feasibility study by Sanderson and Porter for the PBR.[20] Additional numbers concerning costs of remote maintenance have been obtained from a Westinghouse report concerning the layout and maintenance of the Pennsylvania Advanced Reactor.[38,44] Insufficient cost information is available concerning the design of the HTGCR by General Atomics to include it in this cost study.

The design approach for the HGCR-1 was to maintain the same size core as the GCR-2 but to take advantage of the increased power density to raise the power level from 225 Mwe to 1130 Mwe. Therefore, the cost estimate for the HGCR-1 relies heavily on previous values collected for the GCR-2

design estimate. In addition, for comparison purposes, an extrapolation has been made(1) for the cost estimate of a power station with clad fuel elements producing the same electrical power as the proposed HGCR-1. This 1130 Mwe plant with clad fuel elements was considered to have four plants similar to the GCR-2 concept, each producing 282 Mwe. It is obvious that this procedure will not necessarily produce the optimum design; however, it should be useful in investigating the relative difference in costs between the clad and unclad systems.

It should be emphasized that figures giving the cost of projected maintenance operations must, of their own nature, be extremely tenuous. Even after the detailed design of a reactor system, only a guess can be made concerning problems which might be encountered in their maintenance and costs that will be involved in the solutions to these problems. The best that can be hoped, without actual operating experience, is that the estimates will give the order of magnitude of these costs and perhaps indicate the direction and proportion in which they will vary with design power level.

6.1.1 The HGCR-1 and the Extrapolated GCR-2 Capital Cost Comparison

For comparison, the pertinent design features of these reactors are summarized in Table VI. The detailed list of estimated capital costs for the HGCR-1, the GCR-2, and the extrapolated GCR-2 plant are given in Table VII. Those items in the HGCR-1 estimate which are sensitive to the absence of fuel cladding are indicated. All of these numbers represent a collection of estimates from the previously cited reports.

One of the first items which might be listed as the result of a contaminated coolant system is the additional shielding necessary for the primary circulating loop. This is an added cost which might not be required in the case of a clean coolant; however, a comparison of the cost estimates for the HGCR-1 and the extrapolated GCR-2 shows a lower cost figure for the total shielding cost ($4,045,000 compared to $6,900,000). This lower shielding cost results from the fact that the power density has been increased for the HGCR-1, thereby decreasing the size of the reactor core and reducing the shielding significantly at this point. This comparison illustrates that although shielding for the primary system is an additional cost for unclad systems, the net result is a savings. A similar instance is demonstrated by several additional items in this cost comparison.

One item which appears directly related to the removal of the cladding is the cost of the containment vessel. This cost was estimated in the HGCR-1 design to be $4,122,000. On first appraisal it might be concluded that since this vessel replaces the cladding as a line of containment against the release of fission products to the atmosphere its cost ought to be compensated to some extent by the reduction in the cost of cladding. Actually, this is not the case since the estimated cost of the fuel elements for the HGCR-1 is $32.38 per kilogram of uranium, while the estimated cost

Table VI

Design Features of the PBR, GCR-2, and HGCR-1

	PBR	GCR-2	HGCR-1
Heat generated (Mw)	350	687	3095
Gross electrical output (Mw)	139.1	252	1256
Net electrical output (Mw)	126.8	225	1130
Steam temperature (^{o}F)	1000	950	1050
Steam pressure (psig)	1450	950	1450
Gas system volume (cu ft)	5629	107,000	190,000
Plant factor	0.80	0.80	0.75
Total capital costs - nonfuel ($)	32,221,000	75,474,200	275,748,000
Operating costs			
Total - nonfuel[a] (mills/kwhr)	1.0[b]	0.89[c]	0.71[d]
Total - fuel (mills/kwhr)	1.99[e]	1.73	1.47
Total capital charges (mills/kwhr)	5.08	7.52	5.35
Total operating costs (mills/kwhr)	8.07	10.14	7.53

a. Includes wages, utilities and supplies, and maintenance.
b. A very rough estimate.
c. Includes a charge for maintenance of 0.25 mill/kwhr.
d. Includes a charge for maintenance of 0.42 mill/kwhr.
e. This is considered to be a maximum figure by Sanderson and Porter.

Table VII

Comparison of Capital Cost Estimates for the GCR-2 and HGCR-1

Item	GCR-2 (Original Design)	GCR-2 (1130 Mwe)	HGCR-1
Land and land rights	$ 450,000	$ 900,000	$ 900,000
Site preparation	700,000	2,100,000	1,400,000
Power house	6,585,000	23,000,000	11,816,000
Shoreline improvement	410,000	1,080,000	1,080,000
Reactor shielding	1,527,000	6,900,000	4,045,000[a]
Pressure vessel	2,331,000	9,300,000	3,500,000
Graphite	3,004,000	14,700,000	3,498,000
Fuel handling	1,231,000	3,700,000	1,735,000
Helium system		15,400,000	
Storage and evacuation	441,000		882,000
Cleanup	69,000		128,000
Piping including insulation			2,629,000
and valves			193,500[b]
and expansion joints	1,235,600		738,000[c]
Blowers and motors	2,105,000		7,104,500[d]
Instrument and control	1,948,500	7,800,000	2,683,500[e]
Steam generators with installation	5,477,600	21,800,000	17,250,000
Miscellaneous laboratory equipment	50,000	100,000	100,000
Containment cell			4,122,000
Hot cell and remote maintenance equipment			6,900,000
Total reactor plant facilities	$19,414,700	$106,780,000	$ 55,508,500
Steam plant equipment	3,349,000	8,800,000	8,835,000
Turbine-generator units	12,030,000	59,000,000	60,400,000
Accessory electrical equipment	4,091,000	20,000,000	20,500,000
Miscellaneous power plant equipment	875,000	1,750,000	1,750,000
Direct cost (nonfuel)	$47,904,700	$196,330,000	$162,189,500
Indirect costs	7,615,000	30,450,000	24,328,500
Escalation	5,936,100	27,213,000	22,382,000
Contingency	7,927,500	50,799,000	41,780,000
Design cost	2,510,000	30,479,000	25,068,000
Total cost (nonfuel)	$71,893,300	$335,271,000	$275,748,000
Fuel element fabrication for first core	4,230,000		2,765,000
Value of uranium	30,000,000		18,800,000

a. Includes biological shielding for primary coolant loops.
b. Includes $21,500 for spares.
c. Includes $82,000 for spares.
d. Includes $800,000 for spares.
e. Includes $1,000,000 for penetration of containment vessel to control room.

of fuel in the GCR-2 with cladding is $30.91. The higher cost of the HGCR-1 elements comes from the estimated cost of the manufacture of the graphite covering necessary to maintain the integrity of the elements under thermal stress.

The HGCR-1 cost estimate allows $6,900,000 for remote maintenance equipment. This includes $4,000,000 for a hot cell to be used in component decontamination and repair with $400,000 for hot cell tools. The hot cell cost was estimated by extrapolating the cost of a much smaller cell constructed for the ORR. In addition, remote manipulators of the General Mills type were estimated to cost from $50,000 to $75,000, and television equipment was estimated at $15,000 per unit. It was suggested that one such set of manipulating and viewing equipment be provided for each blower cell and that one additional manipulator be obtained for placement in any of the cells for "two-handed" work. This combination was to accomplish all maintenance operations such as cutting and welding, without additional specialized equipment. The total cost of this remote operating and viewing equipment was $2,000,000, and an additional amount of $500,000 was allowed for similar equipment in the auxiliary equipment cells.

The HGCR-1 cost estimate mentions two "hidden" costs of remote maintenance. One of these is the lowered plant factor which results from longer shutdown periods necessary for remote maintenance; the other is the cost of spares which was noted in the estimates for the cost of the gas handling system.

6.1.2 Operating Costs for the HGCR-1 and Extrapolated GCR-2

The estimated operating costs for these three reactor concepts are listed in Table VIII. Wages listed include only operating personnel. Personnel for maintenance are included as a maintenance cost.

The annual cost of maintenance is one of the more significant and least well-defined of all the operating costs; it has been estimated at $3,100,000 per year in the HGCR-1 design cost estimate. Of this amount, $600,000 was for maintenance labor at the plant, $1,500,000 for consumed spare parts and tools, and $1,000,000 for the disposal of contaminated used parts and tools.

Argument is advanced[1] that fuel burnup cost can be considered similar for both the HGCR-1 and GCR-2. In addition, the estimated cost per kilogram of uranium in the fuel is about the same for the two different fuel elements. One of the major reductions in fuel costs for the HGCR-1 comes from the reduction of fuel inventory from 136,800 kg of uranium to 85,390 kg of uranium. This results in both a reduction of capital charges for the first core and a reduction in interest charges on the fuel.

As indicated in Table VIII, the estimated cost of power in mills per kilowatthour is 7.71 for the HGCR-1, 10.32 for the initial GCR-2 design,

Table VIII

Comparison of Operating Cost Estimates for the GCR-2 and HGCR-1

	GCR-2 (Original Design)		GCR-2 (for 1130 Mwe)		HGCR-1	
	Annual Charge, $/yr	Charge, mills/kwhr	Annual Charge, $/yr	Charge, mills/kwhr	Annual Charge, $/yr	Charge, mills/kwhr
Wages (average of $6,000/man-year)	600,000	0.38		0.27	1,200,000	0.16
Supplies (water, lubricants, helium, etc.)	400,000	0.25		0.25	1,000,000	0.13
Maintenance	400,000	0.26		0.26	3,100,000	0.42[a]
Fuel costs						
Fuel replacement fabrication	822,000	0.52			2,740,000	0.37
Fuel reprocessing	423,000	0.28			1,440,000	0.20
Fuel burnup (less Pu credit)	1,590,000[b]	1.01		1.91	7,500,000	1.01
Interest charge on fuel in process	136,000	0.10			495,000	0.07
Interest charge on fuel in core	1,200,000	0.76		0.76	752,000	0.10
Plant cost	71,993,000	6.38	46,920,000	5.92	38,590,000	5.20
Cost of fabrication of initial core	592,000	0.38		0.38	387,000	0.05
Total (mills/kwhr)		10.32		9.75		7.71

a. Major items of remote maintenance are included in this figure.

b. The annual charge for fuel burnup in the GCR-2 is given in ORNL-2500 as $1,310,000/yr or 0.83 mills/kwhr which has been found to be in error.

and 9.75 for the extrapolated GCR-2 design. This would indicate that although additional expense is involved in the use of unclad fuel elements in such items as additional shielding for the cooling system, the containment vessel, and remote maintenance equipment, the net effect is a reduction in power costs due principally to the increased specific power in the core.

To assign any costs on the basis of mills per kilowatthour, therefore, without giving the complete cost picture would not present a very helpful picture concerning the additional costs involved in these systems.

6.2 Cost Reduction Realized from Elimination of Contaminant

The second method of viewing these cost estimates is to itemize those reductions in capital cost and in operating costs which might be made if the contaminant is eliminated from the coolant. Table IX presents this tabulation for the HGCR-1 and PBR. The HGCR-1 is illustrative of a large-scale power plant, and the PBR represents a much smaller design.

6.2.1 Cost Reduction Due to the Elimination of Contaminant from the Coolant of the HGCR-1

The reduction in shielding costs obtained by removing the shielding from the primary cooling loops is estimated to be $2,300,000; it is possible that some of this would have to be replaced as structural concrete, depending upon the proposed plant layout. Half of the cost of the helium storage and cleanup system has been eliminated since the coolant is now not contaminated.

The cost of the spare components has been eliminated. For direct maintenance, it is assumed that repair and partial replacement of items can be performed in place.

The cost of the containment vessel has been listed as a possible reduction; however, the elimination of this item would depend upon the policy of the Atomic Energy Commission and their evaluation of the containment problem. With the removal of the containment would go the additional $1,000,000 required for transmitting the instrument and control signals through the containment wall to the control room.

If the hot cell could be completely eliminated, an additional reduction of $4,400,000 could be obtained. It is quite possible that a smaller hot cell would still be required. The value of the remote operating and viewing equipment was estimated at $2,500,000.

Allowing for indirect costs, escalation, contingency, and design costs, the reduction in capital investment is estimated at $26,738,000. At a charge of 14% per year, this amounts to an annual charge of $3,743,000. If it is assumed that a plant factor of 0.8 can now be obtained due to the absence of remote maintenance, the charge in mills per kilowatthour for the reduction in capital costs is 0.47.

Table IX

Costs Reduction Which Might be Achieved if the Contaminant were Eliminated from the Coolant

Item	HGCR-1	PBR
	Total Cost $	Total Cost $
Capital cost		
Reactor system shielding	2,300,000	126,000
Helium storage and evacuation system	441,000	100,000
Helium cleanup	64,000	14,000
Spare components	900,000	400,000
Instrument and control	1,000,000	500,000
Containment cell	4,122,000	550,000
Hot cell	4,000,000	2,000,000
Hot cell equipment	400,000	400,000
Remote operating and viewing equipment	2,500,000	1,500,000
Total capital costs	15,727,000	3,790,000
Indirect costs (15% at direct costs)	2,359,000	570,000
Sub-total-1	18,086,000	4,360,000
Escalation	2,170,000	523,000
Sub-total-2	20,256,000	4,883,000
Contingency (20% of sub-total-2)	4,051,000	976,000
Design (12% of sub-total-2)	2,431,000	585,000
Total	26,738,000	8,244,000

	Annual Cost $	Charge mills/kwhr	Annual Cost $	Charge mills/kwhr
Operating costs				
Maintenance	2,000,000	0.25	700,000	0.79
Plant costs at 14%/yr	3,743,000	0.47	1,154,000	1.31
Cost attributable to the contaminated coolant		0.72		2.10

The major reduction in operating costs comes from a reduction in the cost of maintenance. Using the maintenance charge for the extrapolated GCR-2 design as the cost of direct maintenance, the possible decrease for the HGCR-1 would be approximately $2,000,000 per year, or 0.25 mills/kwhr for a plant factor of 0.8. The total of 0.72 mills/kwhr represents the cost which might be attributed to the presence of contamination in the coolant for the HGCR-1.

6.2.2 Cost Reduction Due to Elimination of Contaminant from the Coolant of the PBR

The feasibility study for the PBR assumes that decontamination of the system components will be a simple matter, and no provisions have been made for remote maintenance of the system. It is impossible, therefore, to extract costs that are due to contamination in the coolant. In order to complete this comparison, the maintenance and operation philosophy of the HGCR-1 has been applied to the PBR concept, and the figures in Table IX represent a guess concerning the resultant costs.

In the original estimate for the PBR, 1.0 mill/kwhr was estimated as the operating cost chargeable to wages, utilities, supplies, and maintenance. Based on the policy of the HGCR-1 design, the charges of maintenance might include annual charges for labor of $100,000, for spare components of $500,000, and for the disposal of contaminated parts and tools of an additional $500,000. This total of $1,100,000 is equivalent to a charge of 1.24 mills/kwhr. If $100,000 is taken as the annual wages of the operating personnel and $60,000 is allowed for supplies, including make-up helium, the total charge is 1.42 mills/kwhr. These charges have been based on a plant factor of 0.8; for remote maintenance this factor should probably be lowered to allow for the additional "down-time" required for remote operation.

Access to the containment vessel is prohibited during operation of the PBR, and shielding of the reactor and primary circulating system is based on the amount required to permit entrance during shutdown for fuel charging and maintenance operations. The main turbines of the loop are enclosed in localized shielding to permit this work. If decontamination of the primary systems was more difficult than envisioned by the designers of the PBR, it is probable that additional shielding at this point would be required. The outside of the containment vessel has been shielded, but this thickness is based on the shielding of released activity in the vessel resulting from a system rupture and is more than sufficient for regular operation. Since much of this shielding could be eliminated for a noncontaminated coolant, the estimate of the reduction in shielding costs is $126,000.

No additional cost was allowed in the PBR design for the penetration of the containment vessel with control and instrument signals and the tele-monitoring of this information in a control room which is located in an adjacent building. Since the HGCR-1 allowed $1,000,000 for this item, it is supposed that an amount of $500,000 will represent this cost for the PBR.

As with the HGCR-1 estimate, it is doubtful if the cost of the containment cell could be eliminated. Actually, in the PBR design, it comprises the building enclosure for the reactor, and if it were eliminated a charge for additional structural material would have to be substituted. However, to parallel the HGCR-1 figures, its cost of $550,000 is listed as a possible reduction.

No hot cell is included in the cost estimate of the PBR. If one were required only one-half as large as the HGCR-1, its cost would be $2,000,000. The same hot cell equipment would be required for the PBR as for the HGCR-1, at a cost of $400,000.

Remote operating and viewing equipment for the remote maintenance of the PBR has been scaled down from the HGCR-1 design and estimated to be $1,500,000.

The total capital cost for the PBR which might be attributable to contaminant in the coolant is $3,790,000. Adding charges for indirect cost, escalation, contingencies, and design, the total capital cost is approximately $6,444,000.

For an annual cost on capital investment of 14%, the annual charge is $902,000, or a charge of 1.02 mills/kwhr.

If two-thirds, as in the HGCR-1, of the annual maintenance charge which was estimated in this compilation as $1,100,000 is attributed to the presence of the contaminant, then the annual reduction due in maintenance is about $700,000, or 0.79 mill/kwhr, These charges are based on a plant factor of 0.80.

It is important to note that the figure of 1.81 mills/kwhr given as the savings for a noncontaminated system for the PBR is not all included in the charge of 8.07 mills/kwhr given as the total cost of power by the designers of the PBR. Several items listed in this savings are not included in the proposed PBR design, since direct maintenance was considered possible for this reactor. The 1.81 mills/kwhr is the reduced cost which would be achieved if first the design and maintenance philosophy of the HGCR-1 were applied to the PBR, and then a reduction could be made by eliminating the contaminant from the coolant.

6.3 Cost of Remote Maintenance Equipment

In reference to these cost estimates, additional information can be obtained from the Layout and Maintenance Report[44] prepared for the PAR (WCAP 1104 and 1105). In a facility to demonstrate remote maintenance manipulation, a General Mills manipulator was used in conjunction with a mock-up of the main circulating pump. In a list giving the cost of parts, the purchase cost of the manipulator was $35,000. It was proposed that the main plant crane be the principal item of maintenance equipment. This

crane will open the cells, perform limited items of maintenance, and move and position remote manipulators and viewing equipment where they are needed.

In addition to the general manipulating tools, the design and development of certain specialized equipment such as remote automatic welders and positioners were investigated. Detailed cost estimates for these items for various pipe sizes are given in Table X. Development of equipment for the remote plugging of tubes in the steam generators was also investigated. The estimated cost of this equipment, including development costs, was also given.(44) A discussion of remote viewing equipment is also given in Section 4.5 of WCAP 1104.

The cost of remote viewing equipment is discussed in connection with maintenance for the PAR. Viewing systems' costs range from a few dollars for systems of mirrors to $4,000 to $25,000 for television systems (the more expensive systems being either color systems or stereoscopic systems). High density or other shielding windows for direct viewing cost from $85,000 to $150,000 according to this report.

6.4 General Conclusions

Several conclusions may be drawn from this cost analysis.

1. It is not very meaningful to compare even similar-sized systems utilizing clad and unclad fuel elements because, if advantage of each design is to be taken, the power density will be so different as to make two distinct systems.

2. About the only useful result that can be obtained from a detailed cost estimate for a reactor system is to isolate those reductions in costs which might be achieved if the contaminant were eliminated from the coolant.

3. An indication of the range of these cost reductions is obtained by examination of the HGCR-1 cost estimate and an extension of the PBR cost estimate. A decrease of $26,738,000 in capital costs and a reduction of 0.72 mill/kwhr was obtained for the HGCR-1; a decrease of $6,444,000 and a reduction of 1.81 mills/kwhr was obtained for the PBR. These values should be accepted only as an indication of the order of magnitude.

4. A useful compilation for this study is a list of estimated costs of remote maintenance equipment provided by the PAR investigation. Reports concerning this project also discuss the problems of remote procedures and indicate possible solutions which have general applicability.

Table X

Cost of Remote Maintenance Equipment

Item	Direct Material	Installed Cost	Estimated Life (years)	Number of Installed Units
Pipe Welding and Positioning Tools				
16 in. positioner	$ 60,000	$ 69,000	20	4
16 in. positioner console	5,000	5,800	20	1
3 to 4 in. positioner	30,000	34,600	10	2
6 to 8 in. positioner	30,000	34,600	20	2
10 to 12 in. positioner	40,000	46,000	20	2
3 to 12 in. positioner console	10,000	11,600	20	1
1 to 1-1/2 in. positioner cutter	30,000	34,600	5	2
2 to 3 in. positioner cutter	30,000	34,600	5	2
3 to 4 in. cutter	20,000	23,000	10	1
6 to 8 in. cutter	20,000	23,000	10	1
10 to 12 in. cutter	20,000	23,000	10	1
16 in. cutter	40,000	46,000	10	2
2 to 16 in. cutter console	20,000	23,000	20	2
Ultrasonic inspection console	15,000	17,200	20	1
Miscellaneous inspection equipment	15,000	17,200	5	Lot
Welder television system	30,000	34,600	5	3
1 to 1-1/2 in. welder	40,000	46,000	10	2
2 to 3 in. welder	40,000	46,000	10	2
3 to 4 in. welder	10,000	11,600	10	1
6 to 8 in. welder	10,000	11,600	15	1
10 to 12 in. welder	10,000	11,600	15	1
16 in. welder	30,000	34,600	15	2
1 to 16 in. welder console	75,000	86,200	20	3
Auxiliary positioning devices	50,000	57,600	15	Lot
	$680,000	$782,400		
Steam Generator Maintenance Tools				
Flange handling machine	$ 20,000	$ 23,000	20	2
Steam generator manipulator	250,000	287,500	20	2
Plug welder	20,000	23,000	20	3
Tube preparation machine	10,000	11,500	20	3
Plug remover	3,000	3,400	20	1
Leak detector	5,000	5,800	20	1
Vacuum pump	2,000	2,300	20	1
Leak detection cup	3,000	3,400	20	4
10 ton monorail	15,000	17,300	20	1
	$328,000	$376,700		

Table X (continued)

Item	Direct Material	Installed Cost	Estimated Life (years)	Number of Installed Units
Drain Tank Mechanical Seal Tools				
One lot	$ 30,000	$ 30,000	20	Lot
Remote Handling Equipment				
GM manipulator (Model 300)	$ 70,000	$ 80,500	20	4
GM manipulator (Model 500)	80,000	92,000	20	2
GM bridge for Model 500	30,000	34,500	20	1
GM manipulator console	35,000	40,300	20	5
GM manipulator bridge	40,000	46,000	20	4
Bridge track - 1200 ft	48,000	55,200	20	Lot
GM manipulator - special	30,000	34,500	20	2
Argonne Model 8 manipulator	50,000	57,500	20	5
Argonne heavy duty manipulator	32,000	36,800	20	2
20 ton crane	100,000	115,000	20	4
40 ton crane - shielded cab	400,000	460,000	20	1
	$915,000	$1,052,300		
Remote Viewing Equipment				
TV camera system	$ 60,000	$ 69,000	20	10
Periscopes	64,000	73,600	20	4
Portable floodlights	10,000	11,500	20	25
Shielded crane viewing equipment	300,000	345,000	20	Lot
Shielded windows-maintenance bldg.	360,000	414,000	20	24
Shielded windows-steam generator	40,000	59,000	20	4
	$834,000	$972,100		
General Purpose Tools				
Quick disconnect actuator (electric and mechanical)	$ 16,000	$ 16,000	20	8
Impact wrench	2,000	2,000	20	4
Ultrasonic cleaner	50,000	50,000	20	1
	$ 68,000	$ 68,000		

Table X (continued)

Item	Direct Material	Installed Cost	Estimated Life (years)	Number of Installed Units
Hot Machine Shop Facilities				
Low level shop - machine tools	$125,000	$145,000	15	
Low level shop - hand tools	50,000	50,000	10	
Low level shop - benches, etc.	40,000	40,000	15	
High level shop - machine tools	75,000	89,000	10	
High level shop - benches, etc.	10,000	10,000	10	
Auxiliary high level shop - fixtures	15,000	17,000	10	
Decontamination room - tools	15,000	15,000	5	
Decontamination room - fixtures	10,000	12,000	5	
	$340,000	$378,000		

7. RESULTS AND CONCLUSIONS

In connection with this study, a number of specific issues and questions have been raised. These are answered as follows:

7.1 Review the Pertinent Literature on Fission Product Release from Irradiated Fuel Elements and Summarize the Present State of Experimental Work

A review of the pertinent literature on fission product release from irradiated fuel elements indicates that most of the available information is for cylindrical fuel elements consisting of bulk UO_2 with a metal sheath. Information based on this type of fuel is currently being developed for present or proposed power reactor designs. The studies on UO_2 fuel have been made primarily by the Westinghouse Corporation at the Bettis Plant and by the Canadians at Chalk River. The programs at each of these laboratories have been aimed at predicting the pressure build-up due to xenon and krypton released from UO_2 and identifying the variables influencing the release. For unclad reactors, not only is the release of xenon and krypton of interest, but the release of all the fission products should be investigated. Because of the uncertainty in temperature, many of the early estimates of the fission gases' release from UO_2 are questionable, and only recently have more reliable data been obtained. Similar programs to study the release of fission products from UO_2 have recently been started at Battelle Memorial Institute and at ORNL, but meaningful results are not yet available. Fission gas release from UO_2 is currently being studied by the General Electric Company and by the British, but the results of these studies are not generally available.

Fission product release from irradiated fuel other than UO_2 is very preliminary in nature, and until more extensive work is carried out an evaluation of the fission gas release from these fuels cannot be made. Included in these studies are the early work by North American Aviation Company on uranium-graphite mixtures, the GE and ANL work on UO_2 in BeO, the studies of Sanderson and Porter at BMI on uranium-graphite fuel, as well as the British work on the Dragon Reactor. All of these studies are too preliminary to be able to draw any conclusions concerning fission product release from the fuel.

7.2 Assuming Various Fuel Materials, Including Ceramic Fuels and Various Geometries, Estimate Diffusion Coefficients and Calculate Probable Kind and Amount of Activity Due to Leakage from Elements

Some data on the diffusion coefficients of various fission products through AGOT graphite are available; however, data on UO_2 are very sketchy. An upper limit of the contribution due to diffusion out of UO_2 may be obtained by assuming that volatile or gaseous fission products (i.e., cesium, bromine, iodine, krypton, xenon) all diffuse through UO_2 at the same rate. The amount of activity in the primary system of a gas-cooled reactor, calculated on this

basis amounts to about 0.06% of the total activity generated in the fuel or 3×10^{-3} curies/watt of reactor power.

7.3 Determine the Present Capability of Processes for Continuous Removal of Fission Products from Gaseous Coolants

Continuous removal of the noble gases from the circulating stream of a reactor such as the HGCR-1 by the conventional method of adsorption on charcoal is not practical because of the large size of charcoal bed required. The presence of these noble gases, however, does not contribute to the maintenance problem but may increase the magnitude of the hazard due to the possible escape of coolant to the surroundings.

The fission products of primary importance from the standpoint of maintenance are Sr^{90}-Y^{90}, Zr^{95}-Nb^{95}, Cs^{137}-Ba^{137m}, and Ba^{140}-La^{140}. The feasibility of continuously removing these elements at a rate sufficient for direct maintenance of equipment is very questionable due to lack of information on the mechanics of particle formation and deposition. One method of removing particulate activity may be possible; namely, the injection of scavenging solids followed by their removal with cyclone separators and electrostatic precipitators; however, such a method has not been tested.

7.4 On the Basis of Present Removal Techniques Determine the Maximum Allowable Fission Product Leakage to the Primary Coolant

Assuming that continuous processing of the HGCR-1 gas stream is not practical, the activity in the primary system will amount to about 10^7 curies, resulting in a dose rate at the steam generator 10 days after shutdown of about 40 r/hr and in the blower about 20 r/hr. These levels are about a factor of 10^3 above that permissible for direct maintenance. Thus, the tolerable leakage of fission products into the HGCR-1 gas system is 10^4 curies with no processing, assuming uniform deposition.

From the standpoint of reducing the hazard associated with the escape of coolant to the atmosphere, through leakage or rupture of the system, present processing techniques are capable of handling activity levels and types of fission products comparable to those in the HGCR-1 coolant.

7.5 What is the Likelihood of Fission Products Plating-Out on Surfaces of the Primary Gas System?

The deposition of small particles is a well-known phenomenon, and fission products are no exception as has been confirmed by General Electric personnel who have carried out tests in the LITR at Oak Ridge to study the plating-out of fission products in the ducting of a gas-cooled system. In these tests air was passed over a fission product source in the reactor. The air, carrying fission products, was pulled through the ducting to refrigerated carbon traps which caught the fission products that did not

plate-out. Following each test the system was dismantled, the ducting cut up into sections and samples taken from each section. These samples, together with samples from the carbon traps, were analyzed to determine the fraction plating out. Table XI summarizes the results of these tests. These indicate that a relatively small proportion of strontium plated out before it reached the carbon traps, while substantially all of the tellurium and ruthenium was deposited. The behavior of the iodine and barium was quite erratic. It should be pointed out that in a practical case, reactor operating conditions will not be the same as for those in the test; consequently, data in Table XI are not strictly applicable.

Table XI

Plate-Out of Radioisotopes in Ducting and Carbon Traps
(From Reference 30)

	Exit Line %	Top Pipe, Top Bellows, Midriff Line %	Manifold Lead Line and Manifold %	Carbon Traps %	Total Amount Released Normalized to Test III
Test I					
I-131	3.4	8.4	55.5	32.6	4
Ba-140	77	-	3.5	19.5	5
Sr-89	6	-	5.7	88.3	4
Te-132	99	-	0.006	-	-
Ru-103	100	-	-	-	-
Test II					
I-131	2.5	0.3	3.0	91	11
Ba-140	89.4	-	-	10.6	40
Sr-89	17.4	-	-	82.6	9
Test III					
I-131	8.3	0.6	4.1	81.9	1
Ba-140	40	-	-	60	1
Sr-89	3.9	-	-	96.1	1

7.6 On the Basis of Anticipated Developments in Removal Processes, Determine the Maximum Allowable Fission Product Leakage to Primary Coolant Streams

This question cannot be answered.

7.7 Describe the Problems of Operation and Maintenance Which Would be Unique to these Systems and the Additional Costs Incurred

The first part of this question is covered in Section 5. Additional costs of remote maintenance facilities for the HGCR-1 and PBR are estimated to contribute 0.7 and 1.8 mills/kwhr, respectively, to the power costs in these reactors.

7.8 What is the Effect of Decay on the Diffusion of Fission Products Through Fuel Elements of Various Geometries and Composition?

The diffusion of gaseous and volatile fission products out of UO_2 depends primarily on the temperature of the fuel and the decay constant of each particular isotope. As a first approximation the fractional escape of short-lived isotopes (half-lives = 10 minutes to 10 days) by diffusion out of UO_2 at 1000°C is given by,

$$F = 1 \times 10^{-5} \left(\frac{1}{\lambda}\right)^{0.43}$$

where

F = fractional escape of nuclide,

λ = decay constant, sec^{-1},

and for long-lived isotopes (half-lives above 10 days) by,

$$F = 3.5 \times 10^{-5} \left(\frac{1}{\lambda}\right)^{0.33} .$$

For UO_2 at temperatures above 1000°C, the fractional escape of each isotope will be increased by about a factor of from 3 to 4 for each 100°C increase in temperature.

Because of the varying diffusion coefficients of different elements through graphite, no simple relationship can be obtained to show the effect of half-life on the escape of fission products which recoil out of UO_2 and subsequently diffuse out of graphite.

7.9 Determine Areas of Fission Product Removal and Processing Whose Development is Most Vital to any Reactor System Using Unclad Fuel Elements

These areas are discussed in the following section.

8. REQUIRED RESEARCH AND DEVELOPMENT

The very tentative nature of the conclusions reached in this study serves to emphasize the need for more experimental data. In particular, more information is needed concerning the release of fission products from fuels other than UO_2 and matrix materials other than graphite. The disposition of fission products in the gas system must also be known more precisely in order to evaluate the magnitude of problems associated with their presence in the system. The efficiency of methods for removing these fission products from the system, either continuously or just prior to maintenance, is also not known. Research and development programs are needed in each of these particular areas and in other areas before a definitive study of the merits and problems of ceramic-fueled reactors can be made. Recommended programs for providing this needed information are listed below.

8.1 Fission Product Release Studies

The many factors influencing the release of activity from various fuel materials should be investigated. In addition, irradiation tests should establish the long-term irradiation properties of the fuels. Combinations of the uranium oxides, carbides, and other fuels with matrix materials such as graphite or BeO should be investigated.

Studies of release rates should include an investigation of all the activity that escapes from the fuel. Special emphasis should be placed on those nuclei which will create most of the maintenance problems; i.e., Cs^{137}, Ba^{137m}, Ba^{140}, La^{140}, Sr^{90}, and Y^{90}.

Closely associated with the investigation of diffusion coefficients or release rates, a study should be made of the deposition of the activity.

Special coatings for fuel should be studied to determine if all but the long-lived activity can be retained.

The chemistry of the fission products should be investigated. In particular, the use of additives which combine chemically with select fission products as a means of reducing their escape rate should be looked at.

8.2 The Development of Processing Methods

A basic understanding of the mechanics of small particles is needed to characterize the problems which will be encountered in the operation of a reactor with a contaminated gaseous coolant. Knowledge of the behavior of particles is fundamental to the selection and design of fission product removal processes. Solutions to the solids removal problem cannot be pursued until the nature of the problem is better defined.

An extensive program of in-pile loop experiments is necessary. In-pile loops, although seemingly costly, are the only economical source of data that can be extrapolated to the design of reactor systems.

Experiments are needed that feature the integrated study of fission product release, deposition, and terminal decontamination and the way in which these factors are affected by fuel material, materials of construction, temperatures, equipment geometry, coolant flow rate and the nature of the coolant. Isolated studies of release, deposition, and decontamination are valuable, but integrated experiments provide the only reliable information where interdependence of variables is suspect.

Clathrate chemistry, high temperature glass filters, and molecular sieves should be investigated for their application to side-stream processing. The replacement of the presently proposed coolant purification complex with a process of improved simplicity and reliability would be desirable.

In general, a well-integrated program is needed to determine what comes out of fuel, its location in the loop, methods for limiting activity build-up in the primary system, and feasible methods of removing activity.

8.3 Investigation of Remote Maintenance Techniques

8.3.1 Remote Welding

A long range program is needed to develop satisfactory equipment to make sound welds remotely and then inspect these welds to the satisfaction of the applicable code specifications. This program should be concerned with developing specialized positioning and welding equipment and also with investigating the possibilities of using remote manipulators to perform many of the welding operations.

Also, methods of inspecting these welds must be developed to enable the operator to completely inspect the weld with a high radiation background. This program should investigate such methods as ultrasonic testing, dye-penetrant, eddy-current, and others which might be useful in the radiation field. The test program must demonstrate that the equipment is capable of making and inspecting welds to the satisfaction of ASME and state piping and pressure vessel codes.

8.3.2 Helium Blowers

The economic incentive to develop satisfactory shaft seals for uncanned motor-blower units has been discussed previously. A number of companies are presently working on these seals, and this work should be continued so long as the results are promising. These seals not only must satisfactorily retain the helium in the primary system, but they must also be resistant to radiation damage from the fission product decay. In some blower designs the

bearings and seals are oil-cooled; if such designs are to be used in contaminated systems the oil used must also be resistant to gamma radiation damage. Perhaps a more attractive solution would be to use dry shaft seals so that the radiation stability of the oil is not a problem, or use water.

8.3.3 Remote Manipulating Equipment

The feasibility of remote maintenance depends largely on the successful development of remote manipulators capable of handling large equipment. Alternative approaches involve the use of large, versatile devices for performing many remote operations or smaller, highly specialized machines built for relative merits of these two approaches.

9. REFERENCES

1. Cottrell, W. B., et al., "The HGCR-1, A Design Study of a Nuclear Power Station Employing a High-Temperature Gas-Cooled Reactor with Graphite-UO_2 Fuel Elements," ORNL-2653, July 1959.

2. General Atomics, "High Temperature Gas-Cooled Graphite-Moderated Power Station," GA-593, GACP-595, GA-598, General Atomics, San Diego, California, November 1958.

3. Sanderson and Porter, "Design and Feasibility Study of a Pebble Bed Reactor - Steam Power Plant," S & P 1963, May 1958. (See also Progress Reports, Pebble Bed Reactor Program, S & P 1963 A-11, NYO-2373.)

4. Blomeke, J. L., "Uranium-235 Fission-Product Production as a Function of Thermal Neutron Flux, Irradiation Time, and Decay Time," ORNL-2127, Pt. 1, Vol. I and II, August 1957.

5. Young, C. T., et al., "Preliminary Experiments on Fission Product Diffusion from Uranium-Impregnated Graphite in the Range 1800°C-2200°C," NAA-SR-232, March 1953.

6. Eichenberg, J. D., et al., "Effects of Irradiation on Bulk UO_2," WAPD-183, October 1957.

7. Belle, J., et al., "Diffusion and Solubility of Rare Gases in UO_2," Geneva Conference Paper 1013, June 1958.

8. Robertson, J.A.L., et al., "Behavior of Uranium Oxide as a Reactor Fuel," Geneva Conference Paper 193, June 1958.

9. Rough, F. A., et al., "Irradiation of Uranium Monocarbide," Trans. ANS 2, No. 1, June 1959.

10. Smith, C. A. and Young, C. T., "Diffusion of Fission Fragments from Uranium-Impregnated Graphite," NAA-SR-72, 1951.

11. Doyle, L. B., "High Temperature Diffusion of Individual Fission Elements from Uranium Carbide-Impregnated Graphite," NAA-SR-255, September 1953.

12. Cubicciotti, D. D., "The Diffusion of Xenon from Uranium Carbide-Impregnated Graphite at High Temperatures," NAA-SR-194, October 1952.

13. Cowan, G. A. and Orth, C. J., "Diffusion of Fission Products at High Temperatures from Refractory Matrices," Geneva Conference Paper 613, June 1958.

14. Sanderson and Porter, "Pebble Bed Reactor Program, Progress Report for the Period February 1 to March 15, 1959," S & P 1963 A-11.

15. Carlsen, F. L., Jr., private communication to J. L. Scott, July 1959.

16. Cottrell, W. B., et al., "Release of Fission Products from UO_2," ORNL CF-59-6-3, June 1959.

17. Booth, A. H., and Rymer, G. T., "Determination of the Diffusion Constant of Fission Xenon in UO_2 Crystals and Sintered Compacts," CRDC-720, August 1958.

18. Booth, A. H., "A Method of Calculating Fission Gas Diffusion from UO_2 Fuel and Its Application to the X-2-f Loop Test," CRDC-721, September 1957.

19. ORNL Staff, "The ORNL Gas-Cooled Reactor Advanced Concepts," ORNL-2510, June 1958.

20. Sanderson and Porter, "Progress Report, Pebble Bed Reactor Program," NYO-2373.

21. ORNL Staff, "Review of High-Temperature Gas-Cooled Reactor Proposed by Philadelphia Electric, General Atomic, and Bechtel," January 1959.

22. Green, H. L. and Lane, W. R., "Particulate Clouds, Dusts, Smokes and Mists," Spon Ltd., 1957.

23. Silverman, L., et al., Iodine Collection Studies, Harvard School of Public Health, Department of Industrial Hygiene.

24. Browning, W. E., et al., "Removal of Fission Product Gases from Reactor Off-Gas Streams by Adsorption," ORNL CF-59-6-47, June 1959.

25. "One-Step Separation and Purification of Helium from Natural Gas," Chemical Week, Vol. 82, No. 20, p. 59, May 17, 1958.

26. "Molecular Sieve Adsorption Data," Technical Bulletins, Linde Air Products Company, Tonawanda Research Laboratory, Tonawanda, New York.

27. Powell, H. M., Recueil des Travaux Chimiques des Pays - Bas, Vol. 75, pp. 885-890, 1956.

28. Liquid Metals Handbook, NAVEXOS P-733 (Rev.).

29. "UKAEA-ENEA High Temperature Gas-Cooled Reactor," ATRS/Conf./6.

30. Cohn, P. K., et al., "Isotope Deposition Hazards in Gas Cycle Reactors," presented at Gatlinburg Meeting of the American Nuclear Society, Paper No. 24-7, June 1959.

31. Hammond, R. P. and Cody, J. P., "A Preliminary Study of the Turret Experiment, An Operating Test of Unclad Fuel at High Temperature," LA-2303, April 1959.

32. Sadowski, G. S., "Decontamination of Processing Plants," Nucleonics, Vol. 15, No. 3, p. 68, 1957.

33. McDuffee, W. T., "Thorex Process: Demonstration of Feasibility of Use of Steam Jets in Internal Decontamination of Vessels," ORNL CF-54-2-101, February 1954.

34. Bennett, M. R., "Evaluation of Reagents of the Decontamination," ORNL CF-51-11-23, November 1951.

35. Baybarz, R. D., "Decontamination of a Homogeneous Reactor," ORNL CF-57-9-59, September 1957.

36. Parrott, J. R., "Evaluation of the Turco 4501 Process for the Decontamination of the Thorex Dissolver," ORNL CF-59-1-23, January 1959.

37. McCorkle, K. H. and Winsbro, W. R., "Decontamination of the ORNL Thorex Pilot Plant," ORNL-2058, July 1958.

38. "PAR Project, Layout and Maintenance," WCAP-1104, March 1959.

39. Beall, S. E. and Jurgenson, R. W., "Direct Maintenance Practices for the Homogeneous Reactor Test," ORNL CF-58-4-101, April 1958.

40. Engineering and Mechanical Division, Oak Ridge National Laboratory, "Remote Maintenance Tools Catalog," ORNL CF-58-6-83, June 1958.

41. McDonald, W. B., et al., "Remote Maintenance Experimental Work on a Reactor System Pump," ORNL CF-58-4-93, April 1958.

42. Tennessee Valley Authority, "Gas-Cooled Nuclear Power Reactor Review," October 1958 (unpublished).

43. Robinson, G. C., Reactor Projects Division, ORNL, personal communication.

44. "PAR Project, Layout and Maintenance," WCAP-1105, Pt. 2, March 1959.

45. ORNL Staff, "The ORNL Gas-Cooled Reactor Materials and Hazards," ORNL-2505.

46. Fraas, A. P., "Preliminary Designs for Two Integrated Gas-Cooled Reactor Core and Steam Generator Units," ORNL-2752 (to be published).

47. ORNL Staff, "The ORNL Gas-Cooled Reactor," ORNL-2500.

48. Suddath, J. C., Chemical Technology Division, ORNL, private communication.

49. Johnstone, H. F., "Study of the Fundamental Properties of Aerosols," TID-7551, p. 108, 1958.

INTERNAL DISTRIBUTION

1. G. M. Adamson, Jr.
2. W. A. Albrecht
3. L. G. Alexander
4. P. R. Amman (Y-12)
5. E. D. Arnold
6. S. E. Beall
7. E. G. Beasley
8. R. J. Beaver
9. M. Bender
10-15. L. L. Bennett
16. D. S. Billington
17. R. E. Blanco
18. E. P. Blizard
19. A. L. Boch
20. E. G. Bohlmann
21. B. S. Borie
22. C. J. Borkowski
23. G. E. Boyd
24. E. J. Breeding
25. J. C. Bresee
26. R. B. Briggs
27. K. B. Brown
28. W. E. Browning
29. F. R. Bruce
30. O. W. Burke
31. F. L. Carlsen
32. C. E. Center (K-25)
33. R. A. Charpie
34. R. D. Cheverton
35. H. C. Claiborne
36. T. E. Cole
37. J. A. Conlin
38. J. H. Coobs
39. W. B. Cottrell
40. J. H. Crawford, Jr.
41. G. E. Creek
42. F. L. Culler
43-46. H. N. Culver
47. J. E. Cunningham
48. T. K. DeBoer
49. J. H. DeVan
50. L. M. Doney
51. D. A. Douglas
52. J. C. Ebersole
53. W. K. Eister
54. L. B. Emlet (K-25)
55. L. G. Epel
56. E. P. Epler
57. W. K. Ergen
58. R. B. Evans
59. H. L. Falkenberry
60. D. E. Ferguson
61. M. H. Fontana
62. J. Foster
63. J. L. Fowler
64. T. B. Fowler
65. A. P. Fraas
66. J. H. Frye, Jr.
67. W. R. Gall
68. G. A. Garrett (K-25)
69. D. R. Gilfillan
70. H. E. Goeller
71. J. M. Googin (Y-12)
72. B. L. Greenstreet
73. A. T. Gresky
74. C. D. Griffies
75. W. R. Grimes
76. A. G. Grindell
77. E. E. Gross
78. E. Guth
79. J. P. Hammond
80. R. L. Hammer
81. R. F. Hibbs (Y-12)
82. T. Hikido
83. H. W. Hoffman
84. A. Hollaender
85. A. S. Householder
86. R. Huntley
87. S. Jaye
88. W. H. Jordan
89. P. R. Kasten
90. G. W. Keilholtz
91. C. P. Keim
92. V. J. Kelleghan
93. M. T. Kelley
94. J. J. Keyes
95. L. J. King
96. R. B. Korsmeyer
97-102. J. A. Lane
103. C. F. Leitten
104. S. A. Levin
105. W. H. Lewis
106. M. P. Lietzke
107. R. B. Lindauer

108. R. S. Livingston
109. R. N. Lyon
110. H. G. MacPherson
111. W. D. Manly
112. E. R. Mann
113. L. A. Mann
114. H. C. McCurdy
115. W. B. McDonald
116. H. F. McDuffie
117. R. A. McNees
118. F. R. McQuilkin
119. A. J. Miller
120. K. Z. Morgan
121. E. J. Murphy
122. J. P. Murray (Y-12)
123. F. H. Neill
124. M. L. Nelson
125. C. W. Nestor
126. L. G. Overholser
127. G. W. Parker
128. A. M. Perry
129. C. A. Preskitt
130. B. E. Prince
131. M. E. Ramsey
132. P. M. Reyling
133. G. C. Robinson
134. M. Rosenthal
135. T. Rowe
136. A. F. Rupp
137. G. Samuels
138. J. P. Sanders
139. H. W. Savage
140. A. W. Savolainen
141. J. L. Scott
142. E. D. Shipley
143. A. J. Shor
144. O. Sisman
145. M. J. Skinner
146. G. P. Smith, Jr.
147. A. H. Snell
148. I. Spiewak
149. E. Storto
150. R. D. Stulting
151. J. C. Suddath
152. C. D. Susano
153. J. A. Swartout
154. E. H. Taylor
155. D. G. Thomas
156. M. Tobias
157. D. B. Trauger
158. J. W. Ullmann
159. W. E. Unger
160. D. R. Vondy
161. E. Von Halle (K-25)
162. C. S. Walker
163. J. L. Wantland
164. G. M. Watson
165. H. O. Weeren
166. A. M. Weinberg
167. J. C. White
168. E. A. Wick
169. G. C. Williams
170. C. E. Winters
171. M. M. Yarosh
172. J. Zasler
173-176. ORNL - Y-12 Technical Library, Document Reference Section
177-216. Laboratory Records Department
217. Laboratory Records, ORNL R. C.
218-219. Central Research Library

EXTERNAL DISTRIBUTION

220. C. M. Copenhaver, Lincoln Laboratories, Mitre Corp., Lexington, Mass.
221-230. Division of Research and Development, AEC, ORO (H. M. Roth)
231-807. Given distribution as shown in TID-4500 (15th Ed.) under Reactors-Power category (75 copies - OTS)