4

CENTRAL RESEARCH LIBRARY
DOCUMENT COLLECTION

MARTIN MARIETTA ENERGY SYSTEMS LIBRARIES
3 4456 0351182 1

ORNL-2794
Instruments

A MAGNETIC CORE CIRCUIT FOR THE RELIABLE PRODUCTION OF SINGLE PULSES FROM CONTACTS

R. J. Klein

CENTRAL RESEARCH LIBRARY
DOCUMENT COLLECTION
LIBRARY LOAN COPY
DO NOT TRANSFER TO ANOTHER PERSON
If you wish someone else to see this document, send in name with document and the library will arrange a loan.

OAK RIDGE NATIONAL LABORATORY
operated by
UNION CARBIDE CORPORATION
for the
U.S. ATOMIC ENERGY COMMISSION

Printed in USA. Price $1.50. Available from the

Office of Technical Services
Department of Commerce
Washington 25, D.C.

LEGAL NOTICE

This report was prepared as an account of Government sponsored work. Neither the United States, nor the Commission, nor any person acting on behalf of the Commission:

A. Makes any warranty or representation, expressed or implied, with respect to the accuracy, completeness, or usefulness of the information contained in this report, or that the use of any information, apparatus, method, or process disclosed in this report may not infringe privately owned rights; or

B. Assumes any liabilities with respect to the use of, or for damages resulting from the use of any information, apparatus, method, or process disclosed in this report.

As used in the above, "person acting on behalf of the Commission" includes any employee or contractor of the Commission, or employee of such contractor, to the extent that such employee or contractor of the Commission, or employee of such contractor prepares, disseminates, or provides access to, any information pursuant to his employment or contract with the Commission, or his employment with such contractor.

ORNL-2794

Contract No. W-7405-eng-26

INSTRUMENTATION AND CONTROLS DIVISION

A MAGNETIC CORE CIRCUIT FOR THE RELIABLE PRODUCTION OF SINGLE PULSES FROM CONTACTS

R. J. Klein

DATE ISSUED

OCT 16 1959

OAK RIDGE NATIONAL LABORATORY
Oak Ridge, Tennessee
operated by
UNION CARBIDE CORPORATION
for the
U.S. ATOMIC ENERGY COMMISSION

MARTIN MARIETTA ENERGY SYSTEMS LIBRARIES

3 4456 0351182 1

TABLE OF CONTENTS

SECTION	PAGE
INTRODUCTION	1
SHORT CURRENT PULSES FROM CLOSING CONTACTS	5
Initial Contact Current	5
Anode Arc	9
Cathode Arc	10
Unstable Breakdowns	11
Determination of I_c	13
EFFECT OF IMPERFECT CORE MATERIAL	19
Output Signal Integrator	22
Calculation of Integrator Attenuation	23
Selection of Integrator Time-Constant	29
OTHER CIRCUIT CONSIDERATIONS	30
Power Supply Decoupling	30
Complete Circuit	31
Output Polarity	33
Test Results	34
CONCLUSIONS	38
LIST OF SYMBOLS	40
REFERENCES	42
APPENDIX	43

LIST OF FIGURES

FIGURE		PAGE
1.	Basic Switch-Core Circuit	2
2.	Typical Current Waveform Generated By Closing Contacts	6
3.	Core Output Pulses With Transient Breakdown At Contacts	7
4.	Load Voltage As Contacts Close	12
5.	Equipment For Determining I_c For Various Contact Materials	14
6.	Unstable Breakdown Performance Of Common Contact Metals	16
7.	Comparison Of Waveforms In Switch-Core Circuit	20
8.	Hysteresis Loops For S-3 Ferrite	21
9.	Typical Core Output Waveform With Half-Sine Wave Shown For Comparison	24
10.	Single Stage RC Integrator Circuit	25
11.	Time At Which Peak Value of e_o Occurs	27
12.	Voltage Attenuation Curve Of Integrator Circuit	28
13.	Complete Switch-Core Circuit	32
14.	Example Of Complete Switch-Core Circuit	36
15.	Output Waveform From Test Circuit	37

INTRODUCTION

Some electronic circuitry used in computers, nuclear physics instrumentation, and elsewhere, utilizes very short electrical pulses. Individual pulses of less than one microsecond duration are registered by these circuits and spurious pulses are intolerable in most applications. Often control signals for these high speed circuits must be provided by the mechanical motion of switch contacts. The waveforms of current and voltage produced by contact closures is usually very irregular, and many individual pulses may be produced by a single closure.

If a single electrical impulse must be produced for each actuation of the contacts, special means must be employed to filter one pulse from the irregular contact signal. The methods in common use rely on the filtering action of an electronic bi-stable or mono-stable multivibrator,[1] special mercury filled relays, or network filters. While each of these systems may be satisfactory under certain conditions, none is a general approach to the problem. Multivibrators require rather expensive active circuitry. Special relays employ mercury wetted contacts in high pressure enclosures and are therefore expensive and position sensitive. Linear network filters have a dependence of output signal on input waveform which makes the output signal undependable when the input waveform is unpredictable.

The magnetic core circuit shown in Fig. 1 has been suggested for use in this application.[2] This approach takes advantage of the fact that, when saturated, a magnetic material which has a rectangular hysteresis loop undergoes very little flux change when a magnetomotive force, similar

UNCLASSIFIED
ORNL-LR-DWG 37509

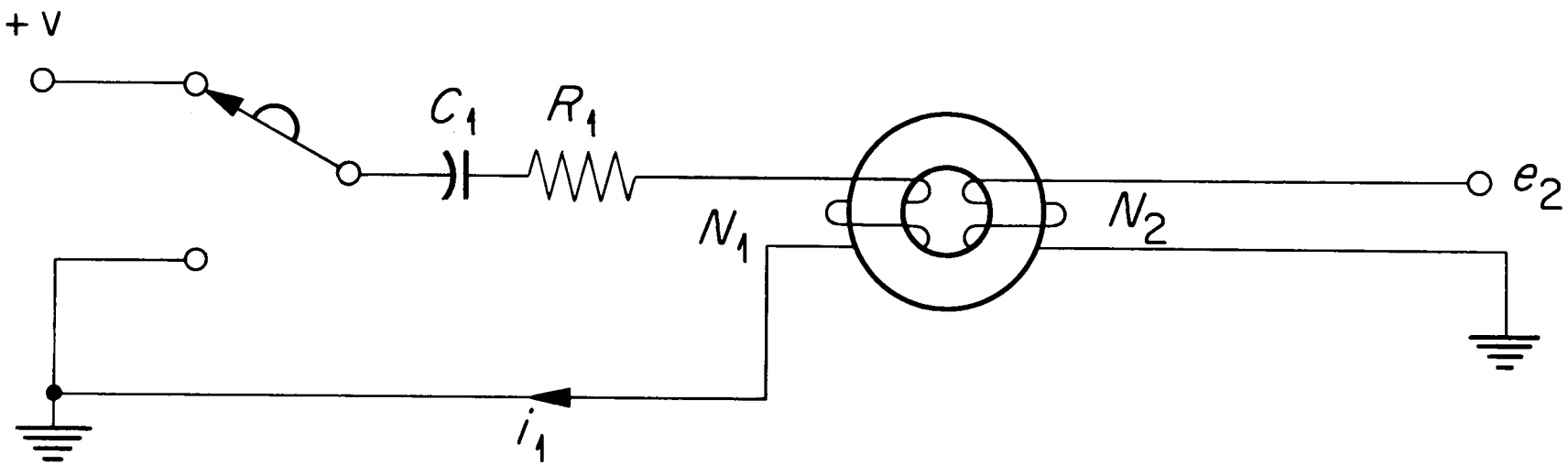

Fig. 1. Basic Switch Core Circuit.

to that which caused saturation, is applied or removed. Ideally, when the switch in Fig. 1 is actuated, the condenser C_1 discharges through the primary winding of the core causing complete reversal of the magnetic saturation polarity on the first switch bounce. Later bounces would cause no further flux change so the output signal, e_2, would consist of one pulse. When the switch is allowed to return to its normal state, C_1 recharges to voltage V through the primary winding, resetting the core flux to its original polarity of saturation. In reality the hysteresis loop of the core is not exactly rectangular, and the first current pulse from the switch contacts may not last long enough to fully reverse the magnetization of the core.

The purpose of this thesis is to present the results of an investigation of these and other factors which control the reliability of this approach. The two most troublesome sources of unreliability, unstable breakdown currents between the contacts and the departure from rectangularity of the magnetic core material, are treated in separate sections. Some general problems of design and layout are discussed in the next section. The conclusions are presented in the last section.

It is shown that the difficulties may be overcome by a suitable choice of parameters and slight additional circuitry. Tabulated data are presented which may be useful in circuit design.

The magnetic core circuit which resulted from this investigation should prove to be a highly successful solution to the problem of obtaining single electrical pulses from the actuation of contacts. It is

passive, relatively inexpensive, and can be made extremely reliable. The small physical size of its components fits the modern trend toward miniaturization of electronic equipment.

SHORT CURRENT PULSES FROM CLOSING CONTACTS

The switch-core circuit of Fig. 1 was first designed without regard for any special contact operating conditions. It was hoped that the mechanical inertia of the contact mass would insure a first bounce duration considerably longer than the time, τ_s, required for magnetic flux reversal of the core. While it was found that for even very low mass contact assemblies, the period of the first mechanical bounce exceed 10 μsecs, which is several times the usual τ_s, reliable single output pulses were not produced. Instead of the first current pulse of about 10 μsecs duration which was expected, often short pulses of current were observed before metal-to-metal contact was established. A typical current waveform is shown in Fig. 2. These current pulses partially switch the core flux and result in several short output voltage pulses as shown in Fig. 3(b) and 3(c) instead of the desired single pulse of Fig. 3(a).

In order to understand the origin of these short current pulses it is necessary to consider the physical events which take place as charged metallic contacts close.

INITIAL CONTACT CURRENT

The first indication that oppositely charge metallic contacts are approaching each other is a very weak current which is the result of field emission electrons from the cathode surface.[3,4,5] The actual electric field strength at the microscopic irregularities on the cathode surface is considerably greater than the gross field, F, at the smooth areas on the surface. If E is the voltage across the contacts and d is contact separation

0412

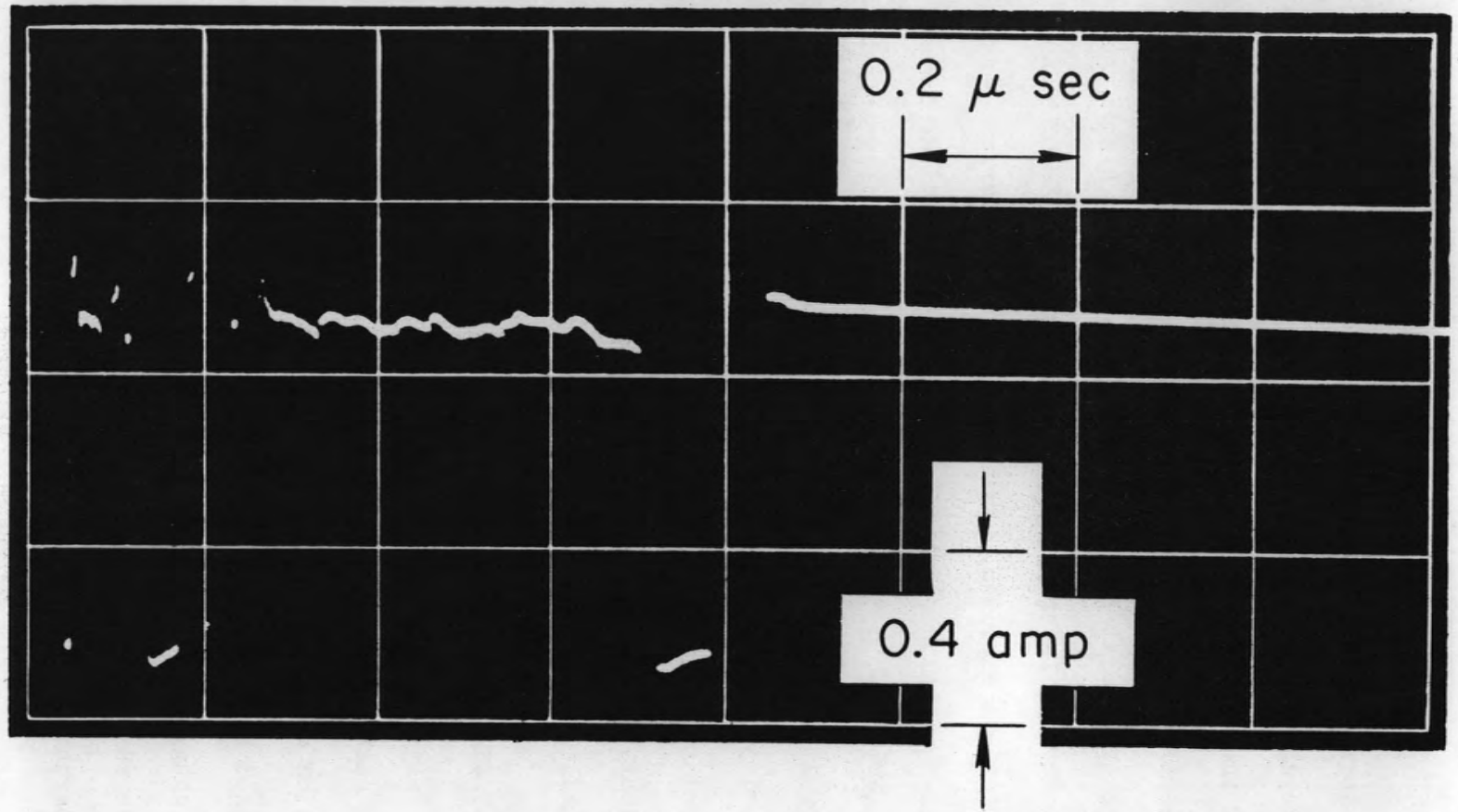

Fig. 2. Typical Current Waveform Generated by Closing Contacts.

UNCLASSIFIED
ORNL-LR-DWG 37506

0529

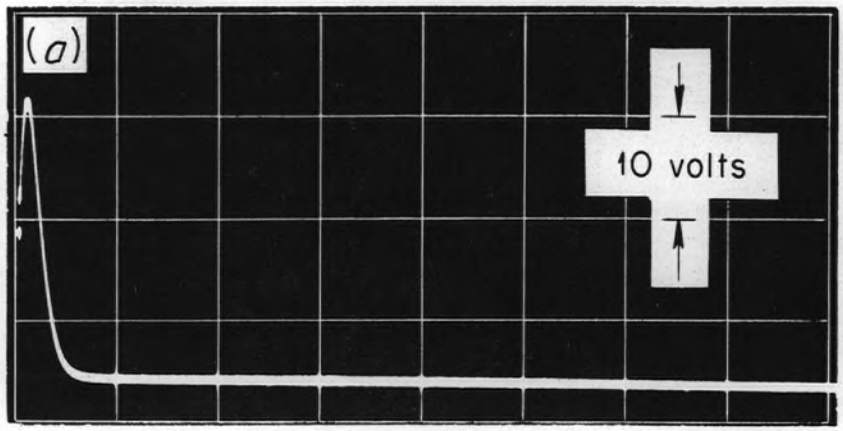

0523

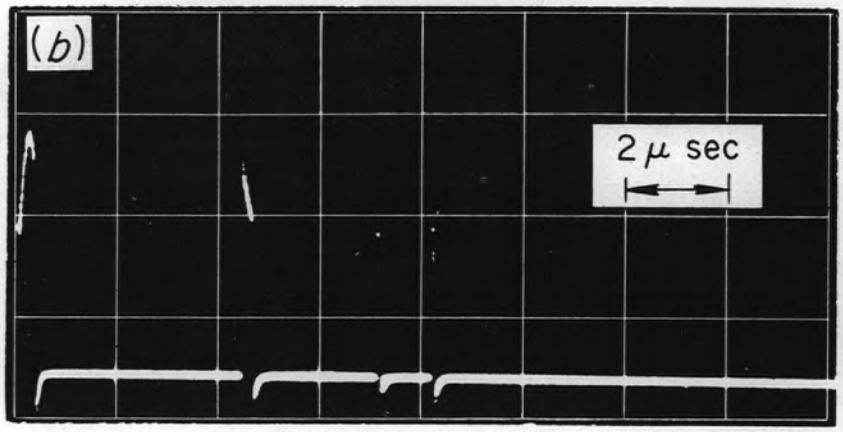

0522

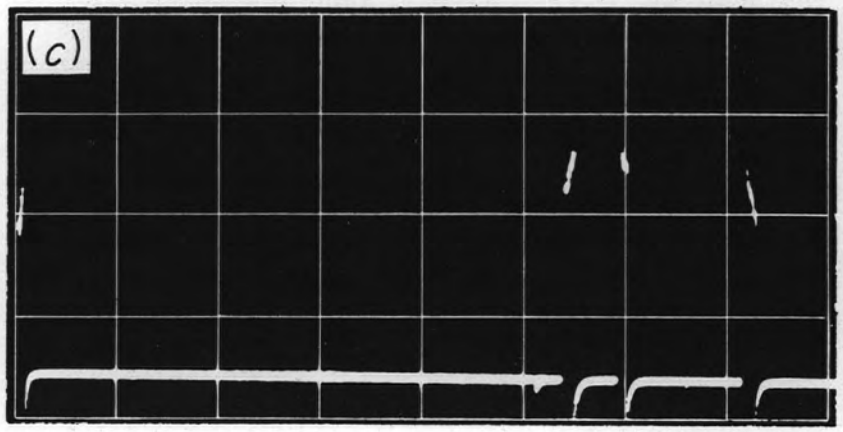

Fig. 3. Core Output Pulses with Transient Breakdown at Contacts.

$$F = \frac{E}{d}. \tag{1}$$

The actual field at the peak of an irregularity is enhanced by a factor β, which is related to the geometry of the irregularity and the electrode spacing. Boyle, et. al.[6] have reported enhancement factors up to 30 at the peak of certain irregularities. This factor is diminished rapidly as the contact separation is reduced but the gross field increases as the separation decreases. The net effect is an increase in field strength in all areas as the separation is reduced, but very high fields may be present at irregularities even at comparatively wide contact spacing.

Field emission current is a very sensitive function of field strength.[4] The fact that β is greatest at the peak of the usual mound shaped irregularity and diminishes down the side of the mound means that the current which flows due to field emission will originate almost completely from the peak of one cathode mound.[6] The emitting area is therefore extremely small, between 10^{-10} and 10^{-13} cm^2 for several irregularities measured on tungsten electrodes.[6]

The strength of the electric field required to produce a significant current depends upon the electrode material and the cleanliness of the surface. For badly contaminated silver surfaces, fields as low as 0.5×10^6 V/cm may be sufficient to produce currents near 10^{-8} amperes, while for clean tungsten, 30×10^6 V/cm may be required.[5] Thus under different conditions the actual separation at which field emission current reaches a given value can vary between wide limits.

Heat is generated by resistive effects within the cathode irregularity because the current density from this small emitting area is very

great even at modest values of total current. The anode electrode is also heated as the field emission electrons strike its surface, releasing the energy they acquire from the potential drop across the gap.

ANODE ARC

If a substantial current flows only after the electrode separation is reduced to a very small value comparable with the mean-free-path of an electron in air (0.5 micron), the bombarded area on the anode is essentially equal to the emitting area of the cathode. In this case the heating at the anode is much greater than that at the cathode as the same number of electrons flow in each, but the voltage drop across the gap is usually much higher than that within the mound shaped cathode irregularity so the electrons loose much more energy upon striking the anode than within the cathode.

The current increases as the electrode separation is reduced until at some point the anode heating reaches the melting point of the metal. When atoms of the anode material are released into the gap, the electrons streaming from the cathode ionize some of them. The positive ions are then drawn toward the cathode by the field. The approach of these ions intensifies the field at the cathode, increasing the field emission current. This regenerative process leads to complete breakdown and arc formation when the ionic enhancement of cathode field current reaches about 65%.[6] Thus when the field emission current from the cathode with ionic space charge is 1.65 times the current which would flow without space charge, breakdown occurs and the current which flows within the

gap is then limited only by the external circuit. The voltage across the gap immediately drops to a value slightly larger than the ionization potential for the electrode metal used.

Immediately after breakdown, the particle density in the arc is extremely high. A very rough approximation places the pressure within the arc at over 600 atmospheres.[6] The diameter of the arc is thus forced to increase rapidly by its own internal pressure, until at some point this pressure is balanced by magnetic containing forces. In order to maintain the arc, the current density at the anode must not be allowed to fall below that required to produce boiling of the metal. It has been shown that the current required to sustain an anode arc in palladium is about 100 times the current required to initiate it.[4]

CATHODE ARC

If the cathode base metal or surface condition will allow significant field emission current at the low gross field strength which may be obtained at electrode separations which are larger than about 0.5 microns, the electrons are dispersed by interactions with air molecules. Thus the bombarded area on the anode is no longer equal to the emitting cathode area, but may be much larger. The temperature rise of this large anode area will be less than that of the emitting point on the cathode surface for a given current. Again at some value of field current melting occurs, but this time atoms of cathode material are projected into the gap. The result is very similar to the previously mentioned breakdown in that the atoms within the gap are ionized by the electron stream.

Breakdown is reached when these positive ions enhance the cathode field current as before. Sustaining this arc now depends upon maintaining sufficiently high current density at the cathode to continue boiling the cathode material over an area which increases with time until the arc stabilizes. Again the ignition current of the breakdown is much less than the current required to maintain the arc.[5]

UNSTABLE BREAKDOWNS

The reason for the short current pulses of Fig. 2 is now clear. The external circuit resistance was not low enough to maintain the required current density after an arc started between the closing contacts. In some cases, many arcs would be started by field emission current and would blow themselves out before the contacts touched the first time. Fig. 4 shows the effect of increasing the circuit current. In Fig. 4(a), the primary current, i_1, is considerably less than the minimum arc sustaining current, I_c. Several short pulses caused by unstable breakdowns will be noticed. As i_1 is increased the arc does not extinguish immediately, but does stop and start again before actual metallic contact is established at about the 0.6 μsec marker of Fig. 4(b).

It will be noted that even after i_1 exceeds I_c, two conditions may exist during the first few microseconds after breakdown occurs. The arc with its accompanying 10 to 15 volt drop may last for a time comparable with the core switching time, τ_s, as in Fig. 4(c), or the arc may be followed almost immediately by actual contact closure as in Fig. 4(d). Thus a certain amount of variation in the primary current and consequently

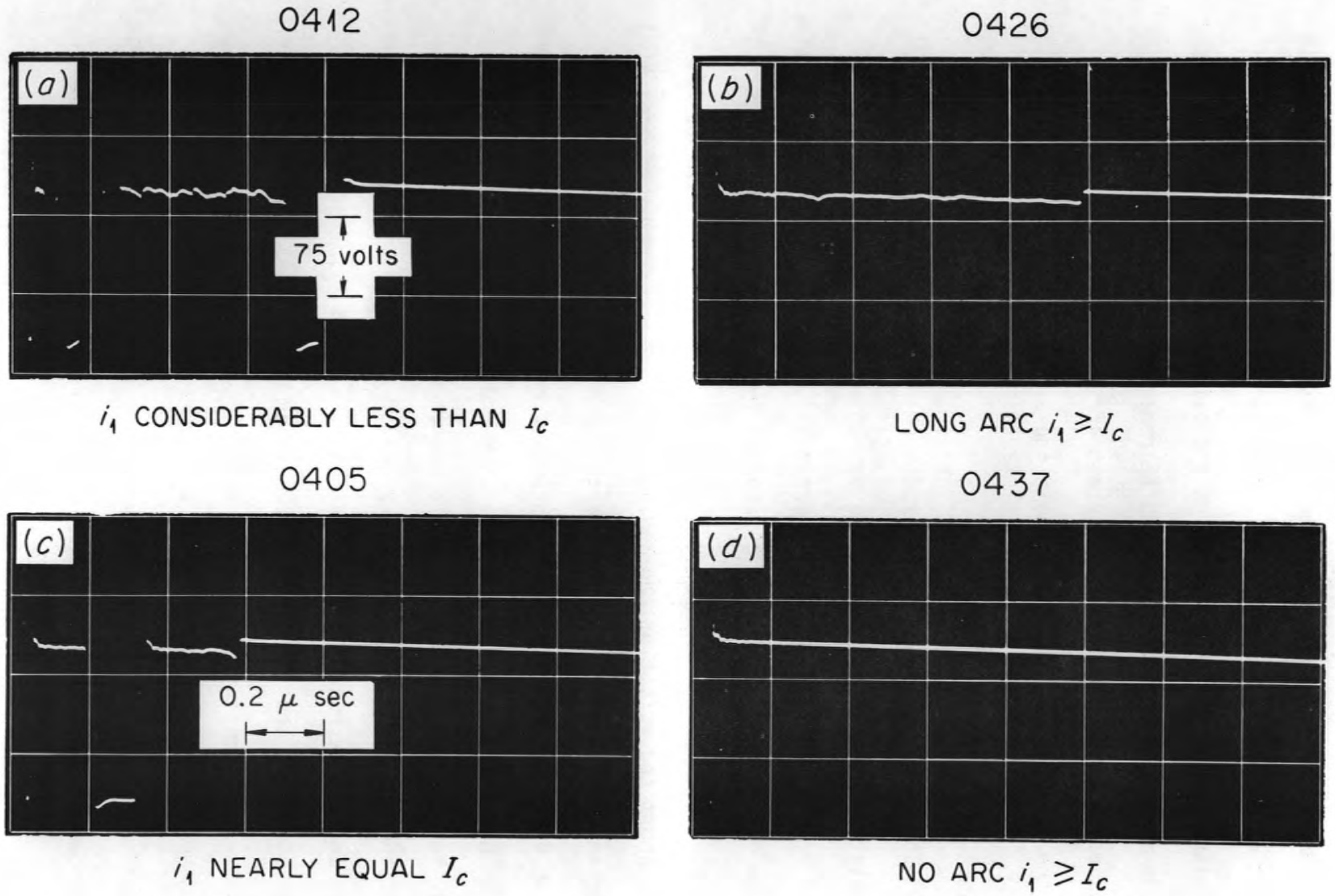

Fig. 4. Load Voltage as Contacts Close.

in the core output pulse was noticed even when no unstable breakdown occurred. If the supply voltage, V, was large with respect to the 15 volt uncertainty in contact drop, this variation of output pulse amplitude was confined to less than 10%. It is not advisable to use a supply voltage in excess of 300 volts however, as this is near the minimum sparking potential for air.[4] Voltages of this order can cause an unstable glow-discharge breakdown in air between the contacts, which again produces false output pulses and result in unreliable operation. Voltages from 100 to 200 volts worked best.

DETERMINATION OF I_c

Tests were conducted on commonly used contact materials in an effort to determine the minimum circuit current, I_c, which would produce no unstable current pulses, at least for an initial period exceeding the longest core switching times which were expected. A period of 5 μsec was chosen as a reasonable upper limit to the magnetic core switching times for the ferrite cores which by reason of size and economy seem well suited to this application.

The equipment indicated in Fig. 5 was used to obtain data on unstable breakdowns which occured in various contact materials while they were operated by a low speed motor drive.

A timed stepping relay automatically changed the series resistance in the contact circuit after a fixed number of operations of the test contacts. A separate mechanical register was used to record the number of faulty operations which resulted from each value of series resistance. Knowing the resistance and supply voltage, the contact

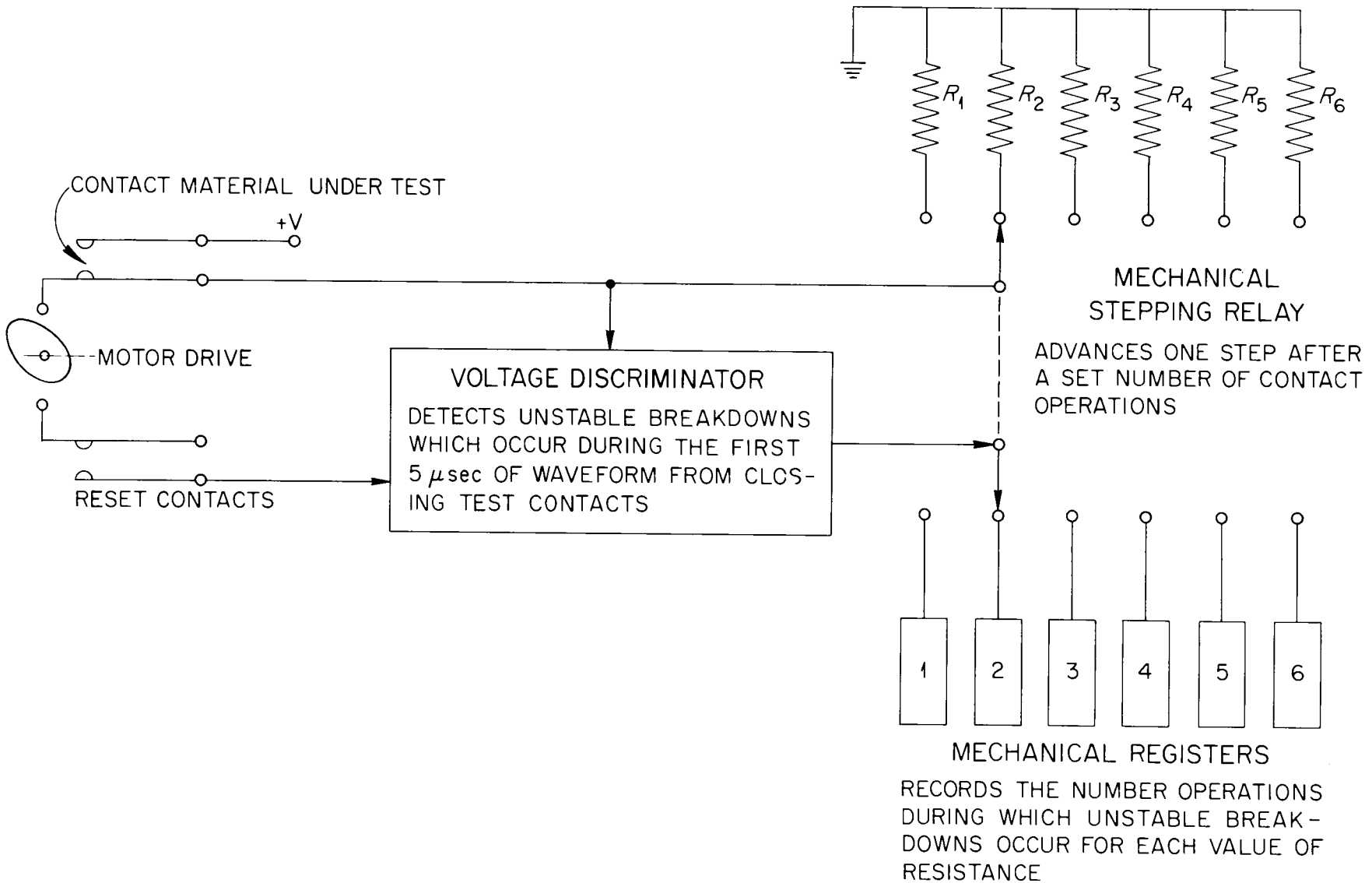

Fig. 5. Equipment for Determining I_c for Various Contact Materials.

current was determined. As long as the supply was between about 50 and 300 volts as previously mentioned, the data seemed to be nearly independent of this voltage.

The results were fairly consistent with the main variations arising from surface conditions which were related to cleanliness. Freshly cleaned contacts have more faulty operations per thousand operations at a given current than aged or dirty contacts. The reasons for the ease of establishing and maintaining an arc between contaminated contacts have been studied by Germer in considerable detail.[7] All of the materials which he tested arced at lower fields when they were contaminated.

Fig. 6 is a plot of some of the data obtained with common contact metals. Each point represents an average of about 10,000 contact operations which were run at different times and with different conditions of contact surface. The curves seem to indicate that the probability of the occurrence of an initial current pulse shorter than 5 μsecs may be made as small as desired by increasing the contact current. An example of the effect of shortening the sensitive period from 5 usecs to 2 usecs may be seen in the curves for palladium. In this case, if one unstable breakdown in 10,000 operations is an acceptable figure, about 1.6 amps of contact current would be required for a 5 μsecs sensitive period while 1.3 amps would probably be sufficient for a 2 usecs period. It will be noticed from the rather large slope of the curves that the probability of unstable breakdowns is reduced very sharply as the current is increased, so in practice it should be easy to operate with currents sufficiently large so that the failure rate due to this cause is negligible. The

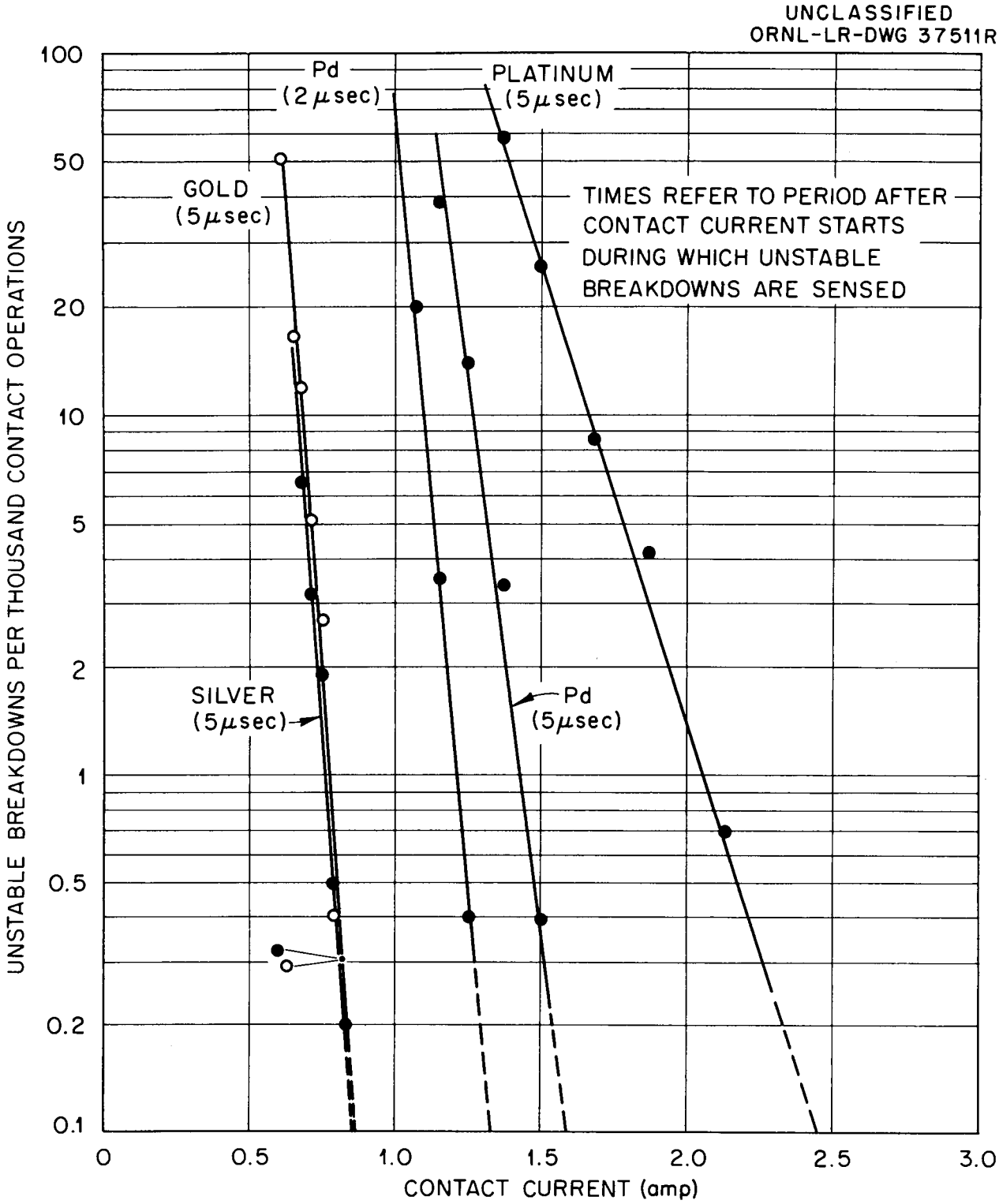

Fig. 6. Unstable Breakdown Performance of Common Contact Metals.

contact current should not be made a great deal larger than necessary, however, as contact erosion is usually enhanced at large currents.

Table I lists the contact metals which were tested, together with the critical circuit current, I_c, which would be expected to produce about one unstable breakdown in 10,000 contact operations. It will be noted that the critical current increases in the same general way as the melting temperature of the metals. This trend may be useful for predicting an approximate value for the I_c of an unlisted metal.

Table I. Critical Currents for Various Contact Metals

Metal	I_c (amp)	Melting Temperature (°C)
Silver	0.9	960
Gold	0.9	1063
Copper	1.7	1083
Palladium	1.7	1554
Platinum	2.5	1773
Tungsten	4.0	3410

EFFECT OF IMPERFECT CORE MATERIAL

After the significance of minimum contact current was realized and suitable values of supply voltage and primary series resistance were installed in the circuit in Fig. 1, single output pulses were still not always produced for each actuation of the contacts. Very narrow spikes of output voltage were noticed, even after the desired output pulse has long since passed. This is illustrated in Fig. 7. The primary current, i_1 of Fig. 7(a), would produce a core output voltage resembling Fig. 7(b). It will be noticed that the narrow spikes which follow the desired pulse are the derivative of the primary current waveform. When saturated, the core output voltage follows the usual magnetic winding equation:

$$e_2 = -N_2 \frac{d\phi}{dt} \qquad (2)$$

With perfect magnetic core material the flux transition which produces the normal output pulse completely saturates the core material so that further flux change is not possible. In reality, however, there is a certain small amount of flux change in any magnetic material when the applied magnetomotive force is removed. The hysteresis loops of Fig. 8 clearly display the change along any one loop when the applied field is removed, permitting the core flux to move from B_s back down to B_r. The ratio $\frac{B_r}{B_s}$ is known as the squareness ratio, R_s,[8] of the core. The nearer this ratio is to unity, the less will be the net flux change when the magnetizing force is removed. The portion of the curve from B_r to B_s is completely reversible so that application of a magnetizing force produces a flux change of opposite polarity but the same magnitude as that produced by removing this force.

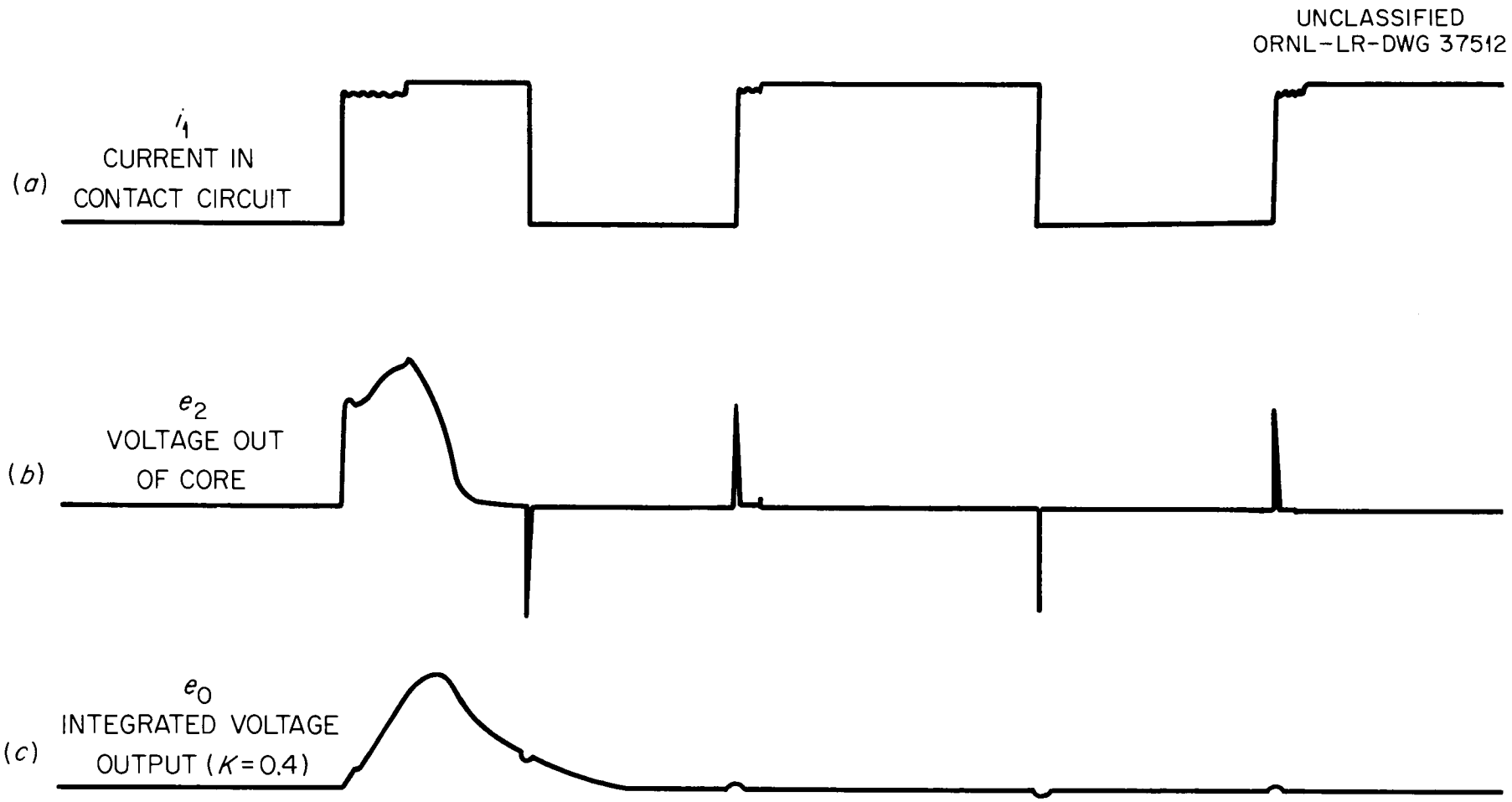

Fig. 7. Comparison of Waveforms in Switch-Core Circuits.

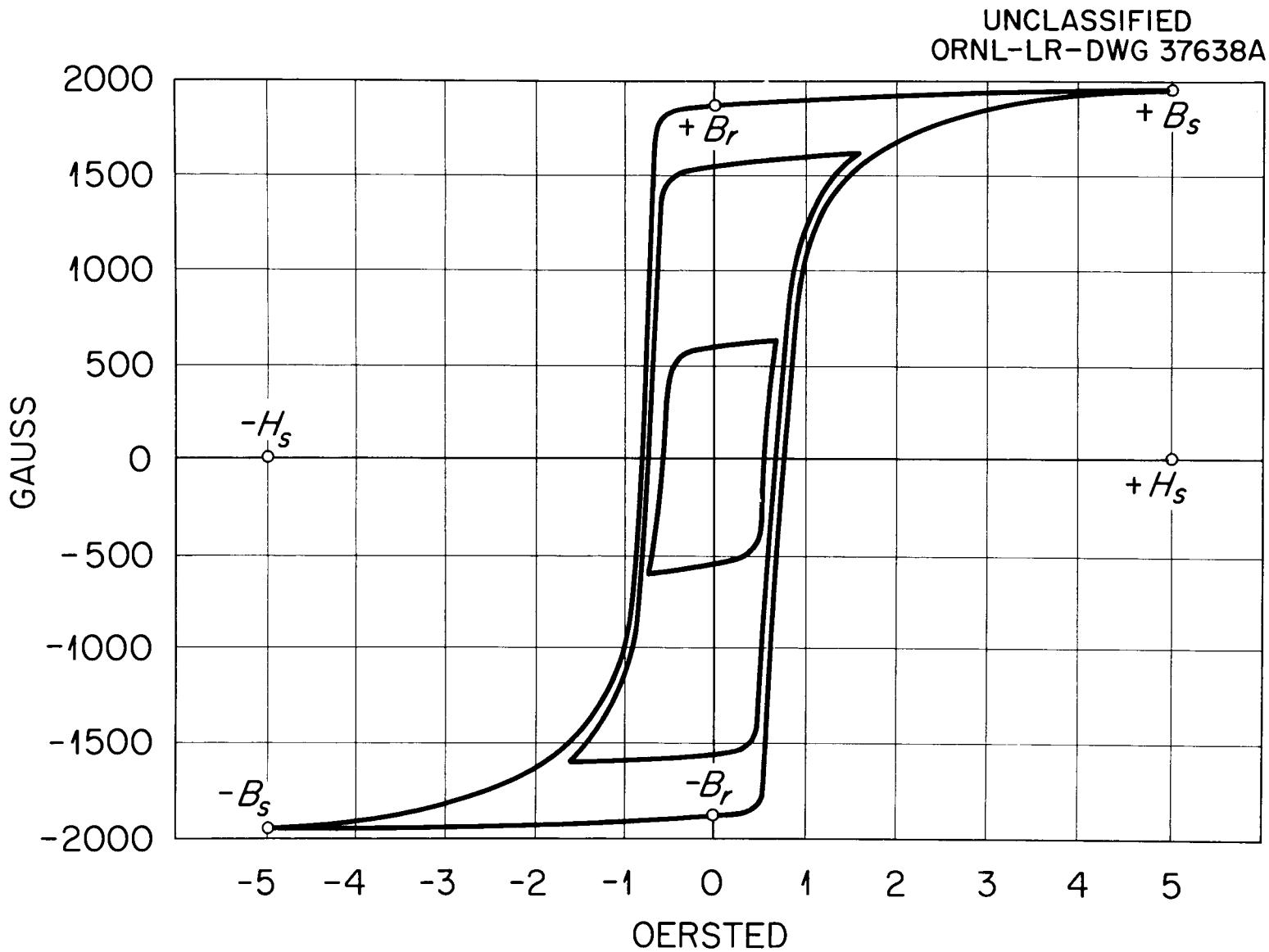

Fig. 8. Hysteresis Loops for S-3 Ferrite.

The squareness ratio, R_s, increases with flux density as may be seen from the decreasing slopes of the tops of the hysteresis loops in Fig. 8 as the magnetizing force producing the loop is increased. Unfortunately the peak amplitude of the output voltage spike produced by applying a magnetizing force to an already saturated core is determined, not by the amount of flux change, but by the rate of change of flux. The portion of the loop between B_r and B_s is extremely fast so the transition is time limited essentially by the rate of rise of the magnetizing force. When the core is saturated, the primary circuit is essentially resistive so that the rate of current buildup is determined almost entirely by the contacts. For most contact materials this is in the order of 10^{-8} sec or faster.[9] Thus if no preventive measures are taken, spikes may occur in the core output circuit which have a peak amplitude comparable with that of the signal pulse.

OUTPUT SIGNAL INTEGRATOR

The area under the output pulse curves is proportional to the amount of flux change which produced the pulse, so partial integration in the output circuit of the core offers the possibility of attenuating the amplitude of the noise spikes without seriously attenuating the signal pulse. It is obvious that the maximum signal-to-noise ratio (S/N_{max}) will occur with a very long time-constant integrator and will be equal to the ratio of the flux change which produces the desired signal ($B_r + B_s$) to the flux change which occurs when the driving magnetic force is removed ($B_s - B_r$). Thus

$$S/N_{max} = \frac{B_s + B_r}{B_s - B_r} = \frac{1 + R_s}{1 - R_s} \tag{3}$$

It is clear that a value of squareness ratio near unity is desirable for the core material to maximize this signal-to-noise ratio.

Perhaps the simplest integrator for this application is the single stage RC network. In an effort to compute the time-constant which would produce the best filtering action, the output pulses from the core were assumed to be of half-sinusoidal shape. Fig. 9 shows this approximation against a typical core output pulse. The width of the half-sine wave, τ_w, was chosen to equal about twice the full rise time of the signal pulse. It is apparent that the error in this approximation is quite small until the output has decayed to about 70% of its peak value. This is sufficiently accurate to obtain a reasonable solution.

CALCULATION OF INTEGRATOR ATTENUATION

To find the attenuation of a half-sine-wave pulse passing through a single RC integrator, the relation between input and output voltage of the circuit in Fig. 10 was developed. The details of the solution of the circuit equations are given in the appendix.

Let $\omega \equiv \frac{\pi}{\tau_w}$ and assume that the input voltage, e_2 between $0 \leq t \leq \tau_w$ is:

$$e_2 = E_2 \sin \omega t \tag{4}$$

The Laplace transform of the equation for the output voltage, e_o, is:

$$\mathcal{L}(e_o) = \frac{\mathcal{L}[e_2]}{(R_2C_2S + 1)} = \frac{E_2\omega}{(R_2C_2S + 1)(S^2 + \omega^2)} \tag{5}$$

Applying inverse transformation and simplifying:

UNCLASSIFIED
ORNL-LR-DWG 37508

0557

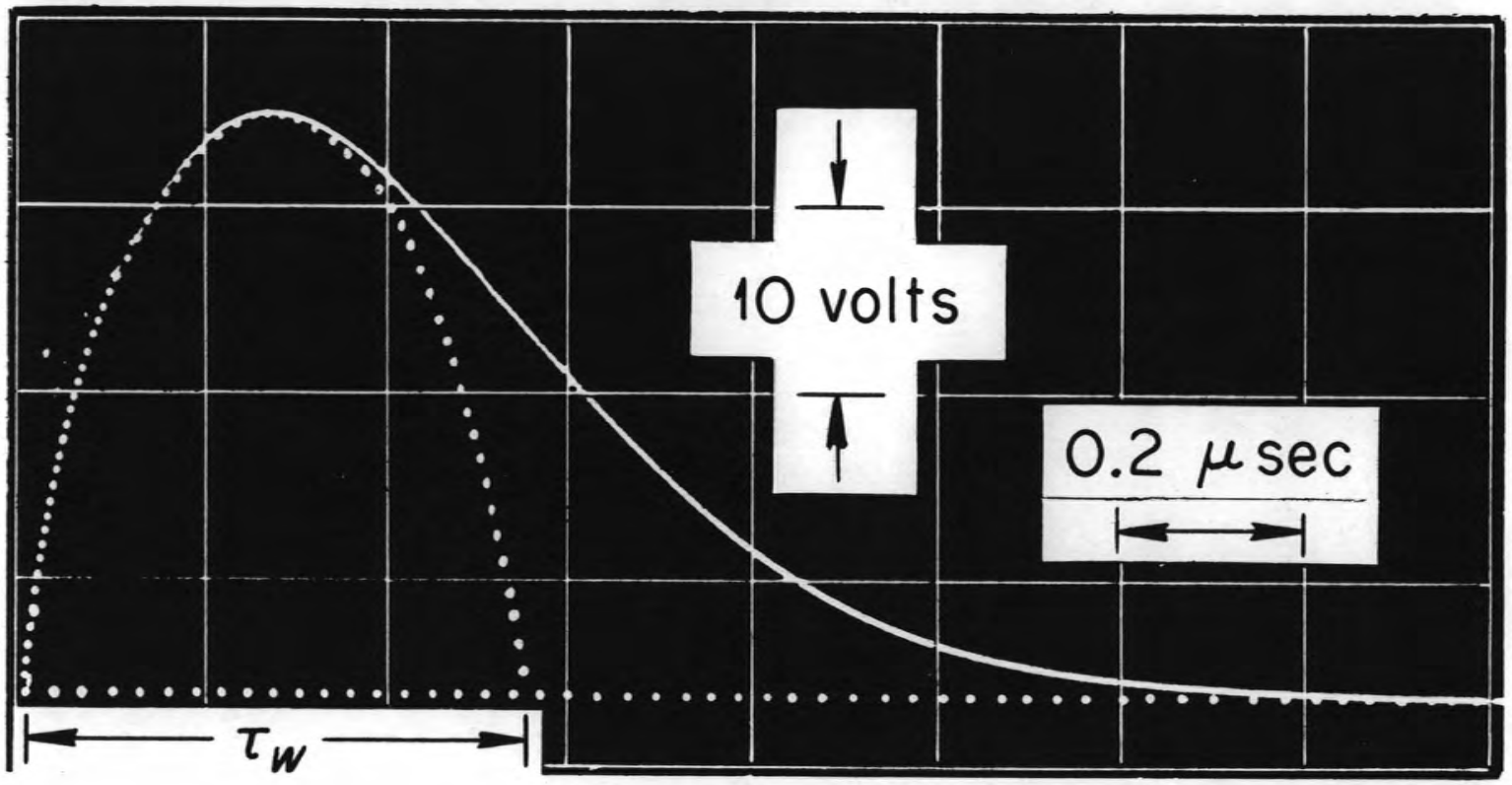

Fig. 9. Typical Core Output Waveform with Half Sine Wave Shown for Comparison.

UNCLASSIFIED
ORNL-LR-DWG 38849

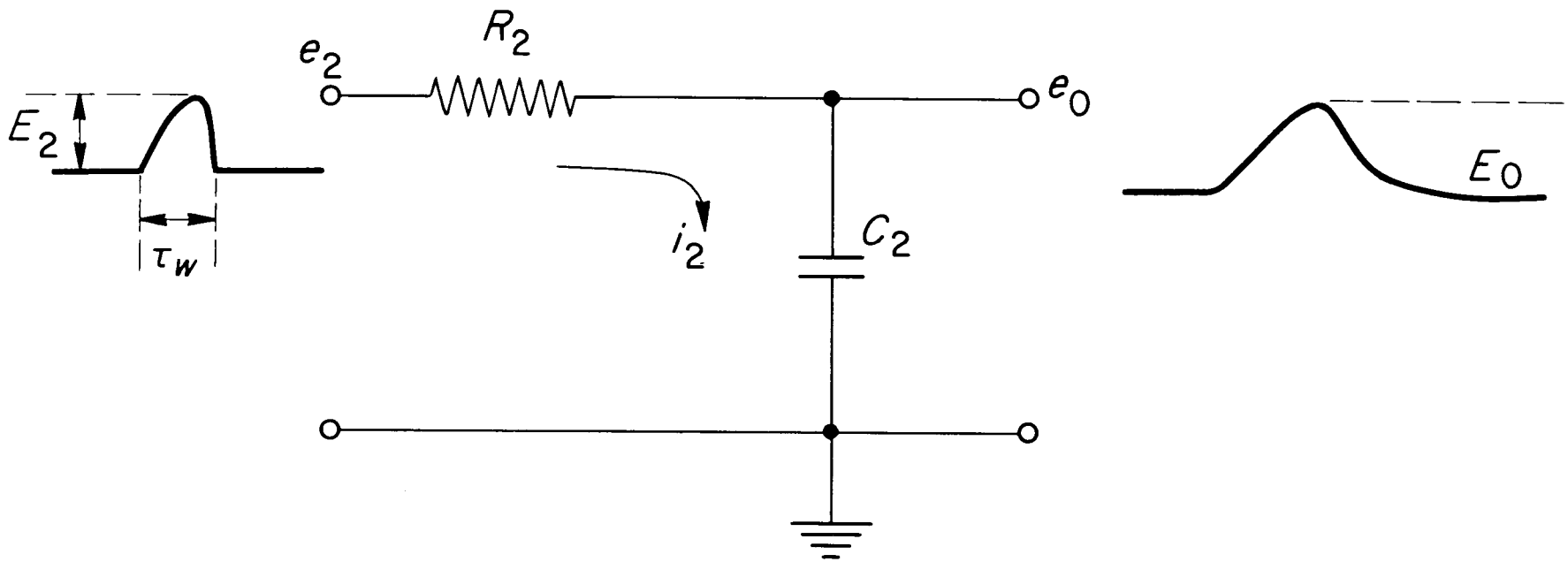

Fig. 10. Single Stage RC Integrator Circuit.

$$e_o = \frac{E_2 \omega R_2 C_2}{[(R_2C_2\omega)^2 + 1]} \left(\frac{\sin \omega t}{R_2C_2\omega} - \cos \omega t + e^{-t/R_2C_2} \right) \qquad (6)$$

Let $K \equiv \frac{R_2C_2}{\tau_w}$, then substituting for ω and R_2C_2:

$$e_o = \frac{E_2 \pi K}{(\pi K)^2 + 1} \left[\frac{1}{\pi K} \sin \pi(\frac{t}{\tau_w}) - \cos \pi(\frac{t}{\tau_w}) + e^{-1/K(\frac{t}{\tau_w})} \right] \qquad (7)$$

It is reasonable that the peak value of e_o, E_o, will occur after the start of the input pulse at $t = 0$, and before the input pulse ends at $t = \tau_w$. Equation 7 is valid during this period so the time, t_p, at which E_o occurs may be found by setting the time derivative of Equation 7 equal to zero. Differentiating Equation 7, setting it equal to zero and simplifying yields:

$$0 = \cos \pi(\frac{t}{\tau_w}) + \pi K \sin \pi(\frac{t}{\tau_w}) - e^{-1/K(\frac{t}{\tau_w})} \qquad (8)$$

Values of t_p, which are the solutions of this equation for t in terms of τ_w for various values of K, were determined graphically and are plotted in Fig. 11. The time at which e_o reaches its peak value varies from 0.5 τ_w (which is the time the input is at its peak) when K is zero, to 1.0 τ_w (which is the time at which the input wave terminates) when K is infinitely large.

When the values of t_p from Fig. 11 are inserted into Equation 7, solutions for e_o peak may be obtained. The ratio of peak input to peak output voltage is thus:

$$\frac{E_o}{E_2} = \frac{\pi K}{(\pi K)^2 + 1} \left[\frac{1}{\pi K} \sin \pi(\frac{t_p}{\tau_w}) - \cos \pi(\frac{t_p}{\tau_w}) + e^{-1/K(\frac{t_p}{\tau_w})} \right] \qquad (9)$$

A plot of this ratio for various values of K is shown in Fig. 12. It will be noticed that the attenuation of the circuit is small when K is small, but increases until it reaches 20 db per decade at large values of K.

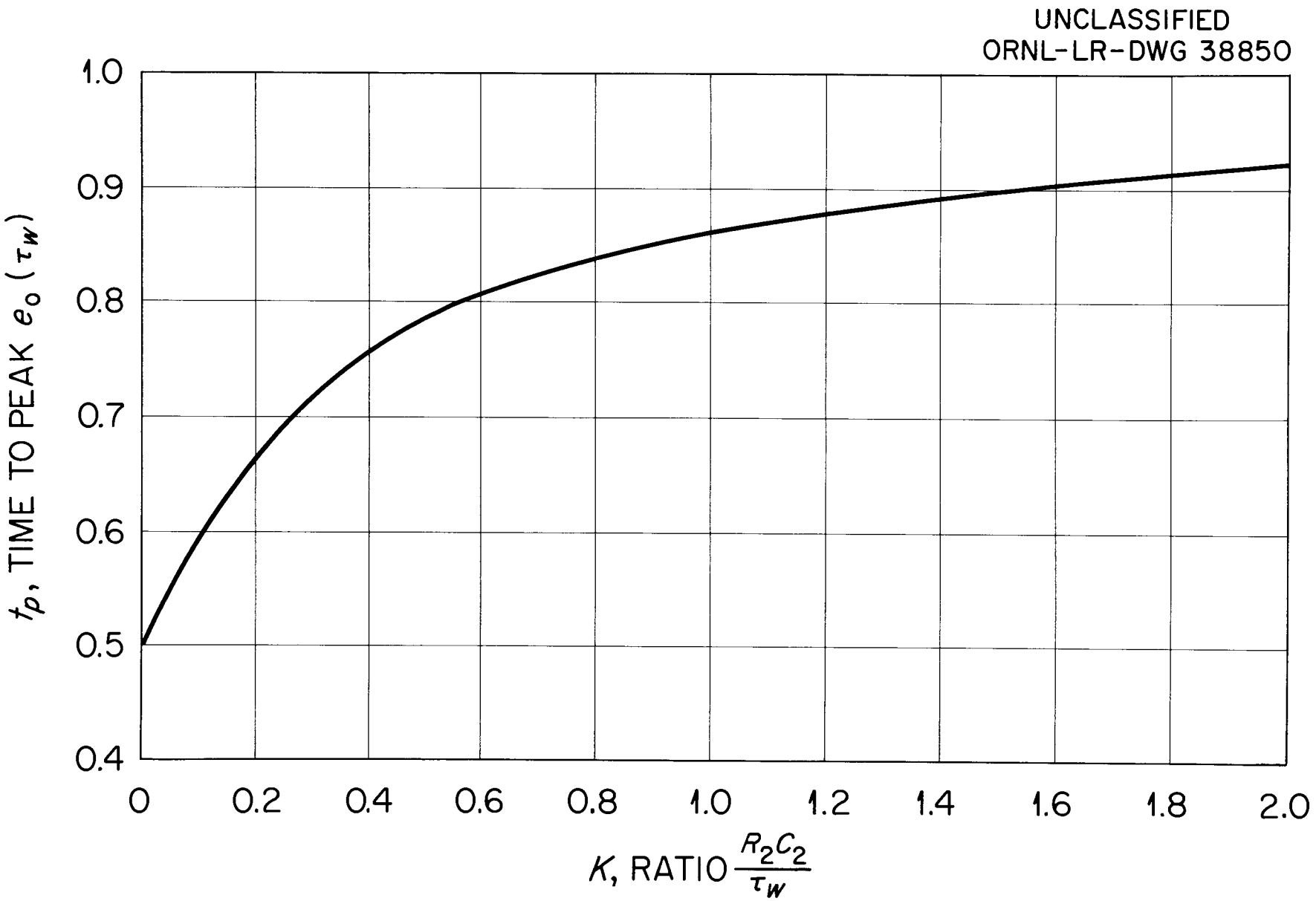

Fig. 11. Time at Which Peak Value of e_o Occurs.

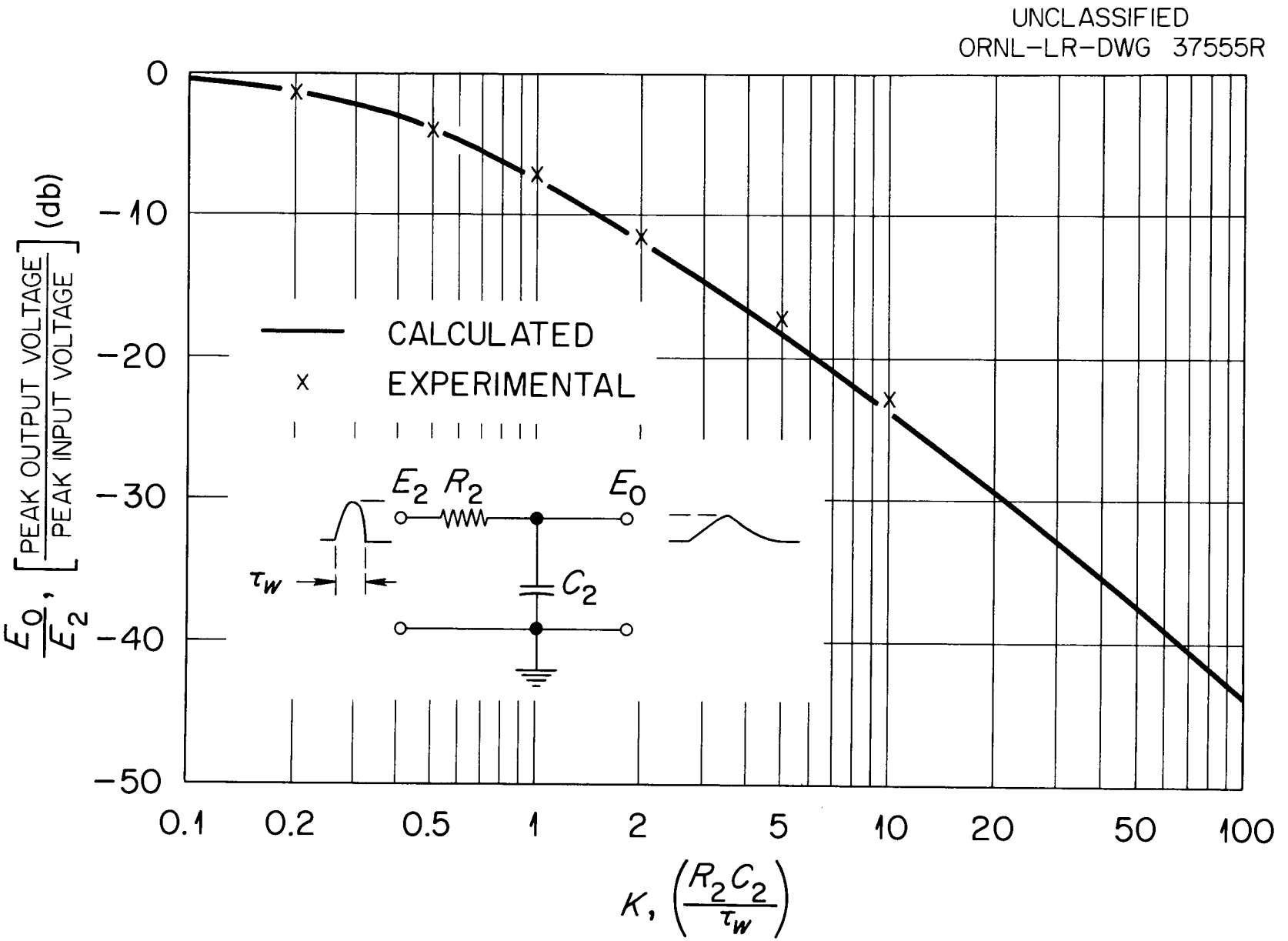

Fig. 12. Voltage Attenuation Curve of Integrator Circuit.

SELECTION OF INTEGRATOR TIME-CONSTANT

Usually the width of the noise spikes generated by the rapid flux transitions in a saturated core is much smaller than the width of the desired output signal caused by reversing the saturated flux state of the core. After integration, the ratio of peak amplitude of the desired signal to peak noise amplitude will depend upon the ratio of widths and amplitudes before integration. Unfortunately there is no value of K for the integrator which will yield a maximum signal-to-noise ratio. This is true because the ultimate signal-to-noise ratio obtainable by integration is the ratio of areas of the desired pulse to the noise pulse. The larger the value of K, the more nearly the output amplitude is related to the integral of the incoming pulses, thus the better the signal-to-noise ratio. It may be seen from Fig. 12, however, that the amplitude of the desired signal will drop rapidly if K is very large. A suitable compromise is $K = 0.4$. The attenuation of the desired signal with this value of K is then about 3 db, while measurements indicated an attenuation of the peak noise voltage was sufficient to produce signal-to-noise ratios of 30 db to 35 db for the ferrite cores* which were tested. Because of the extremely fast rise of the noise spikes, no accurate measurement of their amplitude and width before integration could be made. Fig. 7(c) shows the form of the output voltage after integration.

---

*General Ceramics S-1, S-3, and MF 3876 Ferrites.

OTHER CIRCUIT CONSIDERATIONS

The performance of the switch-core circuit of Fig. 1 was quite satisfactory after R_1 was chosen by the method indicated on page 17 and an RC integrator was added to the output circuit as explained on page 29. It was found, however, that certain other factors influence the operation of this device, particularly when it is used in conjunction with other circuitry. These factors together with some of the general design problems of this circuit will be considered briefly in this section.

POWER SUPPLY DECOUPLING

The supply voltage in the primary circuit, shown as V of Fig. 1, is called upon to furnish a transient current which may be several amperes peak when the switch is allowed to return to its normal state after actuation. The rate of rise of this current is extremely rapid as explained on page 22. The resulting sharp voltage transient developed on this supply line occasionally coupled into other circuits which shared this line, resulting in undesirable side effects.

Usually the switch core circuit was actuated by manual operation or by some other low duty-cycle means. A suitable RC decoupling network was chosen so that the condenser supplied the necessary peak current for a sufficient period to completely reverse the flux in the magnetic core while the resistor effectively isolated this surge from the supply line. The charge lost from the decoupling condenser during this surge was replaced by the decoupling resistor during the long interval between switch actuations.

COMPLETE CIRCUIT

Fig. 13 is a diagram of the complete circuit. The selection of parameters to fulfill the previously mentioned conditions for reliable single pulse production is rather straightforward.

The output impedance of the magnetic core secondary winding is a nonlinear function of N_1, N_2, i_1, and time, but in most cases it has a peak value less than a few hundred ohms. Most loads which are to be driven by this circuit have input impedances somewhat higher than this and so may be neglected in designing the magnetic circuit. In these cases, the manufacturers curves relating driving ampere turns, switching time, and peak voltage per turn may be used directly to select the core size and windings required to produce the desired output pulse.[10] A general approach for the core design in the case of heavy loading is available, if required.[11]

With a high load impedance, the output integrating time-constant is simply R_2C_2. Although this product should equal 0.8 times the full rise-time of the core output pulse for adequate integration, the actual values of R_2 and C_2 may be selected rather arbitrarily. It is wise to set a minimum value for C_2, however, so that the fast rise-time signals in the primary circuit will not be coupled into the secondary circuit by interwinding capacity. Capacitive division will usually be sufficient to suppress this undesired coupling if C_2 is greater than about 50 μμf, providing care is exercised while winding the core to insure maximum physical separation between the primary and secondary windings. Reasonable separation between components and lead wires in the input and output circuits is also advisable.

UNCLASSIFIED
ORNL-LR-DWG 37510R

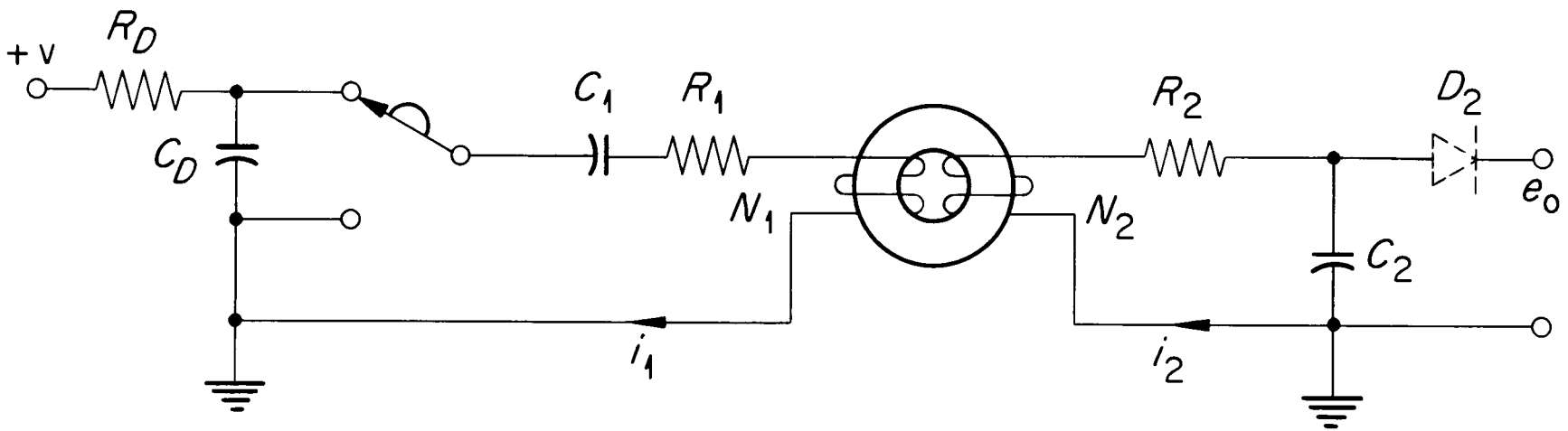

Fig. 13. Complete Switch-Core Circuit.

When low load impedances are expected, adjustment of the value R_2 and C_2 will be necessary to maintain the required output circuit time-constant.

The contact material dictates the minimum current which may be allowed during the flux reversal time of the core, as explained on page 15. Condensers C_D and C_1 must supply this current during the entire period. The voltage available to drive current across the contacts will diminish with time as the charge on these condensers changes. There is also a back voltage developed across the primary winding of the core which tends to diminish the driving voltage during the core switching time. Another effect which must be considered is the 15 volts lost across the contact arc during the core switching time. Thus the sum of these effects reduces the voltage drop across R_1 during the critical period while the core is switching. The value of R_1 should then be chosen so that even at this diminished voltage, the contact current remains in excess of the required I_c for the contact material used.

OUTPUT POLARITY

The output signal, e_o, is bipolar. One polarity of output pulse is obtained when the switch is closed, while the opposite polarity pulse results when the switch is allowed to return to its normal position. The design freedom afforded by the isolated secondary winding allows either polarity pulse to be chosen for actuating the following circuitry. This circuitry will then usually ignore the unused pulse. If necessary a diode, shown as D_2 of Fig. 13, may be inserted in series with the output circuit to insure that the undesired pulse be ignored.

TEST RESULTS

To test the reliability of a circuit incorporating the design requirements set forth in this thesis, the assembly shown in Fig. 14 was constructed. The design was based on a General Ceramics 3/8 inch diameter S-3 ferrite core and a push button switch with silver contacts. The desired output pulse into a high impedance load was to have about 25 volts peak amplitude and 0.5 μsec width with an input voltage of 130 volts. The circuit diagram in Fig. 13 was used and the following parameters were selected for this test:

N_1 = 2 turns	R_2 = 820 ohms
N_2 = 5 turns	C_2 = 220 μμf
R_1 = 43 ohms	R_D = 10,000 ohms
C_1 = 0.1 μf	C_D = 0.1 μf.

Fig. 15 shows the output pulse shape, e_o, from this assembly. For this picture, 100 output pulses were superimposed to test the uniformity of output signals. The small amplitude uncertainty is caused by the difference in primary current from the case of no contact arc to the case of continuous contact arc during the core switching time. Silver arcs usually start with rather wide contact separation so for most operations the arc burns all during the first 0.5 μsec required to switch the core. This arc lowers by about 10% the primary current available to switch the core, which accounts for the large group of output signals at the lower level.

A motor operated cam was arranged to actuate the switch at the rate of three cycles per second. The output pulses were monitored with

a scaler. More than ten million cycles of operation were recorded without a single false pulse or lost pulse before the test was discontinued.

UNCLASSIFIED
PHOTO 46466A

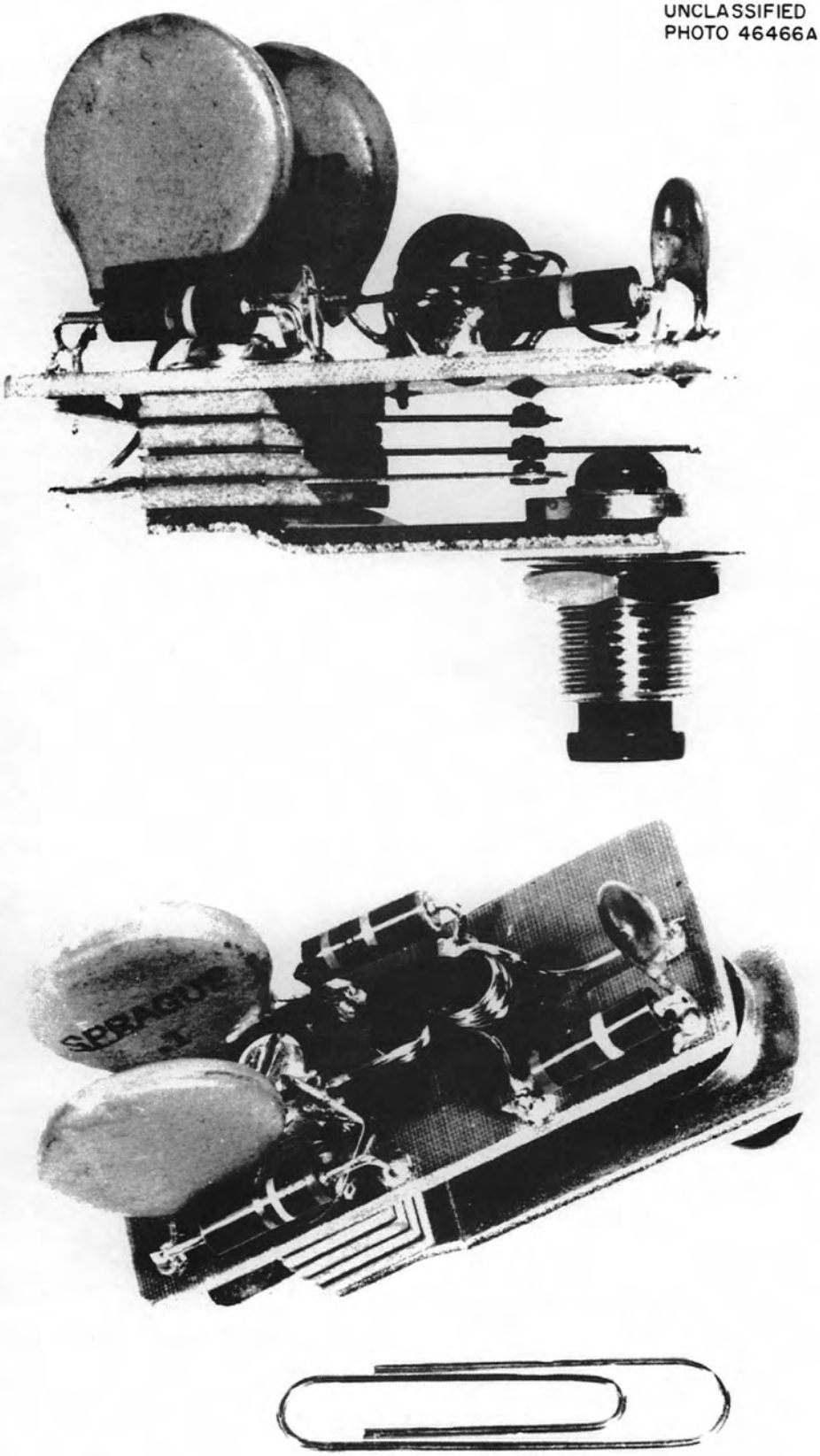

Fig. 14. Test Circuit Assembly.

UNCLASSIFIED
ORNL-LR-DWG 38851

0660

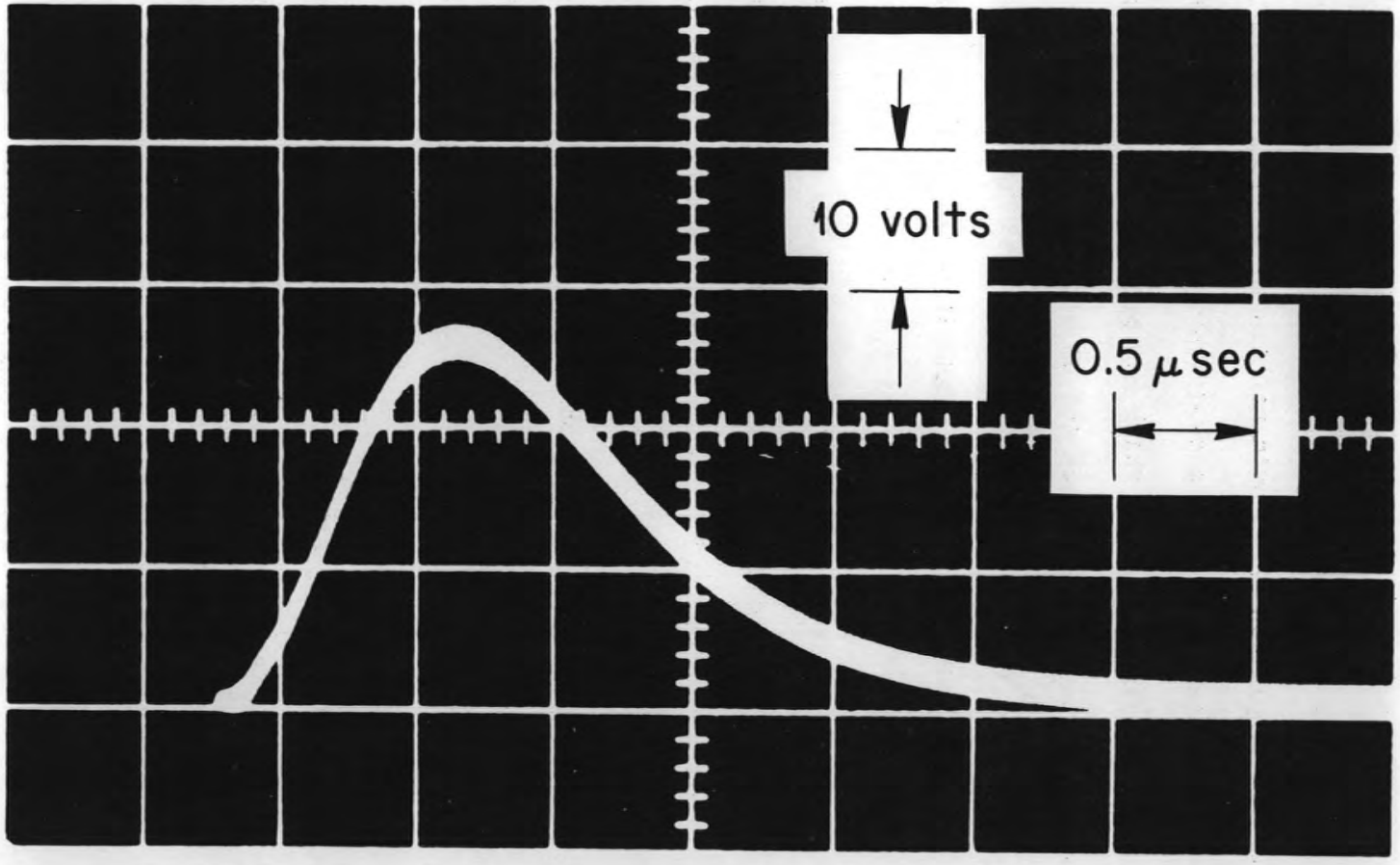

Fig. 15. Output Waveform from Test Circuit - One Hundred Superimposed Pulses.

CONCLUSIONS

During this investigation the following circuit conditions were found to contribute to reliable single pulse operation of the switch actuated magnetic core circuit:

1. The supply voltage should not exceed 300 volts as larger values cause unstable glow-discharges in the air between the closing contacts, which may produce false output pulses.
2. The contact current must not be allowed to fall below some critical value during the time required to reverse the state of flux saturation in the magnetic core. Smaller currents will result in occasional multiple output pulses. The value of this minimum current is related to the contact material.
3. The voltage waveform from the secondary winding on the magnetic core should be integrated to eliminate narrow spikes which occur as a result of contact bounce. These spikes cause rapid flux transitions even after the core is saturated. A single RC integrator with a time-constant of about 0.8 times the full rise-time of the main output pulse from the core was found to be satisfactory.
4. The placement of components in the primary and secondary circuits to maintain good isolation was found to be important in some cases. Winding separation on the magnetic core should be as great as possible to reduce air coupling and interwinding capacity.

The results of this investigation indicate that under certain conditions, a relatively simple magnetic core circuit may be used to reliably produce single pulses from the irregular current waveform generated by closing contacts. This circuit contains no active elements and does not draw stand-by power. With this circuit the reliability of single pulse production is to some degree under the control of the designer. In applications such as manually operated switches or slow speed machinery where the total number of switch operations expected is less than about one-hundred million, a considerable improvement in reliability may result with this circuit compared with one which depends upon active elements which deteriorate with time. For applications requiring more total operations, special contact materials may be required to withstand the eroding effects of the rather high peak currents required by the magnetic core circuit. The design freedom resulting from the d-c isolation of the output circuit and the possibility of having several output circuits with different pulse amplitudes and d-c levels is another desirable feature of this approach.

LIST OF SYMBOLS

B_r	Residual magnetic flux density
B_s	Saturation magnetic flux density
C_1	Condenser in series with primary
C_2	Condenser in secondary integration circuit
C_D	Decoupling condenser
D_2	Diode in output circuit
E	Voltage between contacts
e_o	Instantaneous value of output voltage
E_o	Peak value of output voltage
e_2	Instantaneous value of secondary voltage
E_2	Peak value of secondary voltage
F	Gross electric field strength
H_s	Magnetomotive force which produces B_s
i_1	Instantaneous value of primary current
i_2	Instantaneous value of secondary current
I_c	Critical contact current
K	Ratio of time constant to pulse width, R_2C_2/τ_w
$\mathcal{L}(X)$	Laplace transform of x
N_1	Number of primary turns
N_2	Number of secondary turns
R_1	Resistor in primary circuit
R_2	Resistor in secondary circuit
R_D	Decoupling resistor
R_s	Squareness ratio of magnetic core, B_r/B_s

s	Laplace transform operator
S/N	Ratio of peak value of main output pulse to noise output pulse
t	Time
t_p	Time at which peak value of e_o occurs
τ_s	Switching time of core (time for core flux to reach B_s with H_s applied)
τ_w	Width of half-sine wave pulse used to simulate core pulse
V	Primary supply voltage
β	Electric field enhancement factor
ϕ	Flux in magnetic core
ω	Ratio of π to τ_w, π/τ_w.

REFERENCES

1. MANUAL INPUT CIRCUIT FOR DIGITAL EQUIPMENT, N. E. PETERSON, Electronic Design, New York, N. Y., Vol. 7, No. 6, March 18, 1959, p. 154.

2. ELECTRICAL IMPULSE GENERATOR, N. L. KREUDER, United States Patent 2,802,759.

3. THE FORMATION OF METALLIC BRIDGES BETWEEN SEPARATED CONTACTS, G. L. PEARSON, The Physical Review, New York, N. Y., Vol. 56. Sept. 1, 1939, pp. 471-474.

4. ARCING OF ELECTRICAL CONTACTS IN TELEPHONE SWITCHING SYSTEMS, PART IV: MECHANISM OF THE INITIATION OF THE SHORT ARC, M. M. ATALLA, The Bell System Technical Journal, New York, N. Y., Vol. XXXIV, Jan. 1955, pp. 203-220.

5. ORGANIC VAPOR AND RELAY CONTACTS, L. H. GERMER and J. L. SMITH, Bell Laboratories Record, New York, N. Y., Vol. XXXVI, No. 4, April 1958, pp. 122-126.

6. ELECTRICAL BREAKDOWN IN HIGH VACUUM, W. S. BOYLE, P. KISLUIK and L. H. GERMER, Journal of Applied Physics, New York, N. Y., Vol. 27, No. 6, June 1955, pp. 720-725.

7. ARCING AT ELECTRICAL CONTACTS ON CLOSURE, PART II: INITIATION OF THE ARC, L. H. GERMER, Journal of Applied Physics, New York, N. Y., Vol. 22, No. 9, Sept. 1951, p. 1133.

8. MAGNETIC MATERIALS FOR DIGITAL COMPUTER COMPONENTS. I. A THEORY OF FLUX REVERSAL IN POLYCRYSTALLINE FERROMAGNETICS, N. MANYUK and J. B. GOODENOUGH, Journal of Applied Physics, New York, N. Y., Vol. 26, No. 1, Jan. 1955, pp. 8-18.

9. ARCING AT ELECTRICAL CONTACTS ON CLOSURE. III. DEVELOPMENT OF AN ARC, L. H. GERMER and J. L. SMITH, Journal of Applied Physics, New York, N. Y., Vol. 23, No. 5, May 1952, pp. 553-562.

10. FERRAMIC MAGNETIC CORES, TECHNICAL BULLETIN MT104, General Ceramics Corporation, Keasbey, New Jersey.

11. HIGH SPEED MAGNETIC SWITCHES FOR MEMORY MATRICES, D. R. ERB, Proceedings of the 1957 Electronic Components Symposium, Institute of Radio Engineers, New York, N. Y., 1957.

APPENDIX

DERIVATION OF INTEGRATOR CIRCUIT EQUATIONS

The equations for the integrator circuit of Fig. 10 may be written as follows:

$$e_2 - R_2 i_1 - \frac{1}{C_2} \int i_2 dt = 0 \tag{10}$$

$$e_o = \frac{1}{C_2} \int i_2 dt \tag{11}$$

With the system initially at rest, the Laplace transform of these equations is:

$$\mathcal{L}[e_2] = R_2 \mathcal{L}[i_2] + \frac{\mathcal{L}[i_2]}{C_2 s} \tag{12}$$

$$\mathcal{L}[e_o] = \frac{\mathcal{L}[i_2]}{c_2 s} \tag{13}$$

Solving equation 12 for $\mathcal{L}[i_2]$ gives:

$$\mathcal{L}[i_2] = \frac{\mathcal{L}[e_2]}{R_2 + \frac{1}{C_2 s}} = \frac{C_2 s \, \mathcal{L}[e_2]}{R_2 C_2 s + 1} \tag{14}$$

Substituting this value of $\mathcal{L}[i_2]$ into equation 13 yields:

$$\mathcal{L}(e_o) = \frac{\mathcal{L}(e_2)}{R_2 C_2 s + 1} \tag{15}$$

It is assumed that during the period $0 \leq t \leq \tau_w$

$$e_2 = E_2 \sin \frac{\pi}{\tau_w} t \tag{16}$$

Let $\omega \equiv \frac{\pi}{\tau_w}$, then:

$$e_2 = E_2 \sin \omega t \tag{17}$$

The Laplace transform of e_2 is then:

$$\mathcal{L}[e_2] = \mathcal{L}[E_2 \sin \omega t] = \frac{E_2 \omega}{s^2 + \omega^2} \tag{18}$$

Substituting this expression for $\mathcal{L}[e_2]$ into equation (15) gives:

$$\mathcal{L}[e_o] = \frac{E_2 \omega}{[R_2 C_2 s + 1][s^2 + \omega^2]} \tag{19}$$

Application of the residue theorem to obtain the inverse transform yields:

$$e_o = \frac{E_2\omega}{R_2C_2}\left[\frac{e^{-j\omega t}}{(-2j\omega)(-j\omega + \frac{1}{R_2C_2})} + \frac{e^{j\omega t}}{(2j\omega)(j\omega + \frac{1}{R_2C_2})} + \frac{e^{-\frac{t}{R_2C_2}}}{(-\frac{1}{R_2C_2} + j\omega)(-\frac{1}{R_2C_2} - j\omega)}\right] \qquad (20)$$

Gathering terms and finding a common denominator gives:

$$e_o = \frac{E_2\omega}{R_2C_2}\left[\frac{-(j\omega + \frac{1}{R_2C_2})e^{-j\omega t} + (-j\omega + \frac{1}{R_2C_2})e^{j\omega t}}{(2j\omega)[\omega^2 + (\frac{1}{R_2C_2})^2]} + \frac{e^{-t/R_2C_2}}{[\omega^2 + (\frac{1}{R_2C_2})^2]}\right] \qquad (21)$$

Regrouping exponentials and making use of identities simplifies the expression to:

$$e_o = \frac{E_2\omega R_2C_2}{(\omega R_2C_2)^2 + 1}\left[\frac{\sin \omega t}{\omega R_2C_2} - \cos \omega t + e^{-\frac{t}{R_2C_2}}\right] \qquad (22)$$

ORNL-2794
Instruments
TID-4500 (14th ed.)

INTERNAL DISTRIBUTION

1. C. E. Center
2. Biology Library
3. Health Physics Library
4-5. Central Research Library
6. Reactor Experimental Engineering Library
7-26. Laboratory Records Department
27. Laboratory Records, ORNL R.C.
28. A. M. Weinberg
29. L. B. Emlet (K-25)
30. J. P. Murray (Y-12)
31. J. A. Swartout
32. E. H. Taylor
33. E. D. Shipley
34. C. S. Harrill
35. M. L. Nelson
36. W. H. Jordan
37. S. C. Lind
38. F. L. Culler
39. A. H. Snell
40. A. Hollaender
41. M. T. Kelley
42. K. Z. Morgan
43. T. A. Lincoln
44. A. S. Householder
45. C. E. Winters
46. H. E. Seagren
47. D. Phillips
48. J. L. Lovvorn
49. P. R. Bell
50. C. J. Borkowski
51. G. S. Hurst
52. R. S. Livingston
53. E. Fairstein
54. C. W. Sheppard
55-57. R. J. Klein
58. W. G. Stone
59. C. P. Keim
60. C. D. Susano
61. J. V. Francis
62. M. J. Skinner
63. R. W. Johnson
64. D. J. Fisher
65. E. G. Struxness
66. J. R. McNally
67. J. L. Gabbard
68. R. A. Charpie
69. T. V. Blosser
70. E. L. Olson
71. J. A. Auxier
72. R. K. Abele
73. J. R. Tallackson
74. H. E. Banta
75. E. W. Burdette
76. R. R. Dickison
77. C. A. Mossman
78. R. G. Affel
79. H. J. Stripling
80. E. P. Epler
81. F. W. Manning
82. J. L. Blankenship
83. L. D. Roberts
84. J. W. T. Dabbs
85. J. Walter
86. S. H. Hanauer
87. R. H. Dilworth
88. P. M. Reyling
89. ORNL - Y-12 Technical Library, Document Reference Section
90. D. S. Toomb

EXTERNAL DISTRIBUTION

91. Division of Research and Development, AEC, ORO
92-714. Given distribution as shown in TID-4500 (14th ed.) under Instruments category (100 copies - OTS)