CENTRAL RESEARCH LIBRARY
DOCUMENT COLLECTION

4

MARTIN MARIETTA ENERGY SYSTEMS LIBRARIES
3 4456 0361396 2

ORNL-2776
Chemistry-General

PROGRESS REPORT ON THE ANALYSIS OF DISSOLVER SOLUTIONS BY CONTROLLED-POTENTIAL COULOMETRIC TITRATION

W. D. Shults
B. B. Hobbs
E. L. Blevins
P. F. Thomason

OAK RIDGE NATIONAL LABORATORY
operated by
UNION CARBIDE CORPORATION
for the
U.S. ATOMIC ENERGY COMMISSION

CENTRAL RESEARCH LIBRARY
DOCUMENT COLLECTION
LIBRARY LOAN COPY
DO NOT TRANSFER TO ANOTHER PERSON
If you wish someone else to see this document, send in name with document and the library will arrange a loan.

Printed in USA. Price $1.00. Available from the

Office of Technical Services
Department of Commerce
Washington 25, D.C.

LEGAL NOTICE

This report was prepared as an account of Government sponsored work. Neither the United States, nor the Commission, nor any person acting on behalf of the Commission:

A. Makes any warranty or representation, expressed or implied, with respect to the accuracy, completeness, or usefulness of the information contained in this report, or that the use of any information, apparatus, method, or process disclosed in this report may not infringe privately owned rights; or

B. Assumes any liabilities with respect to the use of, or for damages resulting from the use of any information, apparatus, method, or process disclosed in this report.

As used in the above, "person acting on behalf of the Commission" includes any employee or contractor of the Commission, or employee of such contractor, to the extent that such employee or contractor of the Commission, or employee of such contractor prepares, disseminates, or provides access to, any information pursuant to his employment or contract with the Commission, or his employment with such contractor.

ORNL-2776
Chemistry-General

Contract No. W-7405-eng-26

Analytical Chemistry Division

PROGRESS REPORT ON THE ANALYSIS OF DISSOLVER SOLUTIONS BY CONTROLLED-POTENTIAL COULOMETRIC TITRATION

W. D. Shults
B. B. Hobbs
E. L. Blevins
P. F. Thomason

DATE ISSUED

SEP 14 1959

OAK RIDGE NATIONAL LABORATORY
Oak Ridge, Tennessee
operated by
UNION CARBIDE CORPORATION
for the
U. S. ATOMIC ENERGY COMMISSION

MARTIN MARIETTA ENERGY SYSTEMS LIBRARIES
3 4456 0361396 2

TABLE OF CONTENTS

I. Introduction 1

II. General Discussion of the Program 1

III. Results of the Program 4

A. Instrumentation 4

B. Determination of Uranium 5

1. General Discussion 5

2. Precision Obtainable 7

3. Triisooctylamine Extraction 7

a. Introduction 8

b. Reagents 9

c. Procedure 9

d. Results 9

1. Darex 9

2. Sulfex 11

3. Zirflex 12

e. Future Program 12

4. Separation of Uranium by Hexone Extraction 13

a. Introduction 13

b. Reagents 14

c. Procedure 14

d. Results 15

e. Future Program 15

C. Determination of Plutonium 16

1. The Titration of Plutonium 16

2. Separation of Plutonium by Anion Exchange 18

3. Future Program 19

IV. Summary 20

V. References 22

I. INTRODUCTION

The accurate determination of the uranium and plutonium contents of dissolver solutions, i.e, solutions resulting from dissolution of nuclear reactor fuel materials, is extremely important both to the supplier and to the processor because processing charges will probably be based upon these determinations. Analytical methods for these estimations must not only be highly precise, accurate, and reliable, but must also be free from interferences from the variety of ionic and fission product components and high radiation levels associated with the dissolver solutions themselves. Furthermore, because of the high radiation levels involved, the method must be amenable to remote operation and therefore should involve a minimum number of manipulations and require a minimum amount of time. The Dissolver Solution Analysis Program (Activity Number 2724) has been devoted to the development of methods which meet these criteria.

II. GENERAL DISCUSSION OF THE PROGRAM

A study of existing colorimetric and polarographic methods for the determination of uranium showed that they do not possess the desired precision or accuracy. Potentiometric titration methods while quite

precise are subject to many interferences and are difficult to apply remotely to the analysis of highly radioactive solutions. The isotope dilution analyses that we have seen by the thermal ionization technique are not of sufficiently high precision for this application.

The most suitable analytical method, in view of the above requirements, is coulometric titrimetry at controlled potential. It is capable of high precision and accuracy, is reasonably rapid, and is generally tolerant toward ionic interferences. It possesses a high tolerance to the fission product elements (4). It has been shown to be adaptable to remote operation and to be useful for analysis of highly radioactive samples (5). The general approach to this problem at ORNL has been the application of controlled-potential coulometric titrimetry to the analysis of dissolver solutions of various types.

The application of controlled-potential coulometric titrimetry to the determination of uranium in dissolver solutions was simplified because the titration itself has been studied and applied to other, somewhat similar uses (1,2,4,5,9). The present studies, therefore, were directed along four lines: first, elucidation of the ultimate precision obtainable by the method as performed under the expected operating conditions; second, development of a suitable separation scheme to precede the titration when necessary; third, application of the titration and/or

separation-titration to synthetic and non-radioactive dissolver solutions; and, fourth, application of the titration and/or separation-titration to dissolver solutions. The first two phases of this program are complete, phase three is essentially complete, and phase four remains to be done.

The measurement of U^{233} and U^{235} in spent fuel from breeder reactors will also require a precise determination of uranium as a first step in the analysis. The determination of the mass ratios of U^{233} to U^{235} will require an isolation of the uranium from other fuel constituents. Therefore, the extraction studies on dissolver solutions will be directly applicable to the U^{233} - U^{235} program. The study of techniques of isotope ratio measurement will be made by alpha energy analysis and by mass spectrometry. The alpha energy analysis study will proceed as soon as equipment now on order is received. Mass spectrometry measurements will probably require relatively little development, but the technique of handling extracted dissolver solutions by mass spectrometry will be studied as man power becomes available.

Some work on the controlled-potential coulometric titration of plutonium has been reported (9). That work, though concerned primarily with the analysis of relatively concentrated and pure plutonium solutions, indicates that the titration itself offers much promise for dissolver solution analysis. Consequently, plutonium studies at ORNL have been directed toward development of that titration and of a

suitable separation scheme to precede the titration when necessary. These phases are essentially complete. Elucidation of the ultimate precision obtainable by the method as performed under expected operating conditions and application to synthetic and genuine dissolver solutions remains to be done.

The following sections discuss in some detail the results of all these studies.

III. RESULTS OF THE PROGRAM

A. Instrumentation

The Model Q-2005 Electronic Controlled-Potential Coulometric Titrator shown in Fig. 1 was developed at ORNL to meet the needs of the dissolver analysis studies as well as other programs at ORNL. All uranium studies reported here were made with an instrument similar to the one described in the literature (6,7). This instrument is an electronic device capable of performing either manual or automatic redox titrations at a controlled potential. The electrolysis current of the titration is integrated by means of a stabilized amplifier. The integral is read out as a voltage on a potentiometer or a digital voltmeter. This instrument is a simplified version of Booman's[3] equipment since his second potential control amplifier has been eliminated by use of a difference amplifier for potential

control. Also the ORNL instrument is completely AC operated and has a transistorized current amplifier stage to simplify the attainment of high initial electrolysis current. Due to the high equivalent weight and relatively small quantities of plutonium expected in dissolver solution samples, certain circuit changes were necessary so as to provide a fifty-fold increase in sensitivity. These changes are still under observation and will be reported when the plutonium studies are completed.

B. Determination of Uranium

1. General Discussion

The controlled-potential coulometric titration of uranyl ion in a citrate electrolyte was reported by Booman et al. (1,2) to give results reliable to 0.1%. A titration which uses 1 N H_2SO_4 as the supporting electrolyte has been applied to the analysis of Homogeneous Reactor fuel (4,5) and to the determination of both copper and uranium (10) with similar results.

This titration involves electrolytic conversion of UO_2^{++} to U(IV) at a mercury cathode under conditions which maintain 100% current efficiency. Consequently, integration of the current consumed gives a measure of the amount of uranium electrolyzed. By making the electrolysis at a controlled electrode potential, the

determination is made relatively free of interferences as compared with other redox methods.

The potential at which the electrolysis is made is, of course, dependent upon the supporting electrolyte solution. For 1 N H_2SO_4, a potential of -0.3 v vs. Ag-AgCl- saturated KCl has proved to be quite satisfactory. Sulfuric acid is a particularly desirable supporting electrolyte because the reduction of uranyl ions proceeds through a UO_2^+ stage which disproportionates to UO_2^{++} and U(IV) and this disproportionation is enhanced in sulfuric acid.

The titration cell used in these studies is shown in Fig. 2. This cell is adequate for the titration of approximately 5-10 mg of uranium. Aliquots of some dissolver solutions (such as from aluminum clad and zirconium clad fuels) probably can be titrated directly. However, a pre-reduction at +0.125 volts vs. Ag-AgCl-saturated KCl will be necessary to eliminate the interference of ferric iron or other oxidants in the coulometric determination of uranium. Reduction of interfering oxidants by hydroxylamine prior to titration may be useful for samples which contain large quantities of iron, but offers no advantage for the small quantities in these fuels.

In the stainless steel type fuels the presence of gross quantities of iron, nickel, and chromium will necessitate a prior separation of uranium before titration. The presence of large amounts

of fission products may also necessitate such a prior separation. Therefore, a study has been made of two organic extractants, tri-isooctylamine-in-xylene and Hexone (methyl isobutyl ketone), for this purpose. Solvent extraction separation followed by selective controlled-potential coulometric titration gives a method which is specific for the determination of uranium.

2. Precision Obtainable

The precision to be expected of this method under various operating conditions has been established and is given in Table I.

Table I

Precision of Coulometric Titration of UO_2SO_4

Operating Conditions	Relative Standard Deviation, %
Benchtop Titration	0.1
Remote Titration, Shielded Facility	0.2
Remote Separation of Molybdenum(1) and Titration of Uranium, Shielded Facility	0.4

(1) Molybdenum was removed by solvent extraction with a solution of α benzoinoxime in chloroform as developed by Farrar et al. (4).

3. Triisooctylamine Extraction

a. Introduction

The liquid-liquid extraction of uranium from hydrochloric acid solution with triisooctylamine-in-xylene has been applied to its separation from fission products by Moore (8). This separation, followed by controlled-potential coulometric titration, has been evaluated for the determination of uranium in non-irradiated synthetic dissolver solutions. These solutions contained approximately the concentrations and constituents of the the three major types of dissolver feed solutions. These feeds have been:

1. Darex dissolver solutions: stainless steel-uranium dioxide, e.g., Army Power Package Reactor Fuel dissolved in aqua regia.

2. Sulfex dissolver solutions: thorium dioxide-uranium dioxide pellets, e.g., Consolidated Edison Reactor Fuel dissolved in nitric acid.

3. Zirflex dissolver solutions: nitric acid solutions of UO_2 cores from zirconium clad fuels.

Each of these particular dissolver solutions has analytical problems peculiar to it alone. So each will be discussed separately and the results of the evaluation of the procedure given. However, the same basic procedure is used for all types of dissolver solutions.

b. Reagents

Aluminum nitrate salting agent - 2.5 M $Al(NO_3)_3$ made 1.5 M in NH_4OH.

Organic extractant - 5% (vol) triisooctylamine in xylene.

Hydroxylamine hydrochloride - 5% (weight-volume) in water.

Stripping agent - 0.05 M $HClO_4$ - 1 N H_2SO_4.

c. Procedure

An aliquot of sample containing 5-10 mg of uranium is added to 5 ml of the $Al(NO_3)_3$ salting agent. The solution is stirred and 5 drops of $NH_2OH \cdot HCl$ is added. Five milliliters of the organic solvent is added and the solution extracted 5 minutes. After the phases separate, the aqueous phase is drained and discarded. The organic phase is equilibrated twice with 5 ml portions of the stripping reagent, each is drained directly into the coulometric cell. Six drops of conc. H_2SO_4 is added to the solution, mercury is added,and the sample is de-aerated for 5 minutes. The sample is then pre-titrated at +0.125 v vs. Ag-AgCl-saturated KCl. Uranium is then titrated at -0.30 v vs. Ag-AgCl-saturated KCl.

d. Results

1. Darex type dissolver solutions.

Iron, chromium, and silica are the most serious interferences in this particular type of dissolver solution. By the

addition of hydroxylamine to the aqueous phase, chromium is prevented from being extracted. Iron is partially extracted and is carried over into the coulometric cell. The few milligrams of iron that is extracted is pre-reduced at +0.125 volt which reduces iron to its lower valence state and thus prevents its interference in the uranium titration. Silica can be separated by high speed centrifugation.

Nevertheless, iron and silica still dictate the use of an aliquot size that can be successfully extracted. Too much of either of these interferences will prevent the separation of the organic phase in the initial extraction. Typical results with this type of solution are:

1. Solution containing 2.152 mg U/ml, 6.25 mg Fe/ml, 2.50 mg Cr/ml, 1.25 mg Ni/ml, 0.5 M HNO_3. Average of 15 titrations.

Mg U Present	Mg U Found	% Error
2.152	2.153	+0.05%

S.D. = 0.4%

L.E. = ± 0.8%

2. Solution containing 4.462 mg U/ml, 6.25 mg Fe/ml, 2.50 mg Cr/ml, 1.25 mg Ni/ml, 0.5 M HNO_3. Average of 9 titrations.

Mg U Present	Mg U Found	% Error
4.462	4.449	-0.3

S. D. = ± 0.2%

L. E. = ± 0.4%

3. Twelve other determinations were made in which the uranium content of the sample was varied. The accuracy and precision agrees with the results already presented.

2. Sulfex type dissolver solutions.

Since the dissolver solution in this particular type consists of a nitric acid solution of ThO_2 and UO_2, no ionic interferences are present. However, thorium is extracted by the organic solvent along with the uranium. In order to have enough uranium to titrate (2-5 mg), a large quantity of thorium (50-60 mg) is present and this loads the organic extractant beyond its capacity. Therefore, a 20% (vol) triisooctylamine-in-xylene solution was used as the extractant and this in turn necessitated the use of a stripping reagent of 1 N H_2SO_4 containing 0.2 M $HClO_4$.

Typical results with this type of solution are:

1. A solution containing 2.160 mg U/ml, 54.4 mg Th/ml, 0.01 M F^- ml , 2.5 M HNO_3. Average of 12 titrations.

Mg U Present	Mg U Found	% Error
2.160	2.163	+0.1%

S. D. = 0.3

L. E. = ± 0.6

2. Twenty-three other determinations were made using different concentrations of uranium and thorium. The accuracy and precision agree favorably with the data presented.

3. Zirflex type dissolver solutions.

Because this type of dissolver solution is relatively concentrated in uranium, a dilution is necessary to obtain a suitable amount of uranium for titration. No interferences were expected because of this large dilution; however, the procedure was evaluated with this type of solution and the results are given below.

Solution containing 5.132 mg U/ml, 0.002 mg Sn/ml, 0.020 mg Zr/ml, 0.019 mg F/ml, 0.6 M HNO_3. Average of 12 titrations.

Mg U Present	Mg U Found	% Error
5.132	5.132	0

S. D. = 0.27 %

L. E. = ± 0.54 %

e. Future Program

Studies are presently underway to establish the effect of fission products upon the extraction, on the titration, and on the

entire procedure. Plans are being made to use the facilities of the High Radiation Level Analytical Facility to gather data on remote handling and radiation effects as they affect this procedure.

4. Separation of Uranium by Hexone Extraction

a. Introduction

A method for the determination of uranium by extraction with methyl isobutyl ketone (Hexone) and coulometric titration has been reported by Booman and Holbrook (1). That method is free from a large number of interferences but is rather time consuming because destruction of organic materials is required before the coulometric titration is made. Studies have been made towards modifying that procedure to make it a useful supplement to the method discussed above.

The procedure now involves extraction of uranium into Hexone from "acid deficient" aluminum nitrate solution, recovery of uranium from an aliquot of the organic phase, destruction of organic residue, dissolution of uranium, and titration of uranium. The cell shown in Figure 3 was designed so that these steps can be made with a minimum number of operations. It is a Vycor crucible in which both the organic removal steps and the uranium titrations can

be made without transfer. Extractions are made in a 25 mm test tube with a glass rod stirrer mounted on a mechanical stirrer entering through the top.

b. Reagents

Aluminum nitrate salting agent - prepared as directed by Booman, et al. (2)

Extractant - stock methyl isobutyl ketone is washed with 1 M HCl and equilibrated with the salting agent before use.

c. Procedure

1. Transfer 5 ml $Al(NO_3)_3$ salting agent, 5.0 ml pre-equilibrated hexone, and a sample aliquot containing 5-10 mg of U to the test tube for extraction.

2. Stir mechanically for 5 min (10 min for a 10 mg U sample). Allow phases to separate and transfer a 4.0 ml aliquot from the organic phase to the titration cell.

3. Evaporate to dryness under an infra-red heat lamp and "flame" over a Meeker burner for 5 min to destroy traces of organic material.

4. Dissolve residue in 20 drops 1:2 HNO_3 and evaporate to dryness. Cool and add 10 more drops HNO_3. Evaporate to dryness again to be sure that all the oxide has been converted to

nitrate.

5. Take up in 4 drops conc. H_2SO_4 and evaporate to fumes.

6. Cool, add 5 ml 1 N H_2SO_4 and heat until hot but not boiling.

7. Cool, add mercury, and deaerate 5 minutes.

8. Pretitrate at +0.125 v vs. Ag-AgCl-saturated KCl and then titrate uranium at -0.3 v vs. Ag-AgCl-saturated KCl.

d. Results

That procedure has been evaluated by analyzing standard uranium solutions and the results are shown in Table II.

Table II

Precision of Hexone Extraction-Coulometric Titration of Uranium

mg U Taken	Extracted	No. of Titrations	Relative Standard Deviation, %
5.44	No	14	0.2
5.44	Yes	17	0.4
10.31	No	9	0.2
10.26	Yes	14	0.5

e. Future Program

Final improvements are being made in this procedure at the present time. When these changes are made, the procedure will be applied to nonradioactive synthetic dissolver solutions and to authentic

dissolver solutions. Since the application of anion exchange to plutonium separation has been highly successful, this technique will also be studied for possible application to the uranium determination problem.

C. Determination of Plutonium

1. The Titration of Plutonium

The controlled-potential coulometric titration of plutonium developed at ORNL is somewhat similar to one reported by Scott and Peekema (9). Plutonium is converted electrolytically to the three valence and then coulometrically oxidized from the three to the four valence -- oxidation providing the measuring electrolysis.

These electrolyses are carried out in a 50 ml Vycor crucible that is fitted with a Teflon cap which supports a helium sparging tube, a platinum gauze working electrode, and two porous glass tubes which serve as salt bridge connections to two other electrodes: the "counter" electrode (a platinum wire in 1 M HNO_3) and a reference electrode (Hg-Hg_2SO_4-saturated Li_2SO_4). Stirring is provided by a small glass propeller whose shaft protrudes through the Teflon cap and is connected to an 1800 rpm Bodine motor. The optimum solution volume for this cell design is 10 ml in which case approximately 25 minutes is required for the complete procedure.

Molar solutions of perchloric, nitric, and hydrochloric acids may be used as supporting electrolytes. Sulfuric acid can be

used, but is less desirable because the electrolysis potentials are markedly changed by sulfate complexing. Hydrofluoric acid cannot be tolerated.

In $HClO_4$, HNO_3, or HCl, reduction is made at +0.125 v vs. $Hg-Hg_2SO_4$-saturated Li_2SO_4 while the oxidation is made at +0.425 v vs. $Hg-Hg_2SO_4$-saturated Li_2SO_4. These potentials were chosen because they result in essentially complete conversion between valence states and still allow a maximum tolerance to ferric ions, a potential interference.

No studies have been made to determine the exact concentrations at which other ions begin to interfere. However, preliminary studies and work previously reported (9) indicate that very few ionic interferences are likely. The method is not sensitive to extremely large amounts of a number of ions including uranium, aluminum and zirconium; it is tolerant to smaller but reasonable amounts of several other ions which are likely to be encountered, such as iron. Mercury is a serious interference but it can be removed prior to titration by several methods, including the anion exchange method discussed below.

Titration of plutonium in this fashion is capable of good precision and accuracy as shown in the following table. The procedure used to obtain that data consists of four steps:

1. Approximately 10 ml of 1 M $HClO_4$ containing the plutonium was placed in the cell, positioned, and the helium flow and stirring motor started.

2. A reduction at +0.125 v vs. $Hg-Hg_2SO_4$-saturated Li_2SO_4 was made, terminating when the current fell to 5 μa.

3. An oxidation at +0.425 v vs. $Hg-Hg_2SO_4$-saturated Li_2SO_4 was made, again terminating at 5 μa. The current consumed was integrated during this electrolysis.

4. The weight of the plutonium titrated was calculated from the current consumed during oxidation.

Mg Pu Titrated	Rel. Std. Dev., %
1.00	0.1
0.250	0.3
0.050	1.5

2. Separation of Plutonium by Anion Exchange

Anion exchange was chosen as the method for separating plutonium from dissolver solution samples (when necessary) prior to its titration. There are several advantages to the ion exchange technique. First of all is the fact that it is a very efficient means of separating plutonium from most other ions. Secondly, concentration of plutonium on the resin column is possible. This may prove quite useful when the samples contain very small quantities of plutonium. Other advantages

are the ease with which remote separations can be made, radiation stability of the resin, and the small solution volumes associated with this method of separation.

The procedure consists of adsorbing Pu(IV) from 8 M HNO_3 on Dowex 1-X4 (50-100 mesh). The resin bed is contained in a 10 mm filter stick which has been sawed off just below the frit. A "B" porosity frit gives a suitable flow rate: 1 to 2 ml/min. The resin is washed with 25 ml 8 M HNO_3 and allowed to drain. Plutonium is then eluted directly into the titration vessel with hot (70-80°C) 0.5 M HCl. Plutonium is titrated as described above except that a small quantity of sulfamic acid must be added to destroy traces of nitrite ions which may be present.

Radiometric studies of this procedure have established that plutonium loss in the absorption and washing steps is less than 0.1% and that greater than 99.9% is eluted in the first 15 ml of effluent. Radiometric studies of synthetic dissolver solutions of the thorex type have indicated that similar column efficiencies are attained with sample solutions of the expected ionic composition.

3. Future Program

In order to complete the plutonium program now underway, the following three studies are planned:

a. Precision studies which will establish the capabilities of the complete procedure and the optimum amount of plutonium per sample to be analyzed.

b. Application of the titration and the separation-titration to radioactive dissolver waste solution to which known amounts of plutonium will be added. The procedure will be modified to circumvent interferences in these solutions if necessary.

c. Precision studies of the final procedure as applied to authentic dissolver samples.

IV. SUMMARY

A discussion is given of the progress that has been made at ORNL on the application of controlled-potential coulometry to the determinations of uranium and plutonium in various types of dissolver solutions.

Two methods have been developed for separating uranium from the sample aliquot prior to its titration: an extraction with triisooctylamine-in-xylene and an extraction with methyl isobutyl ketone. In the former case, uranium is stripped from the organic extractant for titration. In the latter case, uranium is recovered from an aliquot of the extractant by destroying the organic material and then titrated. Both procedures are capable of good precision, ca. 0.2%. These two

procedures should be adequate for handling all of the solutions presently under consideration.

A controlled-potential coulometric titration has been developed for plutonium analysis. An anion exchange separation procedure for plutonium has also been developed. Combinations of the separation and the titration should result in a precise and specific method for plutonium analysis.

Future plans are given for the studies of each of these methods.

V. References

1. Booman, G. L., Holbrook, W. B., Anal. Chem. 31, 10 (1959).
2. Booman, G. L., Holbrook, W. B. and Rein, J. E., Anal. Chem. 29, 219 (1957).
3. Booman, G. L., Anal. Chem. 29, 213, (1957).
4. Farrar, L. G., Thomason, P. F. and Kelley, M. T., Anal. Chem. 30, 1511 (1958).
5. Horton, A. D., Farrar, L. G., Hobbs, B. B. and Shults, W. D., "The Coulometric Titration of HRT Fuel," p. 95, TID-7568 (Pt. 2), Oct. 1, 1958.
6. Jones, H. C., "Automatic Coulometric Titrator, Electronic Controlled-Potential," Method Nos. 1 003029 and 9 003029, ORNL Master Analytical Manual, TID-7015, Sections 1 and 9.
7. Kelley, M. T., Jones, H. C. and Fisher, D. J., Anal. Chem. 31, 488 (1959).
8. Moore, F. L., Anal. Chem. 30, 908 (1958).
9. Scott, F. A. and Peekema, R. M., "Analysis for Plutonium by Controlled Potential Coulometry," A/CONF. 15/P/914, USA, June, 1958.
10. Shults, W. D. and Thomason, P. F., Anal. Chem. 31, 492 (1959).

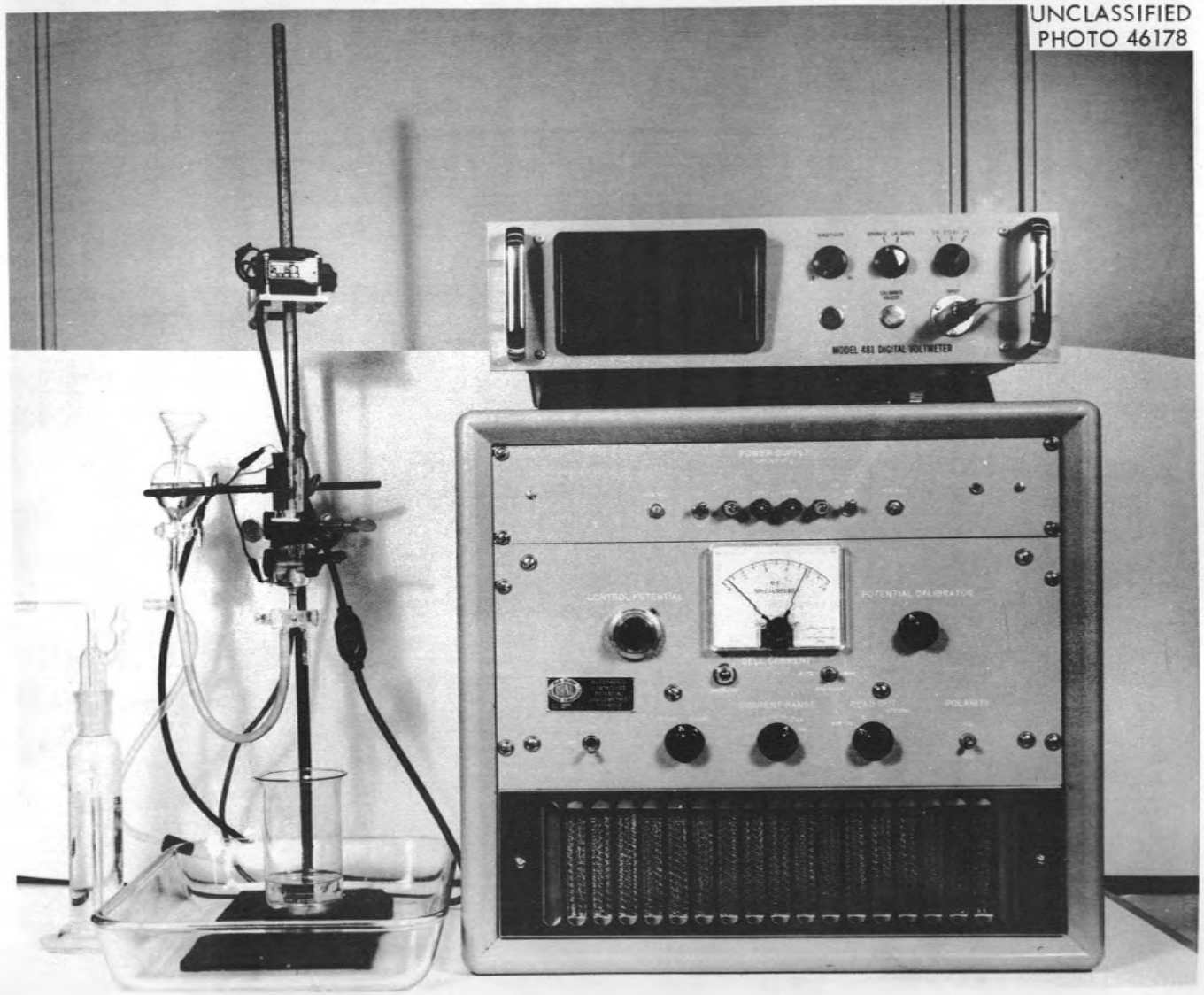

Fig. 1. Controlled Potential Coulometric Titrator.

UNCLASSIFIED
ORNL-LR-DWG. 32682

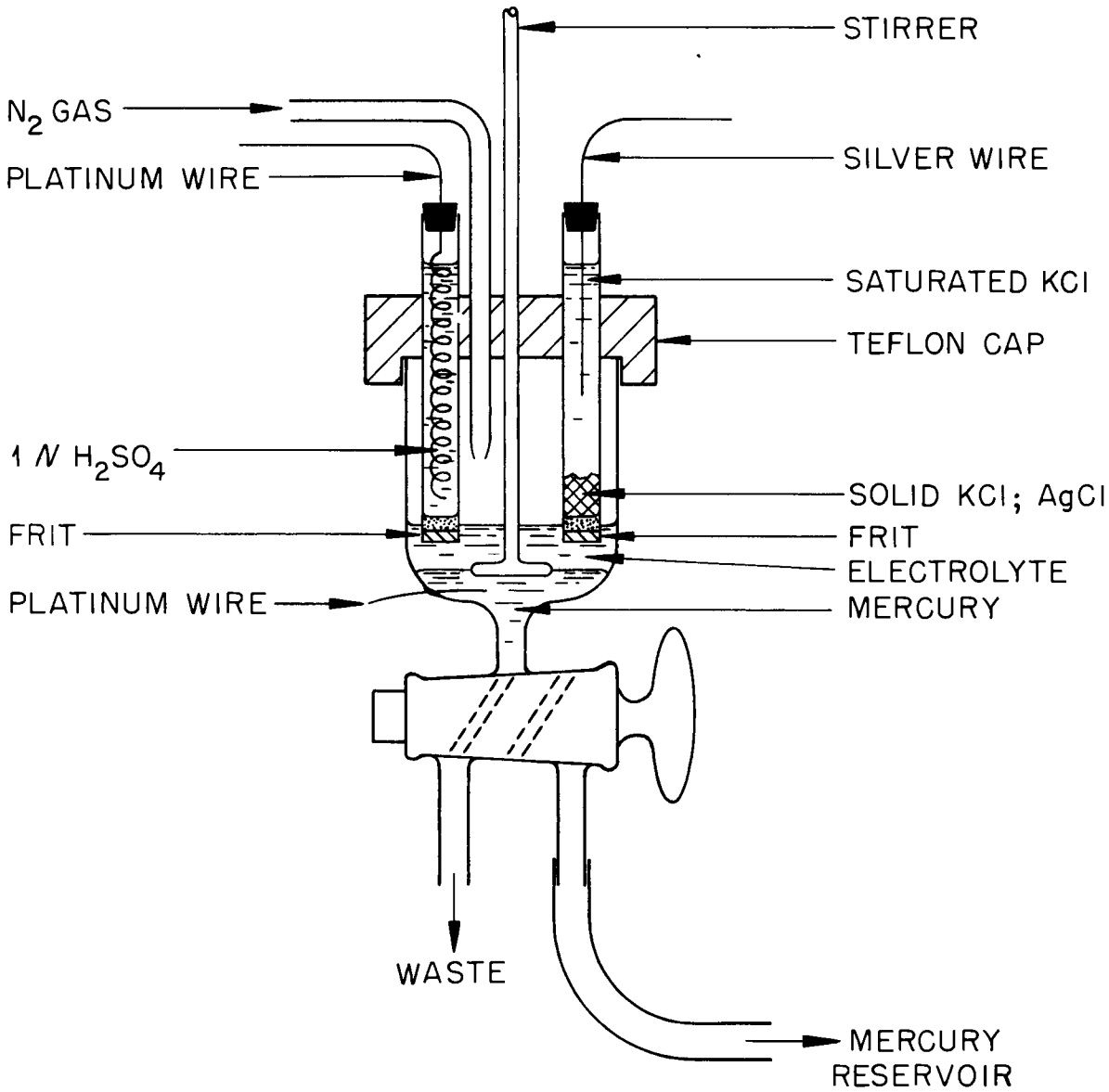

Figure 1
DIAGRAM OF COULOMETRIC TITRATION CELL

Fig. 2. Comparison of Small Cores with GCR-2.

UNCLASSIFIED
ORNL-LR-DWG. 39712

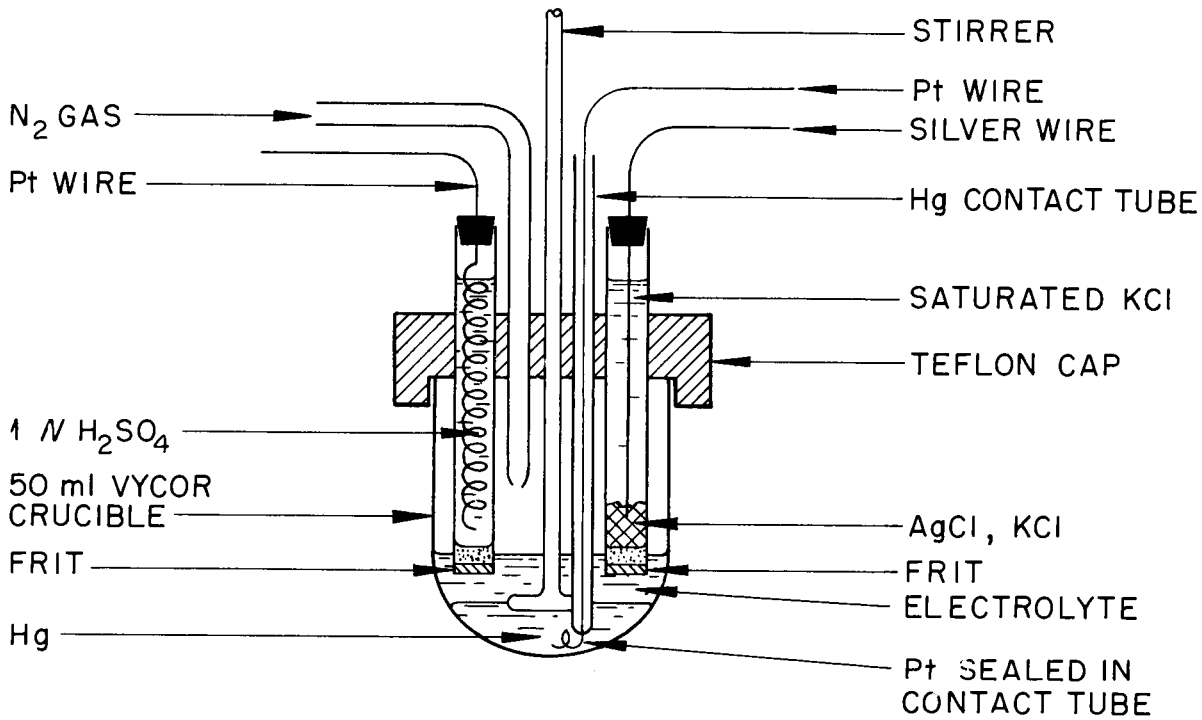

Fig. 3. Cell for Hexone Extraction and Coulometric Titration.

ORNL-2776
Chemistry-General
TID-4500 (14th ed.)

INTERNAL DISTRIBUTION

1. C. E. Center
2. Biology Library
3. Health Physics Library
4-5. Central Research Library
6. Reactor Experimental Engineering Library
7-26. Laboratory Records Department
27. Laboratory Records ORNL R. C.
28. A. M. Weinberg
29. L. B. Emlet (K-25)
30. J. P. Murray (Y-12)
31. J. A. Swartout
32. E. H. Taylor
33. E. D. Shipley
34. G. E. Boyd
35. M. T. Kelley
36. C. P. Keim
37. W. H. Jordan
38. R. R. Dickison
39. F. L. Culler
40. S. C. Lind
41. A. H. Snell
42. A. Hollaender
43. K. Z. Morgan
44. W. D. Shults
45. A. S. Householder
46. R. S. Livingston
47. D. S. Billington
48. C. E. Winters
49. H. E. Seagren
50. D. Phillips
51. J. A. Lane
52. M. J. Skinner
53. E. Shank
54. B. B. Hobbs
55. E. L. Blevins
56. C. L. Burros
57. J. H. Cooper
58. L. T. Corbin
59. C. Feldman
60. D. J. Fisher
61. U. Koskela
62. W. R. Laing
63. C. E. Lamb
64. D. E. LaValle
65. G. W. Leddicotte
66. S. A. Reynolds
67. P. F. Thomason
68. T. E. Willmarth
69. G. R. Wilson
70. E. I. Wyatt
71. L. J. Brady
72. H. P. House
73. J. R. Lund
74. E. C. Lynn
75. O. Menis
76. A. S. Meyer, Jr.
77. C. D. Susano
78. C. K. Talbott
79. W. F. Vaughan
80. J. C. White
81. H. P. Raaen
82. J. A. Norris
83. D. L. Manning
84. T. C. Rains
85. A. E. Cameron
86. D. N. Hume (consultant)
87. N. H. Furman (consultant)
88. C. E. Larson (consultant)
89. L. L. Merritt (consultant)
90. H. A. Laitinen (consultant)
91. G. Friedlander (consultant)
92. ORNL - Y-12 Technical Library, Document Reference Section

EXTERNAL DISTRIBUTION

93. Division of Research and Development, AEC, ORO
94. C. F. Metz, Los Alamos Scientific Laboratory, Los Alamos
95. F. Scott, Hanford, Richland, Wash.
96. J. T. Byrne, Dow Chemical Co., Boulder, Colo.
97. G. Booman, Phillips Petroleum Co., Idaho Falls
98-660. Given distribution as shown in TID-4500 (14th ed.) under Chemistry-General category (75 copies - OTS)