MARTIN MARIETTA ENERGY SYSTEMS LIBRARIES
3 4456 0361407 9

CRL 133
CENTRAL RESEARCH LIBRARY
DOCUMENT COLLECTION

ORNL-2759
Reactors-Power
TID-4500 (14th ed.)

A PRELIMINARY STUDY OF A DIRECT-CYCLE STEAM-COOLED REACTOR FOR MERCHANT SHIP PROPULSION

H. L. Falkenberry
R. S. Holcomb
G. Samuels

CENTRAL RESEARCH LIBRARY
DOCUMENT COLLECTION
LIBRARY LOAN COPY
DO NOT TRANSFER TO ANOTHER PERSON
If you wish someone else to see this document, send in name with document and the library will arrange a loan.

OAK RIDGE NATIONAL LABORATORY
operated by
UNION CARBIDE CORPORATION
for the
U.S. ATOMIC ENERGY COMMISSION

Printed in USA. Price $0.75. Available from the

Office of Technical Services
Department of Commerce
Washington 25, D.C.

LEGAL NOTICE

This report was prepared as an account of Government sponsored work. Neither the United States, nor the Commission, nor any person acting on behalf of the Commission:

A. Makes any warranty or representation, expressed or implied, with respect to the accuracy, completeness, or usefulness of the information contained in this report, or that the use of any information, apparatus, method, or process disclosed in this report may not infringe privately owned rights; or

B. Assumes any liabilities with respect to the use of, or for damages resulting from the use of any information, apparatus, method, or process disclosed in this report.

As used in the above, "person acting on behalf of the Commission" includes any employee or contractor of the Commission, or employee of such contractor, to the extent that such employee or contractor of the Commission, or employee of such contractor prepares, disseminates, or provides access to, any information pursuant to his employment or contract with the Commission, or his employment with such contractor.

ORNL-2759
Reactors-Power
TID-4500 (14th ed.)

Contract No. W-7405-eng-26

REACTOR PROJECTS DIVISION

A PRELIMINARY STUDY OF A DIRECT-CYCLE STEAM-COOLED REACTOR FOR MERCHANT SHIP PROPULSION

H. L. Falkenberry, R. S. Holcomb,
and G. Samuels

DATE ISSUED
SEP 8 1959

OAK RIDGE NATIONAL LABORATORY
Oak Ridge, Tennessee
operated by
UNION CARBIDE CORPORATION
for the
U.S. ATOMIC ENERGY COMMISSION

MARTIN MARIETTA ENERGY SYSTEMS LIBRARIES
3 4456 0361407 9

CONTENTS

ABSTRACT 1

INTRODUCTION 1

GENERAL DESCRIPTION 2
- Reactor Core 2
- Fuel Elements 6
- Propulsion Plant 6
- Auxiliaries 6

REACTOR PERFORMANCE 9
- Coolant Characteristics 9
- Heat Transfer 9
- Core Pressure Drop 10
- Moderator Heat Loss 10

COOLANT SYSTEM 10
- Loeffler Boiler 10
- Steam Circulators 11
- Blower Drives 11

HAZARDS 11
- Effect of Fuel Element Cladding Failures 12
- Rupture of Reactor Vessel or Primary Coolant System Piping 13
- Reactivity Excursion 13
- Loss of Coolant Flow 13
- Normal Crew Exposure to Radioactivity from the Steam Cycle Equipment During Operation 13
- Ability to Dispose of Reactor Heat Safely in the Event of Loss of the Ship's Main Power Supply and/or Trip-out of the Main Turbine 14
- Contamination of Hotel-Load Steam 14
- Disposal of Radioactive Wastes 14

CONTAINMENT 15

CONCLUSIONS 15

A PRELIMINARY STUDY OF A DIRECT-CYCLE STEAM-COOLED REACTOR FOR MERCHANT SHIP PROPULSION

H. L. Falkenberry[1] R. S. Holcomb G. Samuels

ABSTRACT

A preliminary study was made of a steam-cooled, water-moderated reactor for a 20,000-shp power plant for a merchant ship. It appears that this plant is not attractive for marine applications because, for maritime service, the hazards associated with the use of radioactive steam in the propulsion and auxiliary machinery appear to outweigh the advantages of the direct cycle. This reactor type does have interesting possibilities for central-station applications, but considerable developmental work would be required.

INTRODUCTION

This report describes a concept of a steam-cooled reactor used in conjunction with the Loeffler-type boiler[2] system for the propulsion of a merchant ship. Steam has been considered in other ORNL studies as a possible coolant[3] for a gas-cooled reactor, and the Loeffler-type boiler has been considered in connection with the molten-salt reactor.[4] In the Loeffler boiler system a portion of the superheated steam leaving the reactor is mixed with feed water to generate more saturated steam to pass through the reactor coolant channels. The remaining fraction of superheated steam is delivered directly to the turbine. This reactor–steam generator combination is capable of producing steam at temperatures and pressures commensurate with modern power plant practice. The high pressure and temperatures are desirable, not only to give improved turbine-cycle efficiency, but also to reduce the steam pumping power requirements of the Loeffler boiler system. While this study is devoted to the application of this reactor–steam generator combination to marine propulsion, the concept may have central-station generating plant possibilities. Such a study has been conducted recently by the Nuclear Development Corporation of America.[5]

A small-core reactor was considered that seemed particularly suited to ship propulsion. Present-day merchant-ship propulsion systems utilize steam at approximately 850 psi and 850°F, and it should be noted that steam is somewhat less efficient as a reactor coolant at these conditions than at the 1500-psi, 1000°F condition initially contemplated.

No physics calculations were included in this preliminary investigation, and the reactor core, as described, was subsequently found to be undermoderated. The lattice pitch should be increased, and there would be a resulting increase in pressure vessel diameter. These changes would not, however, affect the conclusions of this study.

There are several particularly attractive features of this plant: (1) Steam can be supplied at "conventional" temperatures and pressures. (2) Water is easier to store and to provide in case of emergency on the high seas than would be the case for most gaseous coolants. (3) High-pressure steam is a very effective reactor coolant because of its high heat capacity and low pumping power requirements. (4) This system eliminates

[1] Tennessee Valley Authority.

[2] W. N. Barnard, F. O. Ellenwood, and C. F. Hirshfeld, *Heat Power Engineering*, part II, p 109, Wiley, New York, 1955.

[3] *The ORNL Gas-Cooled Reactor, Advanced Concepts*, ORNL-2510 (Oct. 2, 1958).

[4] H. G. McPherson *et al.*, *A Preliminary Study of a Graphite Moderated Molten Salt Power Reactor*, ORNL CF-59-1-26 (Jan. 13, 1959).

[5] *Steam-Cooled Reactor Feasibility Study, Steam Water Reactor*, vols I and II, NDA-2562-1 (Aug. 15, 1958).

a large part of the intermediate heat exchanger (steam generator) costs which were found to be a major contributing factor to excessive capital costs in a previous study of small-core gas-cooled reactors.[6] (5) Reactor coolant exit temperatures are not degraded by intermediate heat exchangers before utilization in the turbomachinery.

Features that detract somewhat from the utility of this reactor concept, particularly for ship propulsion, were also noted: (1) In order for radiation tolerances in the machinery spaces to remain reasonable, all fuel elements must maintain cladding integrity. (2) The turbine would require some additional shaft sealing provisions. (3) The Loeffler boiler system, as designed, would be somewhat limited as a natural-convection cooler of the reactor because the steam nozzles are normally under water in the drum. However, if the water level could be lowered a few inches below the nozzles, this seal could be eliminated, and natural convection could be allowed to proceed if the convection loop provided sufficient head. (4) In the event of a fuel element failure, the entire steam system would become highly radioactive. This is considered to be much less of a problem in the case of central-station reactors than in a marine propulsion installation where space is at a premium. There are vital services that must be performed by ships' auxiliary machinery (likely to be located with and around other main steam units) which must be accessible for continued operation. This would include the generators, domestic water system, sanitary water system, auxiliary oil-fired boiler, and perhaps steering gear (depending on whether all machinery is housed in the stern or in the midships section of the ship). This problem could be eliminated by the incorporation of an intermediate heat exchanger in the steam system, but this would add to the capital cost and reduce the operating efficiency. (5) There is some doubt as to power density range over which the seven-rod fuel cluster is sufficiently stable to be used in its present state of development.[7,8] This should not be a permanent drawback, as the matter of developing a stable fuel element for gas-cooled reactors is receiving much attention at ORNL, for the EGCR, and at other sites, for other reactors.

The service requirements of this reactor are postulated to be the same as those of the NS "Savannah." Basically, these requirements are:

20,000 nominal shp

50,000 lb/hr auxiliary ship's service steam to be supplied at 150 psi

1500 kw generator power (two 750-kw units)

The generator power is approximately 1500 kw less than for the NS "Savannah" because the electrically powered primary coolant pumps have been eliminated.

GENERAL DESCRIPTION

Plant performance characteristics and design data are presented in Table 1, and Fig. 1 shows the flow diagram and steam rate and indicates the general plant considerations. Steam from the reactor is piped directly to the main propulsion turbines, to the ship's service electrical generator sets, and to the turbine-driven steam blowers used for circulating steam through the reactor. Since the possibility exists of varying degrees of contamination in the main steam system, a double heat exchanger with an intermediate heat transport loop is suggested as a means of providing non-radioactive steam for distribution throughout the ship.

Reactor Core

The moderator of the reactor chosen for this study is water, and the reflector is beryllium oxide and water. Heat is removed by forced circulation of steam in a single pass through the reactor fuel channels. The steam conditions were chosen to conform to present-day marine practice, where 850 psia and 850°F steam conditions at the turbine inlet are used on vessels with power plants in the range of 20,000 shp.

Saturated steam at 850 psi from the Loeffler boiler drum is compressed in the steam blowers

[6] *A Study of Design Considerations of High-Pressure Gas-Cooled Reactors with Small Cores*, ORNL CF-58-7-55 (to be issued).

[7] L. G. Epel and W. T. Furgerson, *Temperature Structure in Gas-Cooled Reactor Fuel Elements and Coolant Channels*, ORNL CF-58-5-97 (May 27, 1958).

[8] W. T. Furgerson, *Comments on GCR Fuel Element Design*, ORNL CF-58-7-47 (July 10, 1958).

Table 1. Plant Performance ond Design Data

General	
Reactor thermal power	73 Mw
Shaft power	20,000 shp
Reactor steam flow	964,000 lb/hr
Propulsion turbine steam flow	150,240 lb/hr
Propulsion turbine heat rate	7360 $Btu \cdot hp^{-1} \cdot hr^{-1}$
Reactor Core	
Moderator	Water
Core height	10 ft
Core diameter (active)	42 in.
Number of fuel channels	110
Lattice pitch (triangular)	3.55 in.
Pressure tube material	M-388 aluminum alloy
Pressure tube OD	3.425 in.
Pressure tube wall thickness	0.0625 in.
Fuel channel ID	2.770 in.
Fuel channel insulation	Aluminum oxide
Insulation thickness	0.250 in.
Insulation liner	Type 304 stainless steel
Liner thickness	0.010 in.
Side reflector	BeO (Al clad) + H_2O
BeO reflector thickness	5.5 in.
H_2O reflector thickness	7.0 in.
Fuel Element	
Fuel composition	Partially enriched UO_2
UO_2 slug OD	0.71 in.
UO_2 slug ID	0.32 in.
UO_2 slug length	0.50 in.
UO_2 density	10.4 g/cm^3
Number of slugs per capsule	75
Capsule material	Type 304 stainless steel
Capsule OD	0.75 in.
Capsule wall thickness	0.020 in.
Capsule length	40 in.
Number of capsules per element	7
Number of elements per channel	3
Element external surface, ft^2 per ft of element	1.375
Reactor Pressure Vessel	
Shape	Cylindrical
Inside diameter	68 in.
Over-all height	18 ft
Wall thickness	2 in.
Material	Carbon steel (stainless-steel-clad inside)
Stainless steel cladding thickness	0.25 in.
Design pressure	900 psia
Design stress	15,000 psi

Table 1 (continued)

Core Flow and Heat Transfer	
Coolant	Steam
Reactor inlet pressure	880 psia
Core pressure drop	16.1 psi
Steam velocity, avg	131 fps
Channel hydraulic diameter	0.472 in.
Maximum design surface temperature	1200°F
Steam inlet temperature	525°F
Steam exit temperature	860°F
Axial power distribution	1.43
Radial power distribution	1.5
Over-all power distribution	2.15
Maximum heat flux	340,000 $Btu \cdot hr^{-1} \cdot ft^{-2}$
Average heat flux	158,000 $Btu \cdot hr^{-1} \cdot ft^{-2}$

Steam Blowers	
Type	Single-stage centrifugal
Number	3 (2 operating and 1 spare)
Inlet pressure	850 psia
Pressure rise	30 psi
Capacity	4530 cfm
Pumping power per blower	750 hp
Speed	3600 rpm
Drive	Steam turbine

to 880 psi and passed directly into the reactor core. This steam is superheated in a single pass through the fuel channels to 860°F. At the reactor outlet the steam flow is divided to supply the Loeffler boiler drum with sufficient heat to evaporate the incoming feed water and to supply the main turbine, the ship's service turbogenerator, the steam blower turbines, and the heat exchanger system required to provide 50,000 lb/hr of uncontaminated auxiliary ship's service steam.

The 2-in.-thick carbon steel pressure vessel is clad internally with stainless steel. It is cylindrical with a 68-in. ID and an over-all height of 18 ft. The active core consists of 110 circular fuel channels, 2.77 in. in diameter, set on a triangular pitch. The water moderator is isolated from the fuel and coolant channels by means of circular aluminum tubes, 3.425 in. OD with 0.0625-in.-thick walls. The aluminum tube walls are protected from the hot coolant by a 0.250-in.-thick layer of aluminum oxide insulation contained in the annulus between a thin stainless steel tube and the aluminum tube wall. The seven-rod fuel cluster of stainless-steel-clad uranium dioxide pellets is supported inside the stainless steel tube.

A 5.5-in.-thick beryllium oxide reflector is located adjacent to the active core, and the beryllium oxide is surrounded by a 7-in.-thick water reflector. A 1-in.-thick steel thermal shield is situated just inside the pressure vessel wall. The steam passing through the fuel tubes is isolated from the water moderator surrounding the tubes except for an open pressure-equalizing connection.

Moderator cooling is achieved by using the moderator zone of the reactor as the final stage of feed-water heating. For this study, an arbitrary factor of 5% of the reactor core power was assumed to represent the energy deposited in the moderator.

On-stream loading and discharging of fuel is not considered either necessary or desirable for propulsion applications. The loading and unloading is accomplished with the reactor shut down by removing the top head of the pressure

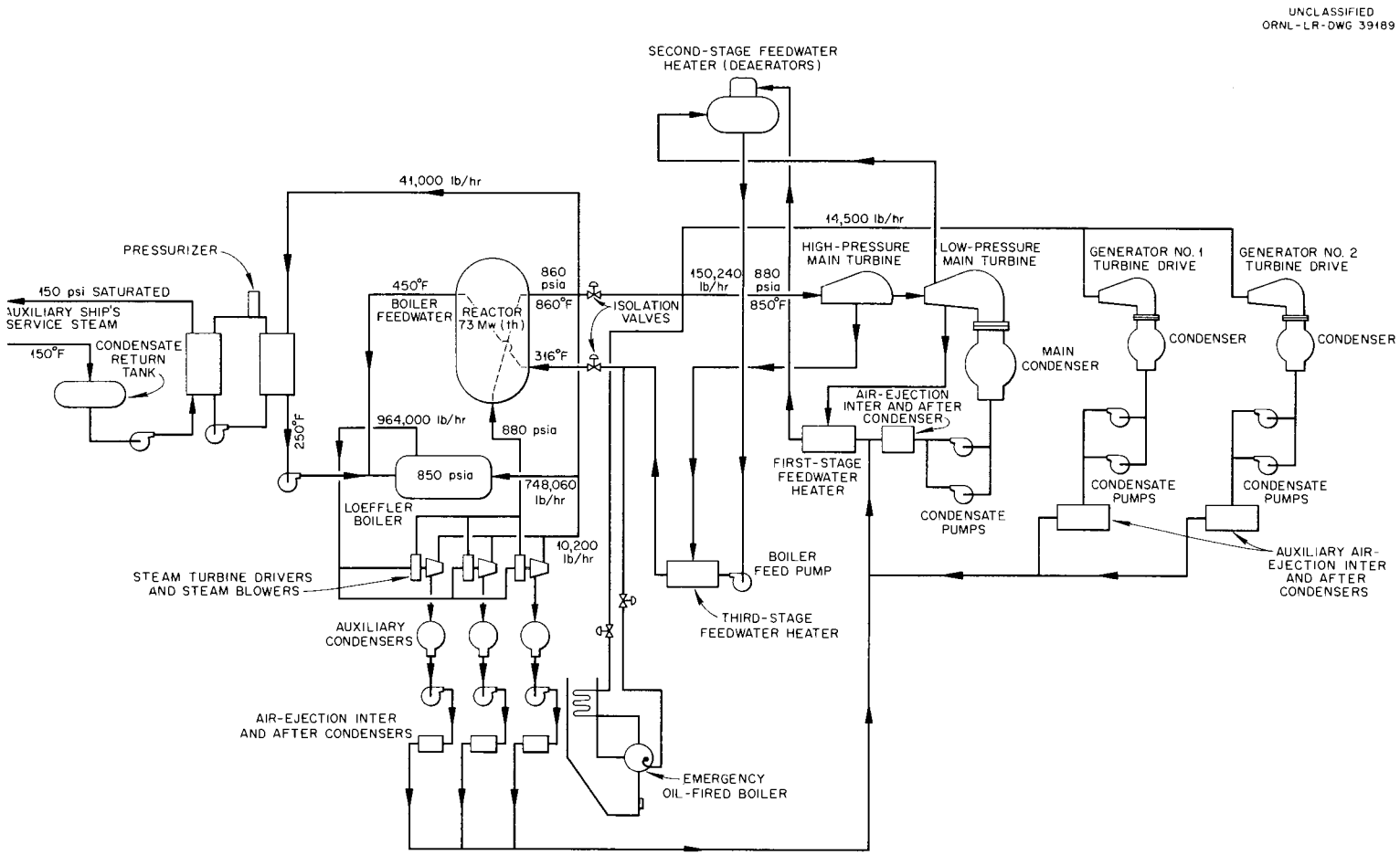

Fig. 1. Flow Diagram of a Direct-Cycle, Steam-Cooled Reactor for Ship Propulsion.

vessel, breaking the outlet steam line, and unbolting and lifting out the top steam header plate. The design of the fuel-handling machine has not been undertaken in this study.

The reactor core was considered, as shown in Fig. 2, to contain ten control rod channels; however, the control rod requirements have not been studied.

Fuel Elements

The seven-rod-cluster fuel element designed for the GCR-2 (refs 7–9) was used as the fuel element in this design study. The fuel enrichment, however, will probably be higher for this reactor. The principal features of this fuel element are given in Table 1. A schematic drawing of the fuel element assembly is presented as Fig. 3. The design of a sound support for the fuel elements was not undertaken, but a problem is presented by the thin wall of the stainless steel steam-containing tube. It would probably be necessary to transmit the fuel loading to the vertical Al_2O_3 insulation column located just inside the aluminum pressure tube.

Propulsion Plant

The propulsion plant utilizes "conventional" marine steam conditions and machinery throughout, with the exception of shaft seals and venting arrangements. Steam is delivered to the high-pressure turbine inlet at 850 psia and 850°F. Steam at these same conditions is used by the ship's service generators, the boiler feed pump drive turbine, and the steam blower drive turbines.

A three-stage regenerative feed-water heating cycle is employed. The equipment in this cycle consists of air ejectors to remove noncondensable gases from the main condenser, two shell-and-tube feed-water heaters, and one direct-contact heater, which also serves as a deaerator. Two stages of pumping are used to deliver feed water to the steam generator at the necessary pressure.

Unless an intermediate heat exchanger is used between the reactor coolant steam and the turbine working fluid, there is a possibility that gaseous, liquid, or solid radioactive material can pass through the cycle equipment. This could lead to a discharge of radioactive gases into the machinery spaces sufficient to raise the activity level to above the maximum permissible level. Therefore the air-ejector vent and the deaerator vent must be outside the machinery spaces so that the radioactive gases can be discharged directly to the outside atmosphere.

The installation of an overboard or outside vent does not completely solve the problem, and for operation in restricted waters (near land, or in harbors) it would be necessary to provide storage for these gases. Space is usually at a premium aboard ship, and it is likely that these gases would have to be stored under pressure. Since storage may be necessary and since additional, uneconomical equipment would be required if the radioactive gases were to be separated from the other gases at the vents, storage of the entire volume of vented gases would be required. This provides an added incentive to reduce air inleakage to the subatmospheric pressure portion of the steam cycle wherever possible. The condensate pumps are electrically driven and deliver water to the deaerator tank at pressures less than 100 psi. The steam-turbine-driven boiler feed pumps raise the pressure of the feed water from the deaerator tank sufficiently to overcome the boiler pressure. The main and auxiliary condensers are cooled by sea water and are designed to maintain an absolute pressure of about 1.5 in. Hg.

Auxiliaries

Ship's Service Steam Generator. – A maximum load of 50,000 lb/hr of auxiliary steam is specified for use outside the machinery spaces. As discussed more fully in the hazards section of this report, two heat exchangers and an intermediate heat transport loop are considered to be the minimum precautions necessary to assure that there will be no radioactive contamination of steam which may be used directly in the galley, in the laundry, and in other crew and passenger areas.

A 150°F condensate return was arbitrarily selected. This results in a load of 10.6×10^6 Btu/hr on this system. The heat supply was taken directly from the reactor outlet in order to minimize pumping power for steam and water flow.

[9] *The ORNL Gas-Cooled Reactor*, part 2, sec 4, ORNL-2500 (April 1, 1958).

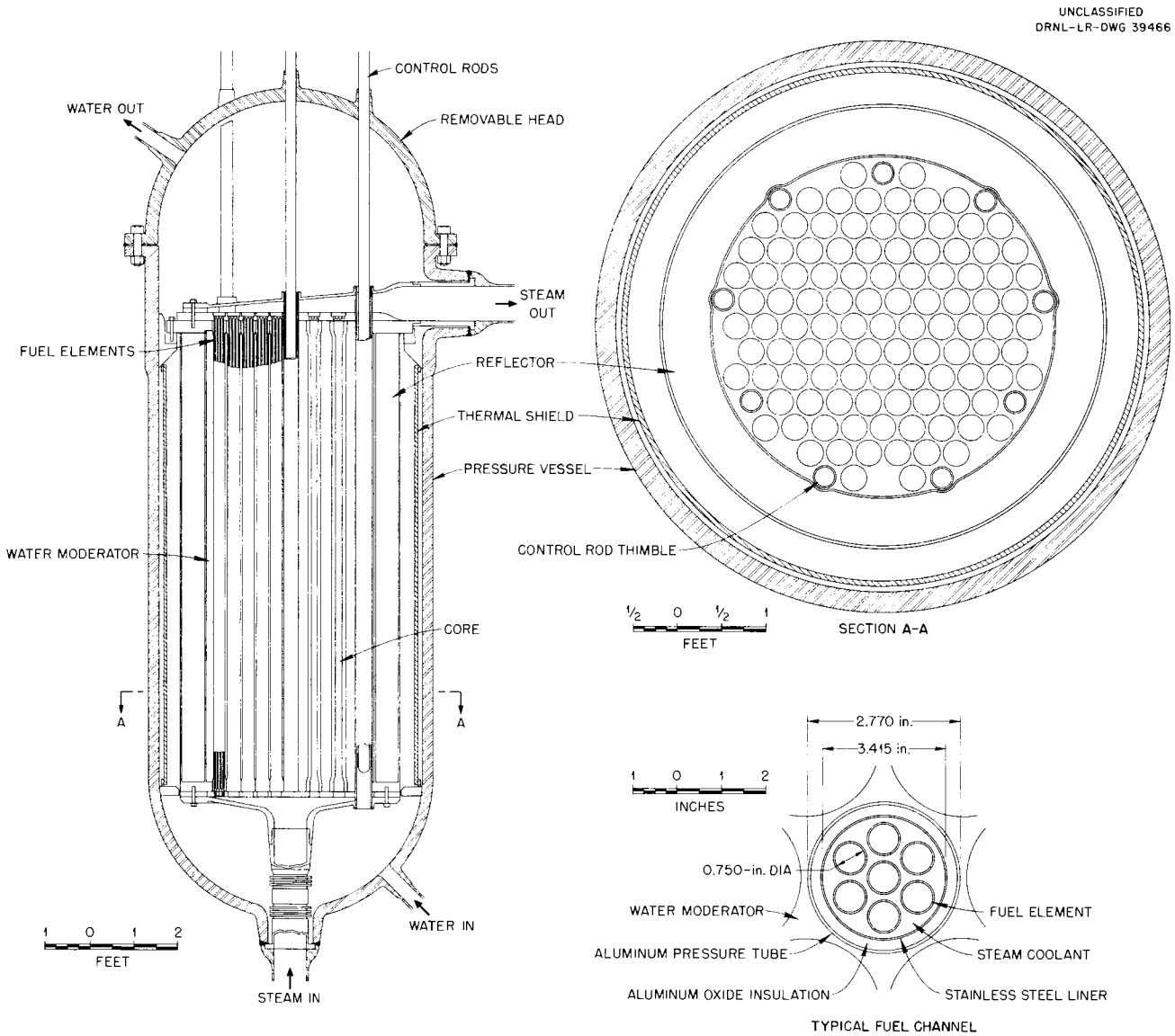

Fig. 2. Preliminary Design of a Steam-Cooled, Water-Moderated Reactor.

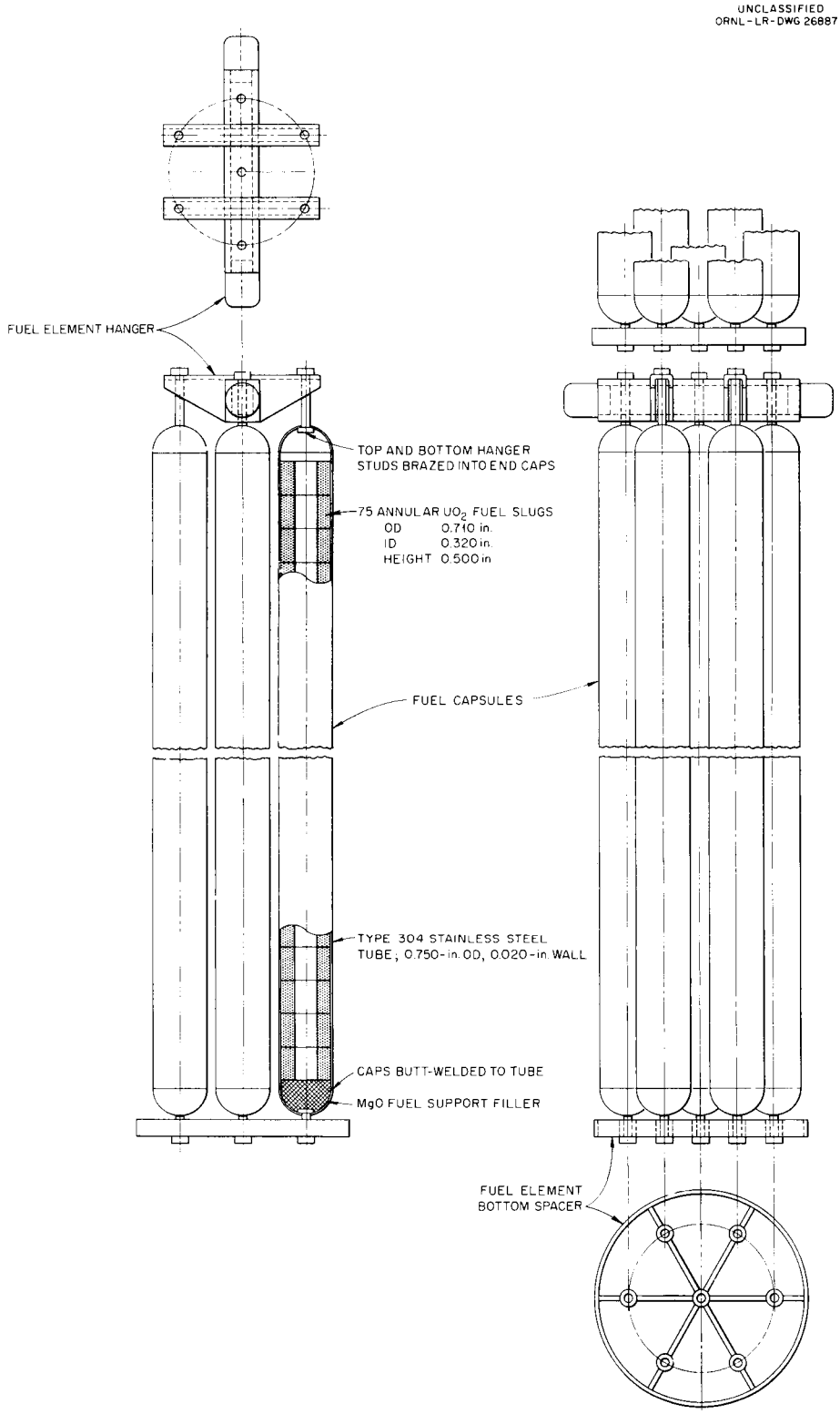

Fig. 3. Typical Fuel Assembly.

Auxiliary Boiler. – A 750-hp auxiliary boiler is provided for "take home" power in case the reactor is inoperable.

REACTOR PERFORMANCE

Coolant Characteristics

Steam is attractive for use as a reactor coolant for several reasons. It is readily available and inexpensive. It has a sufficiently low activation cross section for the coolant piping to require very little shielding, and its short-lived activity allows quick access to the coolant system. It is compatible with the stainless steel fuel cladding required for a high-temperature thermodynamic cycle. It makes possible the use of a direct cycle with high thermal efficiency in utilizing conventional turbine designs.

The merit of steam as a heat transfer medium relative to other gases depends upon the system pressure. At lower pressures, steam compares unfavorably to He and CO_2, but, as the pressure is increased, its position improves so that it is comparable to He and CO_2 at about 1000 psi. At higher pressures it is superior to He and CO_2 because both the specific heat and thermal conductivity of steam increase with pressure, while these properties are practically independent of pressure for the other gases. The specific heat of steam is at a maximum at the saturation temperature and decreases as the temperature is increased. The curve falls sharply, at first, and then becomes fairly flat after about 300°F of superheat. The thermal conductivity first decreases with temperature, reaches a minimum, and increases at higher temperatures. The viscosity increases with temperature in a straight-line relationship.

Heat Transfer

The heat transfer coefficients were calculated from the Dittus-Boelter equation

$$h = \frac{0.023GC_p}{(\mathrm{Pr})^{2/3}(\mathrm{Re})^{0.2}} .$$

A plot of heat transfer coefficient vs length along the coolant channel at the center of the reactor is shown in Fig. 4. The high specific heat and thermal conductivity of the saturated steam at the inlet to the channel result in very good heat transfer coefficients at the inlet end of the reactor. The coefficient at the mid-point along the channel where the maximum heat flux occurs is about 20% lower than at the inlet.

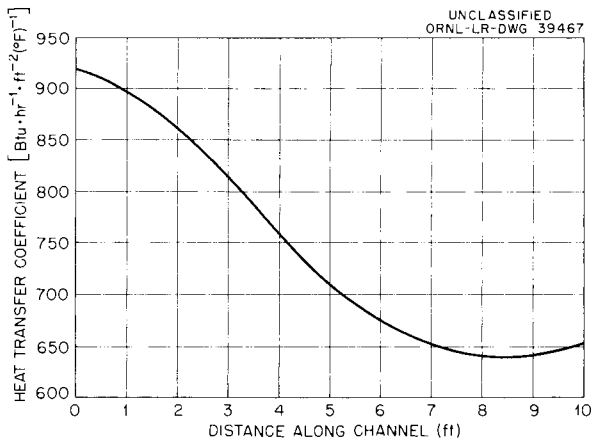

Fig. 4. Heat Transfer Coefficient vs Distance Along Coolant Channel.

The average power per foot of length of coolant channel was fixed by the reactor power level and the length and number of channels. The steam flow rate was determined by the power level and the enthalpy rise through the reactor. The fuel element geometry gives the surface area and consequently the average heat flux. The axial power distribution was assumed to be a cutoff cosine curve with a peak-to-average ratio of 1.43, and the radial power distribution was assumed to be a cosine curve with a peak-to-average ratio of 1.5. The peak-to-average heat flux in the reactor was then 2.15. The coolant channel size was then selected to give heat transfer coefficients which would give the required heat flux for a maximum fuel element surface temperature of approximately 1200°F. The steam temperature and fuel element surface temperature as a function of length along the center channel are given in Fig. 5.

The fuel element surface temperature will exceed the 1200°F nominal maximum because of variations in the steam velocity, the hydraulic diameter, and the flux around the seven fuel rods. The actual variation of the surface temperature of the fuel rods is very difficult, if not impossible, to predict, and in-pile testing of a fuel channel would be necessary to determine the maximum temperature as a function of steam flow and heat flux.

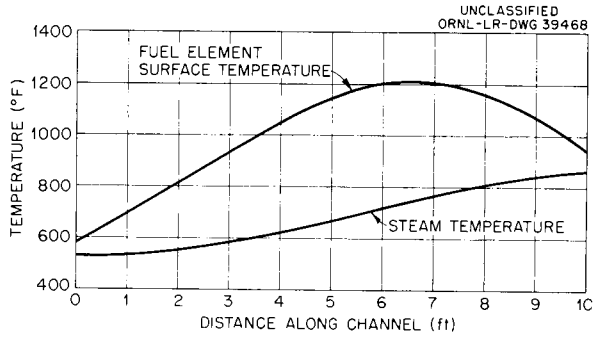

Fig. 5. Steam and Fuel Element Temperature vs Distance Along Coolant Channel.

Core Pressure Drop

The pressure drop through the fuel channel is the sum of the head loss due to friction and the head loss due to contraction and expansion about the fuel element spacers. The friction loss was calculated by the use of the head loss equation for incompressible flow, using the average steam velocity and the friction factor for smooth tubes at the average Reynolds number. To achieve the desired heat transfer coefficients, the average velocity should be 131 fps and the hydraulic diameter should be 0.472 in. The spacer loss, based on the average velocity, was estimated to be one velocity head. The total head loss in the channel was estimated to be 1622 ft-lb/lb, which corresponds to a 16.1-psi pressure drop at the average steam density. The total pressure drop in the reactor steam circuit was estimated to be 30 psi.

Moderator Heat Loss

The presence of the colder moderator water surrounding the fuel channels presents some problems in maintaining the desired heat transfer performance of the reactor. The higher the moderator temperature, the lower is the heat loss, but for neutron economy it is desirable to make the moderator temperature as low as possible. To minimize the pressure tube wall thickness, the moderator pressure must be the same as that of the steam. Thus the moderator temperature must be held well below the steam temperature to prevent boiling of the moderator. The temperature is further limited by the strength of the aluminum pressure tube. A moderator inlet temperature of 400°F was selected as the best compromise for these factors.

Three basic approaches to the insulation of the channel were considered: an annulus through which a small amount of coolant steam could flow and form an almost stagnant layer of steam; a gas-filled insulating sleeve; and a low-conductivity solid insulating sleeve. The chief problem with the steam gap is that there would be condensation on the moderator tube which would reduce its effectiveness. The gas-filled sleeve would have to be built leak-tight and be capable of withstanding the pressure differential between the steam and insulating gas. A sleeve of a low-conductivity material, such as porous aluminum oxide or magnesium oxide, with a stainless steel liner on the steam side appears to be a more reliable insulation than the steam annulus. In addition, a thinner stainless steel liner is required than for the gas-filled sleeve. The stainless steel liner for the solid insulator might have to be sealed to protect the insulation from attack by the steam and to prevent the steam from coming in contact with the aluminum pressure tube.

The solid insulation is far from a perfect solution to the heat loss problem. The present design using an aluminum oxide sleeve 0.250 in. thick gives a heat loss of about 6% of the reactor power to the moderator. A low-density fiber or packed-particle type of insulation which would be stable at the high temperature and radiation levels would reduce this heat loss. A considerable amount of developmental work would be necessary to achieve a satisfactory design for the insulating sleeve.

COOLANT SYSTEM

Loeffler Boiler

The Loeffler boiler is a direct-contact heat exchanger in which part of the superheated steam leaving the reactor gives up heat to the condensate returning from the turbine to produce more saturated steam. The boiler consists of a horizontal, cylindrical vessel with superheated steam inlet headers and diffusers, a condensate inlet, and a saturated steam outlet. The water level at steady state is at the midplane of the vessel. The superheated steam is discharged from the diffusers beneath the water. The most significant design criterion for this type of boiler is the

velocity at which the saturated steam leaves the water surface. The surface velocity determines the amount of liquid carry-over in the steam. The present design is based on a steam surface velocity of 30 fpm, which for full steam flow requires 300 ft^2 of water surface. This is provided by four vessels 5 ft in diameter and 15 ft in length. The superheated steam is discharged from five diffusers per vessel at a velocity of 5 fps. Experimental work is needed to establish the maximum surface velocity which can be utilized to produce high-quality steam. It is possible that the size of the boilers could be reduced by designing for higher surface velocities and removing liquid carry-over in separators.

The advantage of the Loeffler boiler for use in conventional marine steam plants is that raw untreated feed water may be used. The solids are concentrated in the desuperheater-boiler drums and removed by blowdown. In the proposed reactor system the use of untreated feed water could not be tolerated, since the entire steam system could become contaminated by neutron-activated solids carried over from the boiler. The Loeffler cycle serves only to provide a source of steam for the reactor.

An alternate method of supplying steam to the reactor is a spray chamber or a series of chambers and separators. In this type of desuperheater-boiler the feed water would be sprayed into the superheated steam. The excess spray would be removed by separators and returned to the feed-water sprayers. Although this system was not investigated in detail, it appears attractive from both space and cost considerations.

Steam Circulators

Blowers are required to maintain the flow of steam in the coolant system. The blowers must increase the steam pressure by an amount equal to the pressure loss in passing through the reactor, piping, and the boiler. The work which the blower must do is the energy equivalent of the system pressure drop at blower inlet conditions times the total weight flow. For a given pressure drop, the work per pound of fluid decreases as the density increases. The obvious location for the blower would seem to be between the boiler and the reactor inlet. However, the steam flow between the reactor outlet and the boiler is only 75% of the total steam flow, which tends to offset the decreased density when calculating the pumping power. The decreased weight flow, however, does not reduce the pumping power enough to compensate for the reduced density, and the pumping power is less with the blower located between the boiler and the reactor inlet.

The system pressure drop was estimated to be 30 psi. Assuming a blower efficiency of 80%, the required pumping power was 1500 hp. For increased reliability, it is desirable to use two blowers rather than one. The required performance could be met with two single-stage centrifugal blowers, each with a capacity of 4530 cfm, with a 21-in.-dia impeller tip operating at 3600 rpm. With a vaned diffuser and volute, the over-all diameter of the blower casing would be approximately 45 in. A third blower would be provided as a spare.

Blower Drives

A variable-speed drive is required for the steam blowers to meet the changing load requirements of the propulsion plant. This variable-speed drive could be provided by either a-c or d-c electric motors or by steam turbines. The d-c variable-speed motors require a d-c generator and considerable equipment for speed-changing. The a-c variable-speed motors require a variable-frequency generator. Both of these systems would consume more space and add more weight than the steam-turbine drive. In addition, the rating of the turbine-generators is reduced by half by using the steam-turbine drive. Two 750-hp steam turbines have been selected for operation, and an additional spare is suggested. Steam leakage through the seal between the turbine and the steam blower would present no problem because the pumping power loss is trivial.

HAZARDS

Only the hazards associated with machinery failure and with direct operation of the plant have been considered. The problems of collision and grounding, operating in harbors, etc., were neglected. The possible hazards considered were: (1) effects of ruptured fuel elements, (2) rupture of reactor vessel or main piping, (3) reactivity excursion, (4) loss of coolant, (5) normal crew exposure to activated turbine,

(6) ability to dispose of heat safely in the event of loss of ship's main power supply and/or trip-out of main turbine, (7) contamination of hotel-load steam, and (8) disposal of radioactive wastes. Each of these possibilities is considered in the following sections.

Effect of Fuel Element Cladding Failures

Every precaution would be taken, of course, during design of the reactor system and during the subsequent operations of fuel fabrication, loading, and initial testing to avoid any failure of fuel cladding in such a reactor. Nevertheless, such a failure must be anticipated.

It is postulated that a cladding failure would be limited to a small penetration through the stainless steel can and that this opening would allow accumulated fission product gases to be released from the capsule. Also, continued operation of the reactor would add additional fission products to the steam system.

There is little information available on the probable behavior of the fission gases following their release to the main steam system. During their radioactive decay sequence, the fission products released from the fuel element in gaseous form would pass through many non-gaseous elemental forms. Both gaseous and nongaseous decay products might continue to circulate with the steam and water; they might concentrate up to their solubility limits in the condensate and boiler feed-water systems; some might plate out in the piping, turbine, and heat exchangers; and others would be expected to be stripped from the steam cycle and vented through the deaerating feed-water heater and the air ejectors.

In the event of a fuel-cladding failure it would be desirable to allow continued operation of the reactor power plant up to some maximum permissible limit. This limit could be expected to be set by radioactivity levels in the machinery space as a result of fission product gases passing through the equipment or of the venting of more than the maximum permissible quantity of radioactive gases through the vents. It is not the purpose of this report to define these limits, but to point out that they may exist and must be considered in relation to any nuclear-powered vessel. This limitation is shared by the direct-cycle boiling-water reactor.

In the event of failure of many fuel capsules or in the event that highly radioactive fuel particulate matter were released, it might be necessary to isolate the steam in the reactor in order to avoid gross contamination of the entire machinery system. For this purpose, a quick-operating isolating valve in the main steam line is suggested at the point where the steam line emerges from the reactor containment tank, and another isolating valve should be installed in the boiler feed line.

Because of the generation of decay heat in the fuel elements in the reactor after shutdown, the above-mentioned isolation procedure would have to be supplemented by some method of removing reactor decay heat from the fuel elements within the isolated containment vessel.

In order to transport the residual and decay heat to be removed from the fuel elements, a great deal of reliability must be placed on the steam pumps, which are provided in triplicate, with any two capable of carrying the full reactor load. In order for the pressure not to continue to build up in the Loeffler steam generator system, the heat could be disposed of by pumping sea water through a steam-water exchanger located inside the containment vessel.

If the reactor containment vessel contains radioactive gases and perhaps particulate activity, some shielding must be provided around the containment vessel. One method of introducing this shielding, when necessary, without requiring the continual presence of the shield weight on the ship, is to provide a volume around the containment vessel which could be flooded with sea water in order to shield the engine room machinery space.

In addition to operation of the take-home plant in the event that the reactor plant is shut down by gross fuel element failure, other activities that must be carried on are: (1) operation of the emergency cooling system for the reactor, (2) operation of the auxiliary boiler to provide steam to one ship's service turbogenerator (for which the load would be limited during the emergency) to provide power for minimum lighting, navigation instruments, radio, and steering gear, (3) operation of fresh water system, sanitary water system, and fire protection system, and (4) provision of a reduced supply of auxiliary ship's service steam. The performance of these

services requires access to the machinery space by crew members.

The hazards associated with the failure of fuel element cladding also exist in the direct-cycle boiling-water reactor. They add many more problems than would exist if there were an intermediate heat exchanger between the fuel elements and the heat–power cycle working fluid. In fact, one recent proposal for a boiling-water reactor for maritime application has included an intermediate heat exchanger.[10]

Rupture of Reactor Vessel or Primary Coolant System Piping

The location of a rupture or failure in the primary coolant system would have an important bearing on the severity of the consequences. The design criteria given below would seem to be in order.

1. Since the possibility of simultaneous failure of some fuel element capsules and the primary coolant containment system cannot be ruled out, it would be necessary that any release of steam and water be restricted to the containment vessel. This could lead to a requirement for containment of the entire steam cycle equipment in addition to the reactor and boiler.

2. Some method of cooling the reactor fuel elements after shutdown would have to be provided. A failure of the primary coolant pressure vessel or piping could make it virtually impossible to supply a sufficient quantity of coolant through the reactor core to prevent overheating, failure of the cladding, and release of fission products, even if the reactor core had remained intact during the initial failure.

3. The machinery spaces not inside the containment vessel should be accessible after such an incident in order for the ship to proceed under its own power to arrange for discharge of passengers and cargo. This might require shielding of the containment vessel.

4. Any missiles resulting from such a rupture should not be capable of piercing the backup containment vessel. This would have to be considered for any nuclear-powered ship in which the primary coolant system would be under appreciable pressures.

Reactivity Excursion

The possibility of a reactivity excursion was not studied in any detail. One plausible source of added reactivity might come from the sudden flooding of the steam channels through the reactor core with water instead of the usual steam. A detailed analysis would be required to determine the extent of damage resulting from such an accident. It is possible that any resulting pressure surges could be relieved by relief valves, but the discharge of steam from the reactor to either the sea or the atmosphere might not be permissible. The particular reactor design described here is not known to involve any unusual nuclear hazards uncommon to water-moderated reactors.

Loss of Coolant Flow

The inclusion of the Loeffler boiler in the primary coolant circuit effectively blocks any natural-convection cooling. Therefore, particular attention must be devoted to the reliability of the steam blowers. Three blowers would probably be provided, any two of which would be capable of providing the rated reactor steam flow. In addition, an electrically driven unit would be needed as an emergency unit. The ship's emergency diesel generator set would have to be large enough to carry the electrical load required for minimum permissible removal of reactor decay heat, as well as other emergency services.

Normal Crew Exposure to Radioactivity from the Steam Cycle Equipment During Operation

The contributors to radioactive contamination of the coolant stream have been studied in the boiling-water reactor program at Argonne National Laboratory.[11] However, the EBWR fuel is clad with zirconium, and the buildup of radioactivity has been found to be primarily due to neutron captures in the water and in any impurities present.

With the use of stainless-steel-clad fuel elements, as is necessary because of the higher

---

[10] *Feasibility Investigation of a Closed Cycle Boiling Water Reactor for the Propulsion of a Merchant Ship*, AMF-GR-5-57 (Sept. 30, 1957).

[11] *Papers Presented at the Technical Briefing Session Held at Argonne National Laboratory*, TID-7535 (May 27, 1957).

operating temperatures of the fuel, some additional sources of contamination have been reported.[12] Many of these sources of contamination would be present in the case of the steam-cooled reactor. The sources are (1) recoils from the fuel capsule walls, (2) corrosion and erosion of the capsule wall, and (3) surface contamination of the fuel capsule walls. Defects in the capsule wall are treated in a separate section.

Studies made in connection with the APPR-1 coolant activation are also applicable,[13] at least in part. Similar studies indicate that for both the EBWR and the GCR-2 the equilibrium activity in the gas stream produces a dose rate within tolerance around the machinery, in the absence of a fuel capsule leak.

Ability to Dispose of Reactor Heat Safely in the Event of Loss of the Ship's Main Power Supply and/or Trip-Out of the Main Turbine

Emergency disposal of the reactor heat has not been considered in detail, but a turbine bypass equipped with a pressure reducer and desuperheater should be provided for emergency dumping of heat to the main condenser. This method of heat disposal could also be used at any time that fuel element leakage was not contributing to radioactivity in the steam. However, this method could not be used if the primary coolant piping or pressure vessel had failed or if the steam leaving the reactor were highly contaminated with fission products. This problem is not unique to this type of reactor, but, as discussed above, the presence of the Loeffler boiler drum is an effective deterrent to natural circulation.

Contamination of Hotel-Load Steam

The auxiliary ship's service load maximum of 50,000 lb/hr of 150-psi saturated steam is provided through an entirely separate circuit which is isolated from the reactor steam by two heat exchangers and an intermediate circulating loop.

Radioactivity monitors should be provided on the intermediate heat transport loop and on the steam outlet from the auxiliary ship's service steam generator. Any buildup of activity in the intermediate loop could not be tolerated, since this would defeat the purpose of providing the two mechanical barriers to the transport of any activity to steam used by crew or passengers.

Particular care would have to be taken to ensure that there were no interconnections installed between the primary steam system and the auxiliary ship's service system during the initial construction period and that adequate instruction and warnings were issued and/or posted to prevent interconnections later by the ship's operating personnel and during subsequent shipyard work.

Disposal of Radioactive Wastes

The major portion of the radioactivity associated with the reactor plant is contained within the fuel capsules, but, as noted above, there is some activity associated with the coolant stream. The gaseous portion of the radioactive contaminants might be expected to appear in the vent gases from the deaerating feed-water heater and the air ejectors. This gaseous activity, in the absence of fuel cladding defects, will consist primarily of N^{16} resulting from the $O(n,p)N$ reaction, plus some activated argon from atmospheric gases entrained in the steam. Normally, these vents could be piped to the atmosphere and discharged, since the N^{16} has only a 7-sec half life and the argon content would be quite low.

In the event of fuel capsule failures, these units could become activated to a much greater degree with fission product gases, and it would probably be necessary to provide emergency storage for these gases. Solid wastes might arise from the operation of a feed-water demineralizer unit. Normally, the activity of these wastes would be relatively low, but the activity could presumably be high in the event that a fuel cladding failure allowed larger-than-normal quantities of activity (other than gaseous) to circulate. There should be no great problem associated with holding this material in storage for orderly disposal.

While the necessity for boiler blowdown might conceivably arise, the presence of a demineralizer system and the large solids concentrations permissible in the Loeffler-type system are believed adequate for solids control without the use of blowdown.

---

[12] *The ORNL Gas-Cooled Reactor. Materials and Hazards*, ORNL-2505 (May 22, 1958).

[13] Alco Products, Inc., *APPR-1 Research and Development Program Shielding Experiments and Analysis*, APAE No. 35 (Oct. 15, 1958).

CONTAINMENT

It is believed at this time that containment would be required for the entire reactor and primary coolant loop, although the possibility exists that the reactor and the Loeffler boiler system described in this report could be installed inside the containment vessel with stop valves on the steam and feed-water lines that penetrate the containment walls.

CONCLUSIONS

The direct-cycle steam-cooled reactor plant is believed to be better suited for central-station applications than for marine propulsion service. The more or less "standard" merchant ship steam conditions are limited to approximately 850 psi at 850°F, and the performance of the reactor system described in this report is not particularly impressive at these relatively low pressures and temperatures. The consequences of a fuel element rupture would be much more difficult to deal with aboard ship than in a central-station generating plant. Many essential auxiliary equipment items must, of necessity, be located in close association with the main steam system, and these would almost certainly be inaccessible for operation or repairs if the main steam system should become highly contaminated. These problems would be much less objectionable in a land-based power station, in which a power plant outage with gross system contamination would never have the disastrous consequences that it might have at sea during a storm, for example. In the event of a reactor accident, the removal of fission product decay heat from the fuel elements would be more difficult to accomplish aboard ship, partly because of the limited head room available for the design of a good natural-convection system, and partly because aboard ship it would be difficult to apply emergency measures to effect a makeship emergency forced-circulation coolant flow.

Further developmental work would be required on at least the following items before technical feasibility of the plant could be established: (1) insulation for the coolant tubes, (2) fuel element supporting structure, and (3) thermally stable fuel elements. The fact that the steam must be used at high pressure for it to be an attractive reactor coolant tends to restrict the steam-cooled reactor to a relatively small pressure vessel. The development of a satisfactory pressure tube design would be a solution to this problem, however. Since steam is a chemically reactive coolant, problems of compatibility of coolant, moderator, fuel, and structural materials could be considerably greater than in the case of the inert-gas-cooled reactor.

INTERNAL DISTRIBUTION

1. J. W. Allen
2. M. Bender
3. D. S. Billington
4. E. P. Blizard
5. A. L. Boch
6. C. J. Borkowski
7. W. F. Boudreau
8. G. E. Boyd
9. E. J. Breeding
10. R. B. Briggs
11. C. E. Center (K-25)
12. R. A. Charpie
13. J. H. Coobs
14. J. A. Conlin
15. W. B. Cottrell
16. F. L. Culler
17. H. N. Culver
18. J. H. DeVan
19. L. M. Doney
20. D. A. Douglas
21. L. B. Emlet (K-25)
22. E. P. Epler
23. H. L. Falkenberry
24. J. Foster
25. A. P. Fraas
26. J. H. Frye, Jr.
27. G. A. Garrett (K-25)
28. J. M. Googin (Y-12)
29. B. L. Greenstreet
30. W. R. Grimes
31. E. Guth
32. R. F. Hibbs (Y-12)
33. H. W. Hoffman
34. R. S. Holcomb
35. A. Hollaender
36. A. S. Householder
37. W. H. Jordan
38. C. P. Keim
39. M. T. Kelley
40. J. J. Keyes
41. J. A. Lane
42. S. A. Levin (K-25)
43. R. S. Livingston
44. H. G. MacPherson
45. W. D. Manly
46. E. R. Mann
47. H. C. McCurdy
48. W. B. McDonald
49. H. F. McDuffie
50. F. R. McQuilkin
51. A. J. Miller
52. K. Z. Morgan
53. J. P. Murray (Y-12)
54. F. H. Neill
55. M. L. Nelson
56. L. G. Overholser
57. P. Patriarca
58. F. S. Patton (Y-12)
59. A. M. Perry
60. D. Phillips
61. M. E. Ramsey
62. P. M. Reyling
63. A. F. Rupp
64. G. Samuels
65. H. W. Savage
66. A. W. Savolainen
67. O. Sisman
68. E. D. Shipley
69. A. J. Shor
70. M. J. Skinner
71. A. H. Snell
72. E. Storto
73. R. D. Stulting
74. C. D. Susano
75. J. A. Swartout
76. E. H. Taylor
77. D. B. Trauger
78. E. Von Halle (K-25)
79. C. S. Walker
80. J. L. Wantland
81. A. M. Weinberg
82. J. C. White
83. E. A. Wick
84. G. C. Williams
85. C. E. Winters
86. J. Zasler

87-90. ORNL – Y-12 Technical Library, Document Reference Section

91-130. Laboratory Records Department

131. Laboratory Records Department, ORNL R.C.

132-133. Central Research Library

EXTERNAL DISTRIBUTION

134. Division of Reactor Development, Maritime Administration, AEC, Att.: William Hepburn
135. Division of Research and Development, AEC, ORO
136-717. Given distribution as shown in TID-4500 (14th ed.) under Reactors-Power category (75 copies – OTS)