ORNL
MASTER COPY

ORNL-2747
~~Special~~

DESCRIPTION OF THE TOWER SHIELDING REACTOR II AND PROPOSED PRELIMINARY EXPERIMENTS

L. B. Holland
C. E. Clifford

OAK RIDGE NATIONAL LABORATORY
operated by
UNION CARBIDE CORPORATION
for the
U.S. ATOMIC ENERGY COMMISSION

LEGAL NOTICE

This report was prepared as an account of Government sponsored work. Neither the United States, nor the Commission, nor any person acting on behalf of the Commission:

A. Makes any warranty or representation, expressed or implied, with respect to the accuracy, completeness, or usefulness of the information contained in this report, or that the use of any information, apparatus, method, or process disclosed in this report may not infringe privately owned rights; or

B. Assumes any liabilities with respect to the use of, or for damages resulting from the use of any information, apparatus, method, or process disclosed in this report.

As used in the above, "person acting on behalf of the Commission" includes any employee or contractor of the Commission, or employee of such contractor, to the extent that such employee or contractor of the Commission, or employee of such contractor prepares, disseminates, or provides access to, any information pursuant to his employment or contract with the Commission, or his employment with such contractor.

To: Internal Distribution, ORNL-2747

This issue of ORNL-2747 is preliminary and the information contained herein should not be released outside Oak Ridge National Laboratory until after safeguard approval for the reactor has been received. A second series of the report will then be issued on a wider distribution.

E. P. Blizard

E. P. Blizard

[illegible]

ORNL-2747

Copy 31

Contract No. W-7405-eng-26

Neutron Physics Division

DESCRIPTION OF THE TOWER SHIELDING REACTOR II AND PROPOSED PRELIMINARY EXPERIMENTS

L. B. Holland and C. E. Clifford

in collaboration with
members of the

Instrumentation and Controls Division
Engineering and Mechanical Division
Reactor Projects Division
Neutron Physics Division

Date Issued

JUL 6 1959

OAK RIDGE NATIONAL LABORATORY
Oak Ridge, Tennessee
operated by
UNION CARBIDE CORPORATION
for the
U.S. ATOMIC ENERGY COMMISSION

ABSTRACT

A new reactor, called the TSR-II, has been constructed to replace the TSR-I at the Tower Shielding Facility. The TSR-II consists of MTR-type uranium-aluminum plates shaped into a spherical fuel annulus from which a symmetrical flux is emitted. The fuel annulus contains 8.1 kg of U^{235} and is moderated and reflected by light water flowing between the fuel plates and through a spherical internal reflector region. The reactor control devices operate inside the internal reflector region and are supported by an aluminum matrix. Reactivity adjustments are accomplished by replacing aluminum plugs in the matrix with other materials. The design power for the reactor is 5 Mw, but before a safeguard report for this power can be prepared it will be necessary to perform a series of low-power (100 kw or less) experiments to establish its nuclear characteristics. This report describes the mechanical features of the reactor, the nuclear parameters that have been determined by calculations, three simulated kinetic tests used to evaluate the reactor safety, and the proposed preliminary tests.

ACKNOWLEDGEMENTS

The construction of the Tower Shielding Reactor II was made possible by the combined efforts of many individuals. The design criteria for the reactor were established from experiments performed at the Bulk Shielding Facility by K. M. Henry, E. B. Johnson, and J. D. Kington and at the Critical Experiments Facility by D. F. Cronin, J. K. Fox, and L. W. Gilley, all of the Neutron Physics Division. M. E. LaVerne, Neutron Physics Division, performed the nuclear calculations which were used to establish the reactor dimensions, and D. K. Trubey, Neutron Physics Division, and W. W. Dunn,* USAF, performed the Monte Carlo calculations to determine the gamma-ray heating in the lead shield. The mechanical design of the reactor was done by members of a design group in the Engineering and Mechanical Division, in particular by F. L. Hannon, under the supervision of C. W. Angel. An investigation of the loading on the tower structure was carried out in cooperation with John A. McCarthy of the McPherson Company, Greenville, South Carolina. The water cooling system design was coordinated in the Engineering and Mechanical Division by A. B. Fuller and in the Instrumentation and Controls Division by R. K. Adams. The reactor controls system was designed under the supervision of L. C. Oakes, and component development work for the controls was handled by J. E. Marks. The analog studies of the reactor kinetics were performed by R. K. Adams, F. P. Green, and E. R. Mann of the Instrumentation and Controls Division. The fuel element development work and fabrication were under the supervision of J. H. Erwin of the Metallurgy Division. Preliminary studies of the distribution of cooling water flow in the reactor were carried out by W. R. Gambill, H. W. Hoffman, and F. E. Lynch of the Reactor Projects Division. The final flow distribution studies, which are still underway, are being performed by J. Lewin, Engineering and Mechanical Division, and V. R. Cain, Neutron Physics Division.

This report was prepared with the assistance of L. S. Abbott, R. M. Freestone, and D. R. Ward, all of the Neutron Physics Division.

---

*On assignment to ORNL.

Table of Contents

		Page No.
	ABSTRACT	iii
	ACKNOWLEDGEMENTS	iv
	INTRODUCTION	1
I.	MECHANICAL DESIGN OF THE REACTOR	3
	Core Assembly	3
	Reactor Control Chambers	9
	Heat Removal System	9
	Reactor Suspension System	12
II.	REACTOR PHYSICS	18
	Critical Mass and Reactivity	19
	Control Rod Worth	19
	Temperature Coefficient	20
	Neutron Lifetime	21
	Void Coefficients	22
	Thermal-Neutron Flux Distribution	22
	Power Distribution and Heat Flux in the Fuel	22
	Heating in the Lead-Boral Shield	26
III.	REACTOR CONTROLS AND SAFETY SYSTEM	26
IV.	REACTOR SAFETY	40
	Analog Computer Tests	42
	Rod-Drop Test	42
	Cold-Water Slugging Test	44
	Water-Flow Stoppage Test	44
	Comparison of TSR-II to Spert I Test	49
V.	PROPOSED LOW-POWER EXPERIMENTS	49
	Reactivity Adjustments	50
	Regulating Rod Calibrations	53
	Shim-Safety Rod Calibrations and Excess Loading Measurements	53
	Measurements of Void Coefficients	54
	Measurement of Temperature Coefficient	54
	Determination of the Effect of Adding Reactor Shields	54
	Measurements of Flux Distribution and Leakage Spectra	55
VI.	OPERATING PROCEDURE	55
App.	LIST OF FIGURES	57

INTRODUCTION

Since the construction of the Tower Shielding Facility (Fig. 1) at Oak Ridge National Laboratory in 1954, a 500-kw MTR-type Tower Shielding Reactor I (TSR-I) has been used successfully for extensive nuclear experiments in which it was required that the radiation source be positioned at altitudes as high as 190 ft above the ground. In future experiments, however, it will be necessary to use a higher-powered reactor which will emit a symmetrical flux. Since neither of these requirements could be met with the original reactor, a second reactor, designated as the Tower Shielding Reactor II (TSR-II), has been constructed to replace the TSR-I.

Like the TSR-I, the TSR-II core consists of MTR-type uranium-aluminum plates cooled and moderated with light water. However, the shapes of the plates in the TSR-II are such that the assembled core is a spherical fuel annulus from which a symmetrical flux will be emitted. The control devices for the reactor are contained in the central fuel-free region inside the fuel annulus. The design power for the TSR-II is 5 Mw, ten times greater than the power of the TSR-I.

The deviations of the TSR-II from the usual pool-type design make it necessary to check out the reactor with a series of low-power experiments before a meaningful safeguard report can be prepared. From such tests the nuclear characteristics of the reactor can be determined and certain values which have been derived by calculation or by individual component testing can be confirmed. These will include a determination of the reactivity worth of the control plates and determinations of the void and temperature coefficients. Mappings of the thermal-neutron flux distribution and temperature distribution throughout the core will also be included.

All of these preliminary tests will be performed with the actual reactor in its complete and final geometry. The reactor power will be limited to 100 kw, and the total operating time at this power will not exceed 500 hr.

The tests will be performed at the TSF site, which is located on a hill about 1 mi from ORNL, 6 to 13 mi from the city of Oak Ridge, and 17 to 24 mi

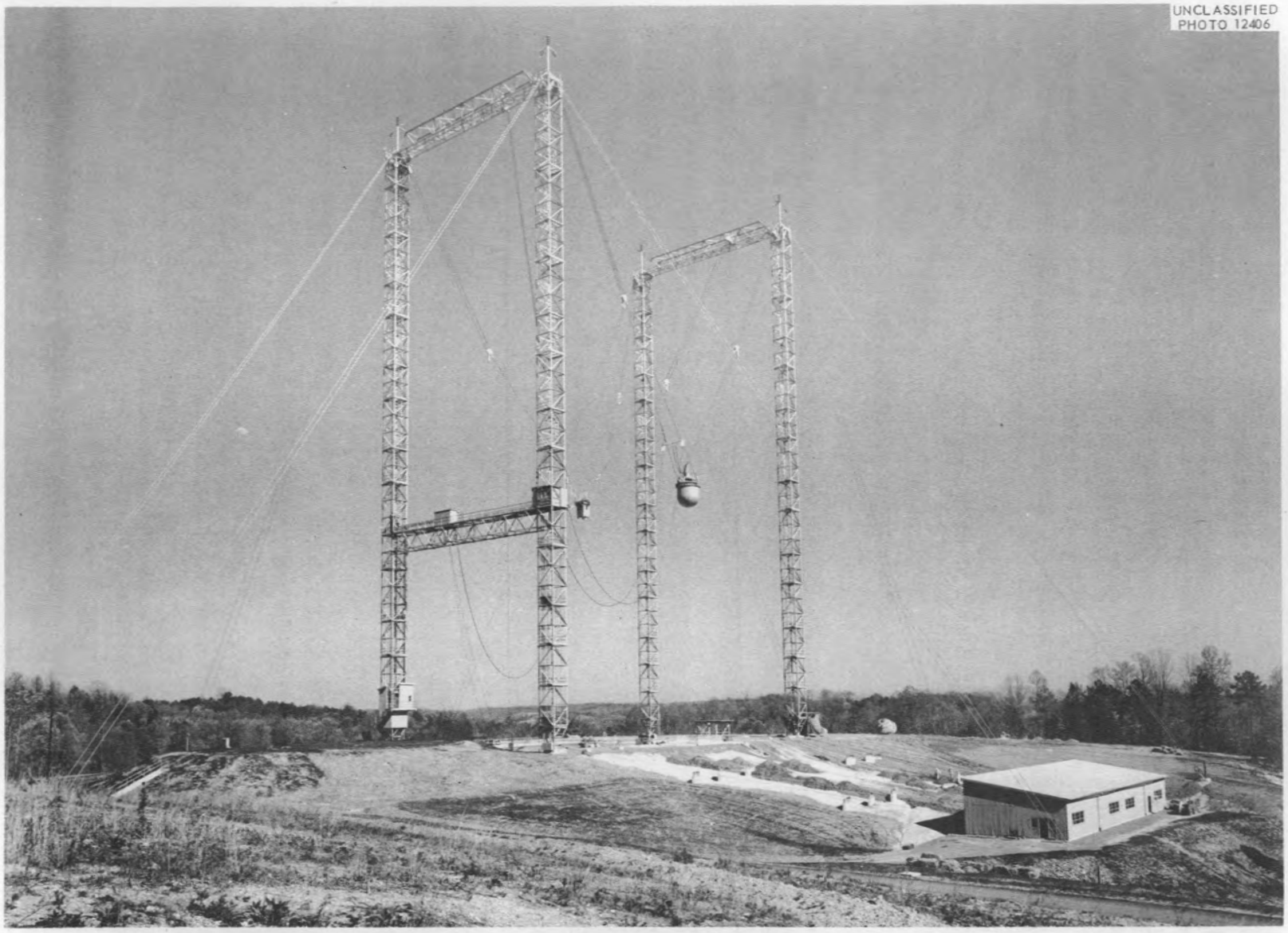

Fig. 1. The Tower Shielding Facility. The TSR-I is suspended in the round-bottom tank. The square tank houses the radiation detectors.

from the city of Knoxville (see Fig. 2). As was pointed out in the safeguard report for the TSR-I,[1] the low population density and the seismological history of the region make this a favorable location for a reactor. Since complete descriptions of the TSF geography and the climatology were included in the earlier report, they will not be repeated here.

This report includes a description of the TSR-II and its control system, a discussion of those nuclear characteristics which have been established either by computations or with some very preliminary experiments with the fuel annulus, and a discussion of the safety of the reactor as determined from a series of simulated kinetic tests. The planned low-power experiments are also described.

I. MECHANICAL DESIGN OF THE REACTOR

Core Assembly

The core assembly consists of three regions: the spherical fuel annulus; the internal reflector, including the control mechanisms and their spherical housing; and the stationary shielding around the fuel annulus. As shown in Fig. 3, all three regions are located in the lower section of a cylindrical aluminum tank with a hemispherical bottom.

The spherical fuel annulus, which is 5.5 in. thick with a 29-in. outside diameter, consists of 21 fuel elements fabricated so that the plates in adjacent elements join to form many concentric cylinders. Inside and outside views of the partially assembled core are shown in Fig. 4. As is apparent from these photographs, the spherical contour of the core was accomplished by varying the lengths of the fuel plates.

Each fuel plate consists of a sandwich of uranium-aluminum alloy clad in aluminum,* the total thickness of the plate being 0.060 in. Groups of fuel plates were welded and peened into aluminum side plates 0.120 in. apart to form elements. Three types of elements are used: annular elements, so-called because they form a cylindrical fuel annulus when assembled together; central elements, which are used in the upper and lower sections of the core; and one

*The fuel plate thickness and spacing are basically the same as those of the pool-type Bulk Shielding Reactor.

1. C. E. Clifford and L. S. Abbott, The Tower Shielding Facility Safeguard Report, ORNL-1550 (1953).

DWG. 17019

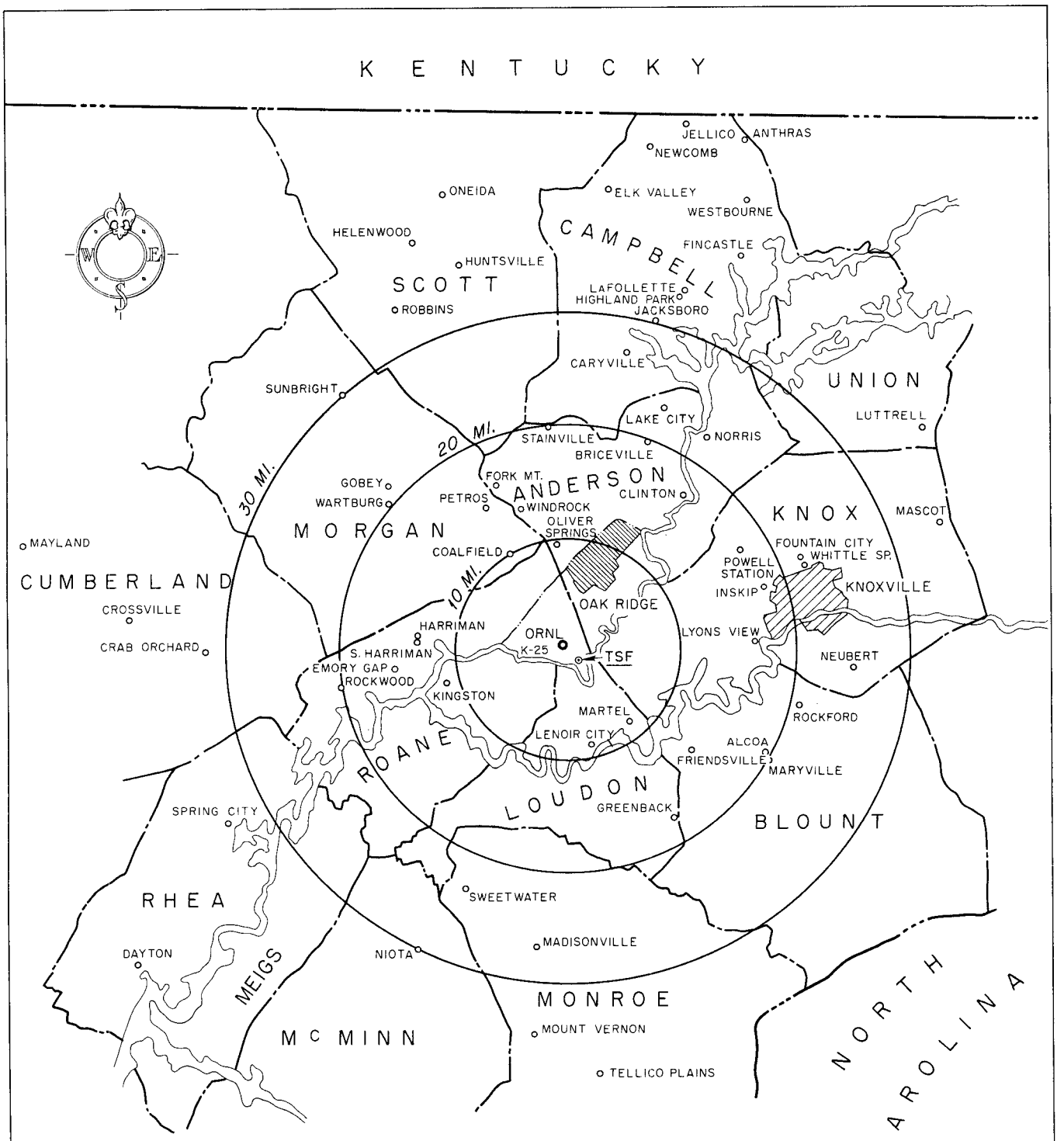

FIG. 2.

MAP OF COUNTIES

SURROUNDING OAK RIDGE AREA

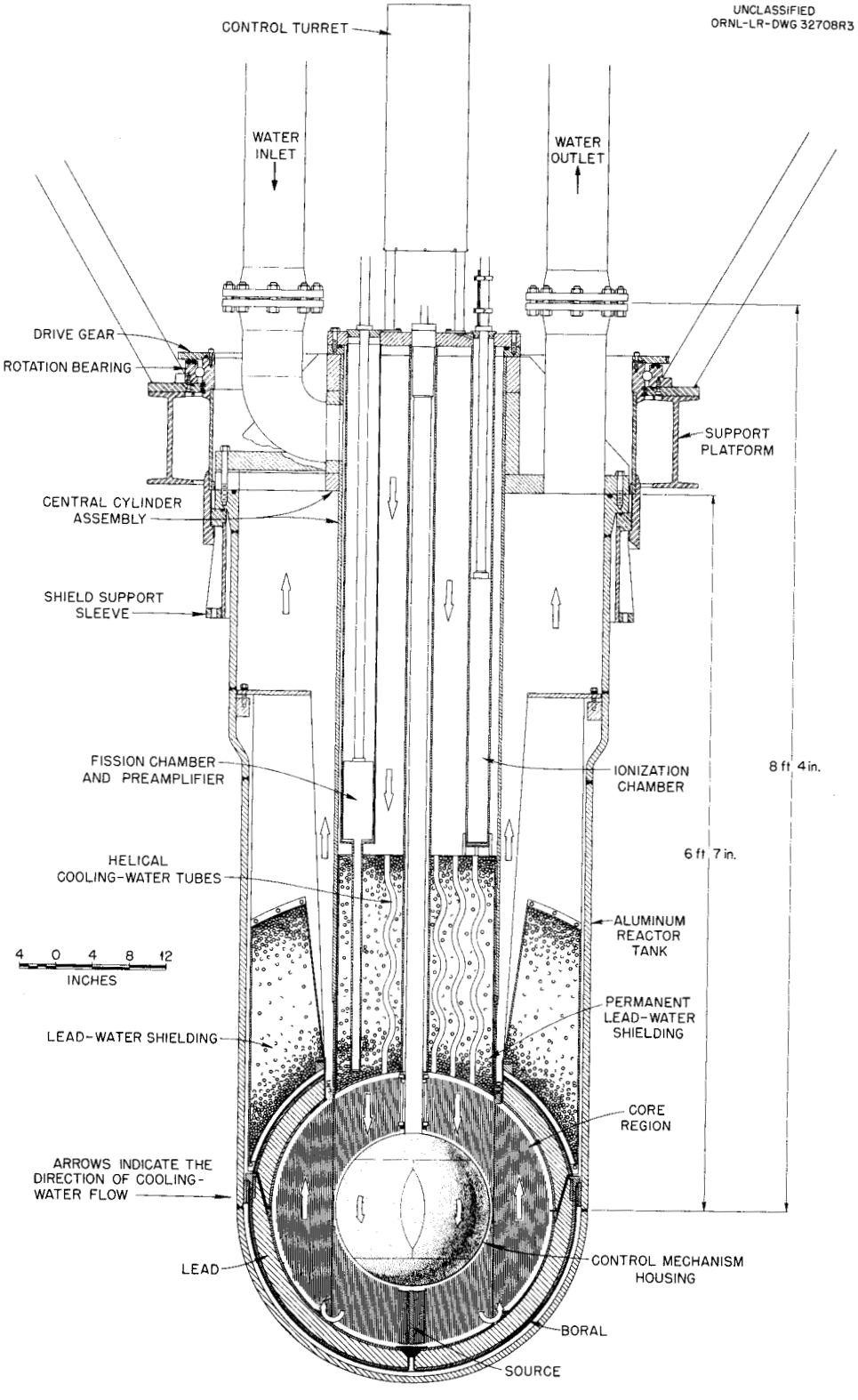

Fig. 3. TSR-II Design (Vertical Section).

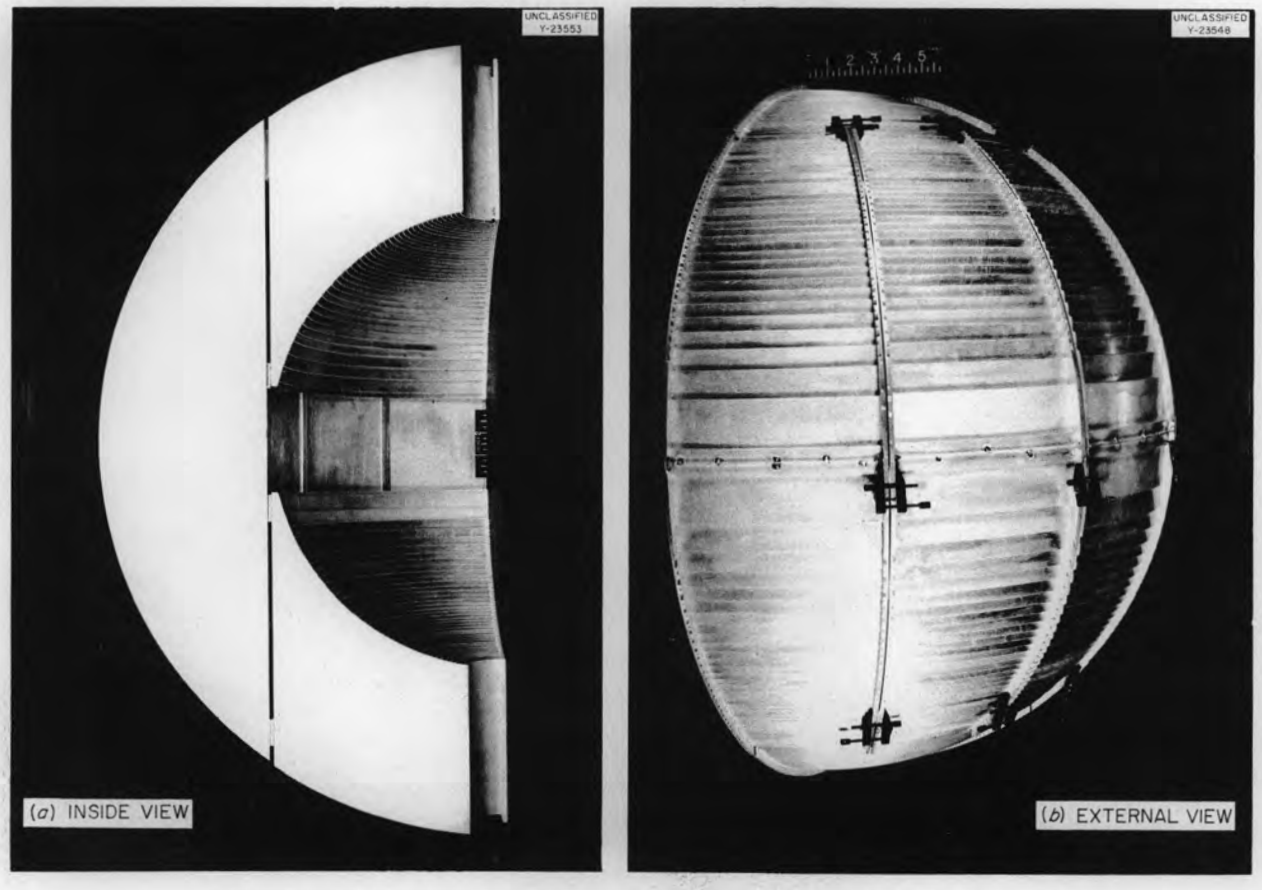

Fig. 4. TSR-II Elements Assembled in a Quarter Sphere

3-in.-dia cylindrical "plug" element which is centered in the lower central elements. The central elements, two of which are shown in Fig. 4a, are contained within a bottomless aluminum cylinder positioned inside the reactor tank, and the annular elements, shown in Fig. 4b, are held in the region between the inner cylinder and the reactor tank. There are twelve annular elements and eight central elements (four upper and four lower). The reactor source is located in the center of the plug element.

The internal reflector region is almost completely filled with a 17-in.-dia aluminum sphere which houses the reactor control rods* and the mechanisms for operating them. The completely assembled sphere is bolted to four blocks which are mounted inside the central cylinder at the horizontal reactor mid-plane. An exploded view of the close-fitting cover plates which form the outer surface of the sphere is shown in Fig. 5. The contents of the sphere are also visible in the figure. There are six control rods, each consisting

*The term "rod" is used throughout this report for all references to a neutron absorbing device since it has been almost universally used in this manner. In the case of the TSR-II, the rods are actually plates.

UNCLASSIFIED
2-01-060-75

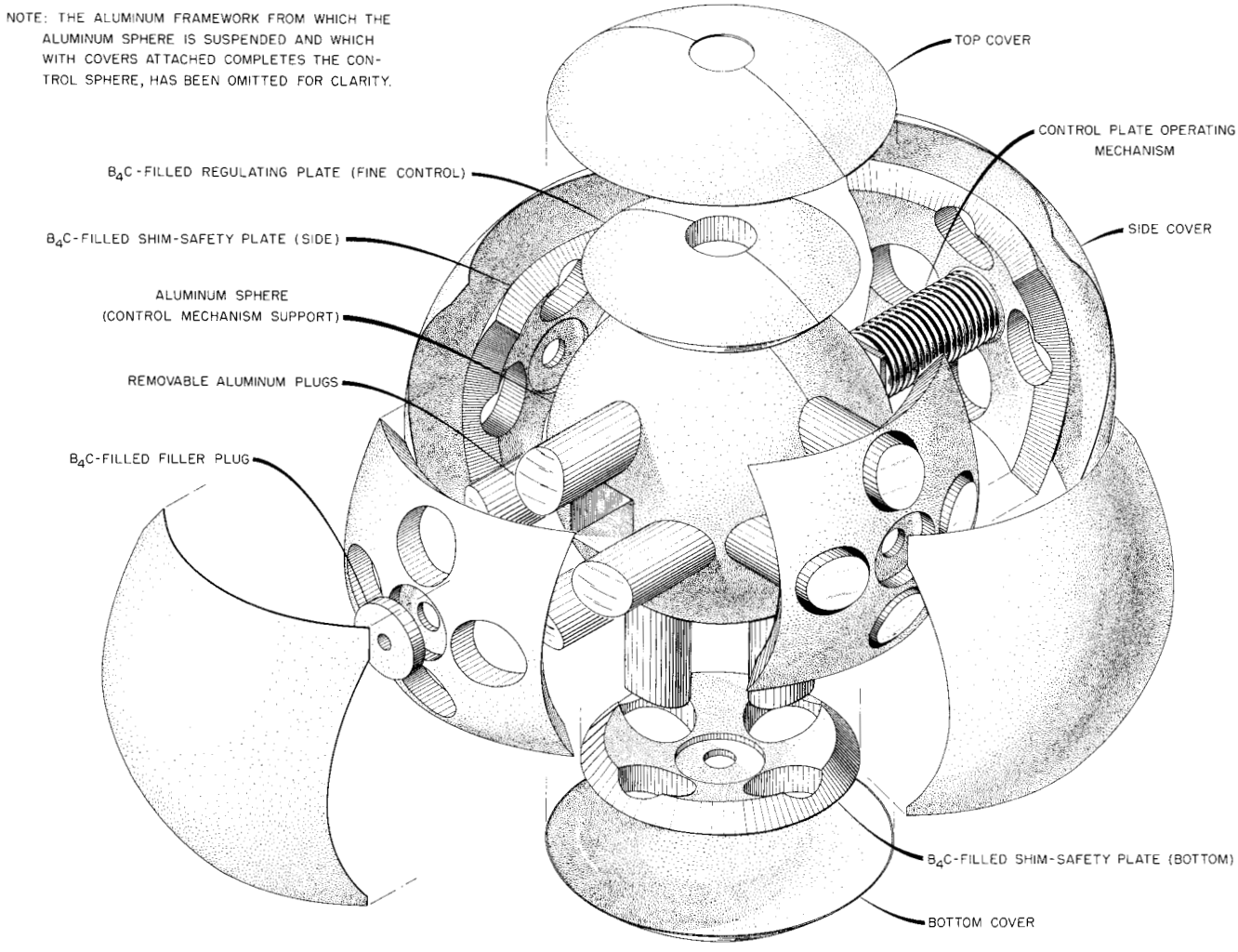

Fig. 5. TSR-II Control Mechanism and Housing.

of dished, hermetically sealed plates of stainless steel filled with boron carbide. The total thickness of each rod is 1 in., the stainless steel plates each being 1/16 in. thick. Five of these rods, four that move radially outward and one that moves downward toward the lower fuel elements, are shim-safety rods operating as a unit. Four removable aluminum plugs extend through each of these B_4C-filled plates, which are keyed so that no contact is made with the plugs during the plate traverses. (As discussed later in Sections II and IV, the plugs are incorporated in the design to allow for reactivity adjustments. They can be replaced with plugs of other materials or removed completely.) The sixth rod, which moves upward, serves as the regulating rod. All cavities within the spherical control mechanism housing are filled with water. The reactor is thus controlled by varying the thickness of water between the control rods and the inner surface of the fuel annulus. (The rod movement is achieved by a combination of mechanical and hydraulic forces as described in Section III.)

The lower central fuel elements are bolted to the internal cylinder at the horizontal reactor midplane. The upper central elements are bolted to the tube extending up from the control mechanism housing. The upper ends of the twelve annular elements are mounted on the outside of the internal cylinder by means of screw-operated wedges which expand into beveled rectangular openings. The lower ends of the annular elements fit into rectangular guides which hold the elements against the outside of the cylinder but do not restrict vertical movement caused by thermal expansion. The water layer between the spherical control mechanism housing and the inner surface of the fuel annulus is 1/4 in. thick.

Outside the fuel annulus, but separated from it by 1/2 in. of water, is a spherical shell of lead shielding 2 in. thick, followed by a 1/4-in.-thick shell of boral (aluminum-clad suspension of boron carbide in aluminum). This lead-boral region is canned in aluminum, the lead being bonded to the aluminum. Gamma-ray shielding immediately above the central fuel elements is provided by a permanent 2-ft-layer of lead shot and water contained within the inner cylinder. This shielding is penetrated by 133 helical tubes through which the cooling water enters the core. Shaped shield plugs that

can be filled with any specified material are mounted above the outer elements. Additional shielding is provided by water which floods both the inner cylinder and the reactor tank above the core. During many of the experiments in which the TSR-II will be used a specially designed shield will be mounted on the outside of the reactor tank, in which case the material in the shaped shield plugs will match the materials in the special shield.

Reactor Control Chambers

The reactor control chambers consist of one fission chamber, two compensated ionization chambers, and three uncompensated safety chambers. All are located in the central cylinder above the central fuel elements as shown in Fig. 3. The fission chamber, which is used for observing the nuclear activity during reactor startup, is initially located about 1/2 in. from the fuel region and is gradually withdrawn into a boron carbide coffin as the neutron count rate increases. The five other chambers are in stationary positions in shielded regions farther from the reactor core.

Heat Removal System

The water used for cooling and moderating the reactor enters the central cylinder near the top and follows the path shown by the arrows in Fig. 3 (p. 5). It flows downward through the 133 helical ducts in the lead-water shield, through the upper fuel elements, around the spherical control mechanism housing, and through the lower fuel elements, after which it turns and flows upward through the annular fuel elements to the region above the core, and then out of the assembly. As the water flows upward it also cools the lead-boral region since some of the flow is between the outer surface of the fuel and the inner surface of the aluminum can holding the lead and boral. A small portion of the flow is bypassed through a hole in the bottom of the lead-boral region and flows upward between the outside of the aluminum can and the reactor tank.

A general layout of the closed-circuit heat-removal system is shown in Fig. 6. The water is pumped into the central cylinder by a 60-hp pump which is capable of pumping at a rate of 200 to 1000 gpm, depending on the setting of

UNCLASSIFIED
2-01-060-70 R1

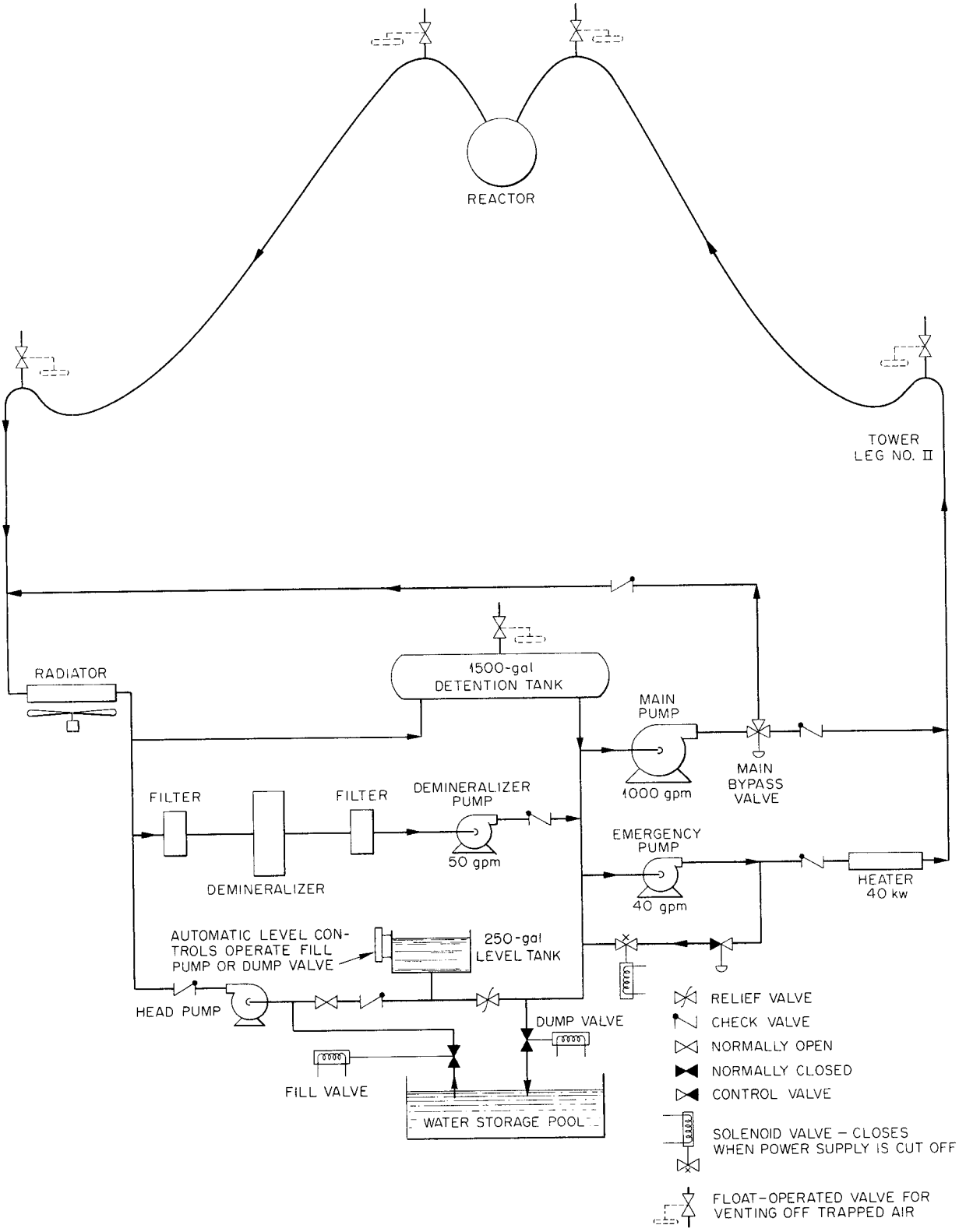

Fig. 6. TSR-II Cooling Water Flow Sheet (Functional Schematic).

a three-way bypass valve. (The lower flow rates are desirable for low-power operations.) A 5-hp battery-operated emergency pump operates parallel to the main 60-hp pump. The emergency pump runs continuously, and, in the event of an electric power failure, will pump water to the reactor at a rate of 40 gpm. By means of a bypass valve, the flow rate of the 5-hp pump can be reduced to as low as 10 gpm, which is convenient for certain special low-power runs.

When the water leaves the reactor assembly it flows to a 5-Mw forced-draft air cooler which removes the heat from the water by means of two large variable-pitch fans blowing air across aluminum tube-and-fin radiators. The pitch of the fans and the position of the radiator louvres are controlled thermostatically so as to maintain a fixed temperature for the water leaving the cooler.

Most of the water from the heat exchanger flows to a 1500-gal aluminum detention tank and eventually returns to the reactor. However, 50 gpm of the cooled water is diverted to a plastic-lined mixed-bed demineralizer which removes both anions and cations. The water that leaves the demineralizer is then pumped back into the main system with a 5-hp demineralizer pump. This pump may also be used to circulate water from the pool through the demineralizer when the reactor is not being used.

When the electrical conductivity of the water leaving the demineralizer rises to a predetermined value, the unit shuts off and a signal light indicates the need for regeneration of the bed. The water flushed through the demineralizer for this purpose is retained in a 5000-gal holdup tank until its radioactivity is reduced sufficiently for it to be disposed of.

A special water circuit feeds a small portion of the water from the heat exchanger through a fission break monitor.* This instrument monitors a part of the gamma-ray spectrum of the water and will annunciate the presence of iodine, which indicates that fission products are present in the coolant. In the event that this occurs, the reactor will be shut down.

---

*Victoreen Model No. 900-69.

The pressure in the heat removal system is maintained by a head pump which during operation maintains a low flow through the detention tank and a constant pressure valve. A 250-gal water level tank which is open to the atmosphere is connected to the above loop between a check valve and the constant pressure valve. The water level in this tank is maintained automatically by level switches which open either a drain valve to the storage pool or a fill valve. The water level in the pool is higher than it is in the level tank.

The water flowing from the detention tank to the reactor is first pumped to the 120-ft level of tower leg No. 2 through a 6-in. schedule 40 aluminum pipe (see Fig. 7). A 6-in. neoprene hose then carries it to a sling bar above the reactor. (In addition to its own internal steel wire support, the neoprene hose is supported by a 1/2-in. messenger cable.) Another 33-ft section of 6-in. neoprene hose carries the water from the sling bar down to the reactor. Swivel fittings at the 120-ft level on the tower leg and also at the sling bar permit the various hose movements needed as the reactor is hoisted. Similar hoses, swivels, and pipes carry the water from the reactor to tower leg No. 1 and back down to ground level.

All of the major components of the heat removal system, e.g., the demineralizer, radiators, filters, pumps, and valves, are located in small buildings which are equipped with automatic electric space heaters to prevent freezing. As mentioned above, the emergency pump runs continuously and an automatic 40-kw water heater in this circuit provides heat for the water as required.

Reactor Suspension System

As explained above, the core assembly is mounted within a cylindrical aluminum tank with a hemispherical bottom. This tank, which was fabricated from 3/4-in.-thick type 5052 aluminum, is 8 ft long. It has a 37-in. inside diameter at the hemispherical end and a 40-in. inside diameter at the open end. The larger diameter near the top is to facilitate removal of the shielding, fuel elements, etc. from the tank. The tank was designed, fabricated, inspected, and tested in accordance with the latest published ASME

UNCLASSIFIED
2-01-060-76

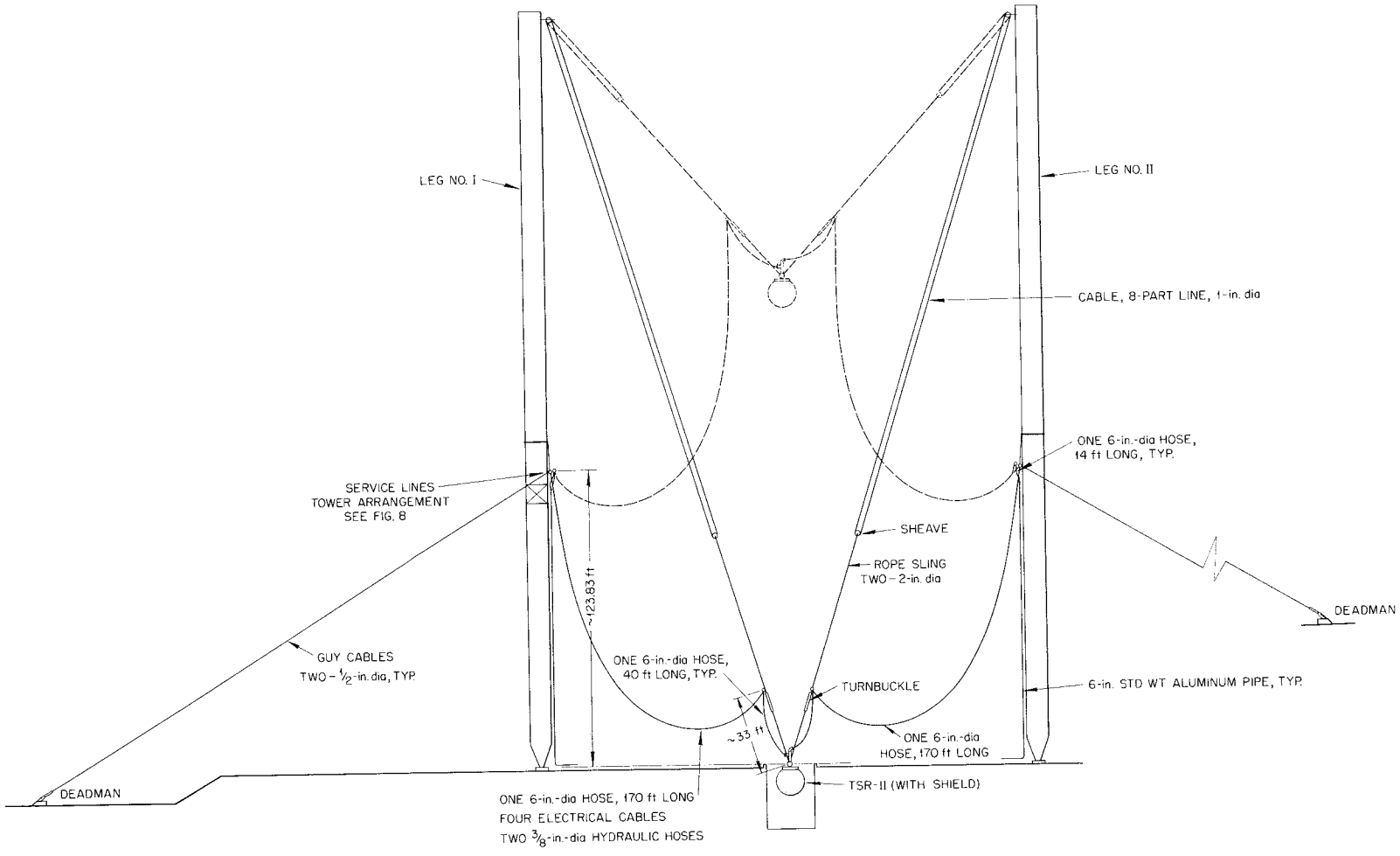

Fig. 7. Over-all Suspension Arrangement of TSR-II Cooling Water Hoses and Electrical Cables.

code for unfired pressure vessels[2] and deviates from it only in that the yield strength of the aluminum in the hemispherical head is 89,000 to 91,000 psi instead of the specified 95,000 psi. The hemisphere will still withstand the design pressure of 150 psi at 180°F with a safety factor of 4.

For most in-air operations the reactor will be suspended from the support platform shown in Fig. 8. This platform is, in turn, suspended by shackles from the hoist cables of tower legs Nos. 1 and 2. In the center of the platform is a 4-ft-dia ball bearing, the outer race of which is anchored to the platform. The reactor (and also its shield if one is used) is supported from the inner race. This permits the reactor to be rotated around its vertical axis for certain experiments. (In Fig. 8 the reactor is encased in a "beam" shield. In experiments in which this shield is used a beam from the reactor will sweep a horizontal plane.) The inner bearing race extension, shield support collar, and reactor support rim are equipped with a series of discontinuous interlocking ledges. This bayonet-lock arrangement permits the support platform to be used for lifting the reactor alone or the reactor and shield together as a unit, the mode of lifting depending on the angular position of the inner bearing race.

A second type of support will be used for some in-air operations in which a beam from the reactor will sweep a vertical plane. In this case the reactor will be firmly clamped inside a shield, and the shield will be supported by two girder-like members as shown in Fig. 9. The reactor cooling water will enter and leave the shield through swivel joints at the large hollow bearings.

The suspension of the TSR-II and its accessory equipment from the tower legs will result in greater stresses in the tower structure than the TSR-I and its equipment have caused. Specifically, the 6-in. reactor water hoses attached to the 120-ft level sling boxes on tower legs Nos. 1 and 2, and also the additional electrical cables attached to these boxes, will add loads to these two legs. In order to avoid excessive side loads, guy lines leading from these junctions have been attached to the tower dead men, thus cancelling out practically all of the horizontal forces (see Fig. 10). Since these

2. ASME Boiler and Pressure Vessel Code: Section VIII. Unfired Pressure Vessels, Part UNF, Revised 1956.

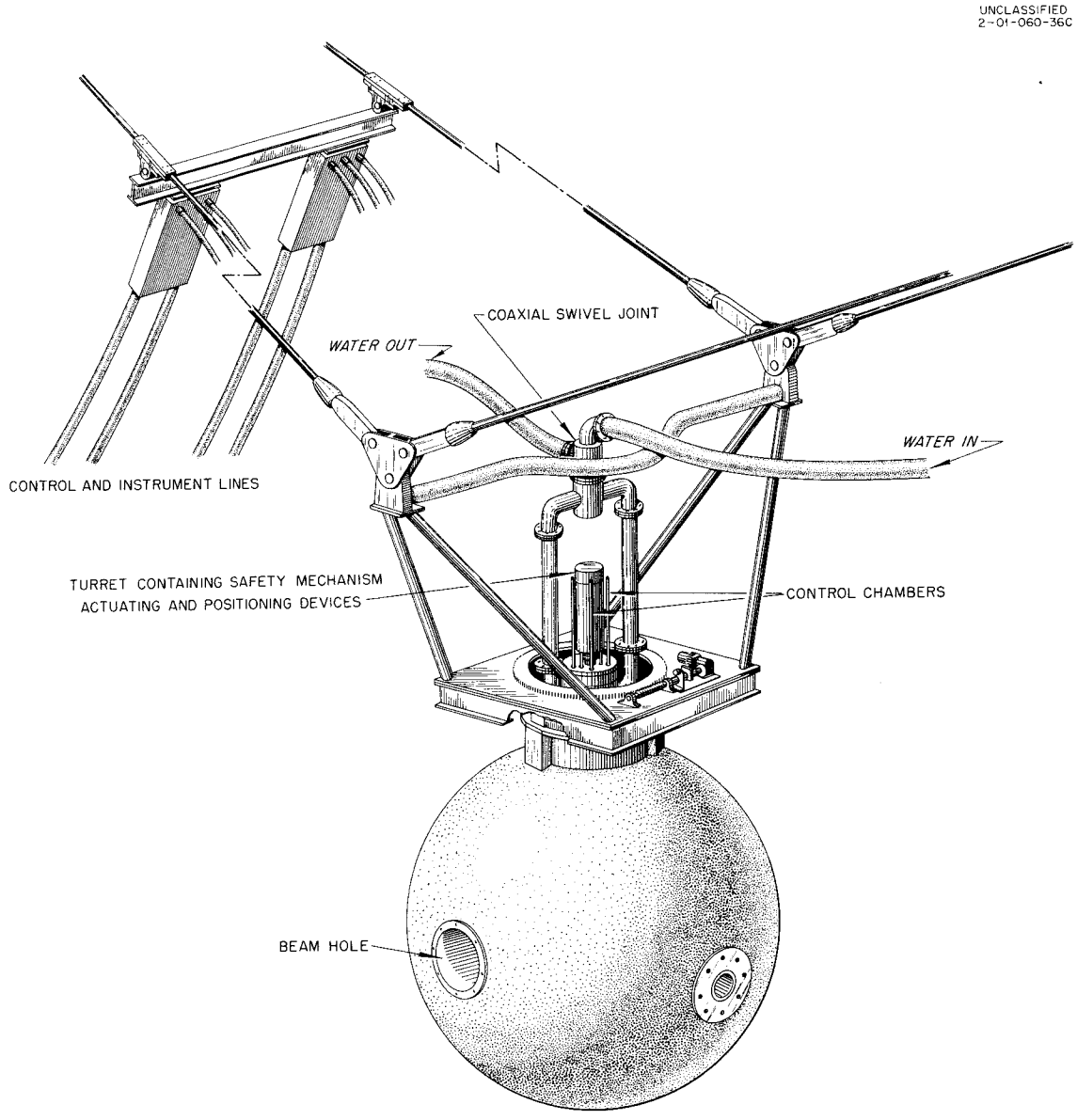

Fig. 8. Reactor Platform Suspension Arrangement (TSR-II in Beam Shield).

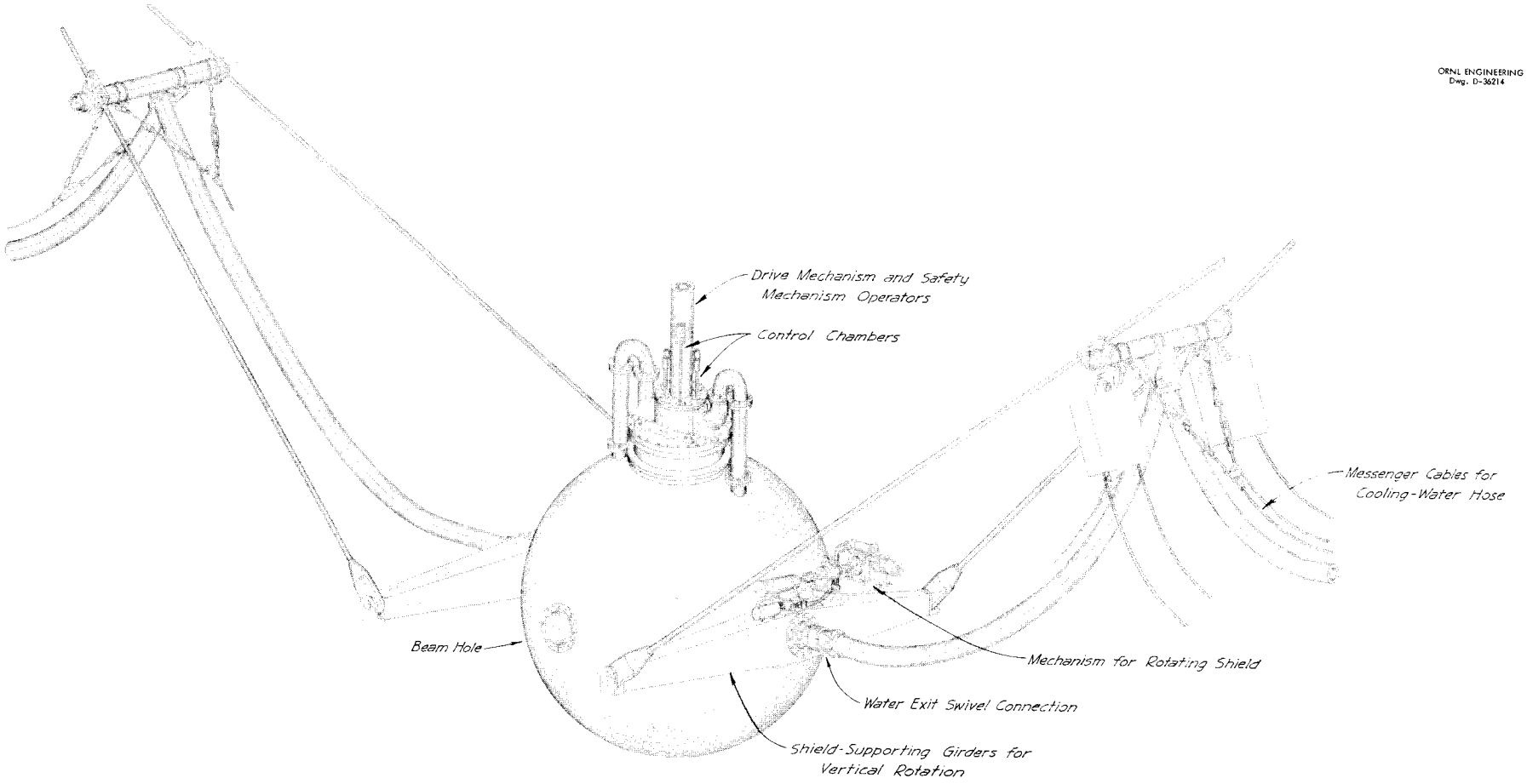

Fig. 9. Suspension Arrangement for Vertical Scanning.

UNCLASSIFIED
2-01-060-56

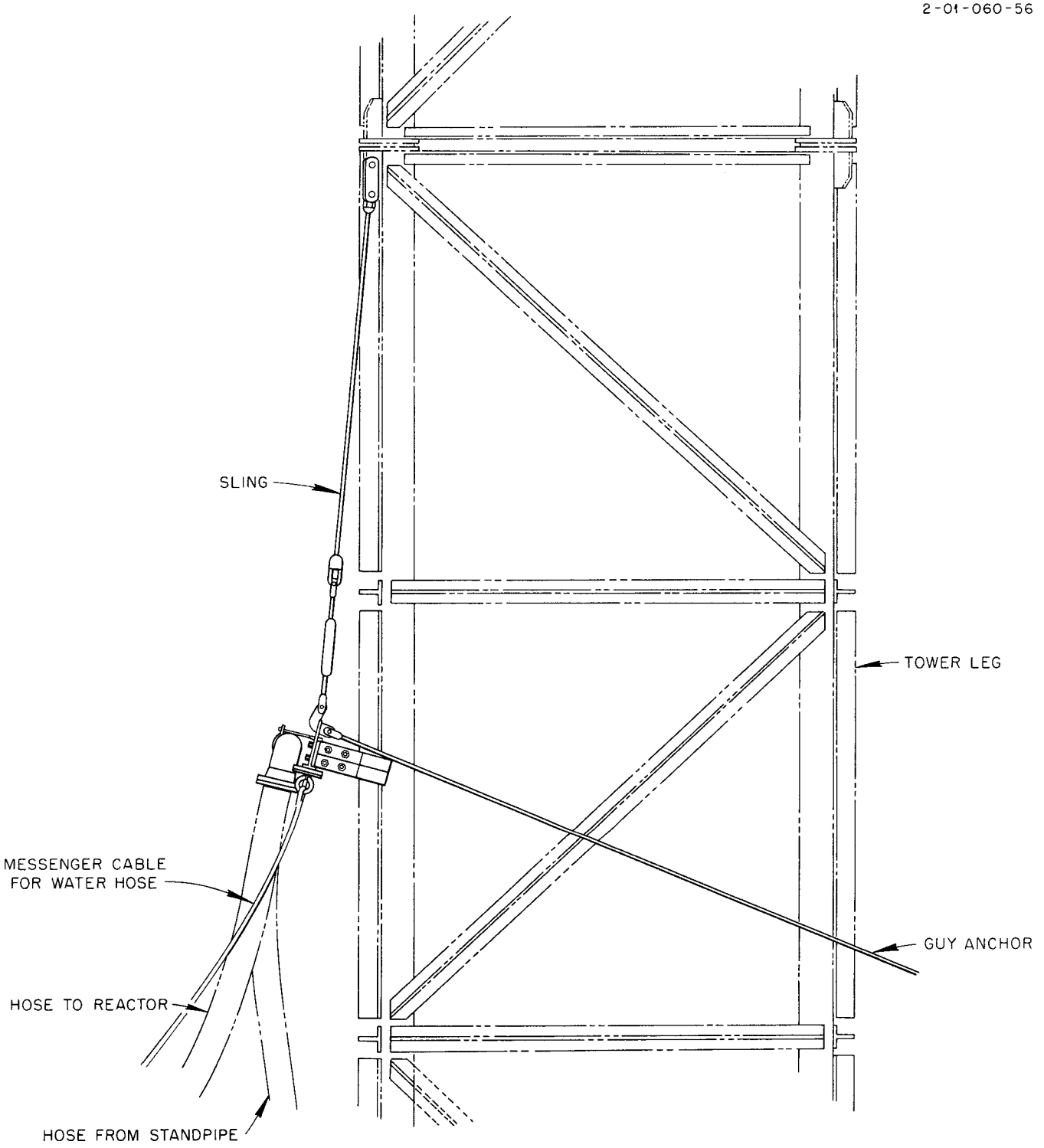

Fig. 10. Tower Suspension Arrangement of Reactor Cooling Water Lines.

additional hoses and cables also cause a greater vertical load, a new analysis* was undertaken to determine the stresses in the tower structure under maximum loading conditions, which were assumed to be as follows:

(1) Reactor assembly weight = 55 tons.

(2) Instrument compartment weight = 30 tons.

(3) Wind velocity = 80 mph.**

(4) Weight of two water hoses = 25 lb/ft (each hose is 170 ft long).

(5) Weight of four electrical cables = 2.75 lb/ft (each cable is 170 ft long).

The results of this investigation showed that the stresses in the tower structure would be within the maximum allowed.

II. REACTOR PHYSICS

Many of the nuclear characteristics of the TSR-II have been determined from a series of calculations performed concurrently with the mechanical design. The validity of the critical mass calculation for the completely water-reflected TSR-II fuel annulus was later verified by a preliminary experiment performed at the ORNL Critical Experiments Facility. A second preliminary experiment with the completely water-reflected fuel annulus to investigate the temperature coefficient of reactivity demonstrated the necessity for performing full-geometry low-power experiments (see Section IV) to firmly establish all the nuclear characteristics of the reactor. This section is devoted to a discussion of the calculated parameters with references to the results of the preliminary experiments. The calculations were performed on the Oracle computer with either the Corn Pone Code[3] or with the Cornwash Code (modification of the Corn Pone Code in which the Goertzel-Selengut approximation and cross sections from the Eyewash Code[4] are used). (An exception to this is the calculation of the heating in

*By John A. McCarthy, McPherson Co., Greeneville, South Carolina, and F. L. Hannon, ORNL.

**Operating procedures require that the reactor be lowered and stored when the wind is expected to reach 40 mph.

3. The Corn Pone (consistent P-1) Code has been described by W. E. Kinney et al. in ORNL-2081, Appl. Nuclear Phys. Ann. Rep. Sept. 10, 1956, p. 133; in ORNL-2389, Appl. Nuclear Phys. Ann. Rep. Sept. 1, 1957, p. 145; and in ORNL-2609, Neutron Phys. Ann. Rep. Sept. 1, 1958, p. 84.

4. J. D. Alexander and N. D. Given, A Machine Multigroup Calculation: The Eyewash Program for Univac, ORNL-1925 (1955).

the lead-boral region, which was determined by an Oracle Monte Carlo calculation.) Except where noted otherwise, the information presented is for the case in which a 20-cm-thick light-water shield-reflector surrounds the control rod-fuel-lead-boral assembly.

Critical Mass and Reactivity

The TSR-II fuel elements contain a total of 8.1 kg of U^{235}. Both the calculations and a preliminary experiment have shown that when the assembled fuel elements are completely water reflected, both internally and externally, with water at 70°F, they are slightly subcritical even in the absence of the control rods. Since the design of the fuel annulus will make it impossible to increase the reactivity by adding elements, reactivity is added to the assembly by displacing the water in the internal reflector region with the spherical aluminum housing for the control mechanism. The control rods operate within water-filled pockets inside the housing. The volume not required for the control mechanism is filled with aluminum in which plugs of various materials, such as boron carbide or air, can be inserted to adjust the reactivity (see Fig. 5). For the proposed low-power experiments the reactivity will be adjusted to a 0.7% $\Delta k/k$ excess. This should be sufficient since there will be no appreciable burnup of fuel or buildup of xenon during the experiments. This amount of reactivity will also be sufficient to permit a measurement of the temperature coefficient at powers up to 100 kw.

Control Rod Worth

As discussed in Section I, the TSR-II is controlled by six radially operated control rods: five shim-safety rods and a regulating rod. Each shim-safety rod is worth 0.32% $\Delta k/k$ in its fully withdrawn position and 0.83% $\Delta k/k$ in its most effective position. Inserting all five shim-safety rods should, therefore, effect a 2.55% reduction in reactivity. Figure 11 shows that the reactivity change is nearly linear over the operating range. The effect of the regulating rod, which will operate independently and will not scram, will be comparable to the effect of a shim-safety rod.

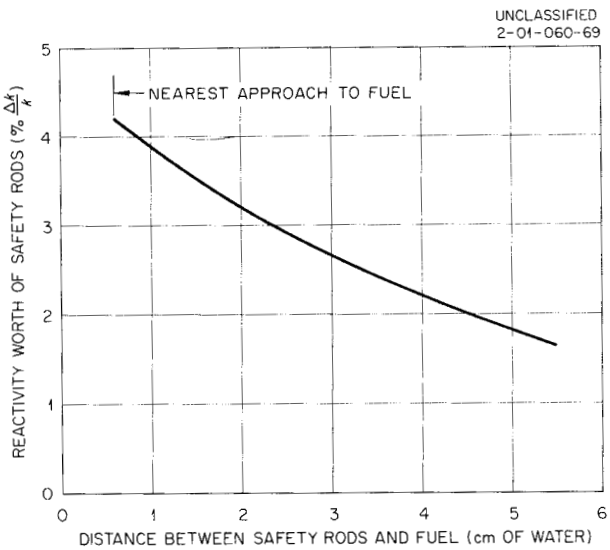

Fig. 11. Reactivity Worth of the TSR-II Safety Rods as a Function of their Distance from the Fuel Region.

Temperature Coefficient

The results of a calculation of the reactivity of the completely water-reflected TSR-II fuel annulus as a function of the bulk water temperature are compared with the values from a preliminary experiment in Fig. 12. (To make the fuel annulus critical for this experiment the separation distance between the upper and lower fuel elements was decreased by 0.5 in.) The calculated reactivity change as a function of bulk water temperature for the full-core geometry (that is, the complete core assembly with the control mechanism housing and lead-boral shield) is also shown. If the actual reactivity for the full-core geometry follows that for the experimental water-reflected case, no excess

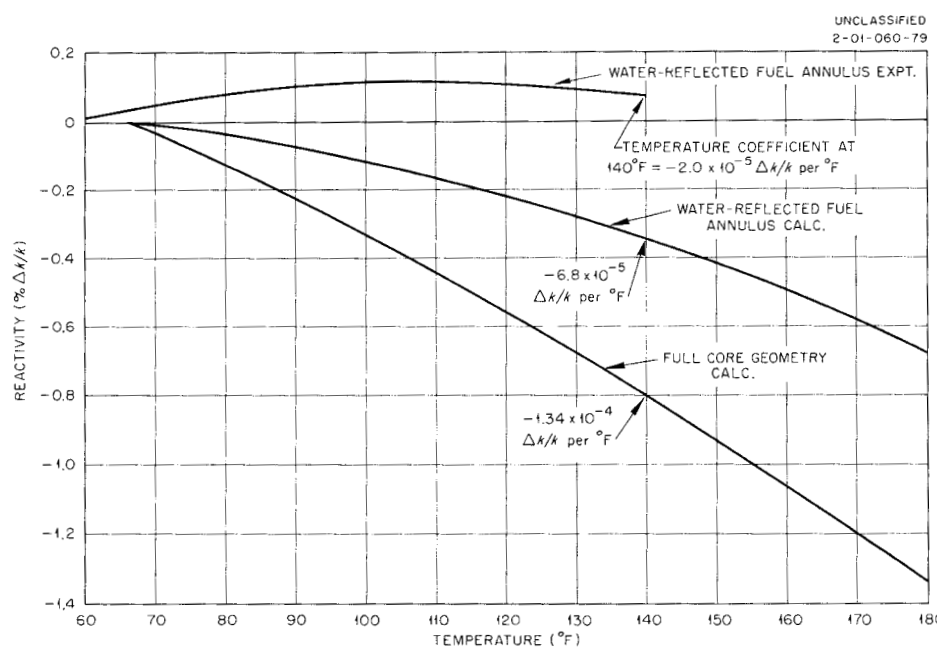

Fig. 12. Reactivity of the TSR-II Fuel Annulus with Different Reflector Materials as a Function of Bulk Water Temperature (Calculation and Experiment)

loading will be required for higher temperatures even though the reactor will be protected by a negative temperature coefficient at the proposed mean operating temperature of 137°F. It is apparent from examination of these curves, however, that the temperature coefficient of reactivity should be measured with the completely assembled reactor before any attempt is made to specify the amount of reactivity required for 5-Mw operation. A temperature coefficient calculated for a rapid rise in fuel plate temperature before a significant amount of heat can be transferred to the water was -4.8×10^{-6} $\Delta k/k$ per °F.

Since the calculated temperature coefficient is not in agreement with the experimental measurement for the single case investigated, it is assumed that the calculation for the complete reactor is also in error in magnitude but correct in trend. On the basis of this reasoning, the two negative temperature coefficients chosen for the simulated kinetic studies presented in Section IV (-4.28×10^{-5} $\Delta k/k$ per °F and -6.5×10^{-5} $\Delta k/k$ per °F) were both larger than the experimentally observed temperature coefficient. If the measured coefficient for the full-geometry case differs from these values significantly, the simulated kinetic tests will be rerun.

Neutron Lifetime

The prompt thermal-neutron lifetime in the TSR-II core is 40 μsec. Assuming a 10-μsec slowing-down time results in a neutron generation time of 50 μsec. This is a conservative figure because no correction was made for the additional time spent by neutrons diffusing in the internal aluminum or the external lead.

Void Coefficients

Void coefficients for the core were computed from changes in the multiplication constant produced by deleting the water (but not the aluminum or uranium) from thin spherical shells of the core. The results, in $\Delta k/k$ per cubic centimeter of a void, are shown as a function of the radial position in the core in Fig. 13. The volume-averaged mean void coefficient is -2.15×10^{-6} $\Delta k/k$ per cubic centimeter of void in the core.

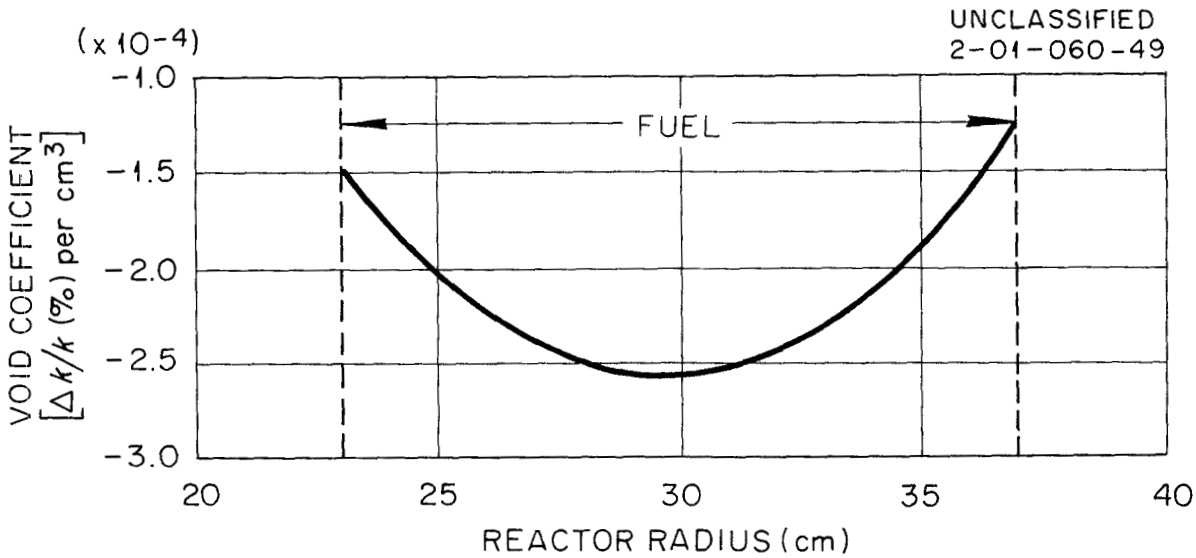

Fig. 13. Core Void Coefficient as a Function of Reactor Radius.

Thermal-Neutron Flux Distribution

The neutron flux distributions in the core were calculated on the Oracle computing machine with the Cornwash code for 30 fast groups, one epithermal group, and one thermal group. The resulting thermal-neutron flux distribution for a 5-Mw operation is shown in Fig. 14. For this calculation it was assumed that the control device was a spherical boral shell positioned 4 cm from the inner surface of the fuel annulus. The calculations indicate that the thermal-neutron distribution in the core will be affected only slightly when the external shield and internal reflector are changed.

Power Distribution and Heat Flux in the Fuel

The results of a Cornwash calculation of the distribution of neutrons born in the core during a 5-Mw operation are shown as a function of the distance from the center of the reactor in Fig. 15. Again the control device was assumed to be a spherical boral shell positioned 4 cm from the inner surface of the fuel annulus. From this neutron distribution the power distribution for each fuel plate was determined. Results for several plates in a central fuel element are shown in Fig. 16, and results for plates in an annular fuel element are shown

UNCLASSIFIED
2-01-060-45

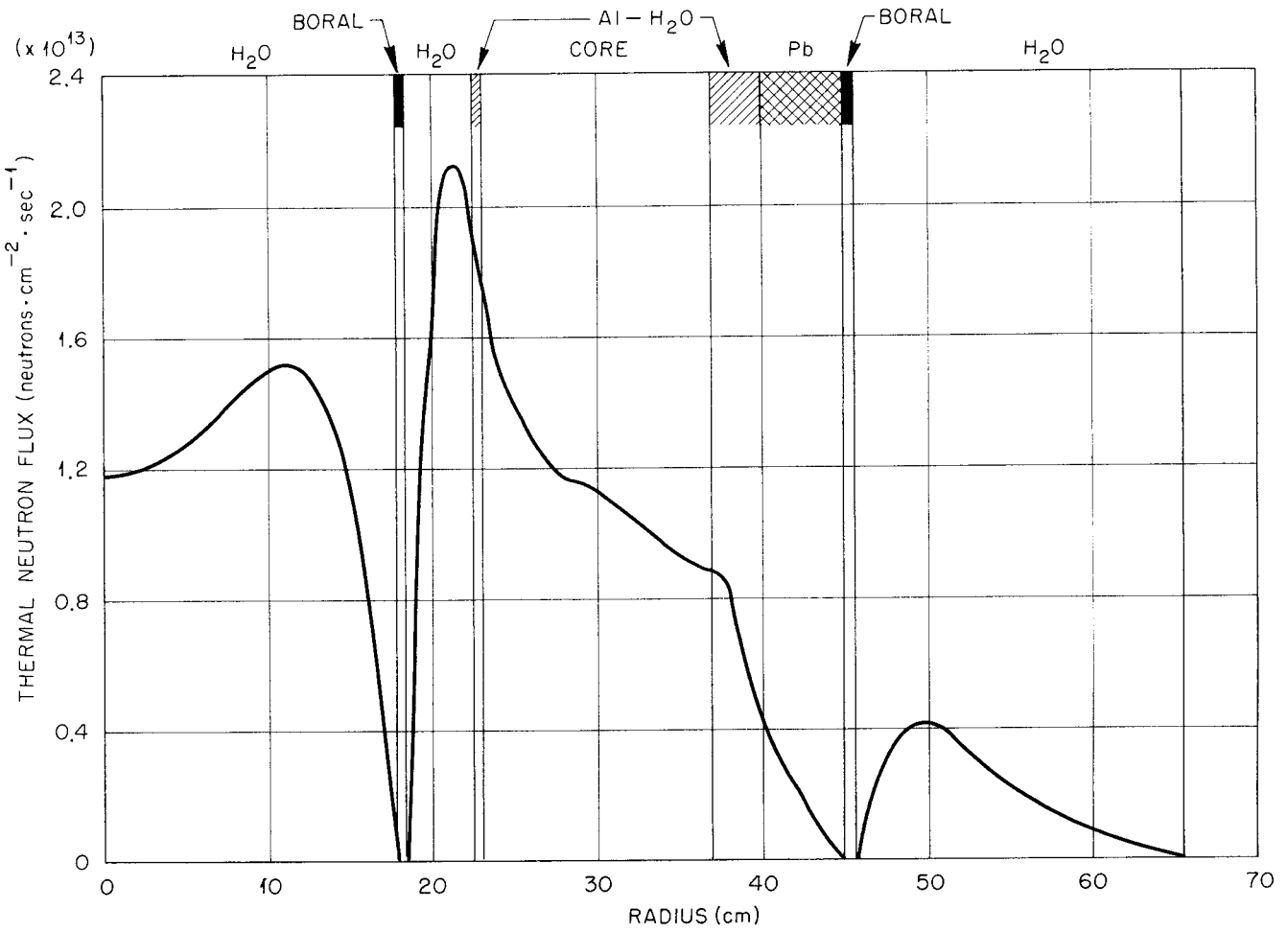

Fig. 14. Thermal-Neutron Flux in the TSR II as a Function of Radius, at 5 Mw Power Level.

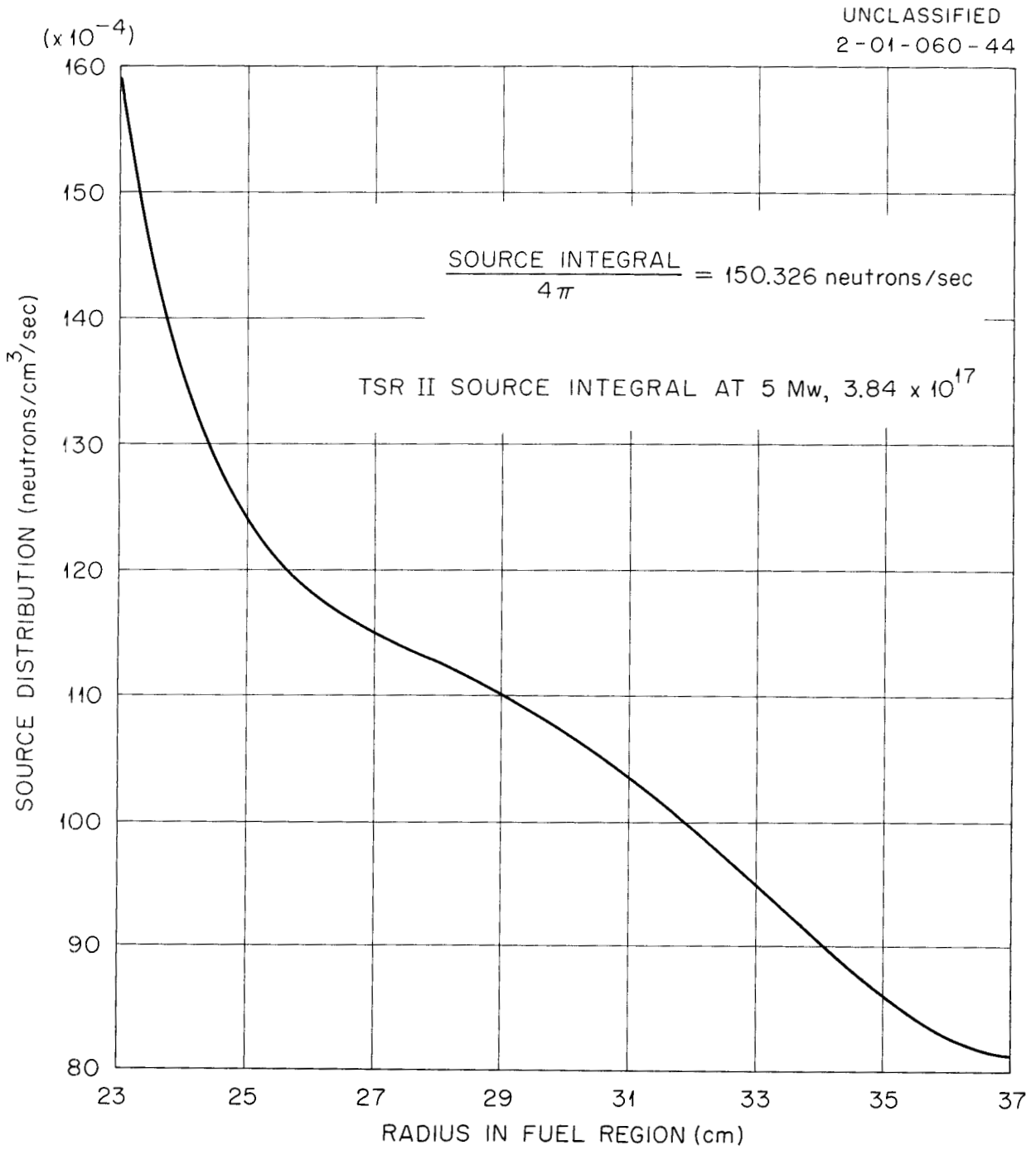

Fig. 15. Source Distribution in the TSR-II Fuel Region as a Function of Radius: Boral Shell 4 cm from the Fuel.

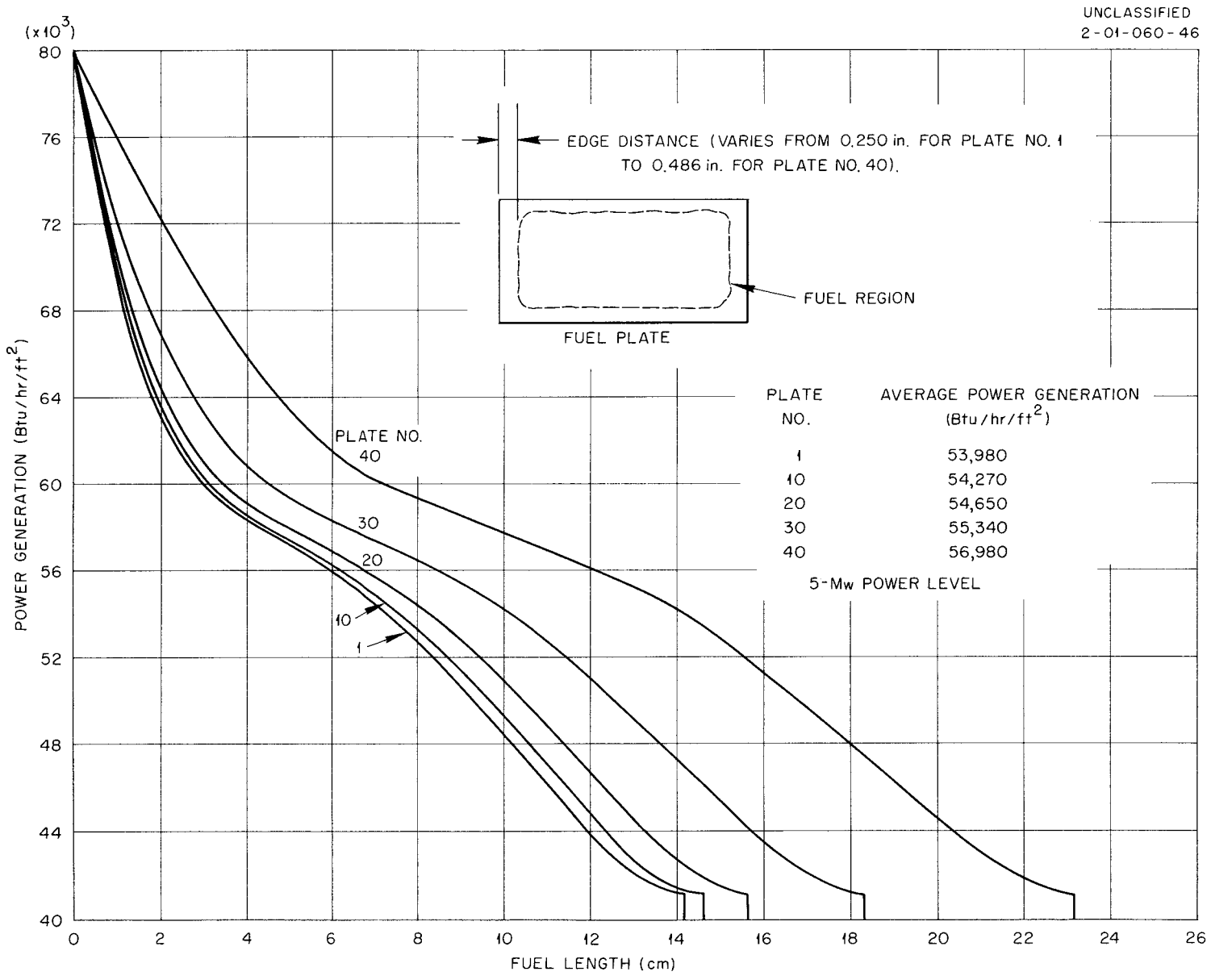

Fig. 16. Power Generation in Fuel Plates of a Central TSR II Fuel Element as a Function of the Distance from the Inside Edge of the Fuel.

in Fig. 17. An integration over each fuel plate gave the total power generated in the fuel plate. The total power generated in each fuel plate of a central element is shown in Fig. 18 and that in each plate of an annular element in Fig. 19. The maximum heat flux at 5 Mw is 41,200 $Btu \cdot hr^{-1} \cdot ft^{-2}$, and the average heat flux is 26,000 $Btu \cdot hr^{-1} \cdot ft^{-2}$. (Since heat is removed from both sides of each fuel plate, the numerical value of the heat flux at a point is just one-half the value of the power generation.)

Heating in the Lead-Boral Shield

The gamma-ray heating in the 2-in.-thick lead shield outside the core region was computed in two steps. A hand calculation of the gamma-ray heating at the core-shield interface was first performed. Then the heating as a function of depth in the lead was determined by Monte Carlo techniques. The results are shown in the histogram of Fig. 20.* A later Monte Carlo calculation has shown the initial values of heating at the core-shield interface to be too high by a factor of 2. The conservative value was used and no attempt was made to estimate neutron heating. The total gamma-ray heating in the lead was calculated to be 114 kw at 5 Mw.

The heating due to neutron absorption in the boral was calculated to be 26.5 kw at 5 Mw.

III. REACTOR CONTROLS AND SAFETY SYSTEM

The reactor controls and safety system for the TSR-II was designed in accordance with the same basic philosophy used for other solid-fuel water-moderated research reactors constructed at ORNL. There are, of course, many instrumentation problems peculiar to a reactor that is to be suspended in air, but since most of these were described in the safeguard report for the TSR-I (Ref. 1) they will not be repeated here. There are some additional problems which are unique to the TSR-II, however. For example, it was required that the control and safety system be designed so that it will operate whether the reactor is in a vertical position or a horizontal position. It was also required that the perturbation of the flux in the reactor by the control rods be as spherically symmetric as possible in order to insure the emission of a symmetrical flux from the surface of the reactor.

*This analysis was performed when the design of the lead region called for two layers of lead separated by a water layer. The heating in the solid lead layer would be approximately the same, however.

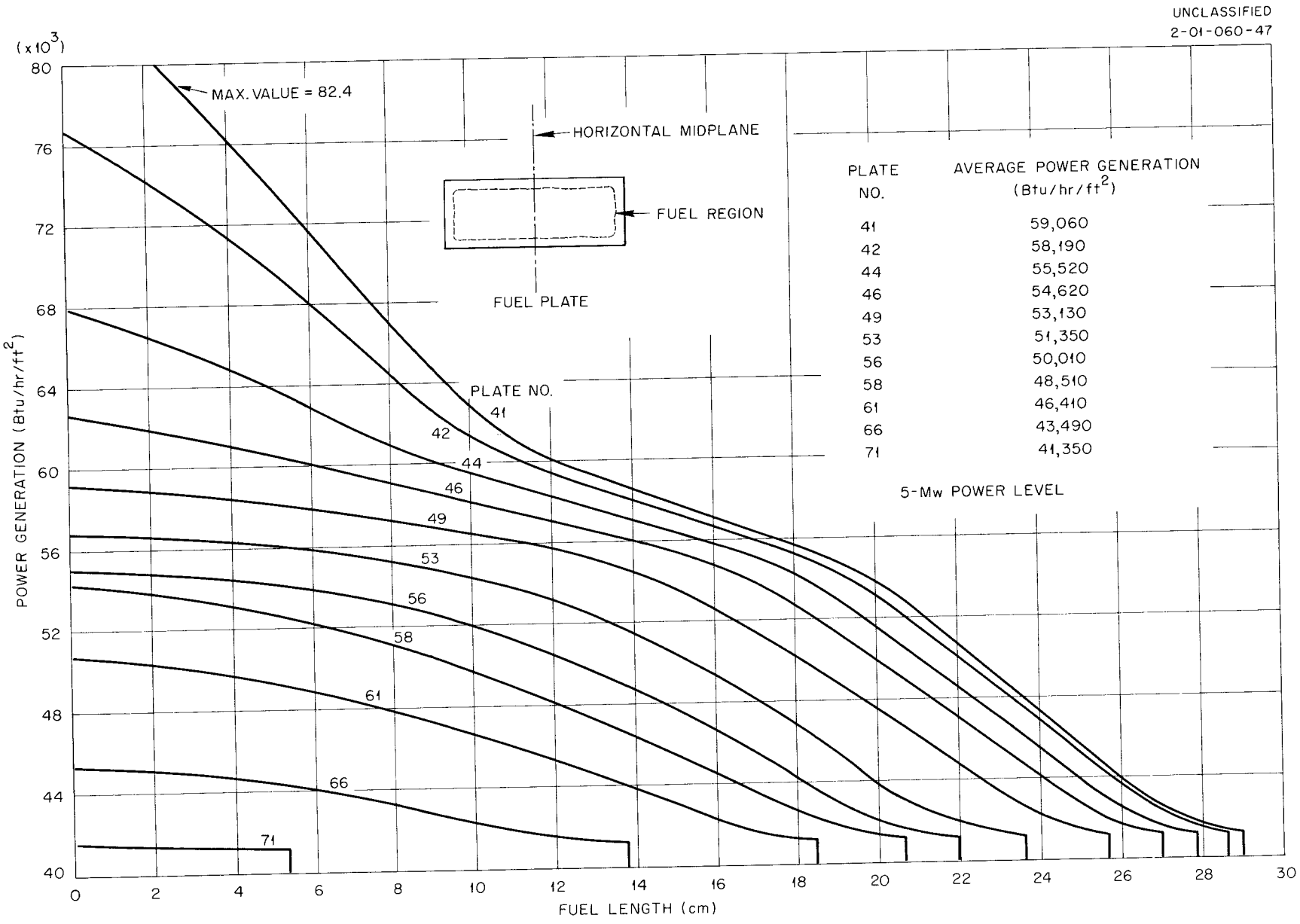

Fig. 17. Power Generation in Fuel Plates of an Annular TSR II FUEL Element as a Function of the Distance from the Horizontal Midplane to the Edge of the Fuel.

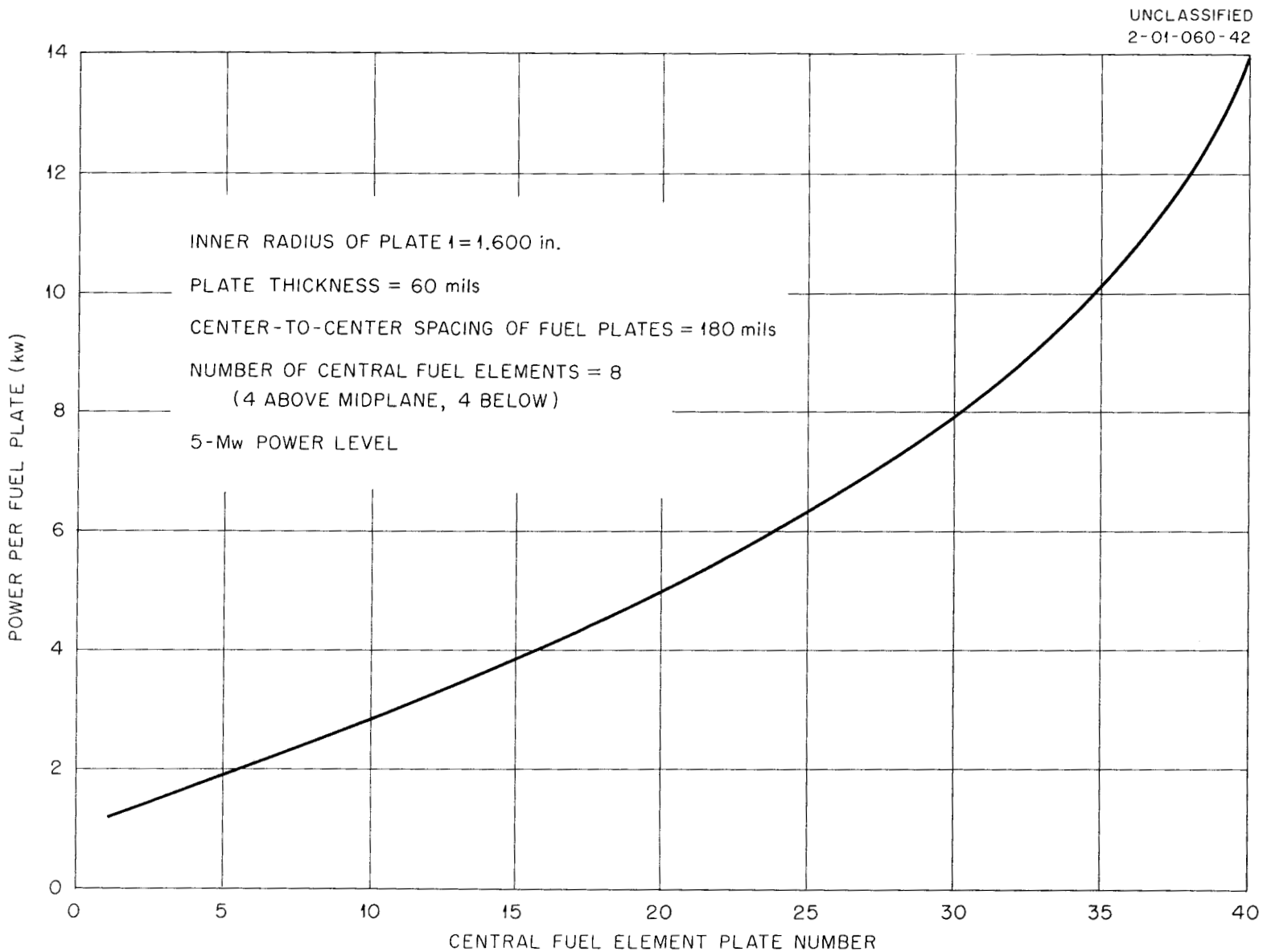

Fig. 18. Power Generated in Each Fuel Plate of a Central Fuel Element of the TSR II as a Function of Plate No.

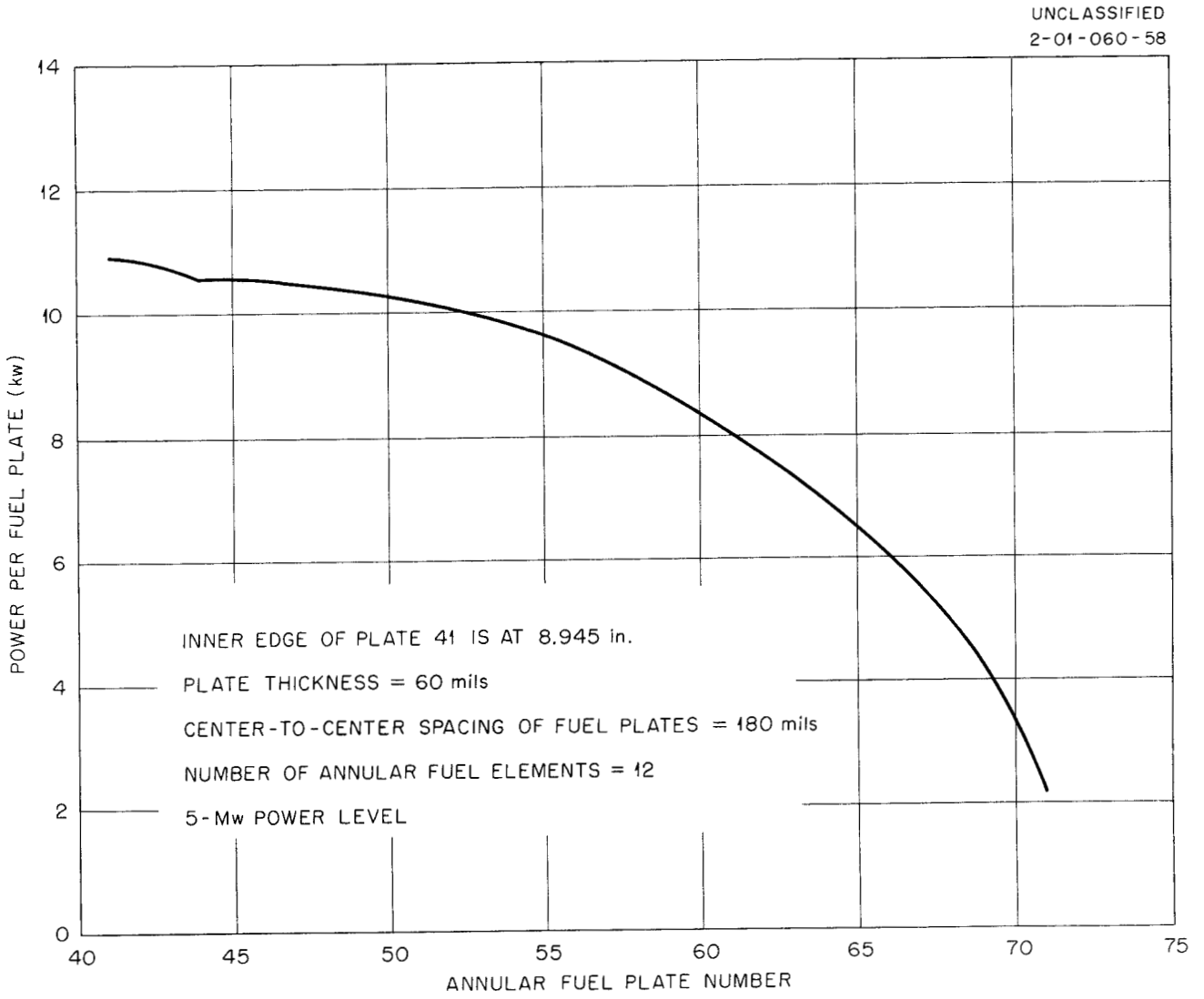

Fig. 19. Power per Fuel Plate of an Annular Fuel Element of the TSR II as a Function of Plate No.

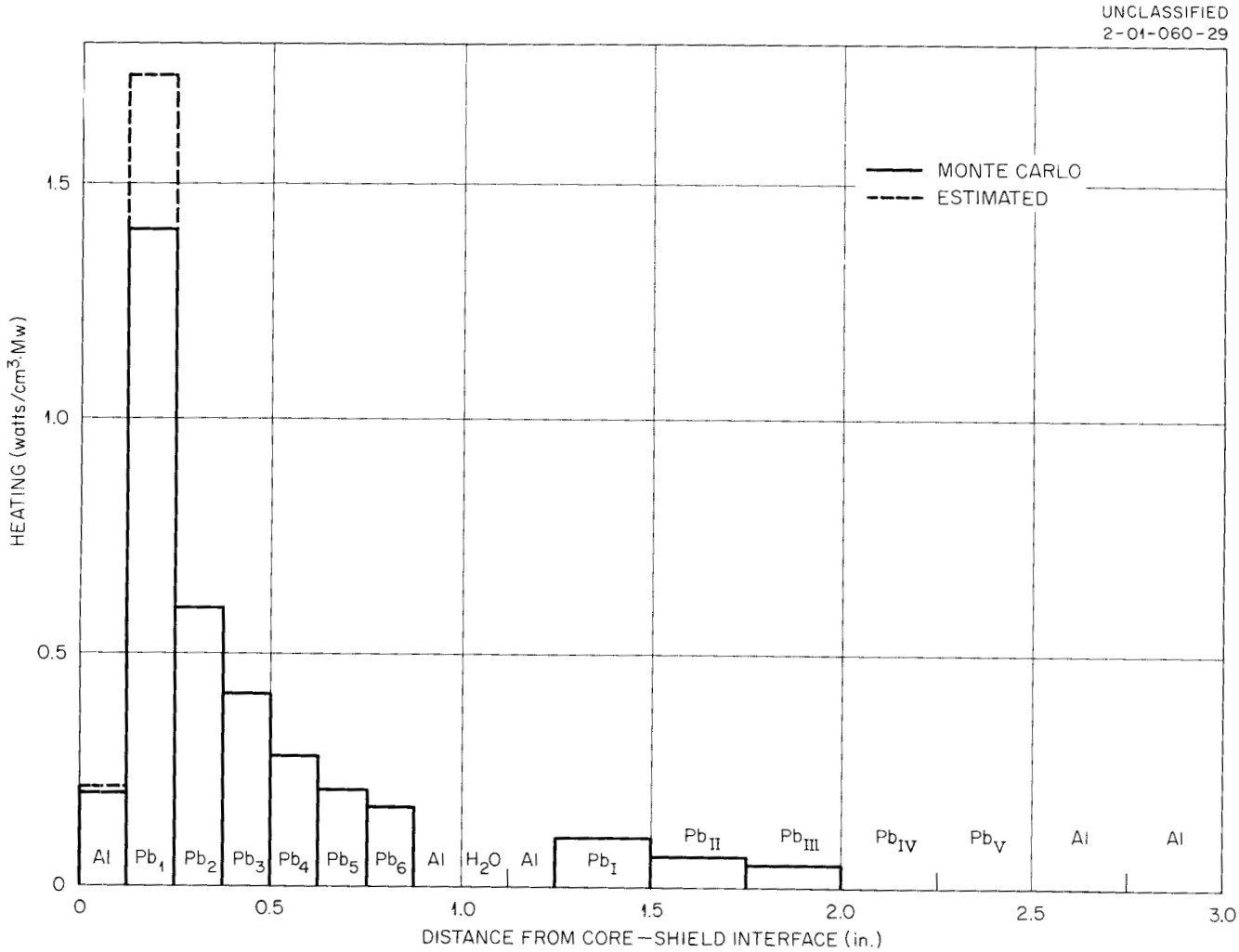

Fig. 20. Gamma-Ray Heat Generation Rates in the Lead Shield of the Proposed TSR-II as a Function of Distance from the Core-Shield Interface.

The control system designed to meet these requirements utilizes five shim-safety rods and one regulating rod, all of which are contained within the internal reflector region. These so-called "rods," which, as shown in Fig. 5 of Section I, are actually thick plates containing boron, move radially within water-filled pockets inside an aluminum sphere in the internal reflector region. Four of the shim-safety rods move horizontally and one moves downward, all five operating as a unit to provide the shim-safety rod (coarse control) action. The top rod moves independently and serves as the regulating rod (for fine control).

The mechanical construction of a typical shim-safety unit can be seen in the photographs of a disassembled unit shown in Fig. 21. The operation of this mechanism is more clearly presented in Figs. 22 and 23. The central drive shaft rotates the horizontal worm by means of miter gears, causing the non-rotating drive nut to move horizontally. The piston, rigidly attached to the rod, maintains firm contact with the nut because the hydraulic pressure of the water to the left of the piston is greater than that to the right of the nut. This water pressure is supplied by a special pump located on the reactor tank. As the piston and control rod move farther to the right, compressing the spring, the force exerted by this spring on the rod approaches the force produced in the opposite direction by the differential water pressure across the piston. A scram is triggered by a drop in water pressure at the left of the piston, permitting the spring to separate the piston from the nut and drive the rod radially outward. Rotating the drive shaft in the proper direction will traverse the nut outward until it contacts the piston, at which position the hydraulic pressure differential is re-established to again cause the piston and nut to cling together and operate as a unit. The other four shim-safety rod units operate in the same manner, the total travel of each control rod being about 2 in. It should be noted that the scramming motion is caused by the force of springs rather than gravity; therefore, scrams are independent of the reactor orientation.

A prototype of the control mechanism has undergone a life test of 5000 cycles. (It is expected that the control mechanism in the TSR-II will be operated less than 2000 times in its normal life.) The prototype was mounted on a test stand which was placed in a stainless steel barrel. The mechanism was

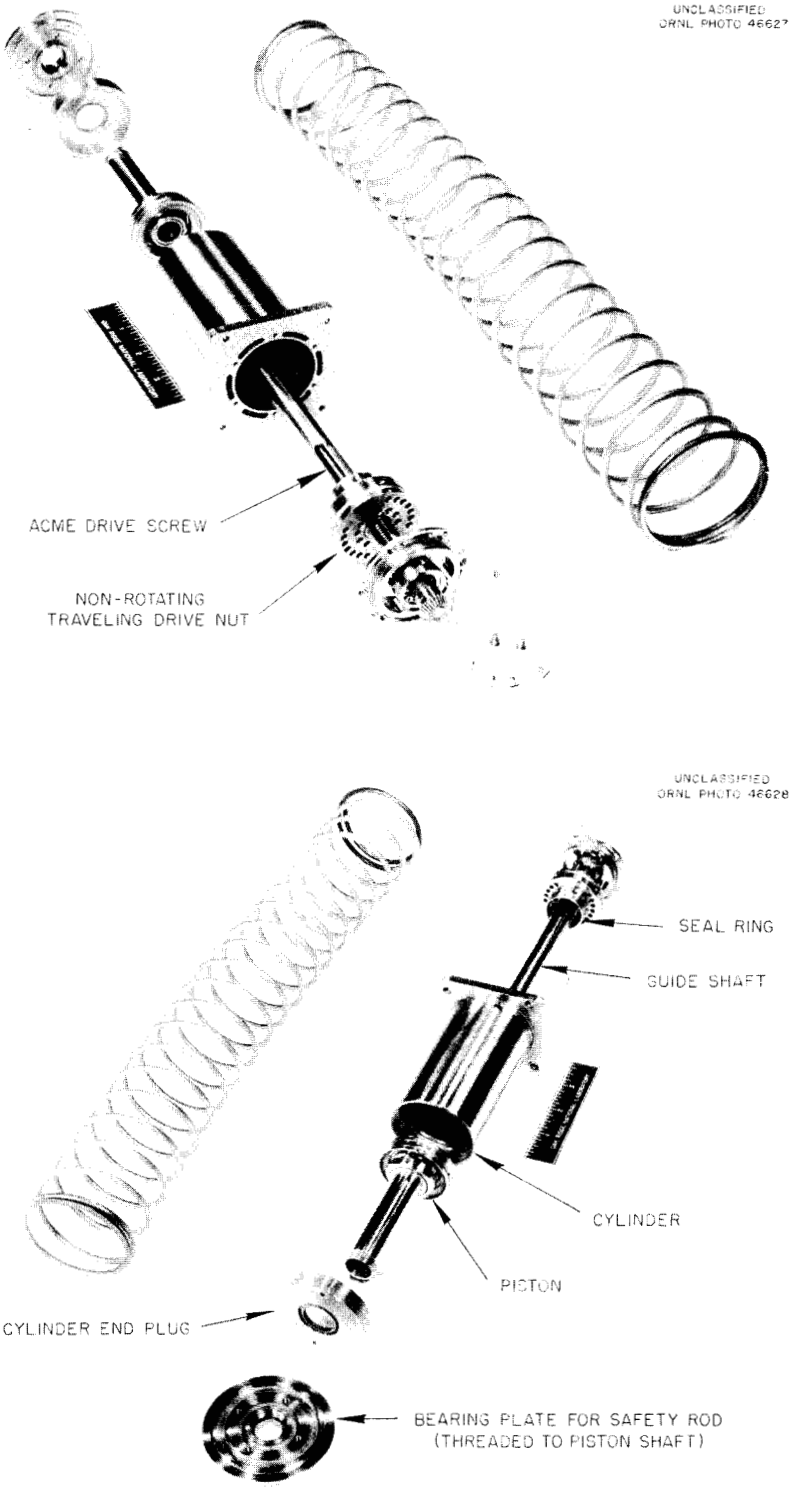

Fig. 21. Exploded Views of TSR-II Control Rod Drive.

UNCLASSIFIED
2-01-060-80

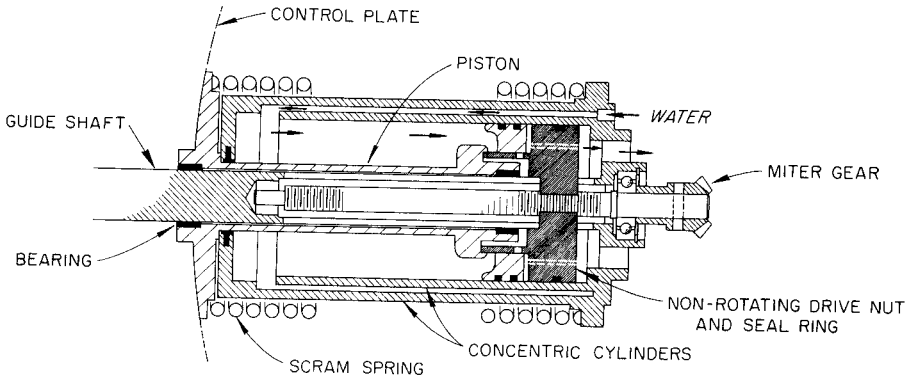

(*a*) Operating Position: Piston Under Command of Drive Nut.

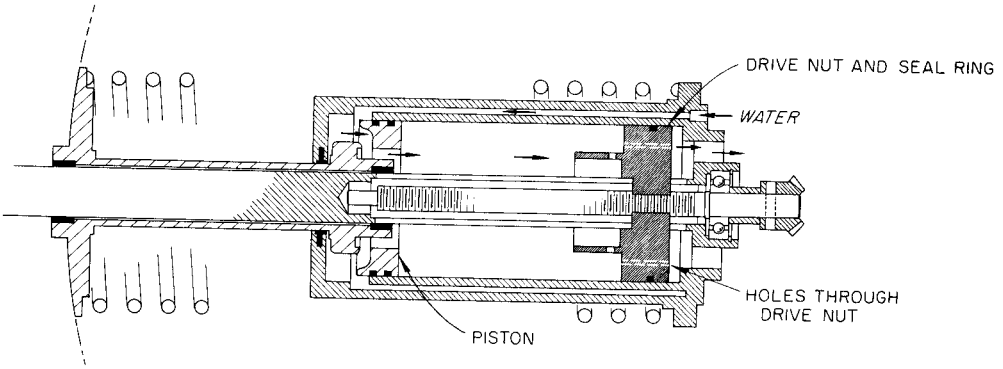

(*b*) Scrammed Position: Piston Independent of Drive Nut.

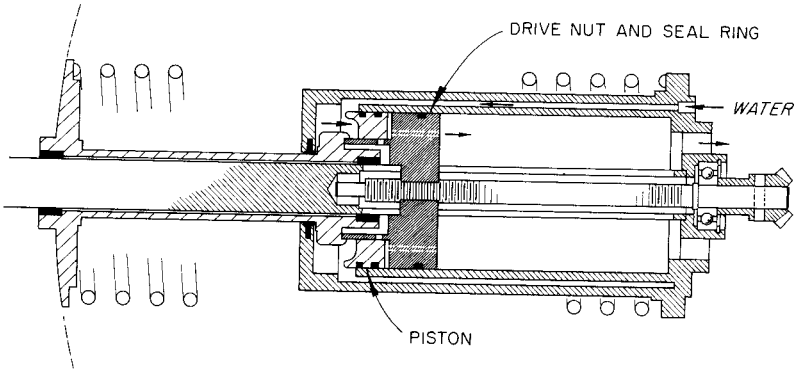

(*c*) Drive Nut Traversed Outward and Reassuming Command of Piston.

Fig. 22. Schematic of TSR-II Control Rod Drive in Three Positions.

UNCLASSIFIED
2-01-060-61

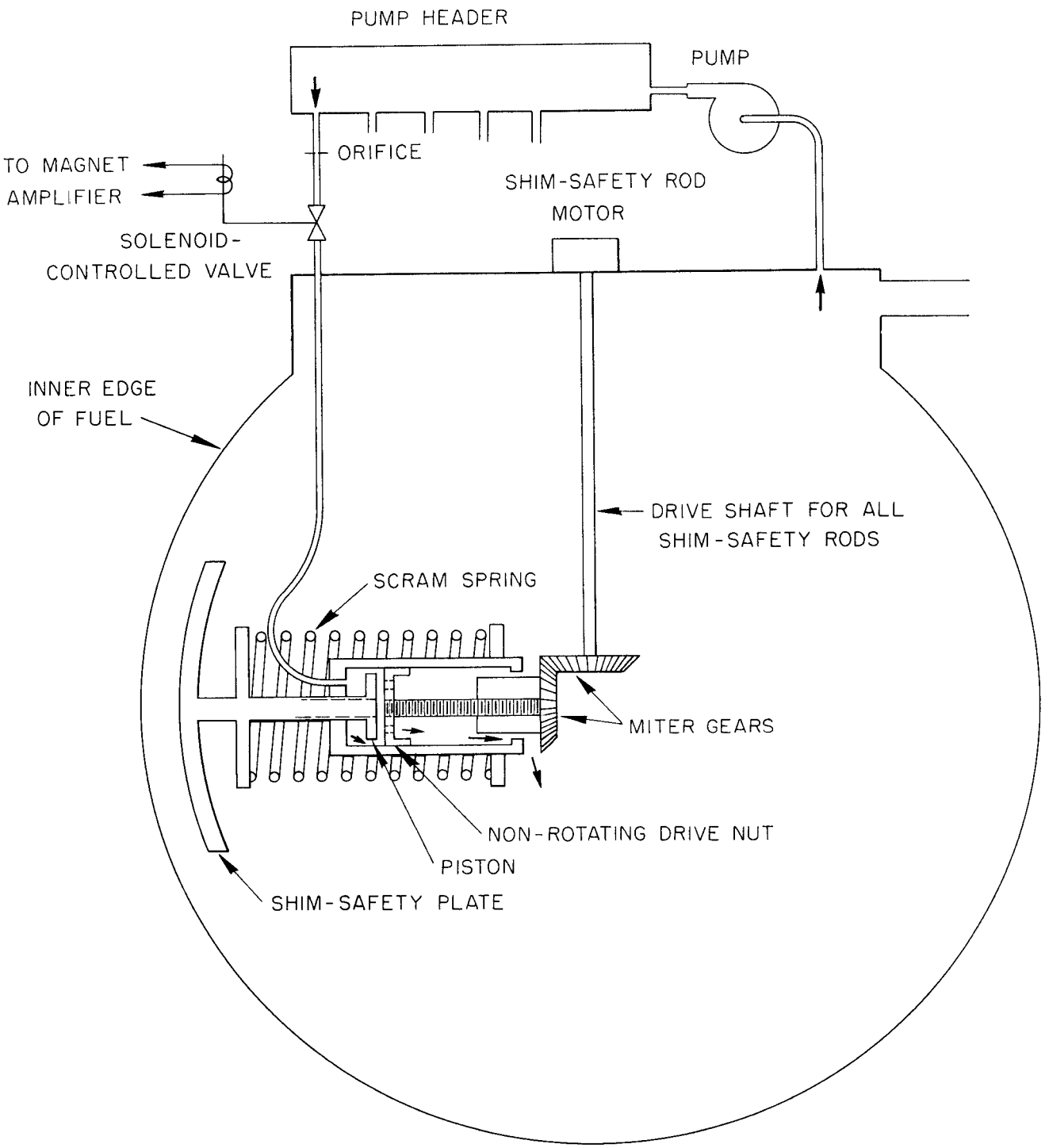

Fig. 23. Simplified Diagram of Shim-Safety System.

operated at twice the proposed frequency in raw water which was heated part of the time. At various times during the test the cycling action was stopped for 48 hr to simulate normal shutdown. No noticeable wear was apparent at the conclusion of the test. Nor were there any signs of clogging or scoring by foreign materials. The wiper ring on the traveling nut had accumulated some debris, which indicated that it had cleaned the cylinder wall as intended. In the reactor, demineralized filtered water will be used, which should reduce the buildup of the debris.

Separate water lines lead from a common manifold to the five independent shim-safety rod mechanisms. Each line contains a flow-limiting orifice and a flow-regulating solenoid-controlled valve which responds to electric signals from a standard ORNL magnet amplifier circuit. When the solenoid is de-energized, an internal spring closes the valve (see Fig. 24). At reactor startup the solenoid current is at its maximum and the valve stem, integral with the solenoid plunger, assumes the fully withdrawn position, permitting about 1.8 gpm of water to flow to the control mechanism where it leaks past the loose-fitting piston. As the reactor power increases, the solenoid current is reduced and the valve opening is reduced a corresponding amount, resulting in lower flow and a lower pressure drop across the piston of the control mechanism. The system is adjusted so that at 150 percent of the maximum permissible reactor power the water flow becomes so restricted that the scramming spring overcomes the hydraulic forces on the piston and drives the shim-safety rod outward to produce a scram. The reactor operator may read the solenoid current and hydraulic pressure at the reactor console, a monitoring feature which contributes to the safe operation of the reactor.

The shim-safety rod drive permits the addition of reactivity at a rate of 0.1% $\Delta k/k$ per second. For greater operating convenience, a slower speed giving an addition of 0.02% $\Delta k/k$ per second is also provided. Full motion of the shim-safety rods changes the reactivity a total of 2.55% $\Delta k/k$.

Since the regulating rod operates independently of the shim-safety rods, it is fastened directly to a nonrotating tube which is concentric with the geared shaft to which the five shim-safety rods are attached. There is no quick-release scramming mechanism associated with the regulating rod, its only movement being a slow rising or lowering by means of an electric motor drive. The regulating rod has a total worth of approximately 0.5% $\Delta k/k$ and a sensitivity of 0.03% $\Delta k/k$ per second.

UNCLASSIFIED
2-01-060-71

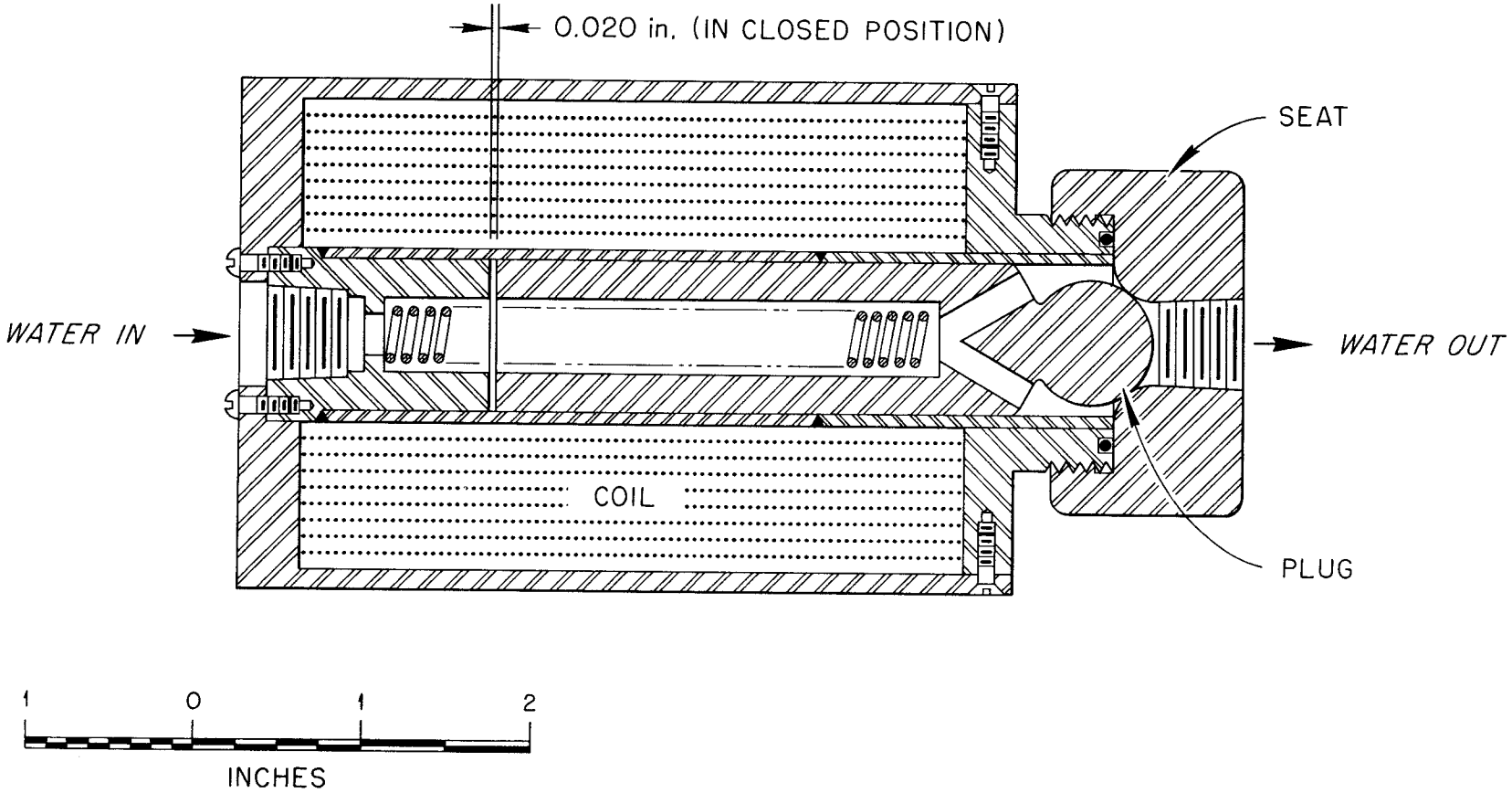

Fig. 24. Flow-Regulating Solenoid-Controlled Valve.

A signal from each of the five shim-safety rods indicates to the operator, by means of panel lights, when the rod is in the fully extended (scrammed) position. The signal is initiated when a tiny nozzle at each rod is blocked. Water pressure is supplied to the nozzle by a pump located in the control turret, and blocking the nozzle reduces water flow in the line connecting it to the pump, thereby actuating a pressure-sensitive seat switch connected across the nozzle of that particular control rod.

Upper and lower limit switches are actuated directly by the rod drives to indicate the fully inserted or withdrawn rod positions. A dual synchro system is used to indicate the position of the shim-safety rod drive while a single synchro indicates the regulating rod position. Shim-safety rod pickup, a magnetic operation in most reactors, is a function of the differential hydraulic pressure in this reactor, and such "clutch" information is indicated individually for the five shim-safety rods by five pressure gages located at the reactor control console.

The TSR-II safety system[5] is designed so that it shuts down the reactor whenever it receives a signal that the power level is too high or the reactor period is too short. A block diagram of the primary system is shown in Fig. 25. The neutron level is sensed by the three 2-in. PCP ion chambers.* The signal is then amplified and presented to the sigma bus which responds to the highest amplifier output signal. If any one of these amplifiers indicates the neutron level is too high it causes all magnet amplifiers to reduce the current flowing in their respective solenoid-controlled valves and thus a scram is produced. Similarly, a period that is shorter than 3 sec, will, by the period and sigma sections of the composite amplifier, reduce the solenoid current and cause a scram.

The following control and/or safety information is presented to the operator at all times during an operation:

(1) The neutron population from source level to full power is obtained from a fission chamber** and associated electronic equipment. The information is presented in logarithmic form and covers five decades from any given

5. Given in detail in ORNL-2609, Neutron Phys. Ann. Prog. Rep. Sept. 1, 1958, p. 20.

*Parallel circular plate ionization chambers, designed and built at ORNL.
**This fission chamber was constructed from ORNL design drawing No. Q-2014.

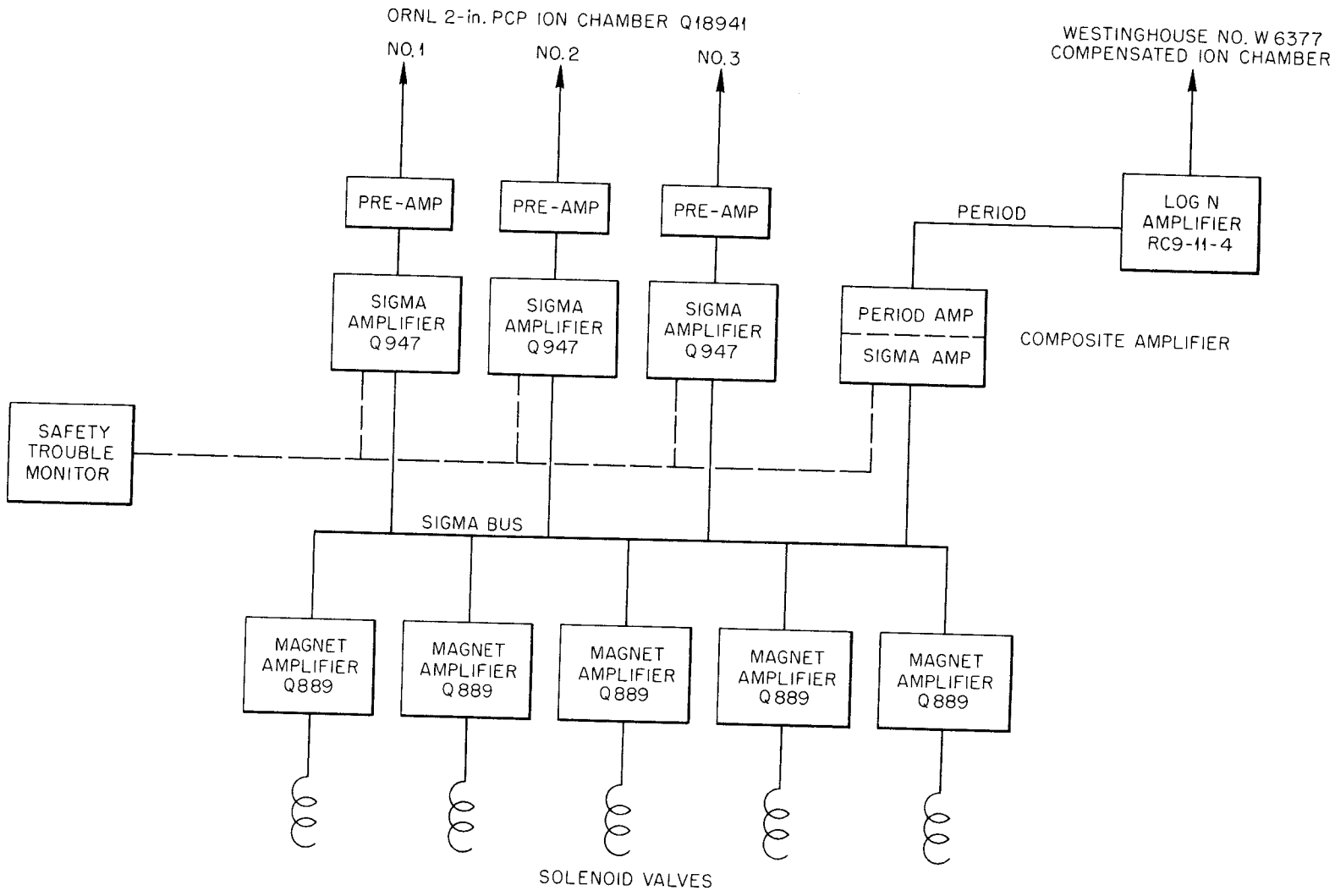

Fig. 25. Block Diagram of TSR-II Primary Safety System.

position of the fission chamber. The chamber may be moved remotely to cover the full range of reactor power.

(2) The power level is presented on two channels: (a) A Westinghouse WL-6377 compensated ion chamber and a Log N amplifier provide a five-decade logarithmic presentation of power level; and (b) a Westinghouse WL-6377 compensated chamber and a micromicroammeter provide a linear power indication from the limit of compensation of the chamber, approximately 10^{-5} full power, up to full power.

(3) Period information is obtained by differentiating the output of 2(a) above, which gives d Log N/dt.

(4) The safety chamber currents may be read from monitor instruments. All chambers used in the reactor are sealed and require no purge gas.

A servo system is provided to maintain the power level at any point within the operating range. The servo is of the on-off type used in the Bulk Shielding Reactor and the Pool Critical Assembly.

Design improvements have made it possible to remove virtually all the electronic instruments from the vicinity of the reactor and relocate them in the control room. The only electronic chassis remaining at the reactor is the pulse preamplifier in the fission chamber circuit.

A time delay interlock prevents starting the reactor until the main pump has circulated water through the reactor at full flow for a period of 3 min. This allows the water to make one complete pass through the system; such mixing will help smooth out any temperature gradients. After startup, reduction of main pump flow to below approximately 100 gpm will produce a scram. Likewise, if the emergency pump flow falls below 10 gpm, a reverse is produced causing automatic insertion of the control rod. Both of these minimum water-flow requirements may be bypassed for special low-power reactor tests, and the aerial hoses to the reactor may be left disconnected if desired. For such operations an additional control command prevents the power level from rising above 500 watts.

IV. REACTOR SAFETY

The performance of the TSR-II safety system has been predicted on the basis of three analog computer tests simulating the reactor kinetics and heat transfer system. Each test represents the limiting case for the type of accident considered. The configuration assumed for these tests included the reactor tank and the associated inlet and outlet pipes. It did not include the water coolant system external to the reactor tank since the choice of the initial conditions for the tests precluded the need for an analysis of the external system. The test parameters and consitions are shown in Fig. 26.

In the first test, a simulated rod-drop test, it was found that for 100-kw operation the safety system is capable of reversing a 14.5-msec period with a power excursion to a peak power of 20.2 Mw without the advantage of the negative temperature coefficient being considered. By comparison, the peak power in the Spert I Reactor,[6] which was limited only by the inherent safety mechanisms of water-moderated reactors, was approximately 350 Mw for a 15.8-msec period.

The second simulated test was run to determine the effect of suddenly reducing the temperature of the inlet cooling water while the reactor is operating at a power of 5 Mw, and the third test was carried out to determine the effect of a sudden stoppage in the water flow.

It is apparent from the results of these three tests that if the excess in the reactor does not exceed 1.0% $\Delta k/k$, no reactor excursion could occur that would result in damage to the reactor, and if the power level is limited to 100 kw there would be no afterheat problem and possible meltdown in the event the cooling water is lost. As stated previously, the excess for the low-power experiments proposed in Section V will be limited to 0.7% $\Delta k/k$.

A more detailed discussion of the three simulator tests is presented in the paragraphs below and is followed by a brief discussion of the TSR-II as compared with the Spert I Reactor.

---

6. J. C. Haire, Subcooled Transient Tests in the Spert I Reactor - Experimental Data, TID-16342 (1958).

UNCLASSIFIED
2-01-060-64

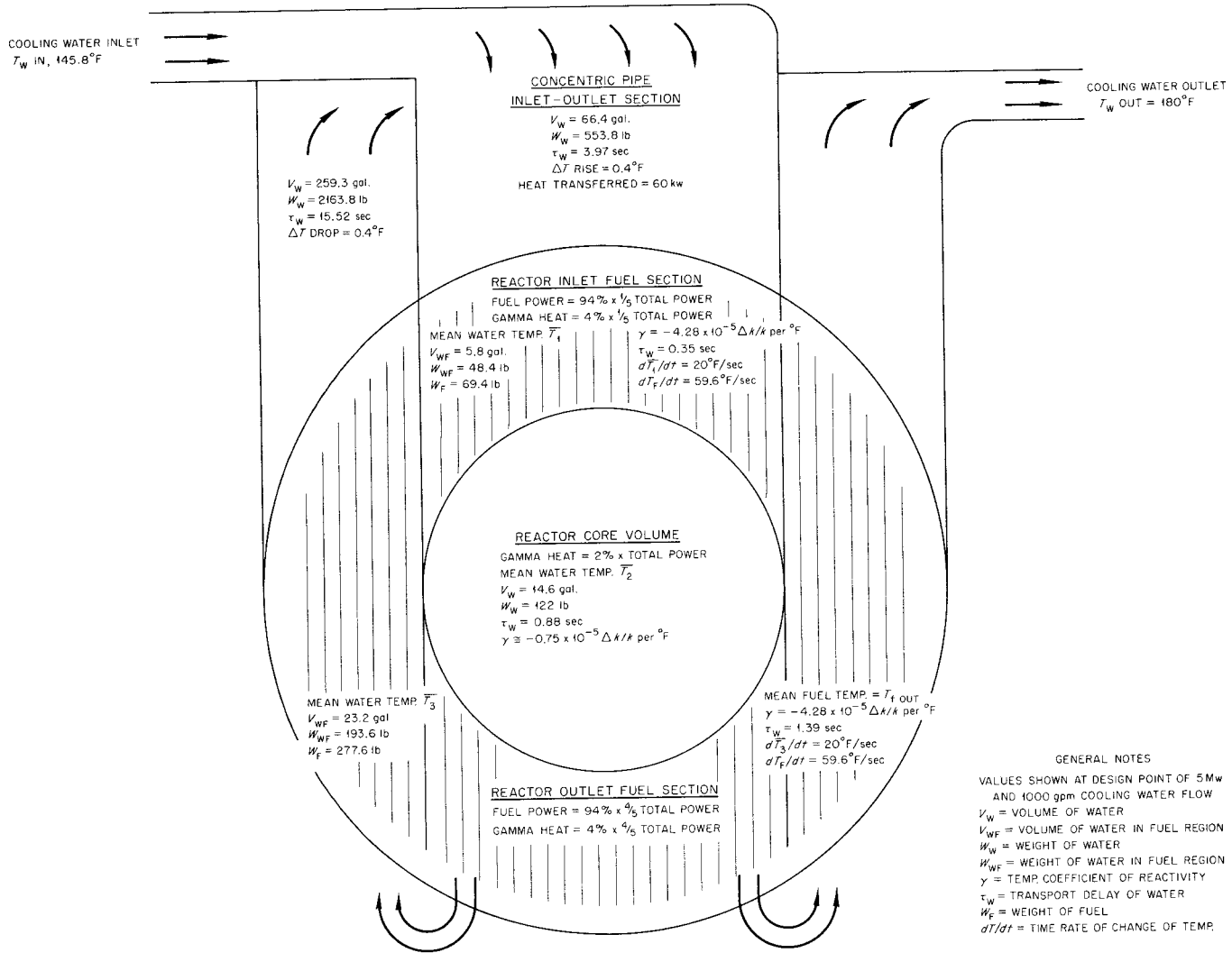

GENERAL NOTES

VALUES SHOWN AT DESIGN POINT OF 5 Mw AND 1000 gpm COOLING WATER FLOW

V_W = VOLUME OF WATER
V_{WF} = VOLUME OF WATER IN FUEL REGION
W_W = WEIGHT OF WATER
W_{WF} = WEIGHT OF WATER IN FUEL REGION
γ = TEMP. COEFFICIENT OF REACTIVITY
τ_W = TRANSPORT DELAY OF WATER
W_F = WEIGHT OF FUEL
dT/dt = TIME RATE OF CHANGE OF TEMP.

Fig. 26. Test Parameters and Conditions Used for TSR-II Safety Study.

Analog Computer Tests

Rod-Drop Test. The TSR-II rod-drop test was performed to determine the minimum period for which the safety system could reverse an excursion in less than a three-decade power rise from the instant the instruments first detected the excursion. In the analog technique used,[7] the reactor simulator (computer) at time t = 0 is clamped in transient at a low level represented by a voltage of 0.1 to 0.5 v. This voltage is proportional to reactor power or flux and, by proper adjustment of the computer parameters, can be made to represent a nuclear power. At t = 0 the clamp is removed and the safety system is given the information that an excursion is in progress. The simulation allows for the safety system delay, provides the corrective action, and shows the reactor behavior, heat transfer characteristics, and component temperature rises during the complete transient.

In the TSR-II test the initial power of 0.5 (Fig. 27) corresponds to a power of 5 Mw. A three-decade rise then would yield a peak power of 5000 Mw. Since the level safety of the TSR-II is intended to actuate a scram at 150 percent of the maximum power, the level safety was assumed to be 7.5 Mw. At 7.5 Mw information was supplied to the safety actuator requesting a scram. A delay of 37 msec in the safety device was simulated, during which time the excursion continued unaltered. The corrective action was then initiated, after which the excursion was reversed and the simulated reactor was shut down. Since the test was for the safety system, the effect of the negative water coolant temperature coefficient, which would only have improved the performance of the safety system, was not considered.

The power excursion curves obtained in this test are shown in Fig. 27, along with the safety rod reactivity profile. The associated reactor period is noted alongside each power excursion curve. From these data it can be seen that the TSR-II safety system is capable of reversing a power excursion caused by a 14.5-msec period with a maximum power rise of 2.02×10^2 above the initial power; that is, with a peak power of 1010 Mw.

---

7. E. R. Mann and F. P. Green, "Analogue Simulation of Corrective Action for a Nuclear Excursion," Reactor Safety System Response, ORNL-2318, p. 83 (1958).

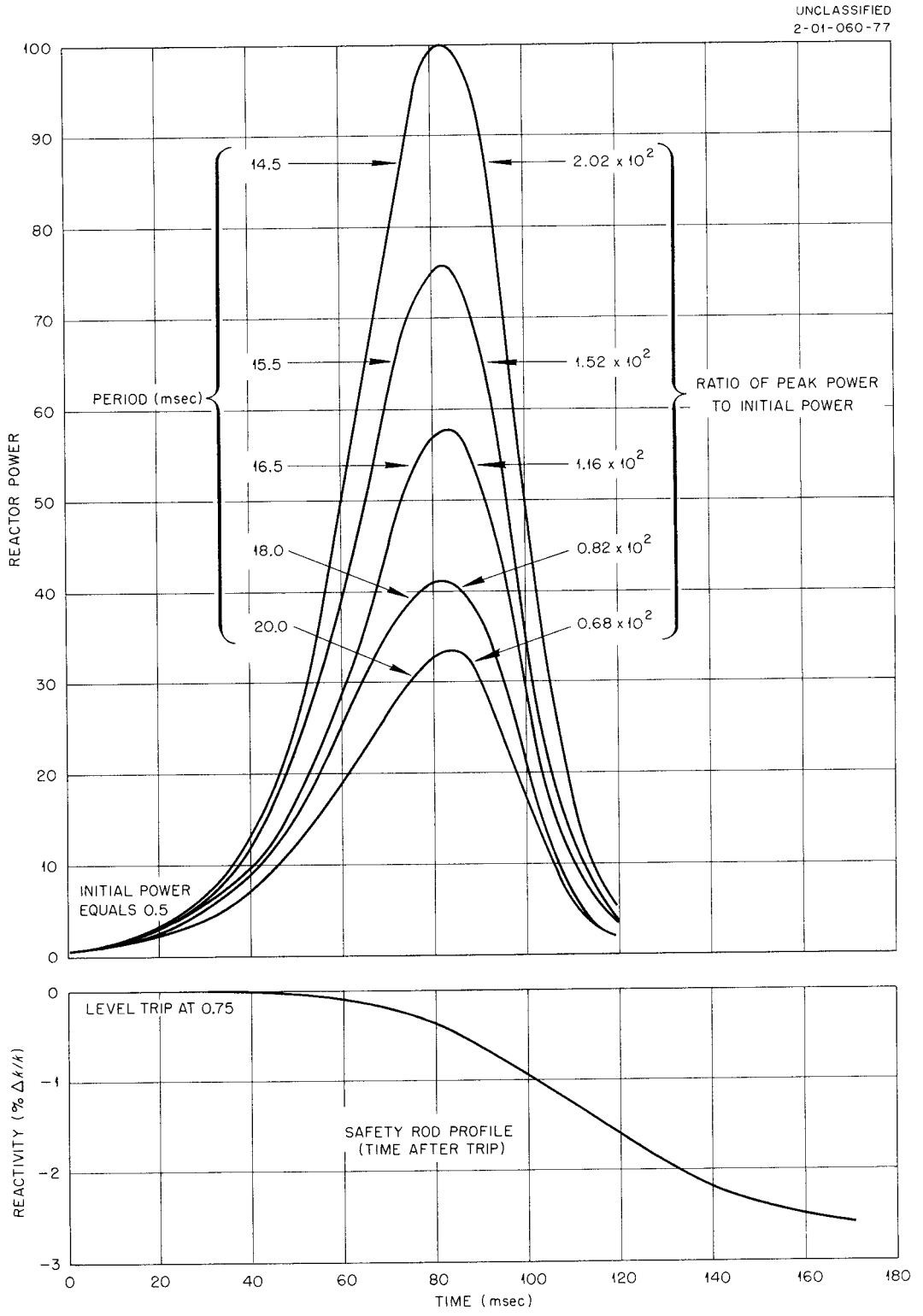

Fig. 27. Effectiveness of TSR-II Safety System in Limiting Power Excursions for Various Reactor Periods.

The mean temperature increase of the fuel in the annular elements and the temperature rise of the water in the annular fuel region are shown in Fig. 28 for each of the power excursions plotted in Fig. 27.

For the proposed low-power experiments, the level safety will be set at 150 kw. The peak power for an excursion caused by a 14.5-msec period then would be 20.2 Mw.

"Cold-Water Slugging" Test. Because of the negative coefficient of reactivity of the TSR-II, an analog simulator test was performed to investigate the effects of a sudden drop in the reactor inlet cooling water temperature. Figures 29 and 30 show the effects on the reactor power and temperature of suddenly changing, within 0.5 sec, the inlet cooling water temperature from 145.8°F to 32°F while the reactor is operating at 5 Mw. Figure 29 is for an assumed coefficient of $-4.28 \times 10^{-5}\ \Delta k/k$ per °F and Fig. 30 is for an assumed coefficient of $-6.5 \times 10^{-5}\ \Delta k/k$ per °F. Prompt gamma-ray heating was included in the simulation. No safety rod action or control rod action was permitted.

The simulation has no validity in the cross-hatched areas of the figure since no attempt was made to simulate boiling conditions within the reactor. An assumed pressure of 10 psig was used to calculate the boiling temperature of 239°F.

The "cold-water slugging" analysis was carried out without actuating the safety system. It should be noted that there is far more than adequate time for the safety system to shut the reactor down before the fuel temperature rises appreciably since the safety system can complete its action in less than 150 msec (Fig. 27).

Water-Flow Stoppage Test. Mechanical conditions inherent in the design of the TSR-II cooling water system prompted a test to determine the effects of a sudden stoppage of the coolant water flow. Figure 31 shows the results for an assumed temperature coefficient of $-4.28 \times 10^{-5}\ \Delta k/k$ per °F. Prompt gamma-ray heating was again included in the simulation, and no safety or control rod action was permitted. The simulation included only the annular fuel region

UNCLASSIFIED
2-01-060-78

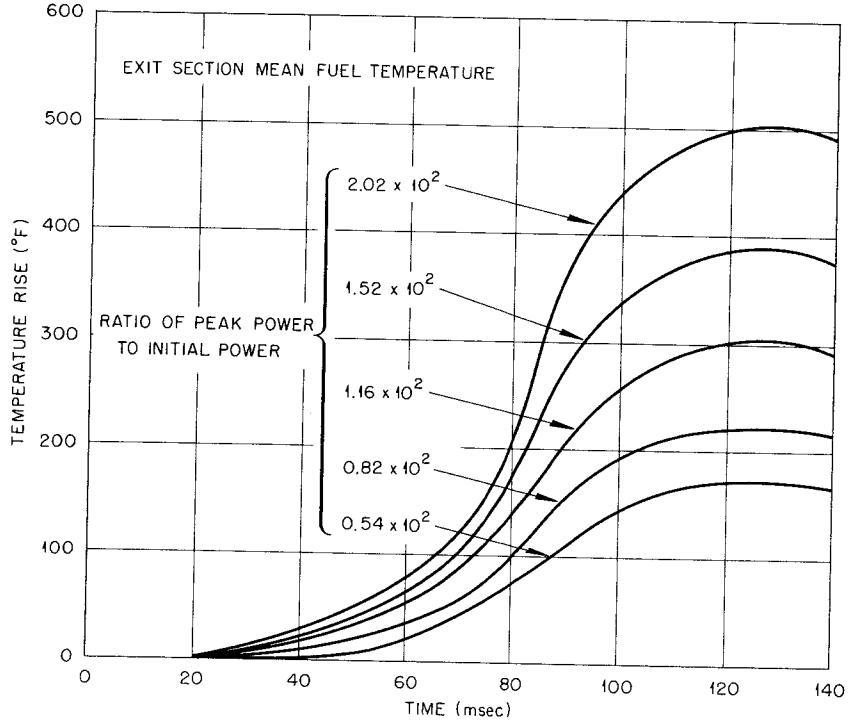

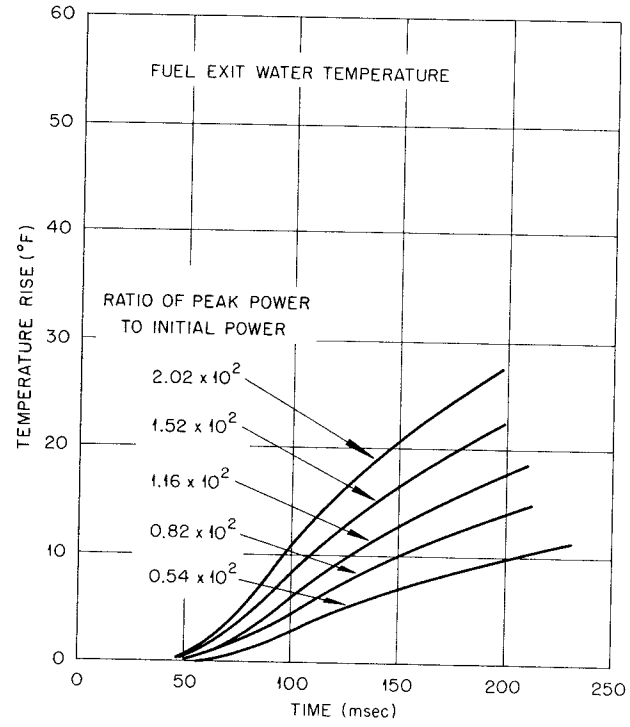

Fig. 28. Temperature Increase in Annular Fuel Element Region for Various Power Excursions.

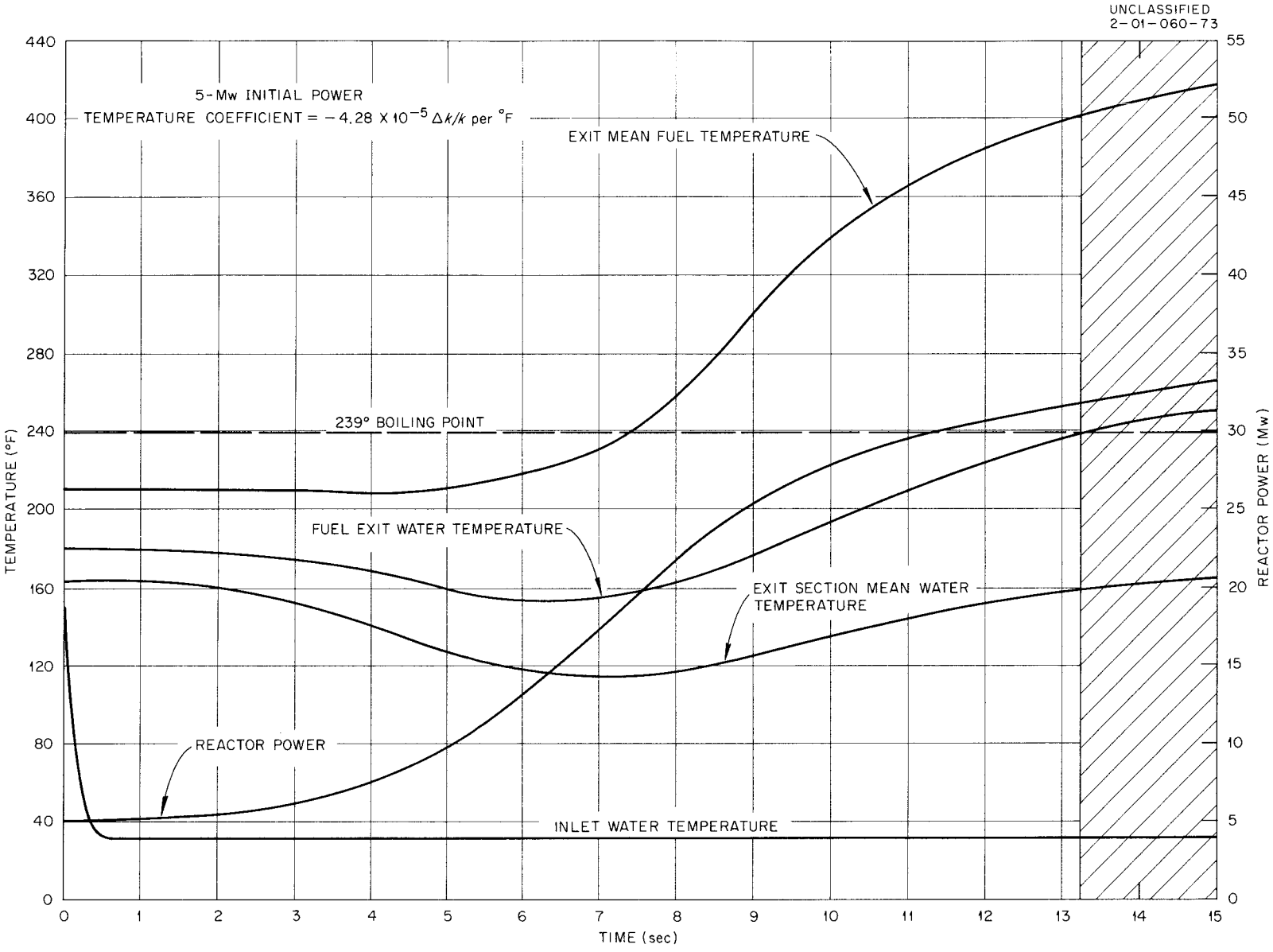

Fig. 29. Effect on Reactor Power and Temperatures of Reducing the Inlet Water Temperature from 145.8°F to 32°F (Temperature Coefficient = -4.28×10^{-5} $\Delta k/k$ per °F).

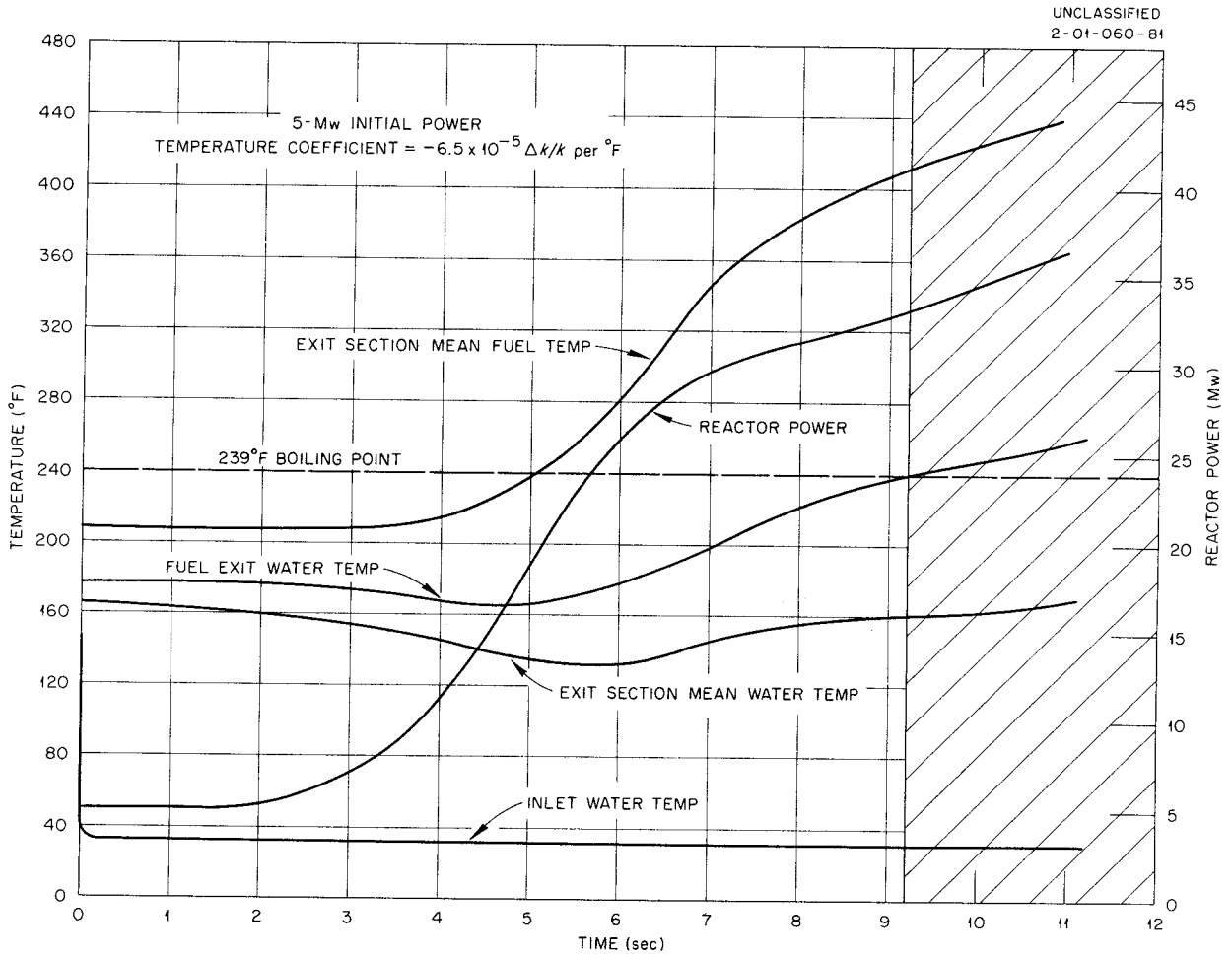

Fig. 30. Effect on Reactor Power and Temperatures of Reducing the Inlet Water Temperature from 145.8°F to 32°F (Temperature Coefficient = -6.5×10^{-5} $\Delta k/k$ per °F).

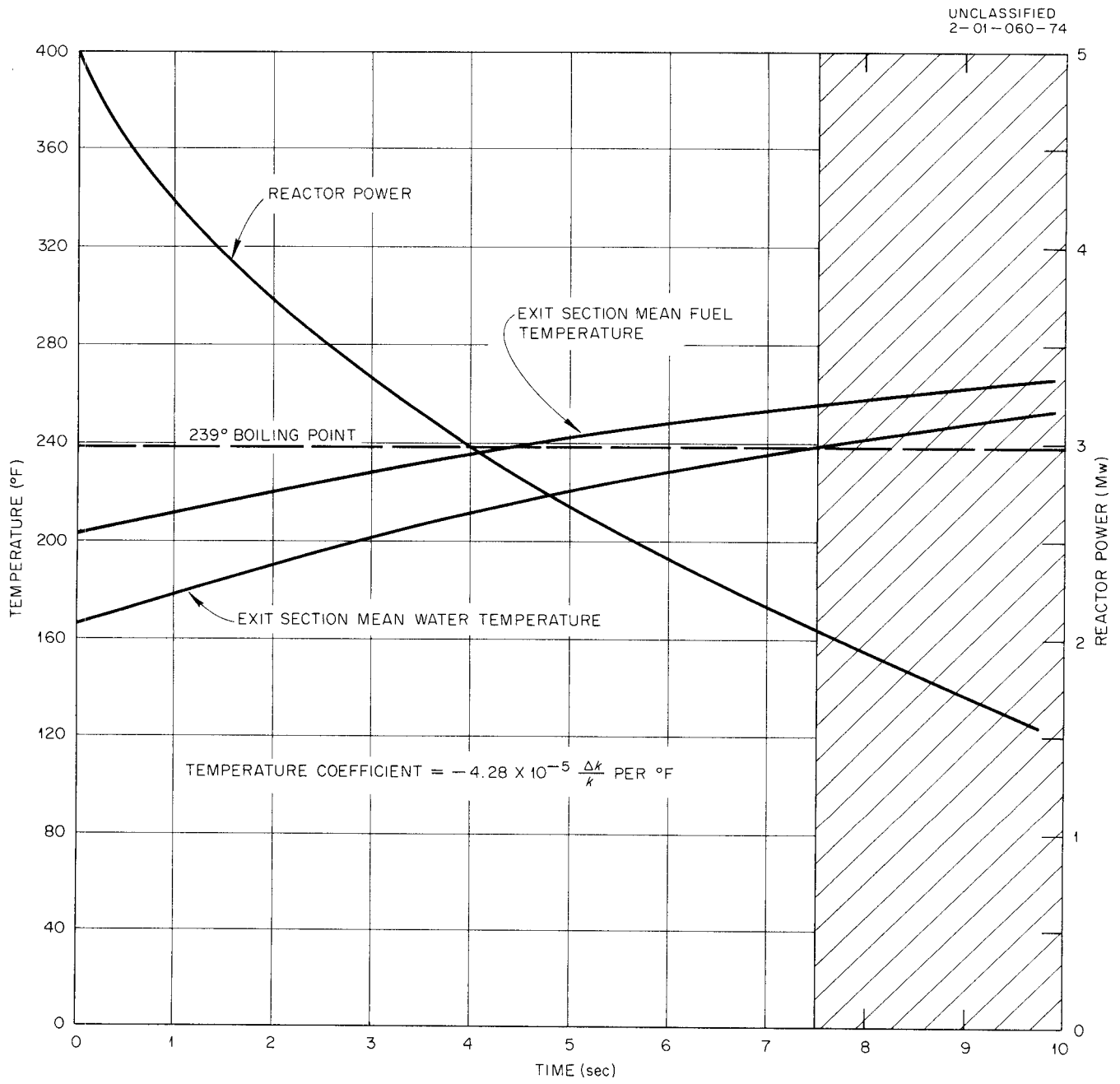

Fig. 31. Effect of Sudden Water Flow Stoppage on Reactor Power and Temperatures.

of the reactor since this is where the highest temperatures are most likely to be located. Again the simulation has no validity for the cross hatched area in Fig. 31. As before, the test showed that the safety system could easily shut the reactor down before any appreciable change occurs in the temperature profile.

Comparison of TSR-II to Spert I Test

The excess loading of 0.7% $\Delta k/k$ to which the TSR-II will be limited for the low-power experiments falls well below the 1.5% $\Delta k/k$ where instabilities[8] became evident with saturated water conditions in the Spert I Reactor. The subcooled Spert I tests, however, provide an additional basis for evaluating the effectiveness of the TSR-II safety system in limiting an excursion. For a 50-μsec prompt thermal-neutron generation time, which is the generation time in both the Spert I Reactor and the TSR-II, the stable period for a reactivity insertion of 0.7% $\Delta k/k$ is 25 msec. In the unlimited Spert I tests, a 23-msec period resulted in a maximum power of approximately 110 Mw, and neither the pressure nor the temperature rise was sufficient to cause damage to the core. For a 20.0-msec stable period in the simulated 100-kw TSR-II rod-drop test, the safety system limited the excursion to approximately 3.3 Mw (Fig. 27), which is more than a factor of 30 lower in peak power than that observed in the Spert I Reactor. Maximum temperatures and pressures are correspondingly lower. In the simulated TSR-II rod-drop test the minimum period which was examined was 14.5 msec. For a 100-kw operation this gave a peak power of 20.2 Mw. In the Spert I Reactor tests the peak power for a 15.8-msec period was approximately 350 Mw, which is very close to a factor of 17 higher.

V. PROPOSED LOW-POWER EXPERIMENTS

As mentioned previously, several low-power experiments with the TSR-II core assembly will be required before the nuclear characteristics of the reactor can be firmly established. The initial experiment will, of course, be performed to determine the critical condition of the reactor and to test

8. S. G. Forbes, F. Schroeder, and W. M. Nyer, Nucleonics 15, No. 1, 41 (1957).

the safety system, after which the adjustment to the 0.7% $\Delta k/k$ excess required for the remaining experiments can be made. Experiments to calibrate the control and safety rods, to measure the bulk temperature coefficient of reactivity, to determine the void coefficients, etc. will then be carried out.

All of the proposed experiments will be performed at the Tower Shielding Facility. A power of 100 kw will be required for some operations, although most of the experiments will be carried out at a power considerably lower than 100 kw. The total operating time at 100 kw will not exceed 500 hr.

The various experiments are described briefly in the following paragraphs.

Reactivity Adjustment

Since it will not be necessary for the water coolant to flow through the core assembly during the initial low-power critical experiment, the assembly will not be mounted in the TSR-II reactor tank. Instead, the fuel elements, internal reflector, and control system will be supported by the central cylinder in an open-top tank that can be slowly filled with water. The lead-boral shield will receive separate support from a stand in the tank. The water for the controls will be obtained directly from the experimental tank so that the water level in the tank will remain constant. Water will be circulated through the control mechanism at approximately 8 gpm.

The experimental tank will be a 4-ft-dia stainless steel cylinder placed about 5 ft above the floor of the drained 25-ft-deep reactor handling pool as shown in Fig. 32. Water will be provided for the experiment in a second tank which will be placed at a lower level in the pool than the experimental tank. This second tank will be equipped so that accurate measurements of the quantity of water it contains can be made at any time. The water will be transferred to the experimental tank by a constant displacement pump, the water level in the experimental tank being observed continuously through closed-circuit TV cameras with additional monitoring by a float-actuated upper and lower level indicator. Automatic dumping of the water from the tank will

UNCLASSIFIED
2-01-060-72

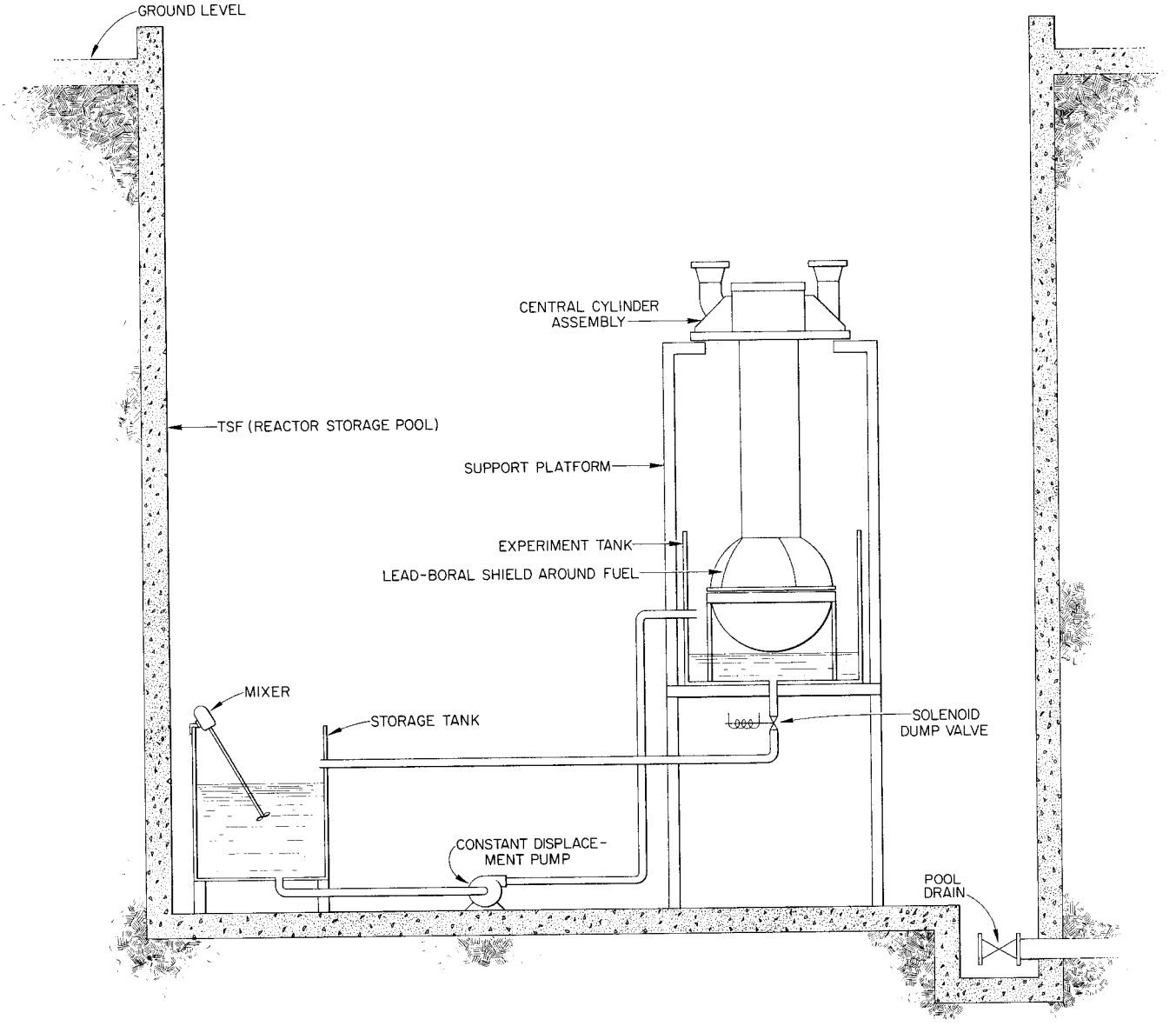

Fig. 32. Experimental Setup for TSR-II Critical Loading.

be initiated either by a level scram or by a period scram. (There will be no danger of the handling pool being accidentally filled with water during the experiment since the drains will be locked open. The maximum filling rate is 6 in./hr, whereas the draining rate is about 1 ft/min.)

The procedure used for the initial critical loading will follow the technique employed at the ORNL Critical Experiments Facility. Before the fuel is loaded, the control and safety systems will be installed in a fully operating condition. The reactor core will then be completely assembled in the drained experimental tank, and additional low-level chambers, which will be connected to the safety system, will be positioned near the core. Operation of the chambers will be checked in paraffin with a Po-Be source, after which the source will be moved to a position adjacent to the fuel elements. The main dump valve in the experimental tank will then be closed and a small amount of water will be pumped into the tank. (The water level will be below the fuel elements.) The pump to operate the control mechanisms will then be started, and the operation of the mechanisms will be checked. The control and shim-safety rods will then be withdrawn halfway, and the water required for the critical experiment will be pumped into the tank.

As the water level in the experimental tank rises, the change in the count rate from the fission chamber will be observed continuously. Although it is not anticipated that the reactor will become critical before the water fills the tank, provision for rapid reduction in criticality is provided during this period by the large dump valve at the bottom of the experimental tank. When the level of the water in the tank is approximately 20 cm above the core assembly, the shim-safety rods will be carefully withdrawn to the critical position. The criticality point will be checked by obtaining two power levels for the same position of the rods. When it has been established that the reactor and its controls are operating satisfactorily, the power level will be raised slowly to test the level scrams, which will be set at the lowest practical level.

If in the first attempt it is not possible to reach criticality, some of the solid aluminum plugs in the control mechanism housing in the internal reflector region (see Fig. 5) will be replaced with air-filled plugs to increase the reactivity, and the approach to criticality will be repeated as

described above. More probably, it will be found that the excess in the reactor is more than the 0.7% $\Delta k/k$ required for the low-power experiments, in which case some of the solid aluminum plugs in the control mechanism housing will be replaced with boron-loaded plugs. Before any plug exchange can be made, however, the experimental tank will have to be drained and the upper fuel elements and control housing removed from the assembly. It will then be reassembled for another critical experiment.

Regulating Rod Calibrations

The regulating rod will be calibrated with the core assembly still in the experimental tank by taking period measurements for a given rod movement and then calculating with the inhour equation the reactivity worth of that movement of the rod. By adjusting the position of the shim-safety rods, the full travel of the regulating rod will be calibrated.

Shim-Safety Rod Calibration and Excess Loading Measurements

Since it is not possible to move the shim-safety rods independently, the calibration of these rods must be done by two different methods to cover the entire rod travel. The worth of the shim rods from the critical position to their fully withdrawn position, and also the excess loading of the reactor, will be measured by adding solutions of boric acid to the experimental tank. A known amount of boric acid solution of a specified concentration will be placed in a known volume of water in the supply tank. After it has been thoroughly mixed the solution will be pumped into the experimental tank and the control rods will be withdrawn until the reactor is critical. The process will be repeated for several rod positions until the reactor is just critical with the rods completely withdrawn. The reactivity for a given rod movement will be calculated from the change in thermal utilization within the core, and the excess k of the reactor will be equal to the integral of the measurements.

Since all rods are ganged together, it will be necesary to remove all but two of the rods from the system in order to calibrate them over their full travel. Boric acid solution will again be pumped into the experimental tank

until the reactor is just critical with the regulating rod seated and the safety rods completely withdrawn. The safety rods will then be calibrated versus the regulating rod to within approximately 1/2 cm of their full travel. The worth of the rods in the completely inserted position will be extrapolated.

The approach to critical with the boric acid solutions will always be carried out as described for the initial critical loading. The two safety rods and the automatic water dump valve will be available for an emergency shutdown should one become necessary.

Measurements of Void Coefficients

Measurements of the coefficient of reactivity for various positions of voids in the fuel and the internal reflector region will be handled as separate critical experiments. Voids will be simulated by displacing water with styrofoam and observing the reactivity change with rod positions. The core assembly will remain in the experimental tank for these measurements.

Measurement of Temperature Coefficient

For the measurement of the temperature coefficient of reactivity a heater and an agitator will be placed in the water of the experimental tank, and the regulating rod position will be measured as a function of the temperature of the core. The core temperature will be determined from thermocouple measurements at several locations in the fuel elements. The temperature coefficient can then be determined from the control rod calibrations and the observed temperatures.

It will also be necessary to determine the effect on the reactor operation of a temperature gradient through the core. This will be observed in later tests after the core assembly has been placed in the reactor tank. The reactor will be operated at powers up to 100 kw and the cooling water will flow through the reactor at a low rate.

Determination of the Effect of Adding Reactor Shields

During some of the shielding experiments at the TSF the TSR-II will be used in specially designed shields. Since each shield may affect the operation of the reactor differently, two low-power experiments will be performed with the

TSR-II in a shield. For these experiments the core assembly will remain in the reactor tank, which will stay positioned in the experimental tank. In one experiment the effect of a water shield will be determined by observing changes in the reactivity as water is pumped into the experimental tank to a level approximately 20 cm above the core. The second experiment will be performed to determine the effect of a lead and water shield. Small lead cylinders will be poured in the experimental tank around the reactor tank to a height approximately 20 cm above the top of the core, and changes in reactivity will be observed as water is pumped into the tank to the same height as the lead. The resulting shield will be 50% lead and 50% water, which is the same lead-water ratio used in the specially designed TSR-II beam shield (see Fig. 8).

Measurements of Flux Distribution and Leakage Spectra

Measurements of the thermal-neutron flux distribution in the core will be made with the reactor encased in the TSR-II beam shield. The flux distribution will be determined by the neutron activation of foils that will be inserted in the fuel elements with a foil stringer. Gold foils will be used for the first low-power ($\sim$ 1-watt) runs, and cobalt foils will be used for higher powers.

The spectrum and intensity of the leakage radiation from the beam shield as a function of direction from the reactor will also be measured during the low-power experiments. This information is needed in the shielding research for which the reactor is intended.

VI. OPERATING PROCEDURE

The same procedure used for operating the 500-kw TSR-I will be used for the TSR-II (see F. N. Watson et al., Manual of Routine and Emergency Operating Procedures for the Tower Shielding Facility, ORNL-CF-57-11-39). The low-power experiments proposed in this report will at all times be directly supervised by an engineer or scientist experienced both in reactor operation and in the performance of critical experiments. Two additional experienced technical persons will be present during the critical experiments, and one additional technical person will be on duty during normal operation. Reactor and hoist operation will be limited to technical persons who have been qualified by experience or training. Skilled technicians and electronic specialists will complete the staff.

Although the proposed TSR-II experiments will be performed in the handling pool, the pool will be drained; therefore, all operations must be treated as in-air operations. That is, all persons present must be inside the shielded underground building before any operation begins.

APPENDIX. LIST OF FIGURES

Fig. No.	Title	Page No.
1	The Tower Shielding Facility	2
2	Map of Counties Surrounding Oak Ridge Area	4
3	TSR-II Design (Vertical Section)	5
4	TSR-II Fuel Elements Assembled in a Quarter Sphere	6
5	TSR-II Control Mechanism and Housing	7
6	TSR-II Cooling Water Flow Sheet (Functional Schematic)	10
7	Over-all Suspension Arrangement of TSR-II Cooling Water Hoses and Electrical Cables	13
8	Reactor Platform Suspension Arrangement (TSR-II in Beam Shield)	15
9	Suspension Arrangement for Vertical Scanning	16
10	Tower Suspension Arrangement of Reactor Cooling Water Lines	17
11	Reactivity Worth of the TSR-II Safety Rods as a Function of Their Distance from the Fuel Region	20
12	Reactivity of the TSR-II Fuel Annulus with Different Reflector Materials as a Function of Bulk Water Temperatures (Calculation and Experiment)	20
13	Core Void Coefficient as a Function of the Reactor Radius	22
14	Thermal-Neutron Flux in the TSR-II as a Function of Radius (5-Mw Power Level)	23
15	Source Distribution in the TSR-II Fuel Region as a Function of Radius: Boral Shell 4 cm from the Fuel	24
16	Power Generation in the Fuel Plates of a Central TSR-II Fuel Element as a Function of the Distance from the Inside Edge of the Fuel	25

Fig. No.	Title	Page No.
17	Power Generation in Fuel Plates of an Annular TSR-II Fuel Element as a Function of the Distance from the Horizontal Midplane to the Edge of the Fuel	27
18	Power Generated in Each Fuel Plate of a Central Fuel Element of the TSR-II as a Function of Plate Number	28
19	Power Generated in Each Fuel Plate of an Annular Fuel Element of the TSR-II as a Function of Plate Number	29
20	Gamma-Ray Heat Generation Rates in the Lead Shield of the Proposed TSR-II as a Function of Distance from the Core-Shield Interface	30
21	Exploded Views of TSR-II Control Rod Drive	32
22	Schematic of TSR-II Control Rod Drive in Three Positions	33
23	Simplified Diagram of Shim-Safety System	34
24	Flow-Regulating Solenoid-Controlled Valve	36
25	Block Diagram of TSR-II Primary Safety System	38
26	Test Parameters and Conditions Used for Reactor Safety Study	41
27	Effectiveness of TSR-II Safety System in Limiting Power Excursions for Various Reactor Periods	43
28	Temperature Increase in Annular Fuel Element Region for Various Power Excursions	45
29	Effect on Reactor Power and Temperatures of Reducing the Inlet Water Temperature from $145.8^{\circ}F$ to $32^{\circ}F$ (Temperature Coefficient = -4.28×10^{-5} $\Delta k/k$ per $^{\circ}F$)	46

Fig. No.	Title	Page No.
30	Effect on Reactor Power and Temperatures of Reducing the Inlet Water Temperature from $145.8^{\circ}F$ to $32^{\circ}F$ (Temperature Coefficient = $-6.5 \times 10^{-5} \Delta k/k$ per $^{\circ}F$)	47
31	Effect of Sudden Water Flow Stoppage on Reactor Power and Temperatures	48
32	Experimental Setup for TSR-II Critical Loading	51

INTERNAL DISTRIBUTION

1. A. M. Weinberg
2. J. A. Swartout
3. W. H. Jordan
4. K. Z. Morgan
5-10. J. A. Lane
11. M. J. Skinner
12-13. E. P. Blizard
14. C. W. Angel
15. R. J. Beaver
16. A. D. Callihan
17-20. C. E. Clifford
21. E. P. Epler
22-26. L. B. Holland
27-28. F. C. Maienschein
29-30. Laboratory Records
31. Laboratory Records, ORNL R.C.

EXTERNAL DISTRIBUTION

32-61. H. M. Roth, AEC, Oak Ridge