[redacted]

ORNL MASTER COPY

ORNL-2741
Nuclear Rocket and Ram-Jet Engines
M-3679 (23rd ed.)

AEC RESEARCH AND DEVELOPMENT REPORT

SPECIAL REREVIEW FINAL DETERMINATION
CLASS. AUTH.
REVIEWERS/VERIFIERS CLASS. DATE
(1) [signature] U 6-30-80
(2) [signature] U 7-7-80

INV. 63

INV. 65

INV. 64

INV. 67

REPROCESSING OF ROVER FUEL: LABORATORY DEVELOPMENT PROGRESS TO APRIL 1, 1959

M. J. Bradley
L. M. Ferris

Classification Cancelled
~~Or Changed To~~
By Authority Of OEC-DOC
By S Peterson Date SEP 1971

OAK RIDGE NATIONAL LABORATORY
operated by
UNION CARBIDE CORPORATION
for the
U.S. ATOMIC ENERGY COMMISSION

[redacted]

[redacted]

[redacted] contents in [redacted] to an u[redacted]ibited.

[signature] 6/30/80

LEGAL NOTICE

This report was prepared as an account of Government sponsored work. Neither the United States, nor the Commission, nor any person acting on behalf of the Commission:

A. Makes any warranty or representation, expressed or implied, with respect to the accuracy, completeness, or usefulness of the information contained in this report, or that the use of any information, apparatus, method, or process disclosed in this report may not infringe privately owned rights; or

B. Assumes any liabilities with respect to the use of, or for damages resulting from the use of any information, apparatus, method, or process disclosed in this report.

As used in the above, "person acting on behalf of the Commission" includes any employee or contractor of the Commission, or employee of such contractor, to the extent that such employee or contractor of the Commission, or employee of such contractor prepares, disseminates, or provides access to, any information pursuant to his employment or contract with the Commission, or his employment with such contractor.

[redacted]

[redacted] C-86 ORNL-2741

This document consists of 20 pages.
Copy 24 of 132 copies. Series A.

Contract No. W-7405-eng-26

CHEMICAL TECHNOLOGY DIVISION
Chemical Development Section B

REPROCESSING OF ROVER FUEL: LABORATORY DEVELOPMENT PROGRESS TO APRIL 1, 1959

M. J. Bradley
L. M. Ferris

DATE ISSUED

OCT 19 1959

OAK RIDGE NATIONAL LABORATORY
Oak Ridge, Tennessee
Operated by
UNION CARBIDE CORPORATION
for the
U. S. ATOMIC ENERGY COMMISSION

[redacted]

[redacted]

[redacted]

ABSTRACT

A grind-leach method is presented for the recovery of uranium from prototype Rover fuel, UC_2 dispersed in graphite. From fuel containing 250 mg of uranium per cubic centimeter of fuel (13.9 wt %) ground to -16 mesh, 99.8% of the uranium was leached by refluxing with 15.8 M HNO_3 for 4 hr. Two 6-hr leaches with 15.8 M HNO_3 recovered only 97.0% of the uranium from fuel containing 35 mg of uranium per cubic centimeter (1.96 wt %) ground to -16 +30 mesh, but a maximum of 99.0% was recovered from fuel ground to -200 or -325 mesh. With more dilute acid recoveries were lower. The gaseous reaction products were a mixture of nitrogen oxides. No volatile carbon-containing gas was found. Preliminary data indicated that about 3.2 moles of nitric acid was consumed per mole of metal when oxygen was excluded from the system, suggesting that in the fuel specimens, which had been exposed to the laboratory atmosphere for months, the uranium is present as UO_2.

[redacted]

CONTENTS

		Page
1.0	INTRODUCTION	4
2.0	GRIND-LEACH FLOWSHEET	4
3.0	EXPERIMENTAL WORK	6
	3.1 Leaching of Fuel Containing 1.96 wt % Uranium	6
	3.2 Leaching of Fuel Containing 13.9 wt % Uranium	10
	3.3 Stoichiometry	10
4.0	CONCLUSIONS AND SUGGESTED FUTURE WORK	17
5.0	REFERENCES	17

1.0 INTRODUCTION

Recently obtained information on a "grind-leach" method of recovering uranium from prototype uranium-graphite fuel elements fabricated at Los Alamos for the Rover program is presented. Work reported here was confined to laboratory-scale experiments. Earlier results were published in previous progress reports.[1-3]

The fuel elements for the first Rover test reactor will be UC_2 impregnated in graphite plates, 1/4 in. thick, 7.5 in. long, and 5-8 in. wide.[4] The uranium concentration in the fuel will vary from 40 to 300 mg/cc,[5] i.e., roughly 2-14 wt %; the iron concentration will be about 0.2-0.5 wt %. It is assumed that the fuel elements will not be separated according to uranium concentration before reprocessing. Calculations based on the High Temperature Flat Loading for the KIWI-A core, 250 mg of uranium per cubic centimeter maximum[5] and the variation in plate width[4] indicate that the uranium concentration will average about 190 mg/cc (10.5 wt %).

It has been established[3] that 99.3% of the uranium is leached in 6 hr with boiling 8 M or 16 M HNO_3 from fuel containing 5 to 11 wt % uranium when the fuel is ground to -16 mesh.[3] However, only 98.6% of the uranium was leached from fuel containing 1.96 wt % uranium in 6 hr with 15.8 M HNO_3 when the fuel was ground to -16 mesh.

The effects of particle size, acid concentration, and leaching time on uranium recovery from fuel specimens containing 1.96 wt % U are given together with data on leaching of 13.9 wt % uranium samples with nitric acid. A study of the stoichiometry of the reaction, giving particular attention to the gaseous products, has been initiated.

The authors wish to acknowledge the groups of G. R. Wilson, W. R. Laing, and P. F. Thomason of the ORNL Analytical Chemistry Division for the chemical analyses. Special credit is due A. D. Horton for the gas chromatographic analyses, W. L. Belew for infrared and visible spectrographic gas analyses, and H. Kubota for weak acid determinations.

2.0 GRIND-LEACH FLOWSHEET

A flowsheet based on the grind-leach technique as the primary method for uranium recovery is given in Fig. 1. The flowsheet conditions were calculated for a fuel charge containing 25 kg of uranium at an average concentration of 10.5 wt % before burnup. The average iron concentration was taken as 0.3 wt %. The particle size and acid concentration required for 97% uranium recovery from the lowest loading (35 mg/cc, 1.96 wt %) were taken as the limiting conditions for the entire fuel charge.

With boiling 15.8 M HNO_3, the amounts of uranium that can be recovered in 6 hr from -16 mesh fuel samples containing 5-11 wt % uranium and 13.9 wt % uranium are 99.3 and 99.8%, respectively. Based on laboratory

[redacted]
ORNL-LR-DWG 38764

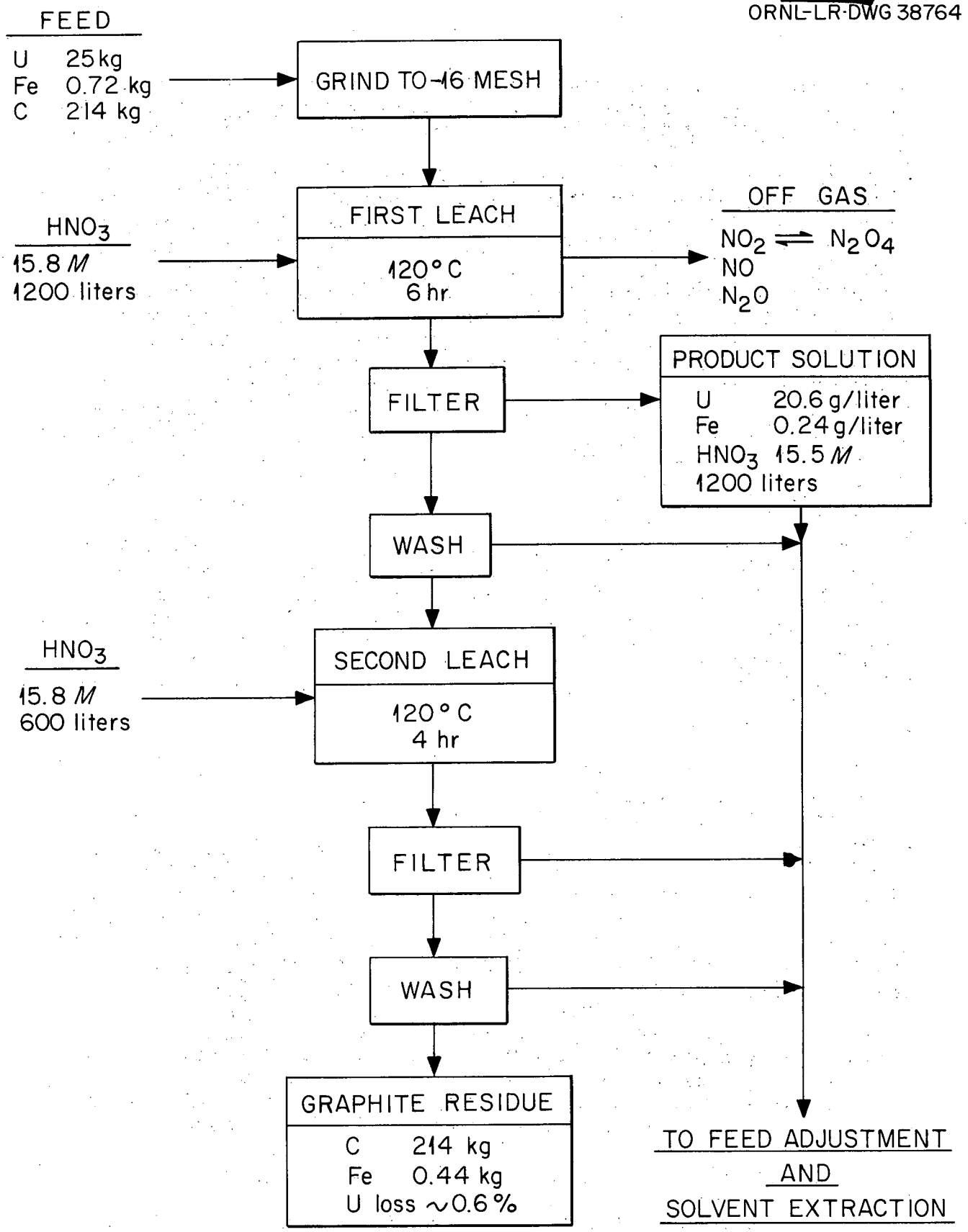

Fig. 1. Flowsheet for recovery of uranium from Rover fuel by grind-leach method.

experiments (Sect. 3.3), about 3.2 moles of nitric acid was consumed per mole of metal (uranium + iron), yielding a mixture of nitrogen oxides as the gaseous products. No volatile carbon-containing gases were found.

In the first step of the process, the fuel is ground, possibly by a wet grinding technique, until it will pass a 16 mesh screen. The ground material is digested with boiling 15.8 M HNO_3 for 6 hr, using an acid volume/fuel weight ratio of 5 liters/kg. The filtered product solution is 15.5 M nitric acid containing 20 g uranium per liter. A suitable solvent extraction feed solution may be obtained by evaporation of excess nitric acid and dilution with water. The distillate may be recycled to the dissolver with only slight concentration adjustment since the nitric acid concentration in the filtered solution, 15.5 M, is close to the azeotropic, 15.8 M. A second leach solubilizes 0.7-2% of the total uranium found in the low concentration, 1.96 wt % uranium, material. Preliminary data indicate that a second leach is beneficial with more highly concentrated fuels. Suitable washing procedures must be included to obtain more than 99% recovery of the uranium, as the weight of solution held by the graphite is 10-20% of the graphite weight.

Calculations based on the High Temperature Flat Loading for KIWI-A, 250 mg of uranium per cubic centimeter maximum,[5] and the variations in plate width[4] indicate that the relative proportions of uranium loadings will be: $<$ 90 mg U/cc, 2.8%; 90-239 mg U/cc, 56.7%; $>$ 239 mg U/cc, 40.4%. The calculated uranium loss to the graphite for such a fuel charge based on experimental U losses for 35, 100, 200, and 250 mg U/cc loadings is $\sim$0.6% under the proposed flowsheet conditions.

3.0 EXPERIMENTAL WORK

3.1 Leaching of Fuel Containing 1.96 wt % Uranium

When the fuel specimens were ground to -200 mesh and digested with two portions of refluxing 15.8 M HNO_3 (1st leach 6 hr, 2nd leach 4 hr) followed by proper washing procedures, 99.0% of the uranium was recovered from the graphite matrix. Yields were lower with more dilute acid or coarser material. Finer grinding had little effect. Repeated extraction with hot 15.8 M HNO_3 in a laboratory model Soxhlet extractor was less effective than two batch treatments with refluxing 15.8 M HNO_3.

Effect of Particle Size. Digestion of fuel specimens ground to -16 +30 mesh with refluxing 15.8 M HNO_3 for 6 hr (5 ml acid/g sample) followed by thorough washing with water and a second 6-hr pass with fresh acid (2.5 ml acid/g sample) resulted in a uranium recovery of 97.0%. Uranium recovery increased gradually to a maximum of 99.0% at -200 mesh (Table 1).

Table 1. Effect of Particle Size on Leaching of 1.96 wt % Uranium in Graphite Fuel with Boiling 15.8 M HNO_3

1st HNO_3 leach, 50 ml acid/10 g sample
2nd HNO_3 leach, 25 ml acid/10 g sample

Run No.	Particle Size, mesh	Reflux Time, hr: 1st Leach	Reflux Time, hr: 2nd Leach	Uranium Recovered, %: 1st HNO_3 Leach + 2 Water Washes	3rd Water Wash	Total Solubilized 1st Leach + 3 Washes	2nd HNO_3 Leach + 1 Water Wash	Graphite Residue	Total Solubilized
1	-16 +30	6	6	95.6	0.86	96.4	0.68	3.0	97.0
2	-30 +50	6	6	95.9	1.09	96.9	0.59	2.5	98.5
14	-100 +140	6	4	97.1	0.09	97.2	0.42	2.35	98.6
13	-200	6	4	98.3	0.14	98.4	0.55	0.98	99.0
16	-325	6	4	98.2	0.05	98.2	0.6	1.2	98.8

Effect of Acid Concentration. Uranium recovery decreased with decreasing nitric acid concentration (Fig. 2, Tables 2 and 3). About 97.0% of the uranium was recovered with 15.8 M HNO_3 from -16 +30 mesh fuel, but only 93% with 4 M. A similar decrease was observed with -30 +50 mesh fuel, with recovery changing from 97.5% with 15.8 M to 94.2% with 4 M. With -200 mesh material only 96.2% of the uranium was recovered with 8 M acid as compared with 99.0% with 15.8 M acid.

Table 2. Effect of Acid Concentration and Leaching Time on Uranium Recovery from 1.96 wt % Uranium-Graphite Fuel, -16 +30 Mesh

1st HNO_3 leach, 50 ml acid to 10 g sample
2nd HNO_3 leach, 25 ml acid to 10 g sample
Boiling nitric acid

Run No.	HNO_3 Conc., M	Reflux Time, hr: 1st Leach	Reflux Time, hr: 2nd Leach	Uranium Recovered, %: 1st HNO_3 Leach + 2 Water Washes	3rd Water Wash	Total Solubilized 1st Leach + 3 Washes	2nd HNO_3 Leach + 1 Water Wash	Graphite Residue	Total Solubilized
1	16	6	6	95.6	0.86	96.4	0.68	3.0	97.0
6	16	4	4	95.7	0.89	96.6	0.78	2.6	97.4
12	16	4	4	95.4	0.21	95.6	0.89	3.5	96.5
5	16	4	40	95.3	0.81	96.1	2.12	1.76	98.2
8	16	2	2	94.2	0.95	95.1	0.89	4.0	96.0
7	12	4	4	92.6	1.06	93.6	0.94	5.4	94.6
9	8	4	4	92.3	1.33	93.6	1.40	5.0	95.0
10	4	4	4	90.7	0.99	91.7	1.64	6.7	93.3

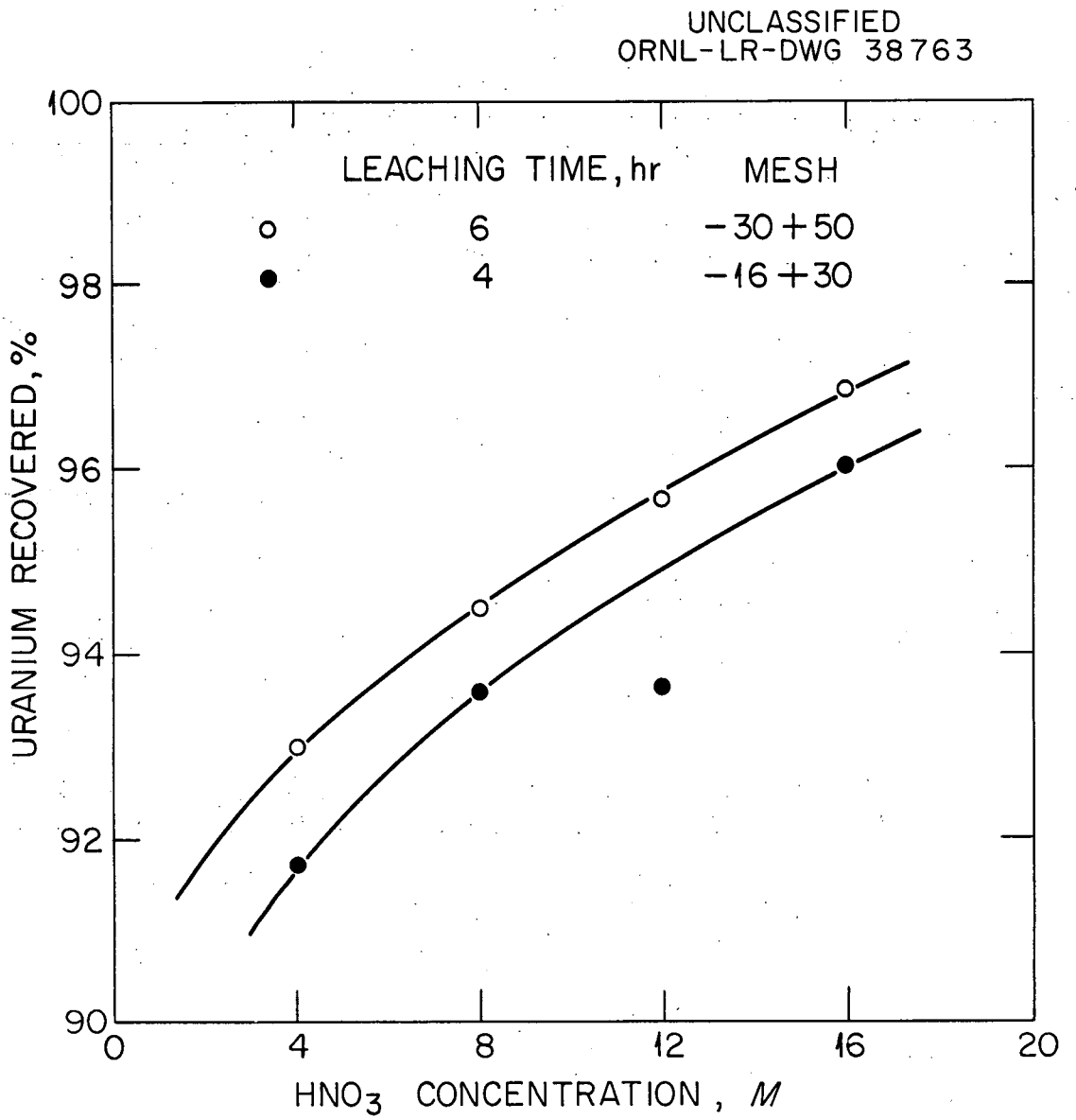

Fig. 2. Effect of nitric acid concentration and particle size on recovery of uranium from 1.96 wt % uranium in graphite fuel. Single leach with boiling nitric acid used in each case.

Table 3. Effect of Acid Concentration on Uranium Recovery from 1.96 wt % Uranium in Graphite, -30 +50 Mesh

1st HNO_3 leach, 50 ml acid/10 g sample
2nd HNO_3 leach, 25 ml acid/10 g sample
6-hr leaches with boiling nitric acid

		Uranium Recovered, %					
Run No.	HNO_3 Conc., M	1st HNO_3 Leach + 2 Water Washes	3rd Water Wash	Total Solubilized 1st Leach + 3 Washes	2nd HNO_3 Leach + 1 Water Wash	Graphite Residue	Total Solubilized
2	16	95.9	1.09	96.9	0.59	2.5	97.5
3	12	94.4	1.34	95.7	0.75	3.5	96.5
4	8	93.7	0.79	94.5	0.84	4.6	95.4
15	4	93.0	0.05	93.0	1.14	5.8	94.2

Effect of Water Washes. Significant amounts of uranium were recovered in the water washes, varying from 1 to 6% in the second wash (Table 4), and often as high as 0.8% in the third (Tables 1-3). The laboratory technique consisted in agitating 10-g samples with 25 ml of water for 15 min and then filtering under a small negative pressure. Variations in the filtration pressure account for some spread in the results. Boiling water offered no advantages over cold water. A fourth wash recovered very little uranium, ~0.01% in the only case studied.

Table 4. Effect of Water Washes on Uranium Recovery

Conditions same as for corresponding run numbers in Tables 1-3

	Uranium Recovered, %		
Run No.	1st HNO_3 Leach + 1 Water Wash	2nd Water Wash	3rd Water Wash
1	91.1	4.48	0.86
2	91.7	4.15	1.09
3	88.4	5.99	1.34
4	90.4	3.31	0.79
5	91.9	3.41	0.81
6	91.9	3.78	0.89
7	87.4	5.18	1.06
8	89.2	4.96	0.95
12	94.0	1.35	0.21

Effect of Reflux Time. One 6-hr leach followed by a second 4-hr leach with fresh acid is recommended for optimum uranium recovery. The data for 2-, 4-, and 6-hr first leaches are all about the same, with a slightly lower yield when only 2 hr was allowed (Table 2). An additional 0.7-0.9%

was obtained with a second leach of 2-6 hr and 2% with a 40-hr second leach. Data on the uranium recovery by the third water wash (Tables 1-3) show that the second nitric acid leach is more effective than additional washing with water.

Soxhlet Extraction with Boiling 15.8 M HNO_3. Because successive leaches increased the uranium recovery, the effect of Soxhlet extraction, in which the material being leached is repeatedly contacted with fresh solvent, was investigated. Soxhlet extraction of -16 +30 mesh specimens with 15.8 M HNO_3 yielded uranium recoveries of 95.8% for 6- and 9-hr cycles and 98.4% for 22-hr cycles, as compared with 97.0% for the batch, two-leach (6-hr) treatment. The lower yields from Soxhlet extraction are probably related to either the lower reaction temperature or absorption of atmospheric moisture by the nitric acid vapors, so that the cycling acid was less than 15.8 M.

3.2 Leaching of Fuel Containing 13.9 wt % Uranium

When the fuel specimens were ground to -16 mesh, 99.84% of the uranium was leached from the graphite matrix by refluxing with 15.8 M HNO_3 for 4 hr (5 ml acid/g sample) followed by thorough washing with water (Table 5). Yields were slightly lower with more dilute acid, i.e., 99.75% with 12 M HNO_3 and 99.70% with 4 M HNO_3. As expected, leaching conditions that were satisfactory for fuel containing less uranium gave good yields with the 13.9 wt % uranium material.

3.3 Stoichiometry

An investigation of the stoichiometry of the reaction of Rover fuel with nitric acid was started. This information will allow the calculation of the acid consumption and the amount of gases evolved during the leaching process. An average of 3.2 moles of HNO_3 was consumed per mole of metal when the leaching was done in a helium atmosphere. Pure UC_2 reacts vigorously with water to yield a complex mixture of hydrocarbons and hydrogen.[6] No references on the reaction of uranium carbides with nitric acid could be found. The only product gases from the reaction of Rover fuel with nitric acid which could be detected by infrared and gas chromatographic analyses were the nitrogen oxides. No carbon-containing gas was found. The preliminary data on the relative amounts of the nitrogen oxides produced, nitric acid consumption, and amount of nitrous acid formed suggest that the uranium is present in the fuel samples as UO_2 rather than UC_2.

Fuel containing 13.9 wt % uranium was selected for this study to obtain a maximum amount of acid consumption and gaseous products at the acid/sample ratio of 5 ml/g.

Acid Consumption. An average of 3.2 moles of HNO_3 (either 12 M or 15.8 M) was consumed per mole of metal when the leaching was done in a helium atmosphere (Table 6). Errors other than in pipetting ($\pm$ 0.05 ml, i.e., $\pm$ 0.8 millimole of total acid) will result in loss of nitric acid from the system, so that the amount of acid consumed, as determined by difference, will tend to be larger than the true value.

Table 5. Effect of Nitric Acid Concentration on Leaching of 13.9 wt % Uranium Graphite Fuel, -16 Mesh

1st HNO_3 Leach, 50 ml acid/10 g sample; 2nd HNO_3 Leach, 25 ml acid/10 g sample

Run No.	HNO_3 Conc., M	Reflux Time, hr		Uranium Recovered, %					Iron Recovered, %	
		1st Leach	2nd Leach	1st HNO_3 Leach + 2 Water Washes	3rd Water Wash	Total Solubilized 1st Leach + 3 Washes	2nd HNO_3 Leach + 1 Water Wash	Graphite Residue	1st HNO_3 Leach + 3 Washes	Graphite Residue
1	16	3.5	4	99.47	-	99.47[a]	0.43	0.10	47.0	53.0
7	16	4	-	99.78	0.07	99.85	-	0.13	43.0	57.0
8	16	4	-	99.78	0.09	99.87	-	0.14	40.2	59.8
11	16	4	-	99.64[b]	0.18	99.82[b]	-	0.18[b]	39.4	60.6
12	16	4	-	99.69[b]	0.13	99.82[b]	-	0.18[b]	37.4	62.6
2	12	4	4	98.83	-	98.83[a]	1.03	0.14	42.8	57.2
4	12	5	-	99.71	0.12	99.83	-	0.15	46.7	53.3
5	12	5	-	99.20	0.51	99.71	-	0.26	46.7	53.3
6	12	6	-	99.50	0.13	99.63	-	0.35	49.3	50.6
3	4	4	3	98.96	-	98.96[a]	0.71	0.33	59.2	40.8
9	4	4	-	99.49	0.23	99.72	-	0.30	59.8	40.2
10	4	4	-	99.42	0.34	99.76	-	0.27	60.2	39.4

a. two water washes

b. 25 ml acid to 10 g sample

Table 6. Acid Consumed in Leaching 13.9 wt % Uranium-Graphite Fuel, -16 mesh, with Nitric Acid in a Helium Atmosphere

Run No.	HNO_3 Conc., M	Acid, mmoles: HNO_3 Added	Acid, mmoles: Left after Reaction	Acid, mmoles: Weaker Acid	Acid, mmoles: HNO_3 Used	U Solubilized, mmoles	Fe Solubilized, mmoles	Moles HNO_3 Used Per mole Metal
7	16	777.8	759.7	3.40	21.5	5.82	0.338	3.49
8	16	777.8	759.7	2.80	20.9	5.78	0.346	3.41
11	16	395.2	373.0	0	22.2	5.75	0.340	3.64
12	16	397.7	381.5	0	16.2	5.83	0.324	2.63
4	12	602.4	590.4	2.20	14.2	5.76	0.372	2.31
5	12	602.4	584.9	2.25	19.7	5.79	0.394	3.18
6	12	602.4	583.1	2.27	21.6	5.81	0.397	3.49
								3.2 avg

Table 7. Gas Chromatographic Analysis for NO and N_2O

Sample size: 10.8 ml

Run No.	HNO_3 Conc., M	NO, ml	N_2O, ml	NO/N_2O
12	16	2.0	1.7	1.17
6	12	1.9	1.5	1.27
9	4	2.3	1.4	1.64
10	4	3.2	1.8	1.78

In some solutions a weaker acid than nitric was found, which could be differentially titrated in acetone after removal of the uranium by ion exchange. Present indications are that it is nitrous acid, although positive identification has not been made. The equilibria

$$HNO_3 + HNO_2 \rightleftharpoons N_2O_4 + H_2O \rightleftharpoons 2\ NO_2 + H_2O$$

are known.[7] The nitrous acid concentration is thus directly dependent on the concentration of the gases N_2O_4 and NO_2 and inversely dependent on the nitric acid concentration. Vacuum filtration, which removes the N_2O_4 and NO_2 from the system, will shift this equilibrium, removing nitrous acid from the solution. Variations in filtering technique would cause variations in the nitrous acid concentration such as were observed experimentally.

Gaseous Products. In a series of experiments covering the acid range 4-15.8 M HNO_3, the only gases detected by infrared and gas chromatographic analyses were the nitrogen oxides NO_2, NO, and N_2O. No peaks were observed for hydrocarbons, CO, or CO_2, and there were no unidentified peaks by either method. Infrared analysis is quite sensitive to the C-H bond in organic materials, and the gas chromatograph is moderately sensitive for CO and CO_2. Duplicate runs with a given acid concentration gave identical infrared spectra. The infrared spectra of the gases evolved when 15.8 and 12 M HNO_3 were used in leaching were almost identical, while with 4 M HNO_3 the spectra showed more NO and less NO_2, as would be expected. It seems safe to conclude that the gaseous products of the reaction were only a mixture of nitrogen oxides, and that there was no volatile carbon compound in the gas phase.

The gas chromatograph is a recent development which has been very useful for the quantitative analysis of gas mixtures but has not been applied specifically to nitrogen oxide mixtures of this type. Good calibration curves were obtained with standard amounts of NO and N_2O, but with the present experimental arrangement NO_2 peaks tended to smear and were not reproducible. Since the amount of helium diluent is unknown, NO_2 cannot be determined by difference. The NO/N_2O volume ratio varies from 1.2 with 12 M or 15.8 M acid to 1.8 with 4 M (Table 7).

Two independent determinations of NO_2 by visible spectra gave an approximate value of 10.4 vol % when 15.8 M HNO_3 was used. The equilibrium amount of the dimer, N_2O_4, present at this temperature and partial pressure of NO_2 is 5.5% (based on $K_{dissociation} = 0.1426 - 9.7588 \times C$, where C = moles of N_2O_4 per liter if there were no dissociation of N_2O_4).[8] A rough estimate of the relative proportions of the nitrogen oxides in the gas product at 25°C, a total pressure of 1 atm, and a partial pressure of NO_2 of 0.10 atm is: 1.9 NO_2/3.4 NO/2.9 N_2O/1.0 N_2O_4. If it is assumed that the N_2O_4 is completely dissociated for purposes of considering the relative mole quantities of gases in the various oxidation states, then the ratios are 1.4 NO_2/1.2 NO/1.0 N_2O.

Ten grams of sample was placed in the 250-ml flask and the flask attached to the apparatus shown in Fig. 3. The entire system was flushed

UNCLASSIFIED
ORNL-LR-DWG 38762

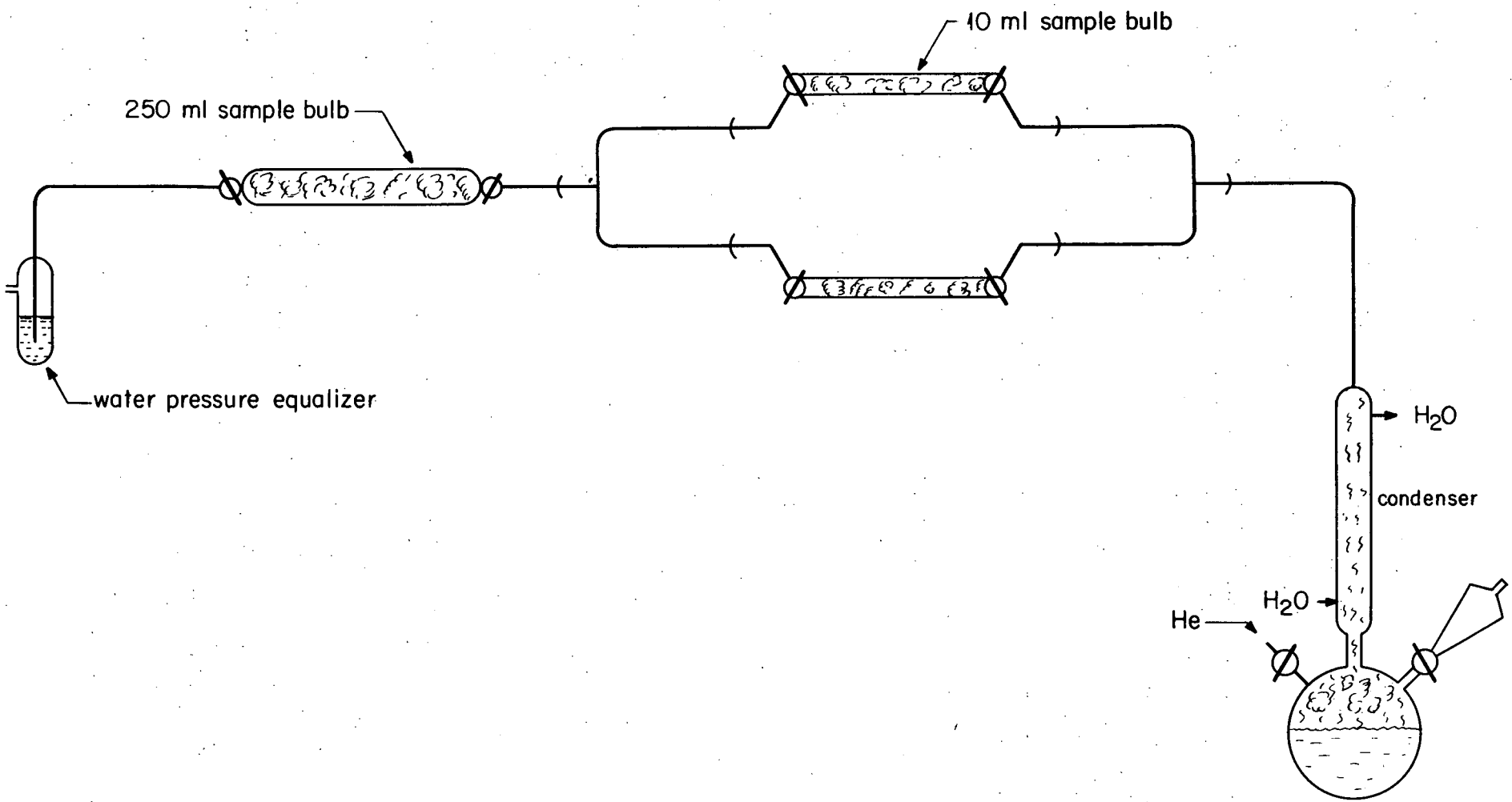

Fig. 3. Gas sampling apparatus.

with helium for 1 hr to remove the oxygen, which would react with any NO that might be formed in the reaction. After the system was thoroughly flushed, nitric acid was introduced through the separatory funnel and the mixture refluxed. Two 10.8-ml gas samples were collected for gas chromatographic analysis on a silica gel column, and one 250-ml sample for either infrared or visible spectrum analysis.

Reaction Equations. Oxidation-reduction reactions involving nitric acid are among the most complicated known because of the large number of nitrogen oxides that may be produced and the various equilibria among these gases, water, HNO_3, HNO_2, and atmospheric oxygen. The following experiments were all performed in a helium atmosphere to eliminate one of the many variables. An additional complexity is introduced in that the chemical form of the uranium and iron in the Rover fuel specimens is not certain. The fuel was initially UC_2 in graphite, but there is no real evidence that fuel specimens that have been standing in air for one year still contain carbide. No data on the reaction of pure UC_2 or UC with nitric acid are available for comparison.

It was established experimentally that UO_2^{2+} and Fe^{3+} are the metal ion products of the reaction. The gas phase consists entirely of nitrogen oxides. The original uranium compound is probably an oxide rather than a carbide, since no carbon compound appeared in the gas phase and nonvolatile carbon compounds such as acetic acid, which are stable in refluxing 15.8 M HNO_3, if present in the solution at all, were in such low concentration that they could not be identified. Further work will be required to study the gases evolved from UC_2 since the presence of acetylene, CO, or similar gases could be dangerous in the dissolver system.

A very rough check of this speculation may be made with the preliminary data now available (Table 6). Consider the half reactions

	meq oxidized/ 10 g sample of fuel containing 13.9% U
$UO_2 \longrightarrow UO_2^{2+}$	11.6
$Fe \longrightarrow Fe^{3+}$	1.0
Total meq oxidized	12.6

Then the total milliequivalents of metal oxidized would be 12.6 if these were the correct half reactions. This oxidizing power is supplied by a series of nitric acid half reactions (Table 8).

From the known ratios of the amounts of the dissociated gases (1.4 NO_2/1.2 NO/1.0 N_2O) and the total amount of HNO_2 (assuming it was the weaker acid), it can readily be shown that the milliequivalents of nitric acid that were reduced is equal to 13.0 z + 2 x mmoles of HNO_2. The unknown z is a constant relating the experimentally determined ratio of the gas to the total amount of that gas produced in the reaction.

Table 8. Oxidation-Reduction Half Reactions of Nitric Acid

HNO_3 Consumed, meq/mmole of Nitrogen Product	Reaction	Change in Oxidation Number per Mole of Nitrogen Product	HNO_3 Reduced, meq/mmoles of Nitrogen Product
2.8 z	$2\ H^+ + NO_3^- \rightarrow NO_2 + H_2O$	1	1.4 z
3 x mmoles HNO_2	$3\ H^+ + NO_3^- \rightarrow HNO_2 + H_2O$	2	2 x mmoles HNO_2
4.8 z	$4\ H^+ + NO_3^- \rightarrow NO + 2\ H_2O$	3	3.6 z
10 z	$10\ H^+ + 2\ NO_3^- \rightarrow N_2O + 5\ H_2O$	8	8 z
Total 17.6 z + 3 x mmoles HNO_2			13.0 z + 2 x mmoles HNO_2

Because the total volume of gas produced is not known, it is necessary to calculate z from the acid consumption. It is shown in Table 8 that the millimoles of acid consumed is equal to 17.6 z + 3 x mmoles HNO_2. These calculations have been carried out in Table 9. An average of 14.0 meq of HNO_3 was reduced as compared with the oxidation of 12.6 meq of metal, for

Table 9. Milliquivalents of Nitric Acid Reduced when 5.8 mmoles of Uranium in Graphite is Oxidized

$$z = \frac{\text{mmoles of } HNO_3 \text{ used} - 3 \times \text{mmoles } HNO_2 \text{ produced}}{17.6}$$

meq of HNO_3 reduced = 13.0 z + 2 x mmoles HNO_2 produced

Run No.	HNO_3 Conc., M	HNO_3 Used, mmoles	HNO_2 Produced, mmoles	z	HNO_3 Reduced, meq
7	16	21.5	3.40	0.642	15.2
8	16	20.9	2.80	0.710	14.8
11	16	22.2	0	1.26	16.4
12	16	16.2	0	0.920	12.0
4	12	14.2	2.20	0.432	10.0
5	12	19.7	2.26	0.739	14.0
6	12	21.6	2.27	0.841	15.5
					14.0 avg.

an error of 11%. These quantitative data on gas analysis are preliminary, and a small error in experimental technique could easily introduce a 5% error in the total milliequivalents of reducing power. This discussion is therefore of qualitative value only. Nevertheless, it may be concluded that the data accumulated thus far are reasonably consistent with the

behavior expected from UO_2 in graphite. If the starting material was UC_2 in graphite, 23.2 meq of oxidizing power would be required to oxidize 5.8 mmoles of $U^{2+} \longrightarrow UO_2^{2+}$.

4.0 CONCLUSIONS AND SUGGESTED FUTURE WORK

If the actual fuel loading distribution of KIWI-A is about that described in the LASL Report,[5] the laboratory experiments over the range 1.96-13.9 wt % uranium indicate that uranium losses to the graphite for the unirradiated fuel will be ~0.6% with one 6-hr leach with 15.8 M HNO_3 and suitable washes when the fuel is ground to -16 mesh. Coarser material results in lower uranium recoveries. The same is also true with more dilute acid, although the effect is less pronounced. The effect of a second nitric acid leach on loadings higher than 1.96 wt % uranium per cubic centimeter should be studied since the second leach increases the recovery from low concentration material by 1%.

Further work will be required to determine the stoichiometry of the reaction. Quantitative data on the composition of the product gases and the total amount of gases produced is needed so that a more exact determination of the milliequivalents of nitric acid reduced may be made. Additional information on the acid consumption is desirable.

Explosive mixtures are formed by hydrogen and acetylene, which are major hydrolysis products of uranium dicarbide.[6] Therefore it is very important to determine what uranium compound is present in the fuel specimens, and also the rate of reaction of the pure carbides with moist air, water, and nitric acid. Fundamental studies of the reaction of pure UC_2 and UC with air, water, and nitric acid are needed to answer these questions.

Ultimately, laboratory scale testing with radioactive fuel of the most attractive flowsheet is planned.

5.0 REFERENCES

1. L. M. Ferris and A. Fitch, Jr., "A Survey of Reprocessing Methods for Rover-Pluto Fuels," ORNL-CF-58-1-98 (Jan. 13, 1958).

2. A. Fitch, Jr., "Reprocessing of Rover and Pluto Fuels: Interim Progress Report," ORNL-2514 (May 2, 1958).

3. A. Fitch, Jr., and L. M. Ferris, "A Tentative Grind-Leach Process for Rover Fuels," ORNL-2640 (Dec. 26, 1958).

4. H. M. Roth, AEC private communication to J. A. Swartout, June 11, 1958.

5. R. D. Krohn and L. M. Redman, editors, "Quarterly Status Report of LASL Rover Program for period ending March 20, 1958," LAMS-2217, Vol. I, p. 138.

6. L. M. Litz, "Uranium Carbides: Their Preparation, Structure, and Hydrolysis," NP-1453 (1948).

7. K. Vetter, Z. anorg. Chem., 260: 242 (1949).

8. F. H. Verhoek and F. Daniels, J. Am. Chem. Soc., 53: 1250 (1931).

Notebook References

Bradley, M. J., ORNL Notebook Number 5872, pp. 13-46, 78-100.

Bradley, M. J., ORNL Notebook Number 5902, pp. 2-20.

Experimental work was completed March 19, 1959.

ORNL-2741
Nuclear Rocket and Ram-Jet Engines
M-3679 (23rd ed.)

INTERNAL DISTRIBUTION

1. R. E. Blanco
2. F. F. Blankenship
3. E. P. Blizard
4. M. J. Bradley
5. F. R. Bruce
6. R. A. Charpie
7. F. L. Culler
8-9. L. M. Ferris
10. A. P. Fraas
11. J. H. Frye, Jr.
12. H. E. Goeller
13. B. L. Greenstreet
14. W. R. Grimes
15. H. W. Hoffman
16. W. H. Jordan
17. C. P. Keim
18. W. D. Manly
19. R. F. Newton
20. M. J. Skinner
21. J. A. Swartout
22. A. M. Weinberg
23. E. P. Wigner (consultant)
24. Laboratory Records, ORNL R.C.

EXTERNAL DISTRIBUTION

25. Air Command and Staff College
26. AFPR, North American, Downey
27. Air Force Special Weapons Center
28. Air Research and Development Command (RDRAP)
29. Air Research and Development Command (RDZN)
30. Air Technical Intelligence Center
31. Albuquerque Operations Office
32. Argonne National Laboratory
33. Armed Forces Special Weapons Project, Sandia
34. Armed Forces Special Weapons Project, Washington
35-36. Army Ballistic Missile Agency
37. Assistant Secretary of Defense, R&D (WSEG)
38-41. Atomic Energy Commission, Washington
42. Atomic International
43. Battelle Memorial Institute
44. Brookhaven National Laboratory
45. Bureau of Aeronautics
46. BAR, Chance Vought, Dallas
47. Bureau of Ordnance
48-49. Bureau of Ordance (AD-1B)
50. Bureau of Ships
51. Chicago Operations Office
52. duPont Company, Aiken
53. General Electric Company (ANPD)
54-55. General Electric Company, Richland
56. Lockland Aircraft Reactors Operations Office
57-60. Los Alamos Scientific Laboratory (1 copy each to R. D. Baker and R. J. Bard)
61. Marquardt Aircraft Company
62-63. National Aeronautics and Space Administration, Cleveland
64-65. National Aeronautics and Space Administration, Washington

66. New York Operations Office
67. Oak Ridge Operations Office
68. Office of Naval Research
69. Office of the Assistant for Operations Analysis DCS/O
70. Office of the Chief of Naval Operations
71. Patent Branch, Washington
72. Phillips Petroleum Company (NRTS)
73. Pratt and Whitney Aircraft Division
74. San Francisco Operations Office
75. School of Aviation Medicine
76-77. USAF Project RAND
78. U.S. Naval Postgraduate School
79-81. University of California, Livermore (1 copy to A. J. Rothman)
82-87. Wright Air Development Center
88-132. Technical Information Service Extension