OAK RIDGE NATIONAL LABORATORY LIBRARY
3 4456 0023339 8

CENTRAL RESEARCH LIBRARY
DOCUMENT COLLECTION

ORNL-2877
UC-37 Instruments

# LARGE AREA GERMANIUM SURFACE-BARRIER COUNTERS

F. J. Walter
J. W. T. Dabbs
L. D. Roberts

CENTRAL RESEARCH LIBRARY
DOCUMENT COLLECTION
LIBRARY LOAN COPY
DO NOT TRANSFER TO ANOTHER PERSON
If you wish someone else to see this document, send in name with document and the library will arrange a loan.

OAK RIDGE NATIONAL LABORATORY
operated by
UNION CARBIDE CORPORATION
for the
U.S. ATOMIC ENERGY COMMISSION

LEGAL NOTICE

This report was prepared as an account of Government sponsored work. Neither the United States, nor the Commission, nor any person acting on behalf of the Commission:

A. Makes any warranty or representation, expressed or implied, with respect to the accuracy, completeness, or usefulness of the information contained in this report, or that the use of any information, apparatus, method, or process disclosed in this report may not infringe privately owned rights; or

B. Assumes any liabilities with respect to the use of, or for damages resulting from the use of any information, apparatus, method, or process disclosed in this report.

As used in the above, "person acting on behalf of the Commission" includes any employee or contractor of the Commission, or employee of such contractor, to the extent that such employee or contractor of the Commission, or employee of such contractor prepares, disseminates, or provides access to, any information pursuant to his employment or contract with the Commission, or his employment with such contractor.

ORNL-2877

Contract No. W-7405-eng-26

PHYSICS DIVISION

# LARGE AREA GERMANIUM SURFACE-BARRIER COUNTERS

F. J. Walter
J. W. T. Dabbs
L. D. Roberts

DATE ISSUED

FEB 8 1960

OAK RIDGE NATIONAL LABORATORY
Oak Ridge, Tennessee
operated by
UNION CARBIDE CORPORATION
for the
U.S. ATOMIC ENERGY COMMISSION

OAK RIDGE NATIONAL LABORATORY LIBRARY
3 4456 0023339 8

# Large Area Gemanium Surface-Barrier Counters*

F. J. Walter, J. W. T. Dabbs and L. D. Roberts
Oak Ridge National Laboratory
Oak Ridge, Tennessee

ABSTRACT

A description is given of a solid state counter of good resolution, long term stability, and fast rise time which is suitable for heavy charged particles, for example, alpha particles and fission fragments. A simple theoretical model for the counter behavior is presented which is found to describe the observed behavior of the counter very well. The importance of germanium purity in connection with pulse height, rise time, and counter area is discussed. Counters with sensitive areas up to 5 $cm^2$ have been successfully used.

---

*A preliminary account of this work may be found in F. J. Walter, J. W. T. Dabbs, and L. D. Roberts, Bull. A.P.S., Series II, 3, 181 (1958) and in Oak Ridge National Laboratory report CF-58-11-99 (unpublished).

# I. INTRODUCTION

When a charged particle, e.g., an alpha particle, enters germanium, it produces free electrons and holes at an average rate of one electron-hole pair for each $2.94 \pm 0.15$ eV of energy lost[1]. If these free carriers are created in a region where an electric field exists, they will drift in the field and may induce charges on nearby electrodes.

McKay[2] first used these phenomena to detect alpha-particles in the neighborhood of a p-n junction in germanium. Mayer and Gossick[3] applied these ideas in a counter using a surface barrier: this arrangement is almost ideal for detecting heavily ionizing charged particles, since it can provide a large sensitive area, over which the electric field may be made reasonably uniform and normal to the surface.

Figure 1 shows a charged particle counter of the type in which a region of high electric field is adjacent to the front surface, which has an ungrounded electrode attached there to the germanium. When a charged particle passes through this surface into the germanium, the size of the voltage pulse resulting from the induced charge will depend on the total number of free charge carriers (electrons and holes) created, the capacitance of the counter and external circuits, and the losses associated with trapping and recombination. The speed with which the counter responds to an ionizing event is determined by the time required for the charge carriers to traverse the voltage gradient, provided the range of the charged particle is less than the depth of the region of significant gradient. The large electric field and short collection distances associated with surface barriers, together with high carrier mobilities, give these devices very short

pulse rise times. The absence of large trapping or recombination effects tends to give good proportionality between particle energy and pulse height provided the range of the radiation is less than the depth of the region of significant electric field. The pulse rise time is lengthened and the energy proportionality may be impaired if the range is such that some of the carriers must diffuse to the region of high field[4].

We have used counters of this type for several years for the detection of alpha particles and fission fragments in connection with low temperature nuclear alignment experiments[5]. In this paper we discuss this extension of the work of Mayer and Gossick to the detection of alpha-particles and fission fragments at low temperatures. We first present a simple theoretical model for the counter, and then compare its predictions with the experimentally observed characteristics.

## II. THEORETICAL MODEL

In order to understand the characteristics of the germanium counter, with regard to pulse height, rise time, and linearity of pulse height with energy, it is necessary to know the electrical potential distribution in the crystal and the resulting effective (small signal) capacitance of the device.

For our work with high purity germanium two limiting cases of the potential distribution are of interest. They correspond to (1) very low resistivity in the bulk material at higher temperatures ($\sim 77^{\circ}K$) and (2) very high resistivity at the temperatures of liquid helium and below.

Important surface states on n-type germanium have been found under a number of surface conditions[6]. These states are able to trap electrons from

the crystal until the Fermi level in the surface is equalized with the Fermi level in the interior. This leaves the crystal with a positive space charge and also warps the band structure near the surface. The resulting high density of charge on the surface and relatively low density of charge in the interior produces an asymmetric potential distribution which is called a surface barrier. The charge distribution and potential gradients in the interior of the crystal can be calculated* from Poisson's equation and the Fermi-Dirac distribution of charge carriers. At the temperatures and impurity concentrations of interest here, the solution of Poisson's equation yields the well known equations for an abrupt junction which may be written

$$x = (2K\mathcal{E}_o)^{1/2} (qN)^{-1/2} \left[ (-\psi_o)^{1/2} - (-\psi)^{1/2} \right] \tag{1}$$

$$\lambda_o = (2K\mathcal{E}_o)^{1/2} (qN)^{-1/2} (-\psi_o)^{1/2} \tag{2}$$

$$-E(x) = (\partial\psi/\partial x)_x = (qN) (K\mathcal{E}_o)^{-1} (\lambda_o - x) \tag{3}$$

where $N \equiv N_d - N_a$, $N_d$ is the density of donor centers, $N_a$ is the density of acceptor centers, q is the magnitude of the electronic charge, $\psi$ is the electrostatic potential, x is the normal distance from the surface of the crystal, K is the dielectric constant, $\mathcal{E}_o$ is the permittivity of free space, $\psi_o$ equals the value of $\psi$ at the surface (the barrier height), and $\lambda_o$ equals the value of x at which $\psi$ becomes zero (the barrier depth).

---

* An excellent summary of calculations of this type may be found in H. K. Henisch, Rectifying Semi-Conductor Contacts (The Clarendon Press, Oxford, 1957).

The barrier height ($\psi_o$) is the only temperature dependent term in the equations for the potential. A variation of $\psi_o$ with temperature can be caused by the variation of the Fermi level with temperature. The magnitude of $\psi_o$ depends on the energy location and density of surface states and on the location of the Fermi level in the crystal. In the very pure n-type crystals under consideration here, the location of the Fermi level energy ranges from within kT of the center of the forbidden band gap (at 300°K) to very near the donor energy level (at 4°K). The maximum value of $-q\psi_o$ cannot exceed a few times kT less than the difference between the Fermi level and valence band energies.

When an external potential bias ($\psi_a$) is placed across the crystal, the potential distribution changes since the original conditions for equilibrium and neutrality are no longer valid. Where the electrical resistivity of the bulk crystal is small, it can be assumed that essentially all of the applied potential difference occurs across the barrier region. In this case, neglecting the effects of current flow in the barrier region, the potential distribution, barrier depth, and electric field in the crystal may be obtained by replacing $\psi_o$ by $\psi_T = \psi_o + \psi_a$ and $\lambda_o$ by $\lambda$ in the preceding equations.

Equations (1), (2), and (3) characterize a typical Schottky barrier[7] whose dynamic capacitance per unit area (C) is given by

$$\frac{1}{C^2} = 2(-\psi_T)/qNK\varepsilon_o \tag{4}$$

or

$$1/C^2 = 1.41 \times 10^8 \, (-\psi_T)/KN \tag{4a}$$

if C is in $\mu f/cm^2$ and $\Psi_T$ is in volts.

The size of the voltage pulse induced across the counter by an ionizing particle with energy W and range R $(R<\lambda)$ is given by

$$V = \frac{qW}{CA + C_x} \frac{\eta}{\epsilon} \tag{5}$$

where $C_x$ is the shunt capacitance in external circuits, A is the counter area, $\epsilon$ is the average energy required to create a free electron hole pair in germanium and $\eta$ is the apparent efficiency of charge collection. The quantity $\eta$ includes all mechanisms for charge carrier loss.

If the capacitance of the counter is large compared to $C_x$, Eq. (5) becomes

$$V = \left(\frac{2q}{K\mathcal{E}_o}\right)^{1/2} \left(\frac{-\Psi_T}{N}\right)^{1/2} \frac{W}{A} \frac{\eta}{\epsilon}. \tag{6}$$

Two important observations may now be made. From Eq. (6) we note that if one wishes to have a large detector with a large output signal, the germanium should be as pure as possible. To the extent that $\eta/\epsilon$ is independent of the nature of the ionizing particle and its energy, the pulse height V will be proportional to the energy W. It can be seen from the expression for barrier thickness (Eq. (2) ) that if $\lambda$ is to exceed the range of a 5 Mev alpha particle ($\sim 17\mu$) with less than ten volts applied bias, N must be $< 6. \times 10^{13}$ .

The rise time of the voltage pulse may be estimated from the mobilities of the charge carriers and the potential distribution. Using the simplified model of Eqs. (1), (2), and (3), the time required for a charge carrier to move within the barrier from position $x_1$ to position $x_2$ is found to be

$$t = \frac{K\mathcal{E}_o}{qN\mu} \ln\left(\frac{\lambda - x_1}{\lambda - x_2}\right), \qquad x_1 < x_2 . \tag{7}$$

Alternatively the time required may be expressed in terms of the potentials as

$$t = 2K\mathcal{E}_o(qN\mu)^{-1} \ln(\Psi_1/\Psi_2), \qquad \Psi_1 > \Psi_2 . \tag{8}$$

Here $\mu$ is the average mobility of the carrier and it is assumed that the electric fields are small enough that the variation of mobility with field can be ignored. Equations (7) and (8) diverge for the case where the limits include $x = \lambda$ or $\Psi = 0$. This divergence is not real, because the potential gradient in the real crystal never reaches zero, although it may become quite small. For carriers which might be produced deep within the crystal ($x > \lambda$), diffusion processes also become important[4]. For purposes of comparison with experiment, the time required to traverse $0.9\ \Psi_T$ is a suitable quantity.

In order to examine the effect of sample purity on rise time, let us consider an ionizing particle with a range $R = 1.7 \times 10^{-3}$ cm entering a counter in which $N = 10^{12}$ cm$^{-3}$ (typical of the counters studied here). If $\Psi_T$ is 5.5 volts, $\lambda$ is $10^{-2}$ cm., and the maximum value of the electric field is approximately $10^3$ volts/cm. At 77°K, the average mobility of the holes is about $2 \times 10^4$ cm$^2$/volt sec. and the longest distance any hole must travel is R. From Eq. (7), the time required for all the holes to traverse this distance is $\approx 7 \times 10^{-11}$ sec. If we use an average electron mobility of $1.5 \times 10^4$ cm$^2$/volt sec, the time required for an electron to traverse $0.9\ \Psi_T$ is $\approx 3 \times 10^{-9}$ sec. The large difference between the traversal times for electrons and holes is a result of the particular example chosen since these times are very dependent upon the barrier depth. This can be

seen by rewriting Eq. (8) in terms of the barrier depth and applied bias to obtain

$$t = \lambda^2(\psi_T \mu)^{-1} \ln(\psi_1/\psi_2) \qquad \lambda > R. \qquad (8a)$$

Eq. (8a) suggests that the minimum pulse rise time associated with these traversal times would occur when the barrier depth is slightly greater than the range of the ionizing particle. The example above may be altered to give this condition if N is increased to about $3 \times 10^{13}$ $cm^{-3}$. The traversal times then become comparable and are about $10^{-10}$ sec. It is clear that decreasing the rise time by increasing N reduces the pulse height.

It should be noted that although the model described by Eqs. (1) through (4) may be quite adequate for predicting the effective capacitance, it should not necessarily be expected to give a very accurate estimate of the pulse rise time since we have neglected diffusion and the perturbation of the electric field by the free charge carriers.

At very low temperatures, where the resistivity of the bulk material is very large, Eqs. (1), (2), and (3) remain good approximations in the absence of applied potential bias. However, when a bias is applied, the assumption that $\psi_o$ may simply be replaced by $\psi_T$ in these equations is no longer valid, since it cannot be assumed that significant electric fields do not exist outside the barrier region. Thus as the temperature is lowered the total potential difference may be shared in some manner between the barrier region and the remainder of the crystal. An upper limit on the potential gradient in the bulk material is assumed to be set by the breakdown field, which is about 10 volts/cm in rather pure n-type germanium at very low temperatures[8]. When significant fields exist in the bulk

material, the counter behavior may approach that of a conduction counter, that is, the counter becomes sensitive to radiation throughout its volume, and its effective capacitance approaches that determined by its overall dimensions and dielectric constant. If C in Eq. (5) is replaced by this new capacitance, one can then claculate the approximate pulse height.

It is difficult to make an estimate of the pulse rise times for this case, since the sharing of the potential distribution between the barrier region and the bulk region is unknown. However, for counters many times thicker than the barrier region, the rise time at liquid helium temperatures may in general be expected to be significantly longer than at 77°K. In the limit of an approximately uniform field throughout the bulk region, the minimum traversal time for the electrons may be estimated from

$$t \approx d/(\mu E_c) \tag{9}$$

where d is the crystal thickness and $E_c$ is the breakdown field. Assuming $\mu_e E_c = 1.3 \times 10^6$ cm/sec[8] for rather pure Ge at helium temperatures we obtain $t \approx 7 \times 10^{-7}$ sec/cm.

The behavior of the counter in both temperature regions can be discussed in terms of a simplified equivalent circuit. In Fig. 2, all external circuits including means for applying the potential bias, are to be considered as connected to points 1 and 2. $R_1$ and $C_1$ represent the effective resistance and capacitance

associated with the barrier region. Similarly, $R_2$ and $C_2$ represent these quantities for the remainder of the crystal. $C_x$ represents the total stray capacitance in external circuits.

When an ionizing event produces free charge carriers in the crystal, the drift of the carriers in the electric field induces charges at the terminals 1 and 2.

At higher temperatures, $R_1$ is very large, $R_2$ is essentially zero, $C_1$ is the C of Eq. (4) times the counter area, and Eqs. (5) and (6) describe the maximum of the voltage pulse.

When the resistivity of germanium is very large, there can be a significant potential gradient throughout the crystal associated with an applied bias and the steady state current flow. In this case the charge carriers may be separated across the total thickness of the crystal and the correct capacitance (CA) for use in Eq. (5) approaches $CA = C_1C_2/(C_1 + C_2)$.

In the absence of applied bias, Eqs. (1), (2), and (3) predict that at any temperature a significant surface barrier should exist provided $-q\psi_0 > kT$. Consequently, one would expect the counters to detect ionizing events even under this circumstance. However, it should be pointed out that when no external bias is applied, the charge carriers will traverse only the barrier region during the time intervals of interest, regardless of the resistivity of the bulk material. At very low temperatures where the resistivity of the germanium[8] is very large, the absence of significant potential gradients in the bulk material may be represented by a large value for $R_2$. If it is assumed that this $R_2$ is essentially infinite compared to the impedance of $C_2$, the pulse height at zero external bias

at very low temperatures is given by

$$V = \frac{qWC_2}{C_1C_x + C_1C_2 + C_2C_x} \frac{\eta}{\epsilon} . \tag{10}$$

## III. DESCRIPTION OF COUNTER

The counters used in this study were made from high-purity ($N = 10^{12}$ to $3 \times 10^{13}$ $cm^{-3}$) single crystal n-type germanium. The active elements of the counters consisted of plates cut from a germanium crystal with a diamond saw. The plates were prepared by lapping and etching in CP4.* The electrodes were applied by vacuum evaporation of a thin (200 to 2000 Å) layer of gold onto the two large faces of the plate. The residual air pressure during evaporation was 0.1 - 1 micron Hg. After the gold electrodes were applied, the counters were installed in a mounting similar to the one illustrated in Fig. 3. A total of 25 successful counters, with counting areas ranging from 0.05 to 5 $cm^2$ were constructed. It should be pointed out that this method of fabrication frequently produces an undesirable barrier on the back surface of the counter. Also, a considerable variation from counter to counter in characteristics such as resolution has been observed. Presumably, this results from variations in the germanium used and from small variations in the actual preparation technique. Several counters

---

* by volume

5 parts conc. $HNO_3$

3 parts 48 per cent HF

3 parts glacial acetic acid

prepared by different techniques failed to develop satisfactory barriers.

Figure 2 shows a typical electrical circuit for detection of charged particles with a surface barrier counter. The symbols $C_1$ and $R_1$ represent respectively the effective (small signal) capacitance and d-c resistance of the surface barrier. The effective counter capacitance at $77^{\circ}K$ was of the order of several hundred picofarads per $cm^2$ of counting area and the effective d-c resistance was usually several megohms or more.

Data on the properties of surface barrier counters as alpha-particle and fission-fragment detectors were obtained in cryostats which were capable of cooling the counter to temperatures as low as $0.2^{\circ}K$. Samples containing $U^{233}$ served as a source of alpha-particles, and also emitted fission-fragments when bombarded with thermal neutrons. Sources containing $Np^{237}$ were used in the lowest temperature $\alpha$-particle measurements.

## IV. EXPERIMENTAL RESULTS

Figure 4 shows the pulse height distribution obtained from a thin $U^{233}$ source with a 0.25 inch diameter counter at $77^{\circ}K$. The 4 per cent full-width at half-maximum in the main peak is close to that expected from noise in the preamplifier. The two small satellite peaks and several additional peaks at higher pulse heights (not shown in Fig. 4) were caused by impurities in the source. The resolution for alpha-particles observed at liquid helium temperatures was significantly poorer than that obtained at $77^{\circ}K$.

Figure 5 shows the pulse height distribution obtained for fission fragments from thermal neutron induced fission of $U^{233}$. The energy scale was based on the

pulse height associated with the alpha-particles. These data were obtained at $4.2^{o}K$ using a one cm diameter counter. Comparison of the location of the peaks in Fig. 5 to the known energy distribution of fission fragments indicates that, at this temperature, the response of the counter to particle energy was nearly linear up to 100 Mev. This result suggests that, with a suitable applied bias, $\eta/\epsilon$ is approximately independent of ionization density in the particle track.

Figure 6 is an integral pulse height distribution of $U^{233}$ alpha particles and fission fragments from thermal neutron induced fission of $U^{233}$. In this case, the counter was at $77^{o}K$. The source consisted of a single crystal of uranyl rubidium nitrate approximately one cm. across coated with a thin layer ($\approx 1$ mg/cm$^2$) of uranyl rubidium nitrate made from highly enriched $U^{233}$. This figure demonstrates the ability of the counter to detect fission-fragments efficiently in the presence of a large alpha-particle background.

The effective capacitance of the barrier layer at any applied voltage, as well as the value of $\epsilon/\eta$ was determined by measuring the pulse height resulting from bombardment with monoenergetic alpha-particles. These measurements were accomplished by placing a variable capacitor in parallel with the counter and measuring pulse height as a function of applied voltage and external capacitance. The barrier capacitance as a function of applied bias at $77^{o}K$ was also measured with a small signal a-c bridge. Figure 7 shows the capacitance of a $\sim 1$ cm diameter counter as a function of applied bias. Within the accuracy of the measurements, the values of CA, Eq. (5), as determined by the bridge method, were independent of frequency from 100 cps to 10 kc and were independent of a-c signal

from 10 to 100 mv peak to peak. According to Eq. (4) the values of N and $\psi_0$ can be determined directly from the slope and intercept of Fig. 7. Although the accuracy of the data was insufficient to permit a precise determination of $\psi_0$, the experimental value of - 0.6 volts is in reasonable agreement with the maximum possible value at this temperature. The value of N as determined from Fig. 7 is $1.4 \times 10^{12}$; this agrees with a value of $N = 1.5 \times 10^{12}$ which was determined by a Hall coefficient measurement on another sample cut from the same parent crystal. Comparison of these independent methods of measuring the capacitance and uncompensated donor density (N) serves as a check on the validity of the model presented in Eqs. (4) and (5), and thus on the usefulness of these equations in counter design.

Figure 8(a) shows the pulse height V as a function of applied bias ($\psi_a$) resulting from bombardment of a 1 cm diameter counter with $U^{233}$ alpha-particles at $77^{\circ}$K. The variation of pulse height with applied bias is caused both by a change in the capacitance of the counter and by an increase in $\eta$ with increasing bias. The failure of the pulse height to go to zero as the externally applied bias goes to zero is a direct consequence of the fact that the barrier exists even in the absence of externally applied bias.

Figure 8(b) shows the measured values of $\epsilon/\eta$ at $77^{\circ}$K as a function of externally applied bias. If it is assumed that $\eta$ goes to unity as the bias is increased, the limiting value of $\epsilon/\eta$ is in reasonable agreement with McKay's value of $\epsilon = 2.94 \pm 0.15$ ev/pair. The effective capacitance and $\epsilon/\eta$ as a function of applied bias have also been measured for several counters by comparing the pulse height resulting from alpha-particle bombardment to the pulse height resulting from injection of a known amount of charge, from a precision pulser,

into the counter circuit. These measurements give results which are in essential agreement with those of previously mentioned methods.

One counter has been operated sucessfully at temperatures as low as $0.2^{\circ}K$.* Figure 9 shows the pulse height resulting from bombardment of this counter with alpha-particles from a relatively thick $Np^{237}$ source, as a function of applied bias at $77^{\circ}K$ and $0.2^{\circ}K$. In this case, both pulse height curves correspond to the largest pulses observed from the thick source. The value of $\epsilon/\eta$ corresponding to the plateau region of the $0.2^{\circ}K$ curve is 2.8 ev/pair and the values of $\epsilon/\eta$ for the $77^{\circ}K$ curve are 2.9, 2.8, and 2.8 ev/pair for the 1, 2, and 3 volt points respectively. These values of $\epsilon/\eta$ are based on the measured effective capacitances obtained using the pulser method mentioned above. The rather striking difference between the two curves of Fig. 9 illustrates the difference between the behavior of these counters in the high and low temperature regions.

The rise times of pulses resulting from bombardment with monoenergetic alpha particles at $77^{\circ}K$ were measured for a 0.7 cm thick counter and for a 0.1 cm thick counter. In both cases, the experimentally determined rise time was $\leqslant 2 \times 10^{-8}$ sec which is in reasonable agreement with the predictions of simple surface barrier theory. At $4.2^{\circ}K$, the pulse rise time for the 0.7 cm thick counter was $2 \times 10^{-7}$ sec. Since the carrier mobilities would be expected to be larger at $4.2^{\circ}K$ than at $77^{\circ}K$, this relatively long pulse rise time as well

---

* The assistance of S. H. Hanauer in these measurements is gratefully acknowledged.

as the results shown in Fig. 9 indicates that at very low temperatures (where the resistivity of germanium approaches that of a good insulator), there were significant electric fields extending through a substantial portion of the crystal when external bias was applied.

It was noted that these counters are sensitive to the presence of magnetic fields, particularly when they were operated in the liquid helium temperature range. At these temperatures, application of magnetic fields of a few hundred gauss appeared to have a slight effect on the pulse height at a given bias voltage. Fields of a few kilogauss parallel to the counting surface completely suppressed the pulses resulting from alpha-particle bombardment.

## V. CONCLUSIONS

Under proper operating conditions, germanium surface barrier counters make excellent detectors for short-range charged particles. Their good resolution and apparent freedom from direct recombination make them particularly useful for resolving pulses from particles which create different specific ionization densities. The very fast rise time associated with pulse formation indicates that they might also prove useful for fast coincidence counting, particularly in experiments which involve counting fission-fragments.

The range of sizes and the compactness of a complete unit makes them potentially very useful in experiments where space is an important consideration. Their compactness might also make them useful for constructing matrices containing a large number of small individual counting elements. The main disadvantages of these devices arise from the necessity of operating them at low

temperatures and from the relatively small size of the ouptut voltage pulse.

Since this investigation was primarily concerned with counting short-range particles at low temperatures, no attempt has been made to develop a device which would operate successfully at room temperature. None of the counters produced by the techniques described in Section III have been successfully operated at temperatures above 216°K (dry ice temperature). However, Mayer and Gossick have produced small Ge counters of this general type which worked well at room temperature, and Si surface barrier counters also can give good results[9]. The model presented here should be applicable to such Si counters.

The problem of small signal size can be partially alleviated by the use of a suitably designed preamplifier. By using a special preamplifier and improved counter fabrication techniques, J. L. Blankenship of this laboratory has obtained a resolution of 1.2 to 1.3 per cent[9] for alpha-particles with a germanium counter operated at dry-ice temperature.

## ACKNOWLEDGEMENTS

The major portion of the counter fabrication work was performed by H. W. Wright. We are also indebted to J. W. Cleland, O. L. Curtis and S. H. Hanauer for helpful discussions, to G. W. Parker for the preparation of the radio-active sources, and to E. Fairstein for design of a special preamplifier.

REFERENCES

1. K. G. McKay and K. B. McAfee, Phys. Rev. 91, 1079 (1953).

2. K. G. McKay, Phys. Rev. 76, 1537 (1949).

3. J. W. Mayer and B. Gossick, Rev. Sci. Instr. 27, 407 (1957).

4. J. W. Mayer, submitted for publication in J. Appl. Phys.

5. S. H. Hanauer et. al., J. W. T. Dabbs et. al., Bull A. P. S., Series 2, Vol. 5, Number 1, (1960).

6. R. H. Kingston (Editor), Semiconductor Surface Physics (University of Pennsylvania Press, Philadelphia, 1957).

7. W. Schottky, Z. f. Phys. 118, 539 (1942).

8. S. H. Loenig and G. R. Gunther-Mohr, J. Phys. Chem. Solids 2, 268 (1957).

9. J. L. Blankenship, personal communication.

FIGURE CAPTIONS

Figure 1. Typical Surface Barrier Counter.

Figure 2. Equivalent Circuit for Surface Barrier Counter.

Figure 3. Assembly Details of Surface Barrier Counter.

Figure 4. Pulse Height Distribution from $U^{233}$ Alpha Particles.

Figure 5. Pulse Height Distribution of Fission Fragments from Thermal Fission of $U^{233}$.

Figure 6. Counting Rate as a Function of Pulse Height for Alpha Particles and Fission Fragments from $U^{233}$ Coated Crystal.

Figure 7. Capacitance of Counter at $77^{o}K$ as a Function of Applied Bias.

Figure 8. Pulse Height and $\varepsilon/\eta$ from $U^{233}$ Alpha Particles Incident on Counter at $77^{o}K$.

Figure 9. Pulse Height Resulting from $Np^{237}$ Alpha Particles Incident on a Germanium Surface Barrier Counter.

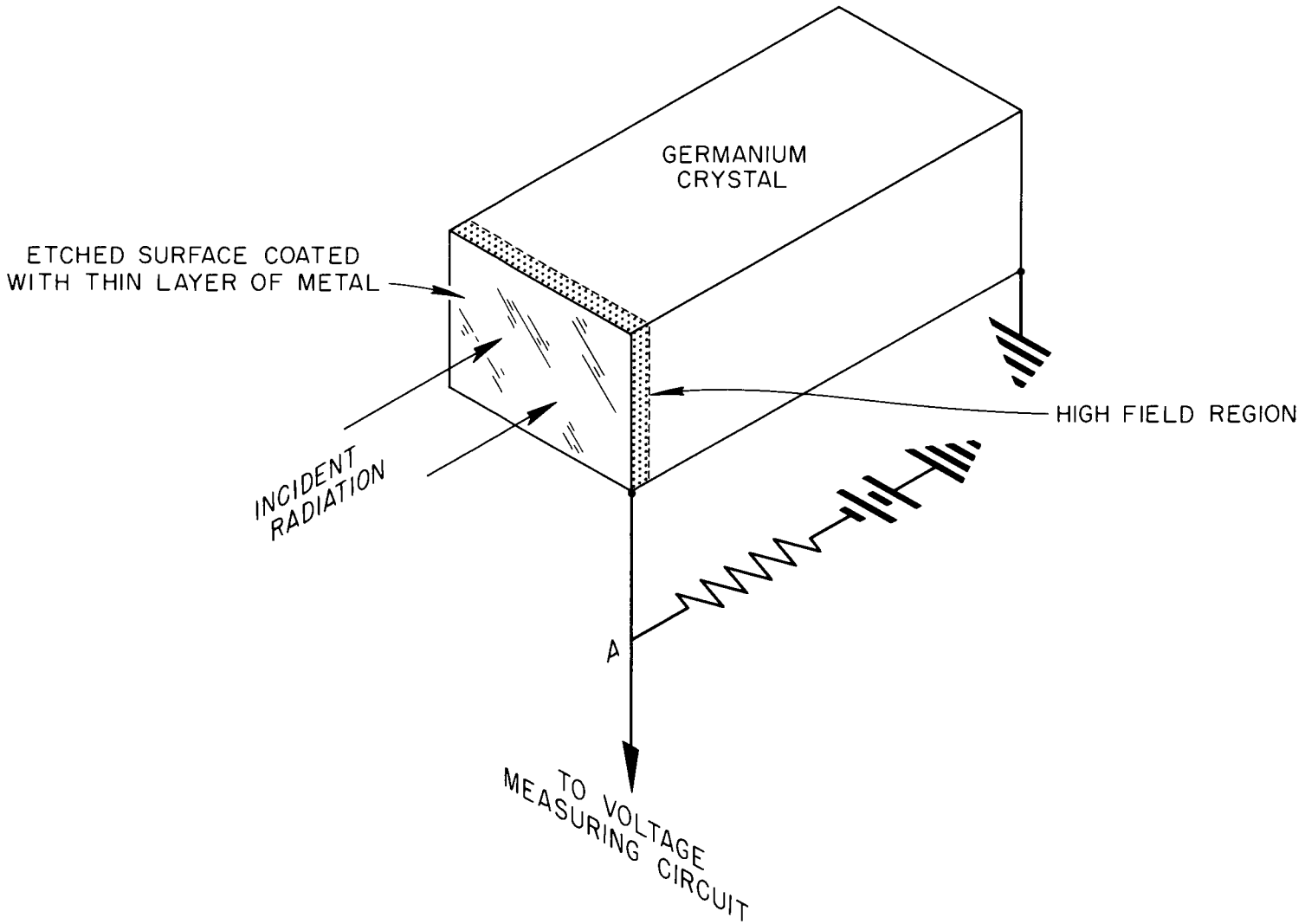


Fig. 1. Typical Surface Barrier Counter.

UNCLASSIFIED
ORNL-LR-DWG 43116

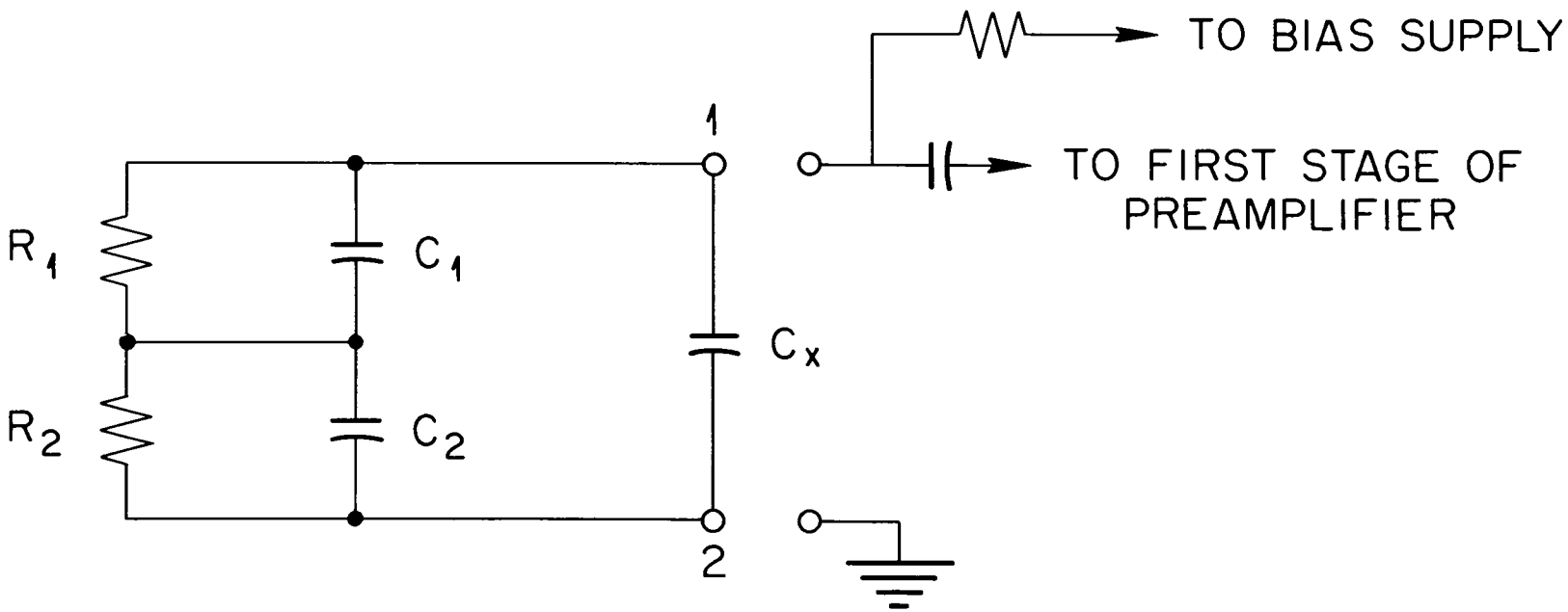


Fig. 2. Equivalent Circuit for Surface Barrier Counter.

UNCLASSIFIED
ORNL-LR-DWG 27514R2

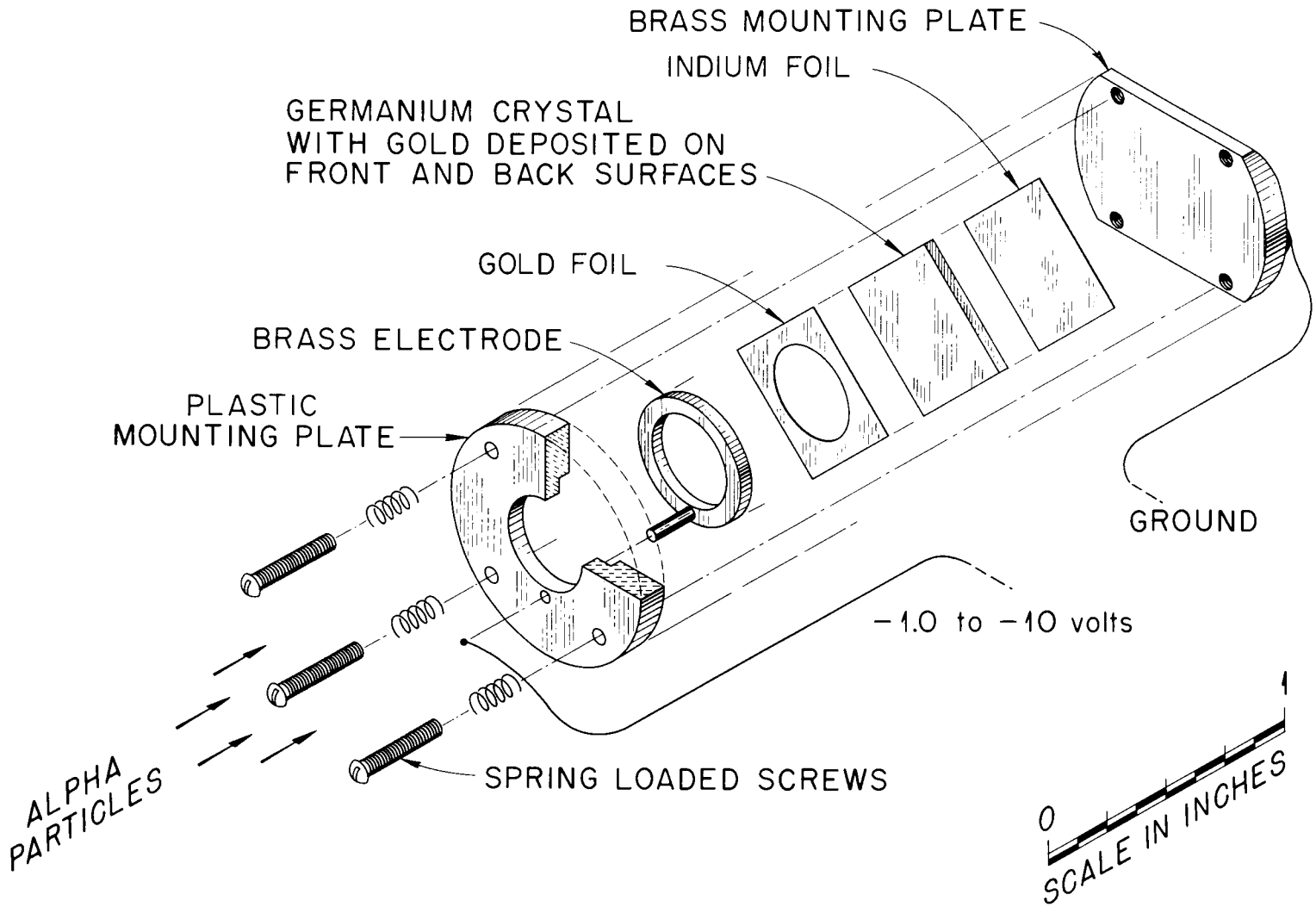


Fig. 3. Assembly Details of Surface Barrier Counter.

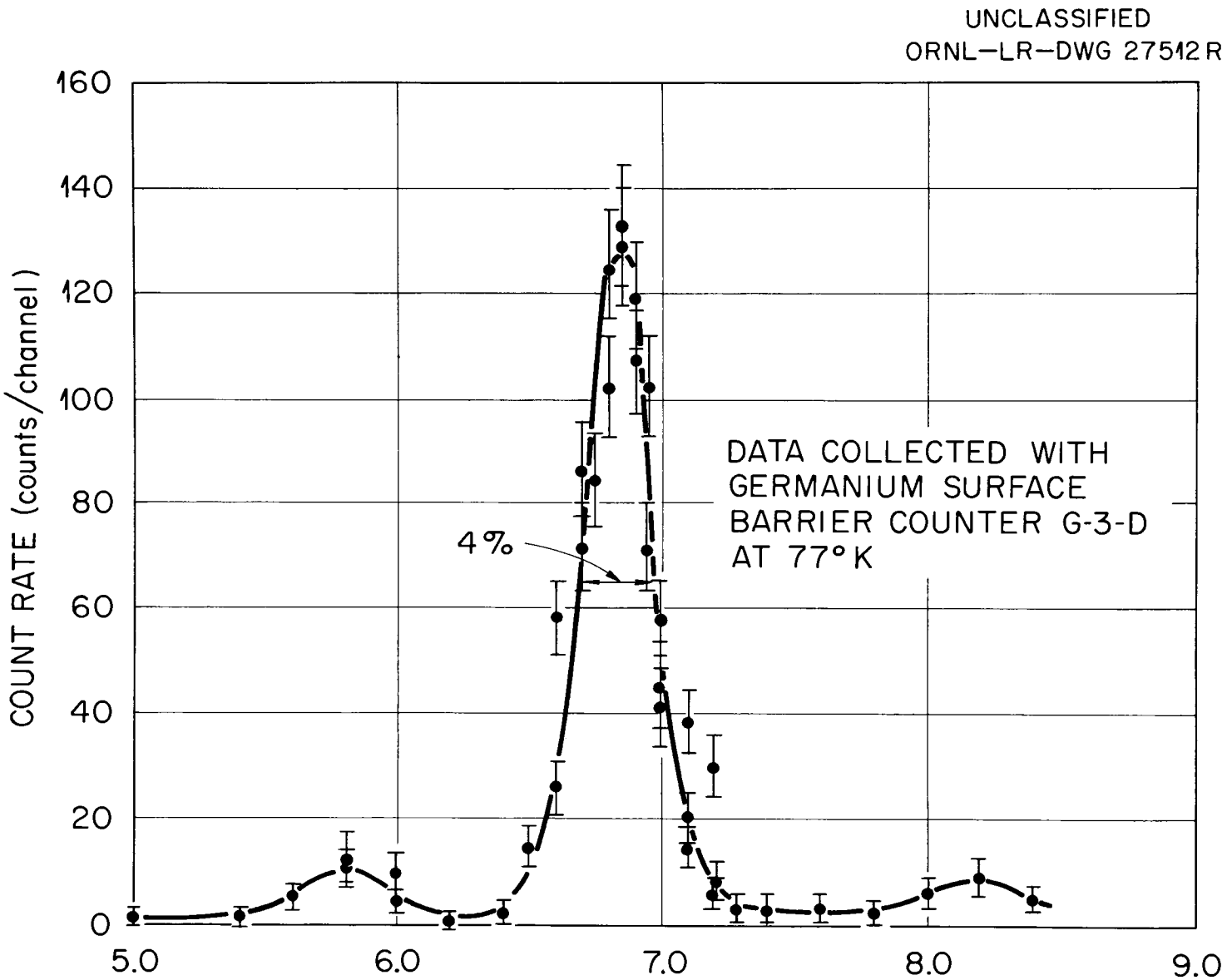


Fig. 4. Pulse Height Distribution from $U^{233}$ Alpha Particles.

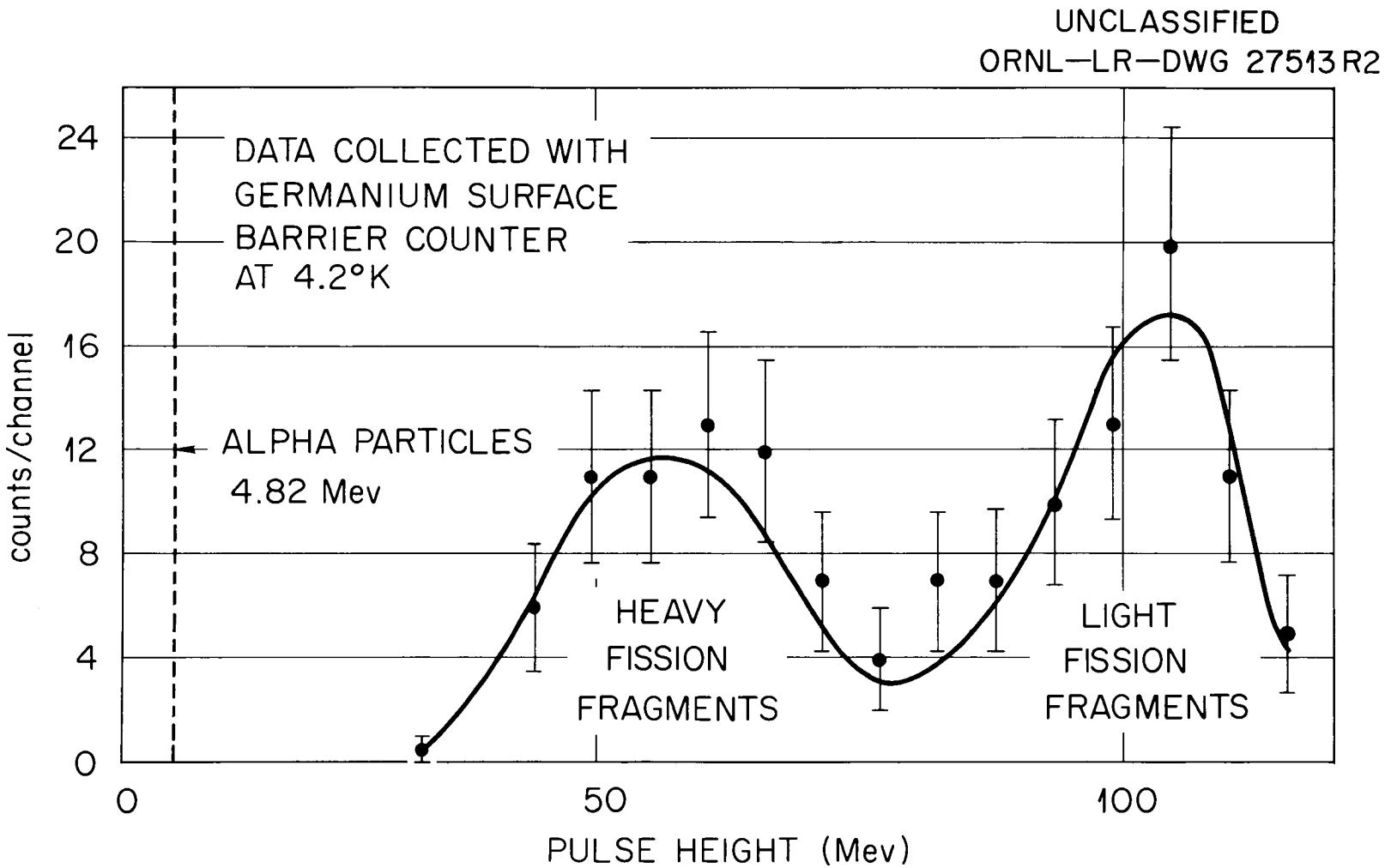


Fig. 5. Pulse Height Distribution of Fission Fragments from Thermal Fission of $U^{233}$.

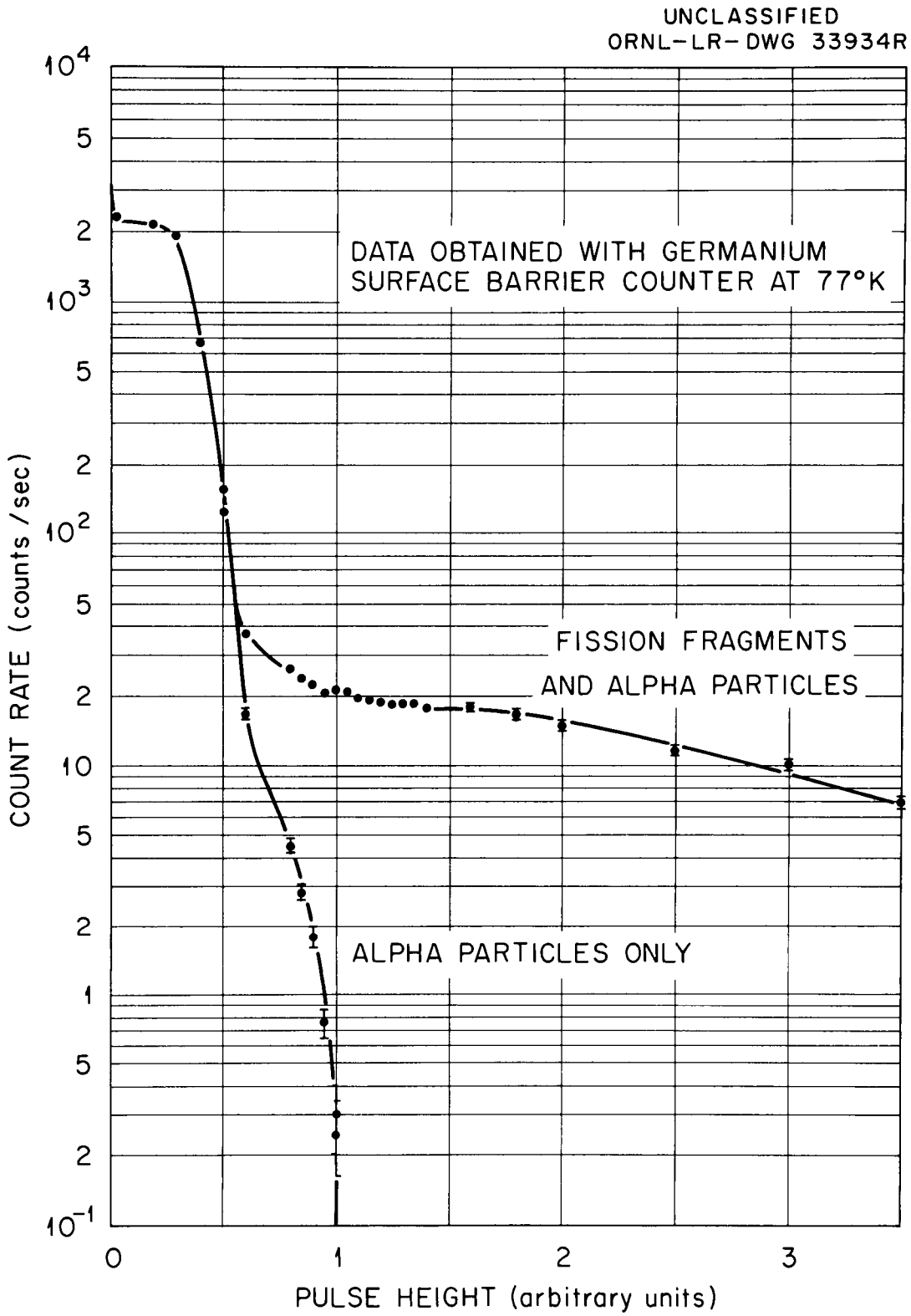


Fig. 6. Counting Rate as a Function of Pulse Height for Alpha Particles and Fission Fragments from $U^{233}$ Coated Crystal.

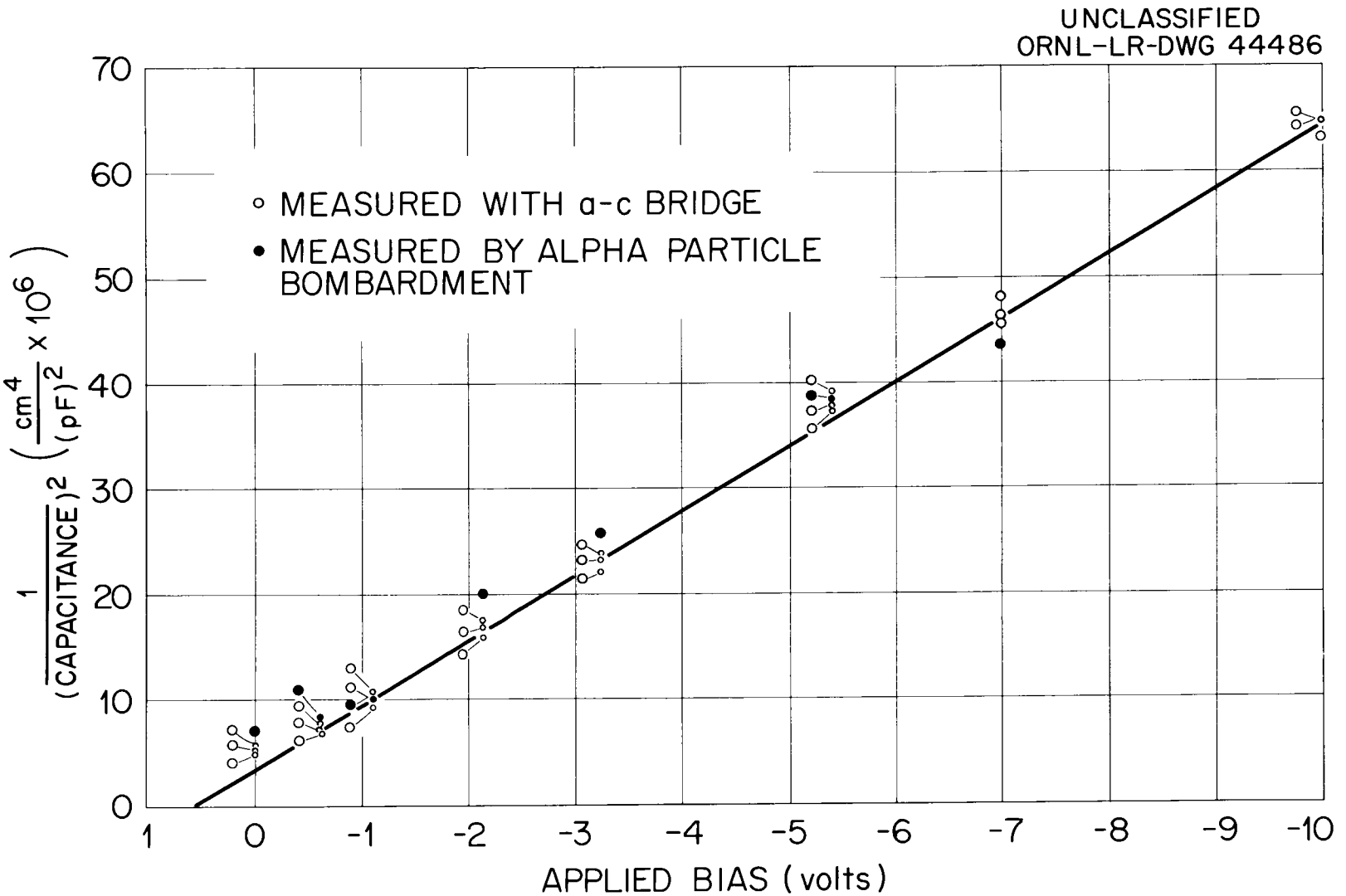


Fig. 7. Capacitance of Counter at 77°K as a Function of Applied Bias.

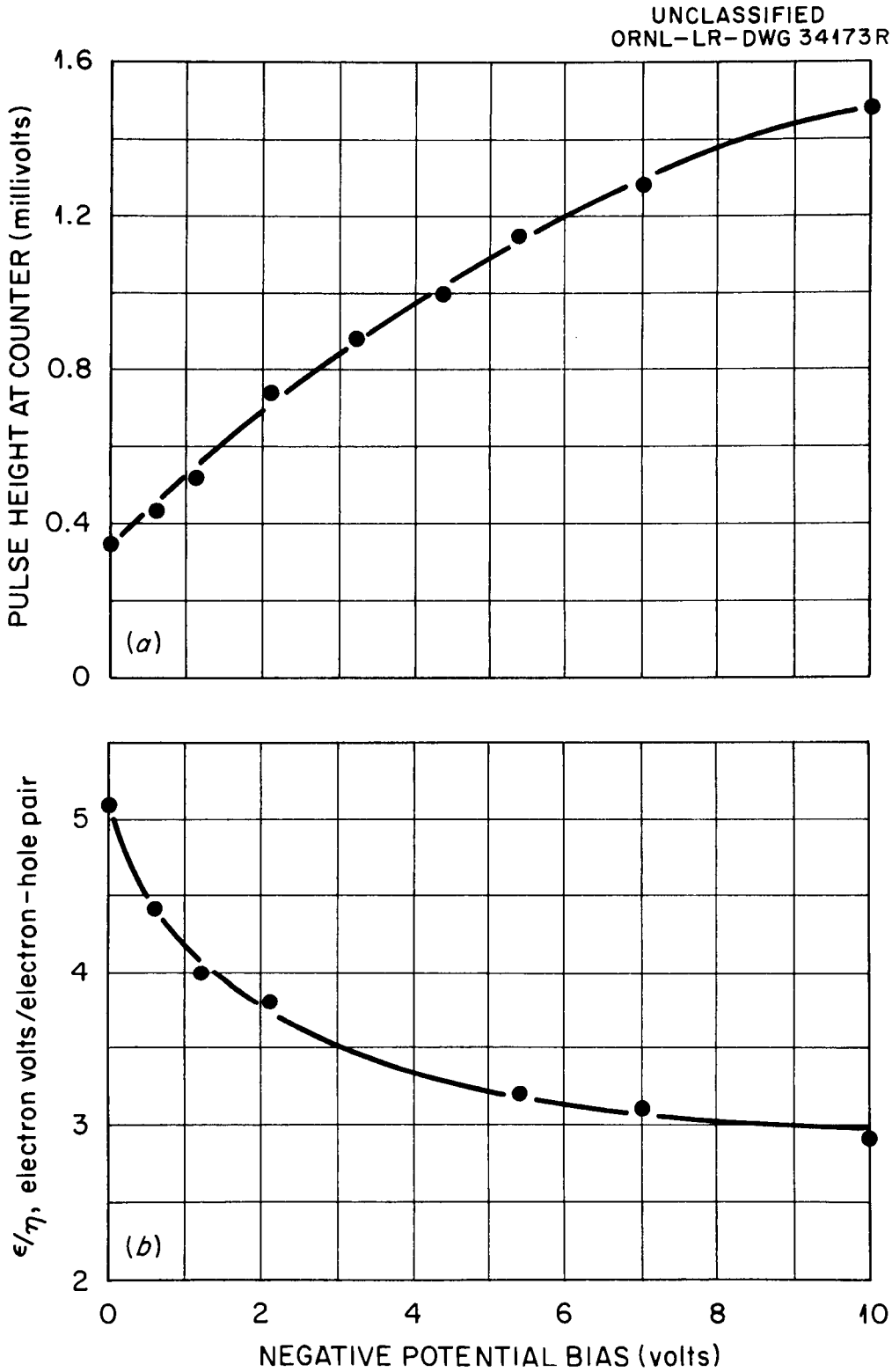


Fig. 8. Pulse Height and $\epsilon/\eta$ from $U^{233}$ Alpha Particles Incident on Counter at 77°K.

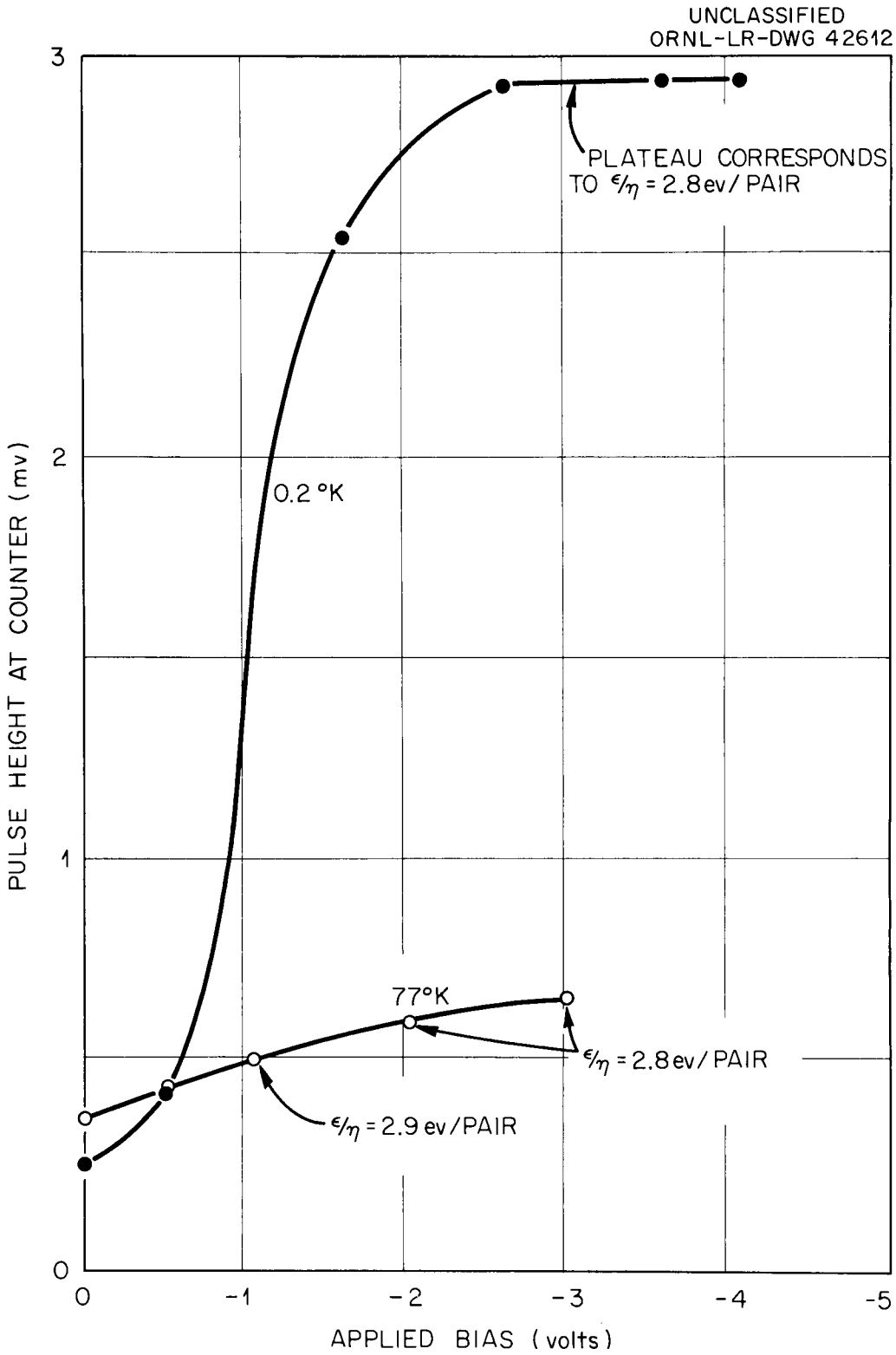


Fig. 9. Pulse Height Resulting from $Np^{237}$ Alpha Particles Incident on a Germanium Surface Barrier Counter.

ORNL-2877
UC-37 Instruments
TID-4500 (15th ed.)

INTERNAL DISTRIBUTION

1. C. E. Center
2. Biology Library
3. Health Physics Library
4-5. Central Research Library
6. Reactor Experimental Engineering Library
7-26. Laboratory Records Department
27. Laboratory Records, ORNL R.C.
28. A. M. Weinberg
29. L. B. Emlet (K-25)
30. J. P. Murray (Y-12)
31. J. A. Swartout
32. E. H. Taylor
33. E. D. Shipley
34. A. H. Snell
35. M. L. Nelson
36. W. H. Jordan
37. G. E. Boyd
38. R. A. Charpie
39. S. C. Lind
40. F. L. Culler
41. A. Hollaender
42. W. M. Good
43. M. T. Kelley
44. J. L. Fowler
45. R. S. Livingston
46. K. Z. Morgan
47. T. A. Lincoln
48. A. S. Householder
49. C. P. Keim
50. C. S. Harrill
51. C. E. Winters
52. D. S. Billington
53. H. E. Seagren
54. D. Phillips
55. E. O. Wollan
56. A. J. Miller
57. J. A. Lane
58. R. B. Briggs
59. R. N. Lyon
60. W. C. Koehler
61. E. P. Blizard
62. M. E. Rose
63. M. J. Skinner
64-89. L. D. Roberts
90. J. E. Sherwood
91. R. B. Murray
92. J. A. Harvey
93. A. Simon
94. J. J. Pinajian
95. F. C. Maienschein
96. P. M. Reyling
97. E. G. Bohlmann
98. J. W. Cleland
99. O. L. Curtis
100. G. W. Parker
101. E. Fairstein
102. J. H. Crawford
103. H. C. Schweinler
104. C. J. Borkowski
105. H. O. Cohn
106. J. H. Neiler
107. H. W. Schmitt
108. H. B. Willard
109. T. E. Willmarth
110. A. Chetham-Strode
111. J. C. Pigg
112. R. K. Abele
113. J. L. Blankenship
114. R. A. Dandl
115. R. A. Lorenz
116. W. W. Harris
117. H. W. Wright
118-119. S. H. Hanauer
120-169. F. J. Walter
170-195. J. W. T. Dabbs
196. A. Zucker
197. M. L. Halbert
198. R. F. Christy (consultant)
199. W. A. Fowler (consultant)
200. H. Feshbach (consultant)
201. M. Goldhaber (consultant)
202. M. S. Livingston (consultant)
203. N. F. Ramsey (consultant)
204. J. R. Richardson (consultant)
205. J. A. Wheeler (consultant)
206. J. H. Van Vleck (consultant)
207. ORNL - Y-12 Technical Library, Document Reference Section

EXTERNAL DISTRIBUTION

208. Division of Research and Development, AEC, ORO
209. W. K. H. Panofsky, Stanford University
210. A. Glassgold, University of Minnesota
211-727. Given distribution as shown in TID-4500 (15th ed.) under Instruments category