MARTIN MARIETTA ENERGY SYSTEMS LIBRARIES
3 4456 0059623 7

4

CENTRAL RESEARCH LIBRARY
DOCUMENT COLLECTION

ORNL-2797
UC-47 Technology-Feed Materials

FLUOROX PROCESS: PRODUCTION OF UF_6 IN A FLUIDIZED BED REACTOR

C. D. Scott
J. B. Adams
J. C. Bresee

OAK RIDGE NATIONAL LABORATORY
operated by
UNION CARBIDE CORPORATION
for the
U.S. ATOMIC ENERGY COMMISSION

CENTRAL RESEARCH LIBRARY
DOCUMENT COLLECTION
LIBRARY LOAN COPY
DO NOT TRANSFER TO ANOTHER PERSON
If you wish someone else to see this document, send in name with document and the library will arrange a loan.

Printed in USA. Price $1.50. Available from the

Office of Technical Services
Department of Commerce
Washington 25, D.C.

LEGAL NOTICE

This report was prepared as an account of Government sponsored work. Neither the United States, nor the Commission, nor any person acting on behalf of the Commission:

A. Makes any warranty or representation, expressed or implied, with respect to the accuracy, completeness, or usefulness of the information contained in this report, or that the use of any information, apparatus, method, or process disclosed in this report may not infringe privately owned rights; or

B. Assumes any liabilities with respect to the use of, or for damages resulting from the use of any information, apparatus, method, or process disclosed in this report.

As used in the above, "person acting on behalf of the Commission" includes any employee or contractor of the Commission, or employee of such contractor, to the extent that such employee or contractor of the Commission, or employee of such contractor prepares, disseminates, or provides access to, any information pursuant to his employment or contract with the Commission, or his employment with such contractor.

ORNL-2797

Contract No. W-7405-eng-26
Chemical Technology Division

FLUOROX PROCESS: PRODUCTION OF UF_6 IN A FLUIDIZED BED REACTOR

C. D. Scott
J. B. Adams
J. C. Bresee

DATE ISSUED

OCT 13 1960

OAK RIDGE NATIONAL LABORATORY
Oak Ridge, Tennessee
operated by
UNION CARBIDE CORPORATION
for the
U..S. ATOMIC ENERGY COMMISSION

MARTIN MARIETTA ENERGY SYSTEMS LIBRARIES

3 4456 0059623 7

ABSTRACT

The engineering feasibility of producing UF_6 from UF_4 by oxidation with dry air or oxygen in a continuous 4-in.-dia fluidized bed reactor was demonstrated in eight runs at bed temperaturesof 700-850°C. With refined UF_4 feed and either dry oxygen or air as the oxidizing and fluidizing gas, up to 90% of the theoretical amount of UF_6 formed was collected in cold traps, and the remainder was accounted for by side reactions. With crude UF_4 feed, corrosion of the Inconel reactor was excessive. A method of preparing feed for the reactor, by compacting fine UF_4 to +20 mesh and grinding the compact to -20 +150 mesh, was developed.

A cost estimate for an integrated Fluorox plant, including feed preparation, oxidation, and provision for recycle of the by-product UO_2F_2, with a capacity equivalent to 5000 tons of U_3O_8 per year, indicated a unit manufacturing cost of $0.29 per pound of uranium converted from UF_4 to UF_6.

CONTENTS

		Page
1.0	Introduction	4
2.0	Description of Process	4
3.0	Development of a Fluidized Bed Reactor	5
3.1	Additional Chemical Considerations in Design	8
3.2	Materials of Construction	9
3.3	Heat Transfer	10
3.4	Mechanical Problems	12
4.0	Alternative Oxidation Reactor Designs	12
4.1	Moving Bed Reactor	12
4.2	Flame Reactor	14
5.0	Experimental Results from Fluidized Bed Reactor	21
5.1	Batch Runs	21
5.2	Continuous Runs	23
5.3	Determination of UF_4 Feed Rate	37
6.0	Fluidized Bed Feed Preparation	39
7.0	Recycle of UO_2F_2	39
7.1	Chemistry	39
7.2	Purification of a Side Stream	42
8.0	Plant Cost Estimate	42
8.1	Design Criteria	42
8.2	Cost Estimating Procedure	44
8.3	Fixed Capital Estimate	44
8.4	Manufacturing Cost Estimates	49
9.0	Evaluation and Application of the Fluorox Process	49
10.0	References	52
11.0	Appendix	54
11.1	Determination of Molecular Constituents in Fluorox Solids	54
11.2	Determination of UF_6 Material Balance	55
11.3	Evaluation of Rate Constants	56

1.0 INTRODUCTION

This report describes the engineering development of a fluidized bed reactor for producing UF_6 from UF_4 by the Fluorox reaction: $2UF_4 + O_2 \rightarrow UF_6\uparrow + UO_2F_2$. The purpose of the Fluorox Program has been to establish the chemical and engineering feasibility of a process in which oxidation of UF_4 is the primary reaction for producing UF_6. The basic chemistry of this reaction has been studied by various groups,[1-5] and its adaptation to commercial operations has been considered. The engineering phase of the program included the development, design, and operation of a 4-in.-dia fluidized bed reactor and the development of a method for preparing sized UF_4 feed for the reactor by compaction and size reduction. With information gained from both the engineering and laboratory studies a complete process flowsheet was developed and a cost estimate for a Fluorox plant with an annual capacity equivalent to 5000 tons of U_3O_8 was prepared.

The original engineering development work on the oxidation reaction was done with a moving bed reactor,[6,7] and a flame reactor[8-10] was examined briefly. Neither proved as satisfactory as the fluidized bed. The initial laboratory study of the oxidation reaction, of the various side reactions, and recycle of the by-product UO_2F_2 has been reported elsewhere.[5,10-14]

The authors acknowledge the work of G. K. Ellis, D. H. Newman, and W. G. Sisson in this program. Chemical, spectrographical, and x-ray analyses were made by the groups of G. R. Wilson, W. R. Laing, R. L. Sherman, and C. Feldman of the ORNL Analytical Chemistry Division. W. G. Stockdale of the Chemical Technology Division assisted in preparation of the cost estimate and A. Goldman and A. Litman of the ORNL Metallurgy Division assisted in the metallographic analyses for corrosion purposes.

2.0 DESCRIPTION OF PROCESS

The purpose of the Fluorox Program has been the development of a complete process for producing UF_6 from UF_4, including a method for recycling by-product UO_2F_2. The three major steps in the overall process are oxidation of the UF_4, reduction of the by-product UO_2F_2 to UO_2, and hydrofluorination of the resulting UO_2 to UF_4:

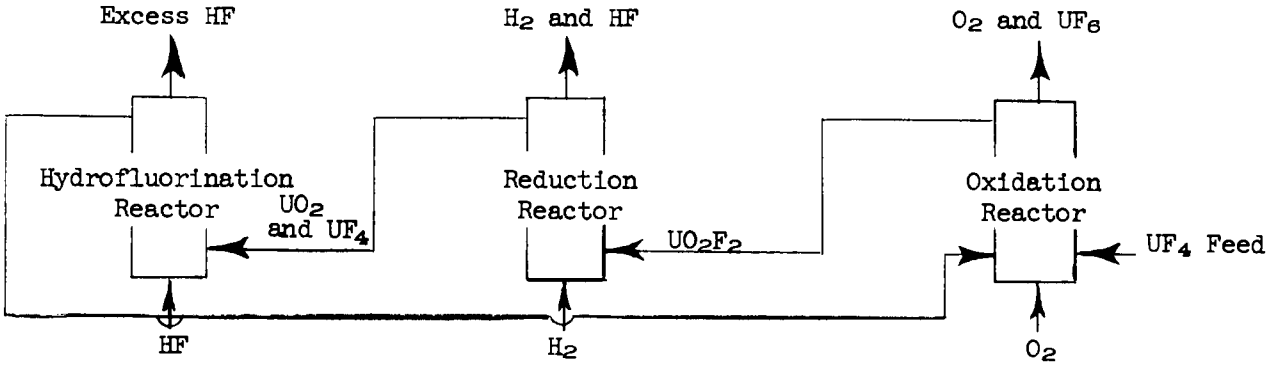

All three steps can be carried out in fluidized bed reactors. A complete process flowsheet (Fig. 2.1) with UF_4 as the feed would also include feed preparation, UF_6 collection in cold traps, and UO_2F_2 purification in a side stream (Excer process).[15] Oxygen would be recycled to the oxidation reactor, the hydrogen and HF from the reduction reactor would be recycled to the reduction and hydrofluorination reactors, respectively, and the aqueous HF from the hydrofluorination reactor would be used in the Excer purification step.

Since there will be provisions for reduction and hydrofluorination in the recycle scheme, UO_3 could be used as the feed material. The UO_3 would follow the same processing path as the recycled UO_2F_2. Since a facility would be needed for recovering excess HF, a fourth reactor could be added to the process, in which the UO_3 would react with HF in the off-gas from the reduction and hydrofluorination reactors, thus acting as a HF clean-up reactor:

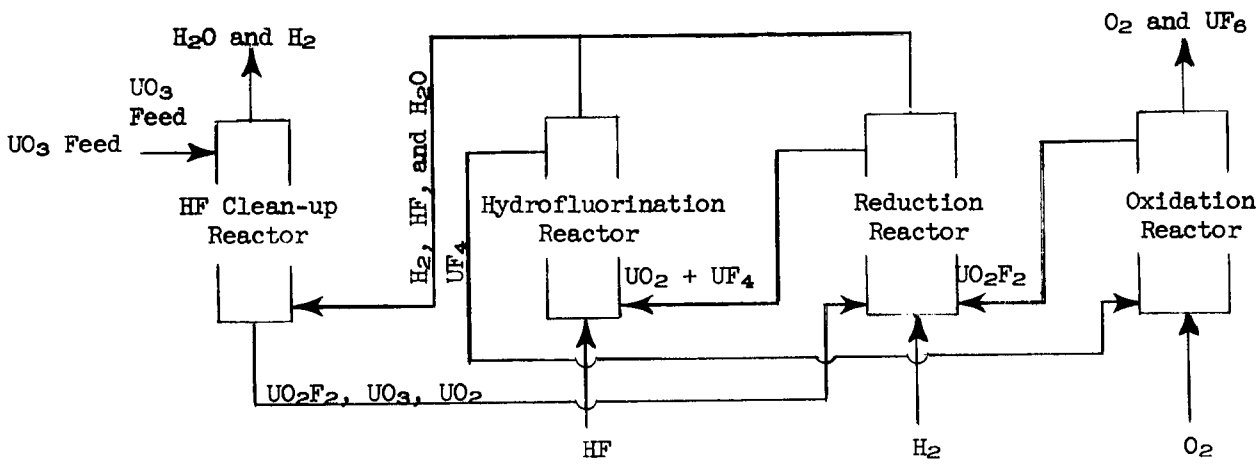

This technique would utilize the HF more efficiently and perhaps do away with costly HF recovery equipment.

3.0 DEVELOPMENT OF A FLUIDIZED BED REACTOR

Initially a 3-in.-dia batch-fed fluidized bed was used to study the primary Fluorox reaction, $2UF_4 + O_2 = UO_2F_2 + UF_6\uparrow$. Later a 4-in.-dia continuous fluidized bed reactor was developed. The continuous reactor was composed of a 4-in.-dia fluidizing section, a 6-in.-dia de-entrainment section containing porous metal filters, and a 1-in.-dia overflow line which maintained a constant bed volume (Fig. 3.1). Results of work with this reactor indicated that sustained, continuous operation was possible. Inconel was a suitable material of construction. It was found that the heat should be introduced by preheating the gas stream rather than heating through the walls and the off-gas filters should be within the reactor proper.

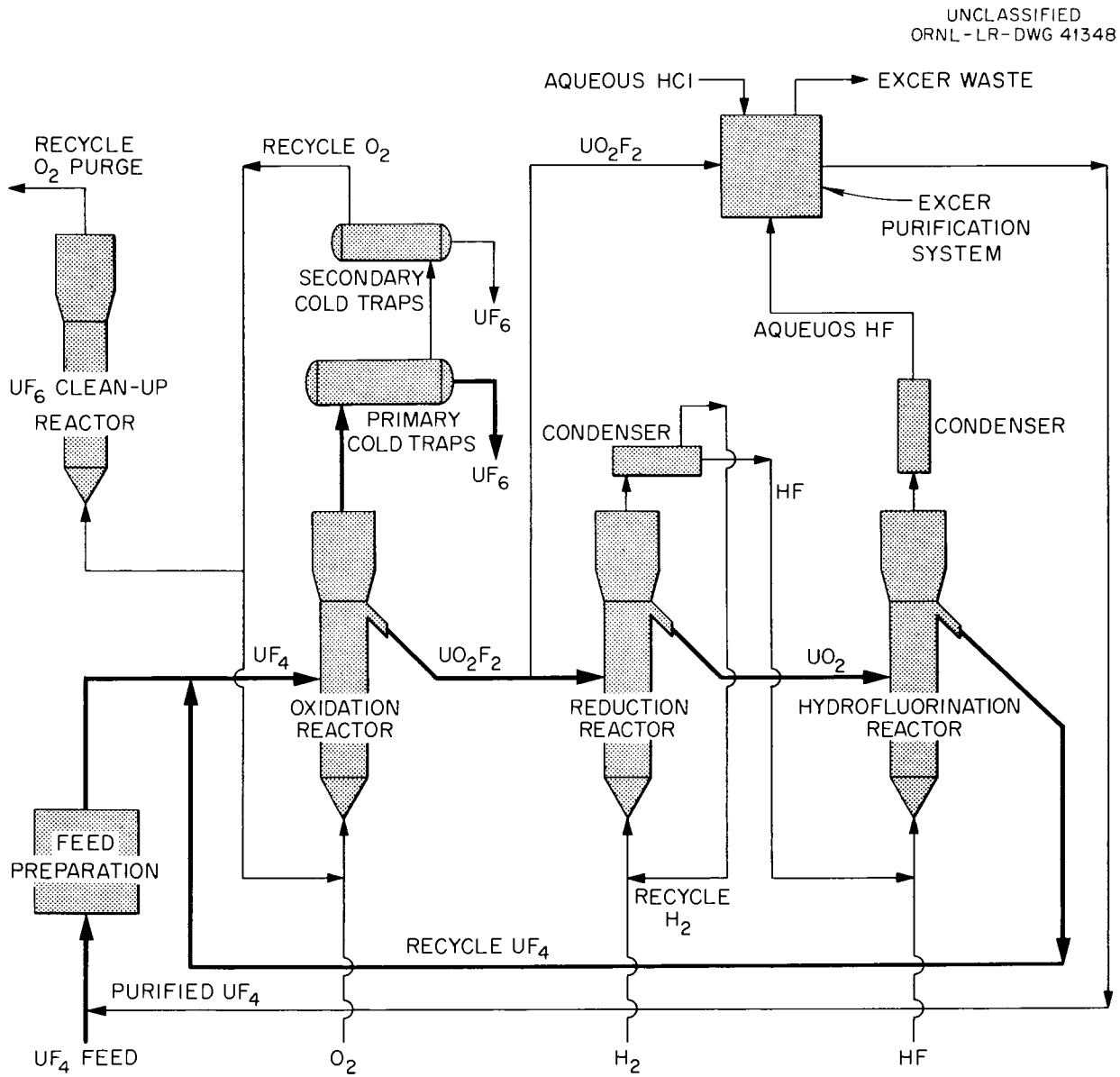

Fig. 2.1. Fluorox process chemical flowsheet for UF_4 feed and recycle of O_2, H_2, and HF.

UNCLASSIFIED
ORNL-LR-DWG 47783

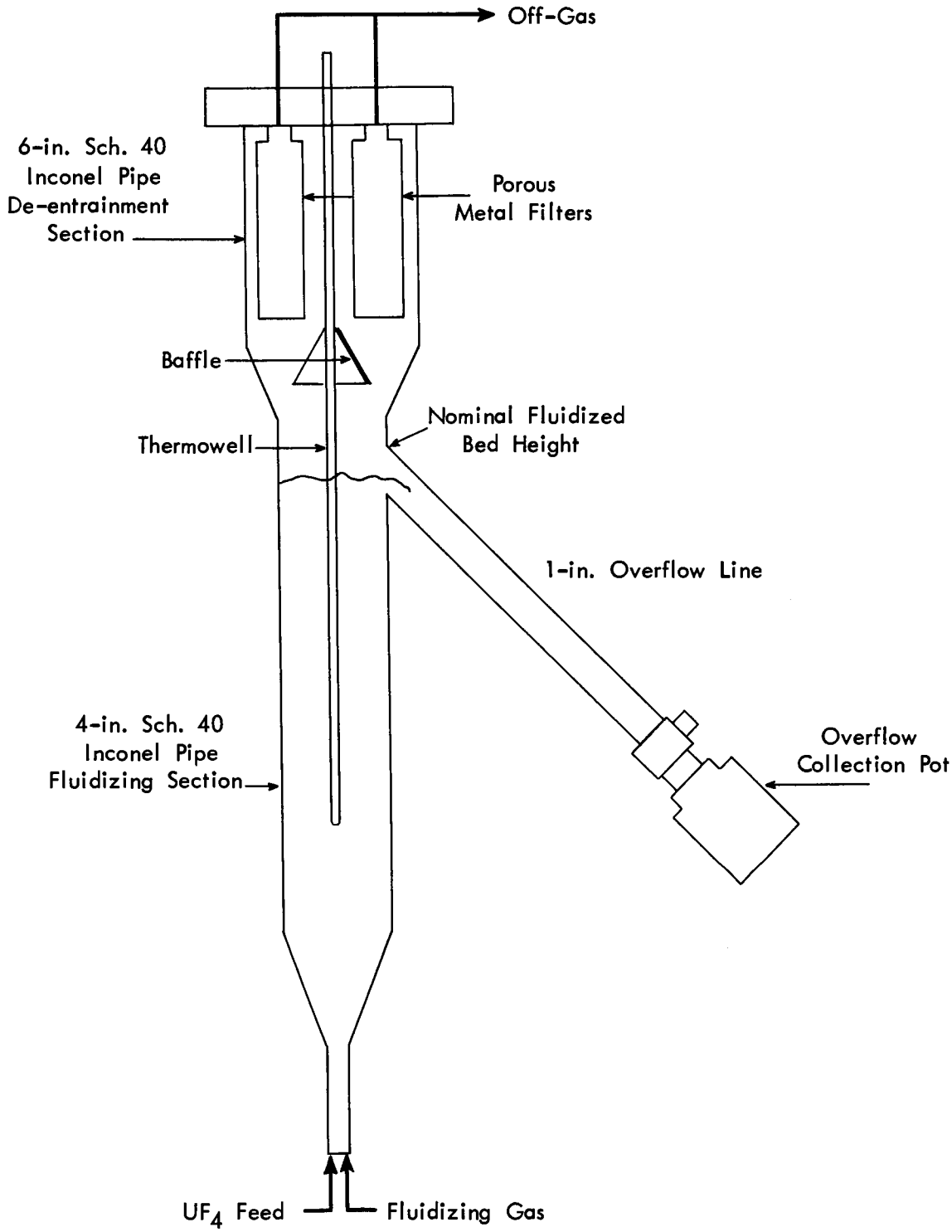

Fig. 3.1. Schematic of 4-in.-dia fluidized bed reactor.

The design of the fluidizing section does not appear to be critical, and relatively large length-to-diameter ratios may be used.

3.1 Additional Chemical Considerations in Reactor Design

In initial laboratory work on the primary oxidation reaction,

$$2UF_4 + O_2 \rightarrow UO_2F_2 + UF_6\uparrow$$

the reaction rate was found to be first order with respect to the UF_4 surface area and dependent on the oxygen partial pressure[5] at temperatures in the neighborhood of 550°C. The reaction half-time in the temperature range 800-850°C (the proposed operating temperature range) is 15-20 min.

At temperatures above 750°C, side reactions that decrease the product yield and tie up the UF_4 feed were also found to be more favorable with increasing temperature. The side reactions noted were: (1) formation of intermediates such as UF_5, U_2F_9, and U_4F_{17} by the reaction of UF_4 with UF_6; (2) formation of UO_2F_2 by the reaction of UF_6 with water ($UF_6 + 2H_2O \rightarrow UO_2F_2 + 4HF$); and (3) reaction of UF_6 with uranium oxides and the metal walls of the reactor to form UO_2F_2 and metal fluorides. The UO_2F_2 would have to be recycled to the UF_4 feed stream.

The use of feed with low water and oxide contents decreases the amount of UO_2F_2 recycle.

The reaction of reactor metal walls with UF_6 is not a significant chemical consideration when a large-diameter reactor is used because of the very small wall surface-to-bed volume ratio, and the formation of the intermediate uranium fluorides depends only on the concentrations of UF_4 and UF_6 in the reactor at a specific temperature.

The desirability of maintaining a low UF_4 concentration to prevent intermediate formation, together with the relatively low sintering temperature of a pure bed of UF_4, made it necessary to use a fluidized bed dilute in UF_4. A dilute bed is obtained by allowing UO_2F_2 to build up so that the steady-state UF_4 concentration is low. This is possible since the by-product UO_2F_2 is the only solid product of the reaction.

In the final 4-in.-dia fluidized bed reactor design, constant bed volume was maintained in the reactor by an overflow. The bed was initially charged with pure UO_2F_2. When UF_4 was added, UO_2F_2 and UF_6 were formed, with the UF_6 leaving the reactor in the gas phase and UO_2F_2 with a trace of UF_4 leaving via the solids overflow. A specific UF_4 concentration was maintained by adjusting the UF_4 feed rate and the chemical reaction rate (by temperature control). Thus, by proper balance any desired UF_4 concentration in the bed could be maintained (Table 3.1).

Table 3.1. Effect of Feed Rate and Bed Temperature on UF_4 Concentration in Continuous Fluidized Bed Runs

UF_4 Feed Rate, kg/hr	Steady-state Bed Temp., °C	UF_4 Conc. in Bed, wt %
710	800	3.8
914	825	0.6
1078	825	0.9
1088	850	0.8
1508	812	3.7
1508	819	2.2

The effects of UF_4 sintering are also attenuated by use of a dilute bed. Pure UF_4 sinters appreciably above 800°C; however, at low UF_4 concentrations in the bed, i.e., less than 20 wt %, the net agglomeration of particles is negligible and the bed may be operated at 800-850°C without sintering.

In order to decrease product losses due to formation of the uranium fluoride intermediates, the off-gas filters were placed in the reactor itself. With this arrangement any solid material entrained in the gas stream was returned directly to the fluidized bed. Since some of the uranium fluoride intermediates are volatile at the reaction temperature and particulates formed during desublimation are fairly small, large quantities of this material collected at the filters. Intermediates could also be formed in the filter section by entrainment of UF_4 fines from the bed followed by equilibration with the UF_6-bearing gas passing through the filters.

If the filter section is maintained at a temperature below that at which the uranium intermediate fluorides are volatile, the intermediate fluorides and fine UF_4 powder are retained by the filter and returned to the bed by blow-back. At steady-state an equilibrium concentration of the intermediate fluorides will be present in the reactor; however, none will leave the reactor in the off-gas.

When the filters were operated below 500°C, preferably at 100-200°C, no intermediate fluorides were detected past the filters and only small amounts were found in the reactor adhering to the upper walls. Overflow solids contained only trace amounts of the intermediate fluorides. In operation with a dilute bed, where the UF_6 in the fluidizing gas was at a low partial pressure, U_4F_{17} was the only intermediate uranium fluoride identified. Equilibrium partial pressure data[16] confirmed U_4F_{17} as the stable solid phase to be expected.

3.2 Materials of Construction

Since UF_6 is known to be highly corrosive at temperatures >600°C, the corrosion of Inconel in the Fluorox fluidized bed medium was expected to be

prohibitive. However, the fluidized bed reactor walls tend to build up a protective scale of metal oxides and fluorides which partially protects the metal. As a result of this scale, the corrosion of the Inconel vessel in the fluid bed region was measured to be 150-700 mils/year when the bed was maintained up to 860°C with wall temperatures 50-150°C higher. In general, the lower corrosion figures were obtained when operating conditions approached steady-state and there were no severe temperature fluctuations. On this basis, if Inconel is used as the material of construction for a production reactor, there would have to be provisions for replacing the fluid-bed section of the reactor on a routine basis.

Corrosion was much more severe when crude UF_4 containing considerable amounts of low-melting metallic fluorides were reacted in the fluidized bed. These impurities acted as fluxing agents for the UF_4 and caused melting at temperatures as low as 730°C. The resulting corrosion rate of Inconel was 3-7 mils/hr. It is possible that nickel might be a more resistant material of construction for this application at < 750°C. However, the reaction rate of UF_4 with oxygen is probably uneconomically low at this temperature.

Other possibilities considered for decreasing the effects of corrosion were a resistant ceramic liner or coating and a porous Inconel wall cooled and protected by a transpirational flow of oxygen through it. Corrosion tests on flame-sprayed coatings of alumina, zirconia, and zirconium silicate on Inconel showed all to be unsatisfactory (Fig. 3.2). A liner of UO_2 (or U_3O_8), as was used in a Fluorox moving bed reactor,[7] may be resistant if the UO_2 can be fired to an unreactive state. This was not attempted. A porous metal wall and transpirational corrosion protection are probably feasible in theory; however, in practical operations the problems of wall heat loss, of nonuniform transpirational gas flow with height, hot spots, burn-out due to localized plugging of the porous wall, excessive rate of erosion of the wall, etc. appeared to offer formidable development problems.

3.3 Heat Transfer

One of the reasons for using a fluidized bed reactor is the excellent control of temperature within the bed allowed by a high gas flow through the suspended solids. Since the heat of reaction for the oxidation of UF_4 is approximately zero at 800°C, the only heat addition to the system needed is that necessary to heat up incoming UF_4 feed and oxygen.

Although heat can be introduced through reactor walls, this results in high wall temperatures and corrosion; thus, it is better to introduce heat by the fluidizing gas or by internal heating. Use of internal heaters would not be wise in the highly corrosive medium of the bed; therefore preheating the fluidizing gas as well as preheating the UF_4 feed seems to be the best method of heat introduction. In the later experimental runs this method was used.

Another method of internal heating is use of a combustible gas mixture as the fluidizing medium, causing combustion to occur within the bed. In the use of such a scheme the resulting gas products must not contain water since

UNCLASSIFIED
PHOTO 43389
& 43646

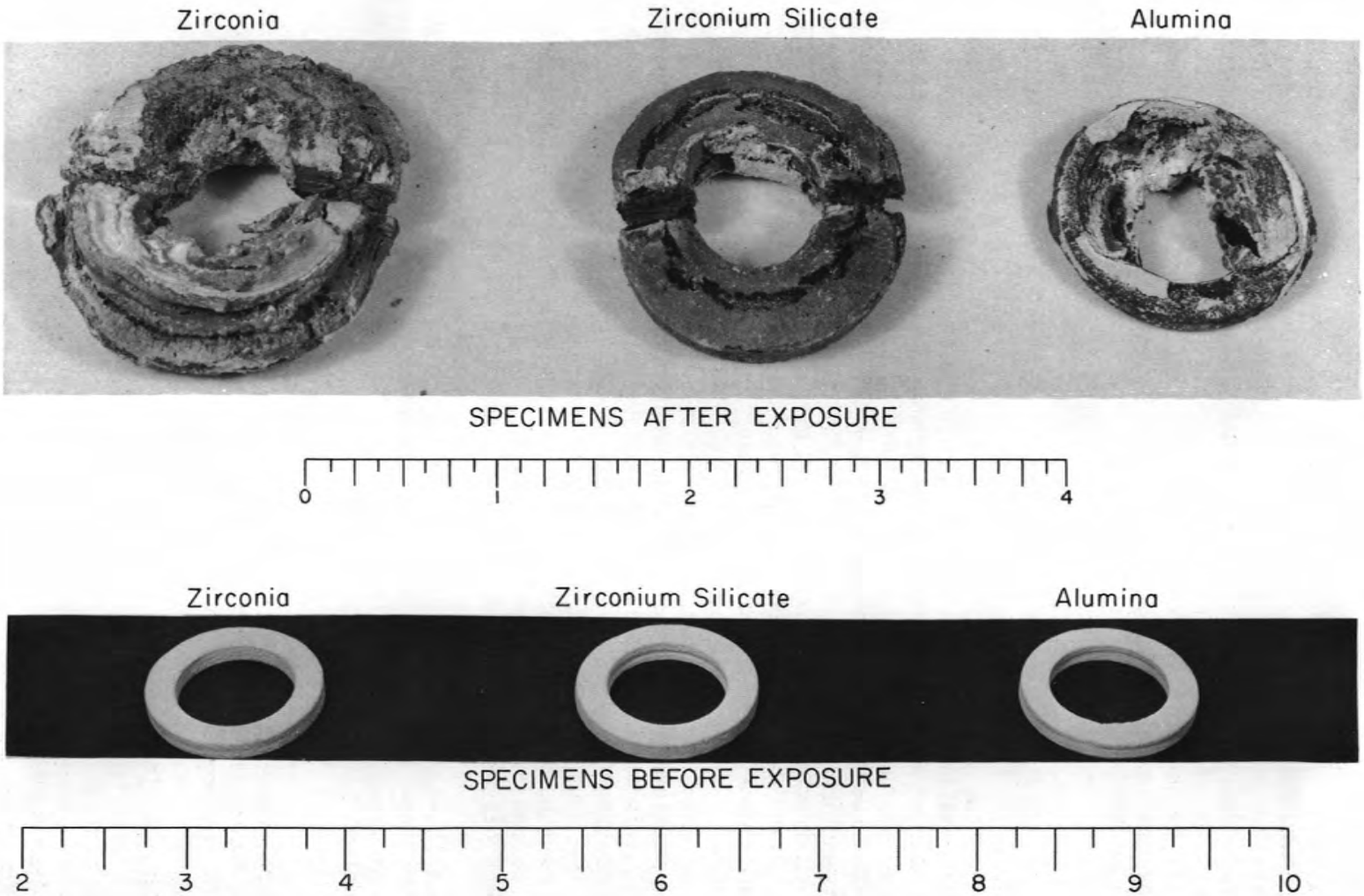

Fig. 3.2. Effect of Fluorox fluidized bed environment at 800°C for 18 hr on flame sprayed ceramic corrosion specimens.

water reacts with UF_6, reducing the product yield ($UF_6 + 2H_2O \rightarrow UO_2F_2 + 4HF$). A pure grade of CO (99.5% CO) has been used on a limited scale to produce heating by internal combustion. In one test, fluidizing gas at room temperatures containing 15-30% CO was introduced to the heated fluidized bed where internal combustion occurred. This mixture was used to sustain the fluidized bed temperature at 800-840°C for short periods. The effects on reaction rate and possible reaction between CO or CO_2 and UF_6 were not determined.

Use of the heat in the exhaust gas and solids from the fluidized bed reactor by heat exchange with the incoming gas and solids would decrease the heat load on the system and should be included in the design of a production facility.

3.4 Mechanical Problems

Many of the problems during the development of the fluidized bed reactor for the Fluorox process were mechanical in nature. Some of these problems were a result of the unavailability of commercial equipment for small-scale operations, which necessitated development of the components. The UF_4 was fed into the reactor by metering it into a gas stream, where it was fluidized and subsequently entered the reactor at the bottom. Much difficulty was encountered in obtaining a good gas seal on the shaft of the rotary UF_4 feeder. It was found that introduction of the feed at the bottom of the reactor was superior to introduction of a free-falling solid to the top of the reactor.

Some difficulty was encountered in keeping the bed overflow opened and free of plugging. It was found necessary to use a 1-in.-dia line at a 45° angle to the reactor with an attached vibrator.

In order to maintain continuous operation and prevent plugging of the internal porous filters, a systematic blowback system was used which alternately blew back each of 4 filters for 1 min every 8 min.

Since it was necessary to increase the particle size of the UF_4 from a very fine feed (~50% <200 mesh) to a usable fluidized bed feed (-20 +150 mesh), a process for feed preparation was also developed. It is covered in more detail in Sect. 6.0.

4.0 ALTERNATIVE OXIDATION REACTOR DESIGNS

Limited development work was done on a moving bed reactor and a flame reactor for performing the primary oxidation reaction.

4.1 Moving Bed Reactor

The initial engineering development work in the Fluorox Program was done with a moving bed reactor for the oxidation reaction.[6,7] Pelletized UF_4 was introduced concurrently with oxygen to the top of a heated (600-815°C) 4-in.-dia moving bed (Fig. 4.1). The reaction occurred in the heated section and the UF_6 was removed from the bottom as a gas in the excess oxygen stream while the by-product UO_2F_2 was removed at the bottom

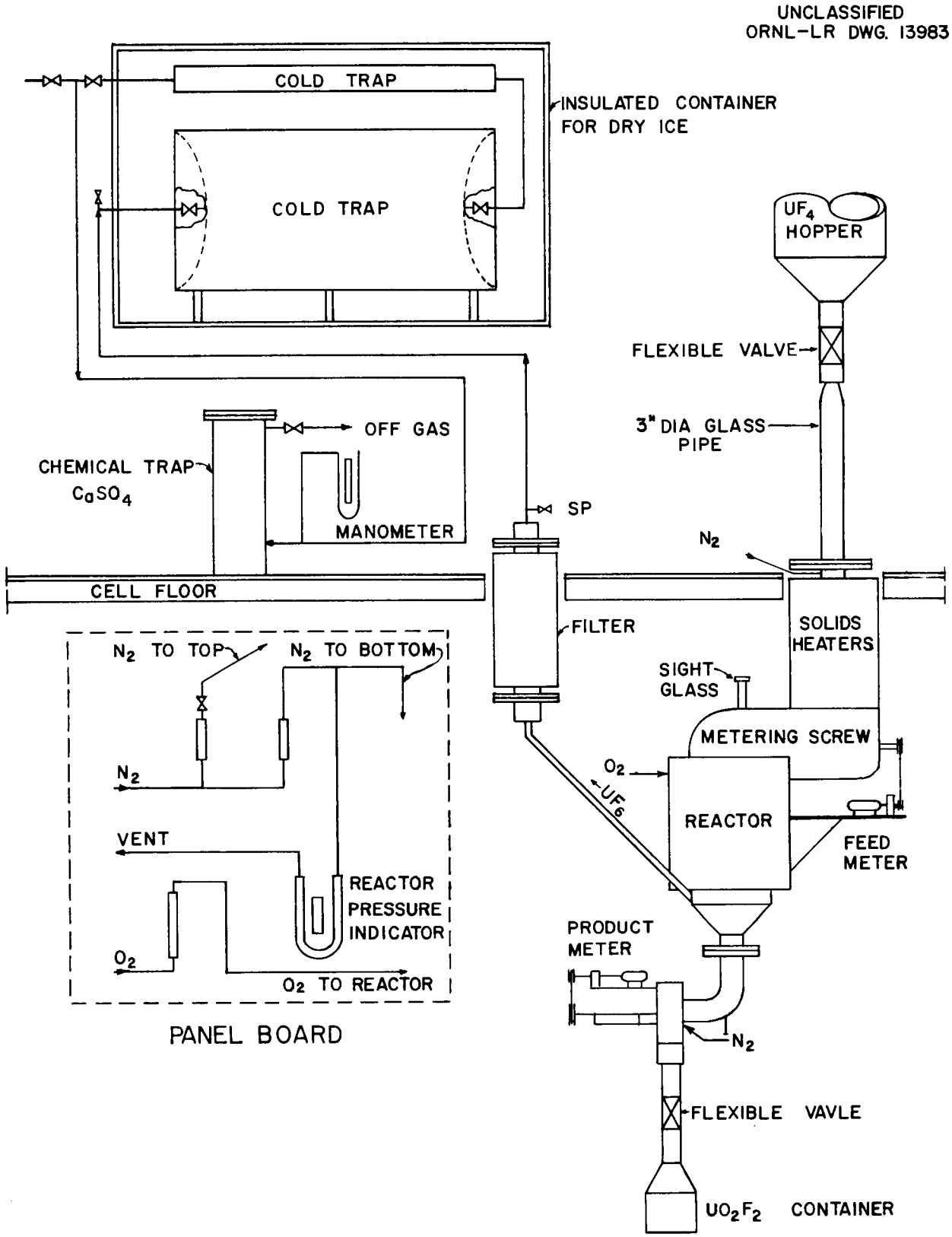

Fig. 4.1. Fluorox 4-in.-dia moving bed reactor.

of the reactor as a solid. It was found that the reaction could be accomplished on a large scale and several pounds of UF_6 was produced.

Since the heat of reaction for the oxidation is either very small or zero in the temperature range of interest, it is necessary to provide heat to the reactor for heating the incoming cool UF_4 and oxygen. In the moving bed, this heating was accomplished in two ways: (1) by heating the metal walls of the reactor, and (2) by internal combustion in the reactor itself. Both methods were tried and limited success was experienced with both. The internal combustion heating was accomplished by introducing a small amount of carbon with the UF_4 or by adding a small amount of CO with the O_2 where combustion occurred in the hot reaction zone.

The control of temperature in the moving bed was the main development problem, and lack of control was the primary reason for abandoning the moving bed work. The better control of operating conditions, not the least of which is temperature control, was the main reason for concentrating on development of a fluidized bed reactor. During the later stages of moving bed development, a U_3O_8 liner was used in the hot part of the bed. This liner appeared to form UO_2F_2 at its inner surface, and it was successful in preventing undue corrosion of the Inconel shell.

4.2 Flame Reactor

Some of the later laboratory work[11] showed that UO_2F_2 decomposed into UF_6 and uranium oxide above 900°C and that the decomposition became appreciable above 1000°C:

$$9UO_2F_2 \xrightarrow{900°C} 2U_3O_8 + O_2 + 3UF_6$$

$$3UO_2F_2 \xrightarrow{>1000°C} 2UO_2 + UF_6 + O_2$$

If this reaction could be combined with the oxidation of UF_4, the overall reaction

$$3UF_4 + O_2 \rightarrow UO_2 + 2UF_6$$

would result. Because of the temperature limitation, this reaction could not be tested in a moving or fluidized bed, but a limited amount of experimental work was done on contacting the fine UF_4 powder with oxygen in a dry CO-O_2 flame (Figs. 4.2 and 4.3). The work indicated that simultaneous oxidation of UF_4 and decomposition of UO_2F_2 would occur at the high temperature of the flame (estimated to be >2000°C). However, the problems of limited retention time of the solids in the flame and collection and separation of the resulting products were not solved.[8-10]

Although the limited development work on the flame reactor did not result in a smooth-functioning, continuous reactor, the design of the burner assembly and operating limits for flame stability were established. In tests on the complete burner assembly the flame temperature was constant throughout the first 3-4 in. but decreased further out. The flame was essentially continuous for the first 4 in. but some discontinuity existed further out in the flame and became worse with increasing length (Fig. 4.4).

UNCLASSIFIED
ORNL-LR-DWG 47787

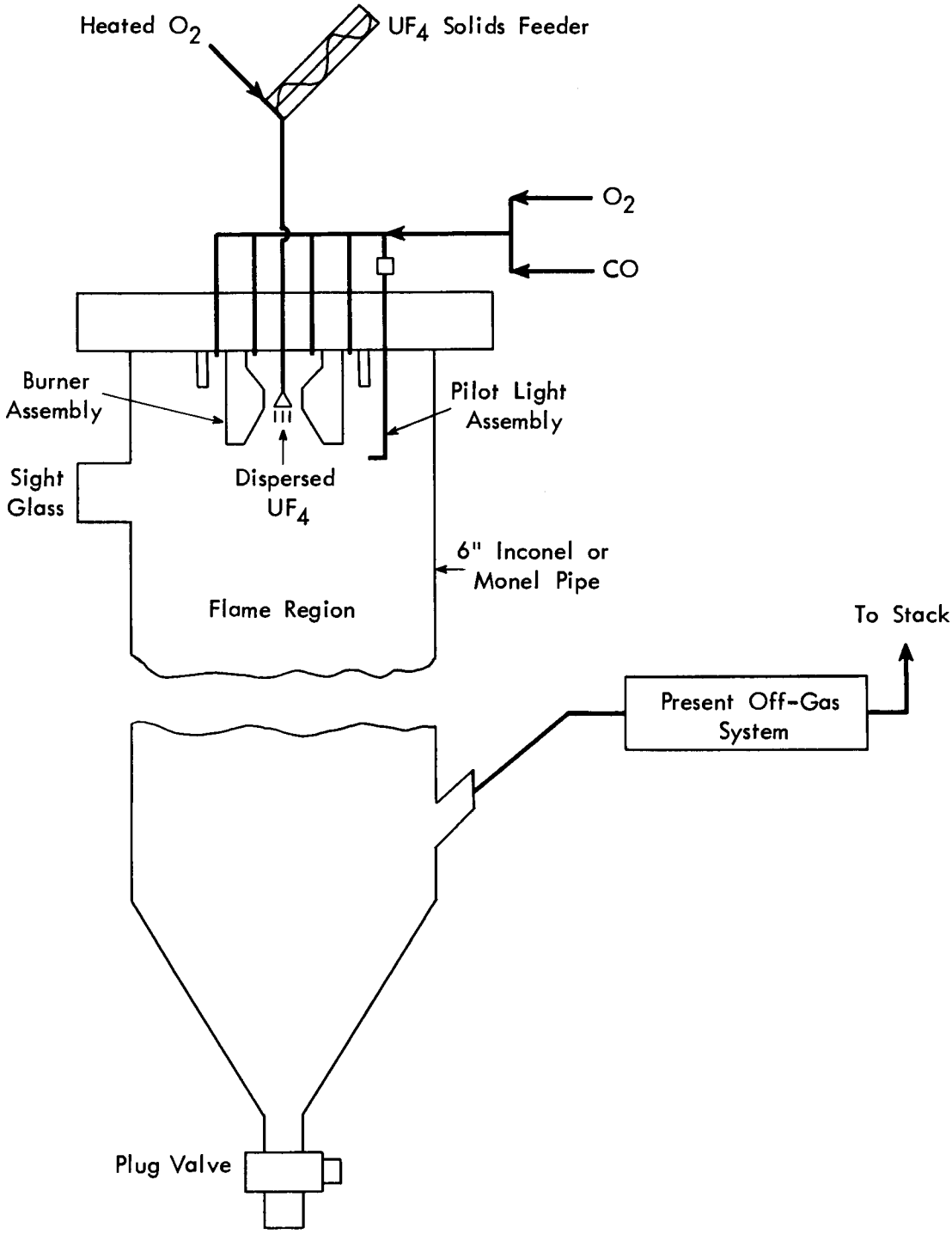

Fig. 4.2. Schematic of flame reactor.

UNCLASSIFIED
ORNL-LR-DWG 33935

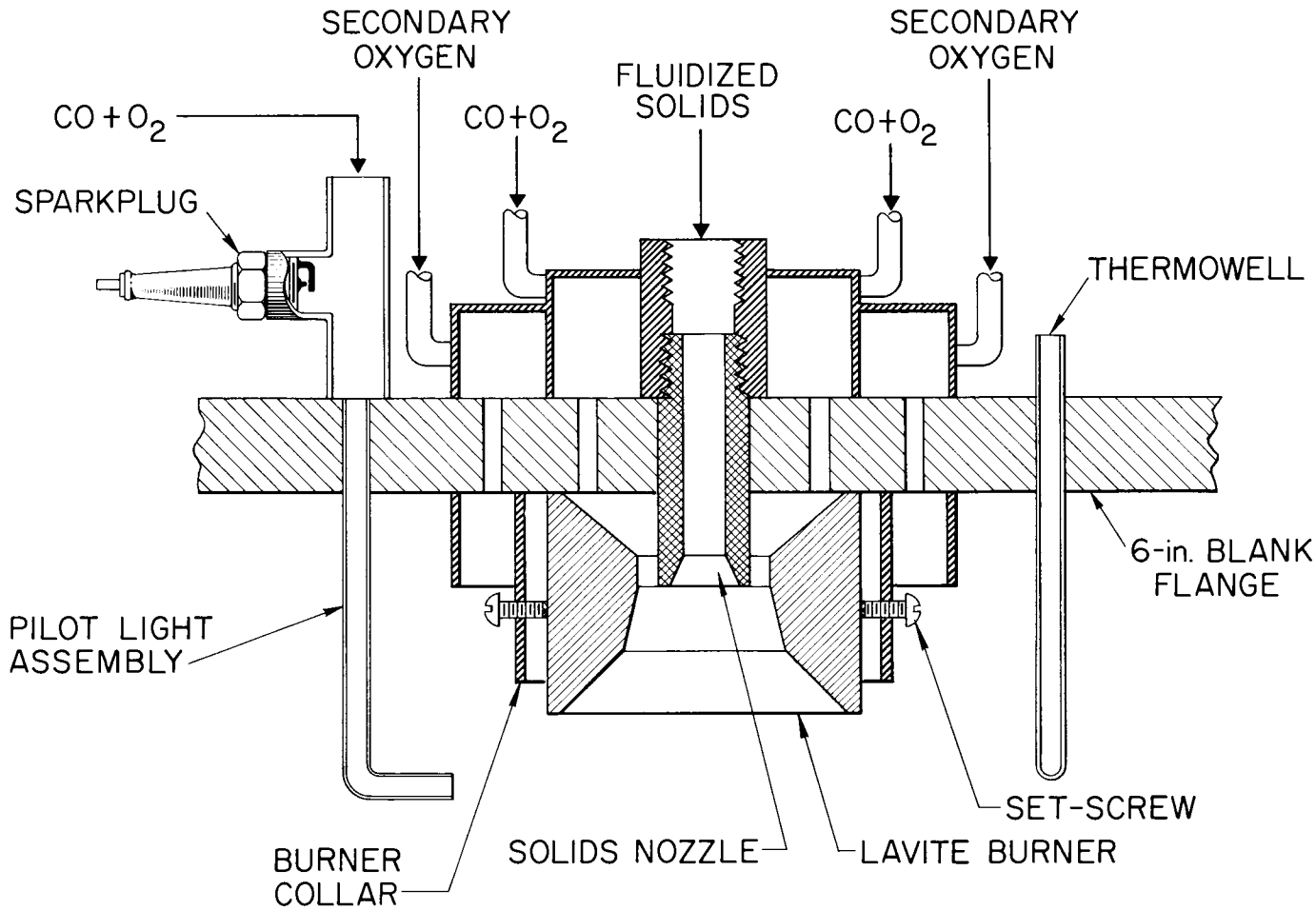

Fig. 4.3. Fluorox flame reactor burner assembly.

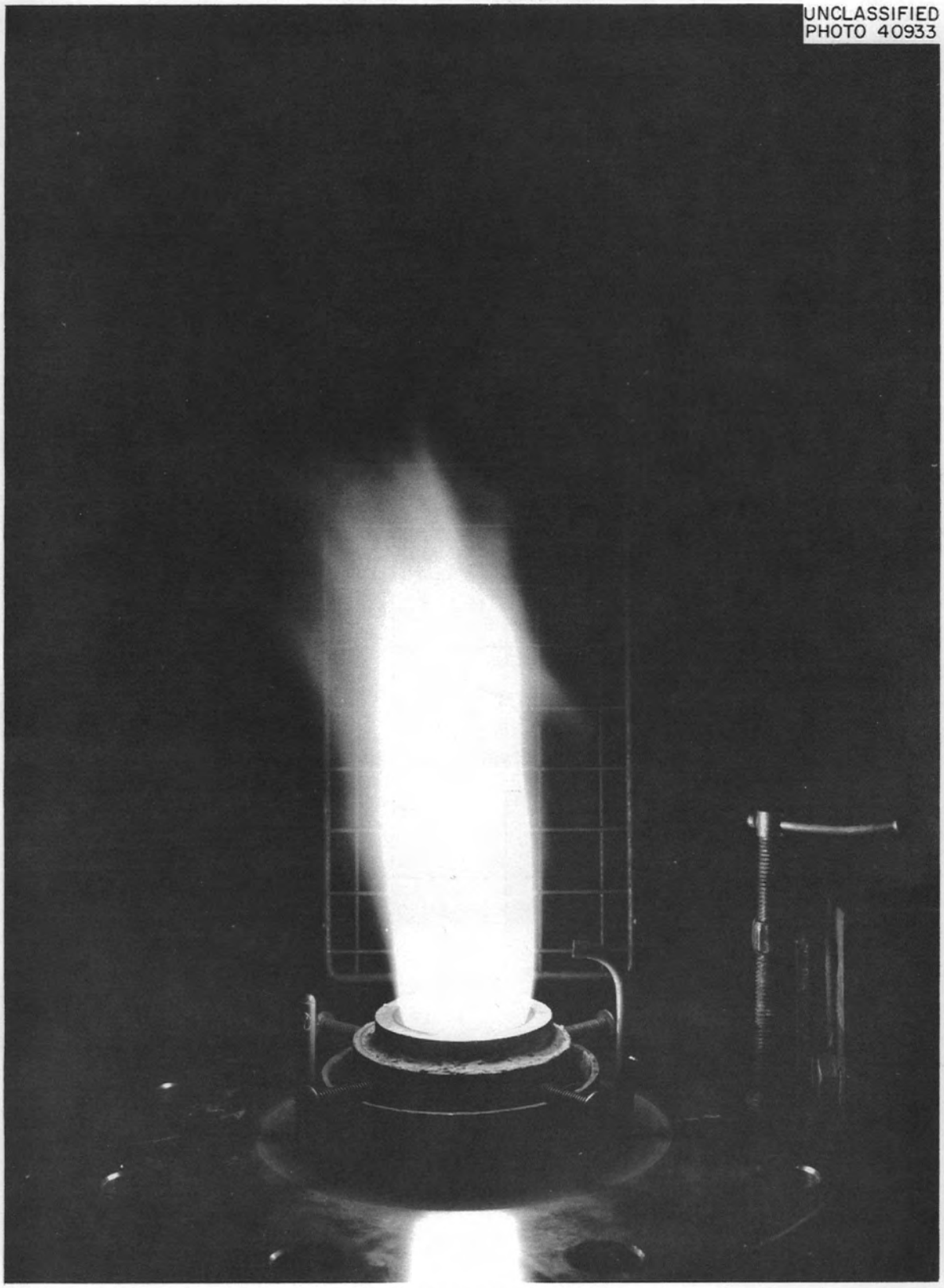

Fig. 4.4. Picture of a typical $CO-O_2$ flame from the Fluorox flame reactor burner assembly.

At constant total gas flows, increasing the CO concentration increased both the flame temperature and the flame length (Figs. 4.5 and 4.6). At constant CO concentrations, an increase in total gas flow generally increased the flame length while the flame temperature remained essentially constant.

Flashback occurred in the burner when the gas burning rate exceeded the gas velocity at the burner annulus. The CO concentration in the fuel at different total gas flows that caused flashback varied from 47% CO at 3.0 scfm to 62% CO at 6.1 scfm (Fig. 4.7). As long as the CO concentration was kept below these values, in the range of flows investigated, flashback did not occur. It is conceivable that an excessive total gas flow or very small CO concentration could cause the flame to blow off the burner, but the gas rates and CO concentrations necessary for this were not within the ranges tested.

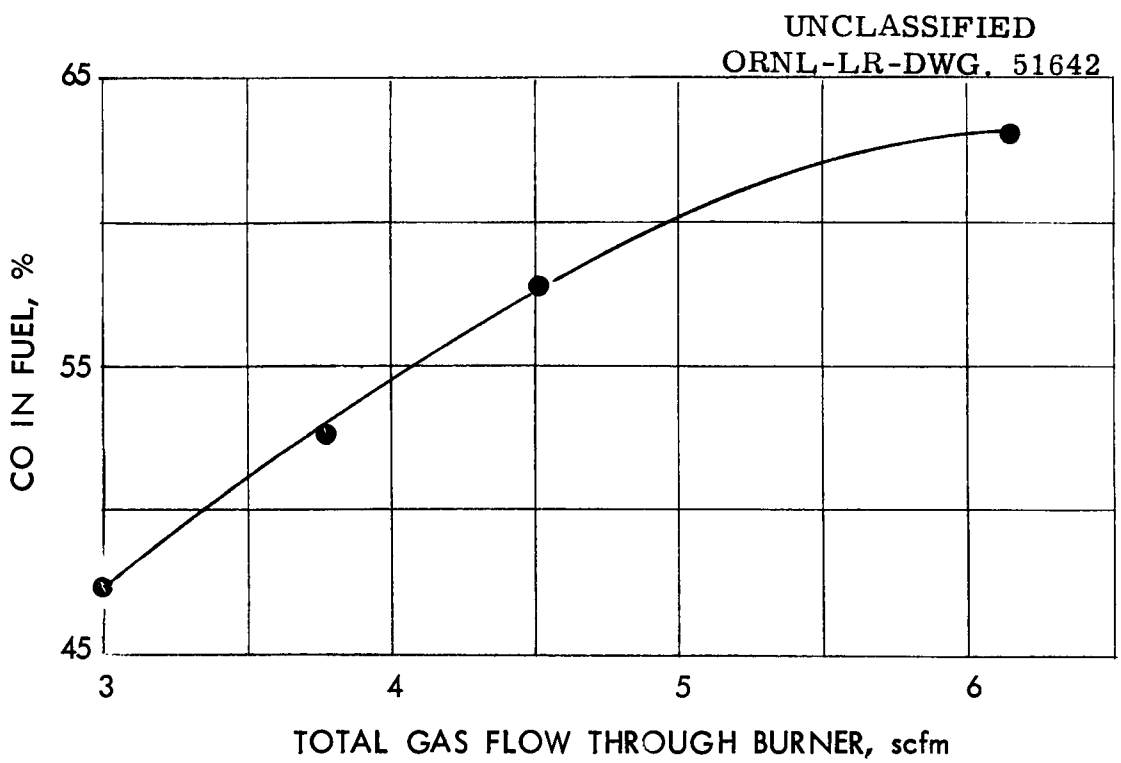

Fig. 4.7. CO concentration in fuel in which flashback occurs at specific total gas flows.

UNCLASSIFIED
ORNL-LR-DWG 47786

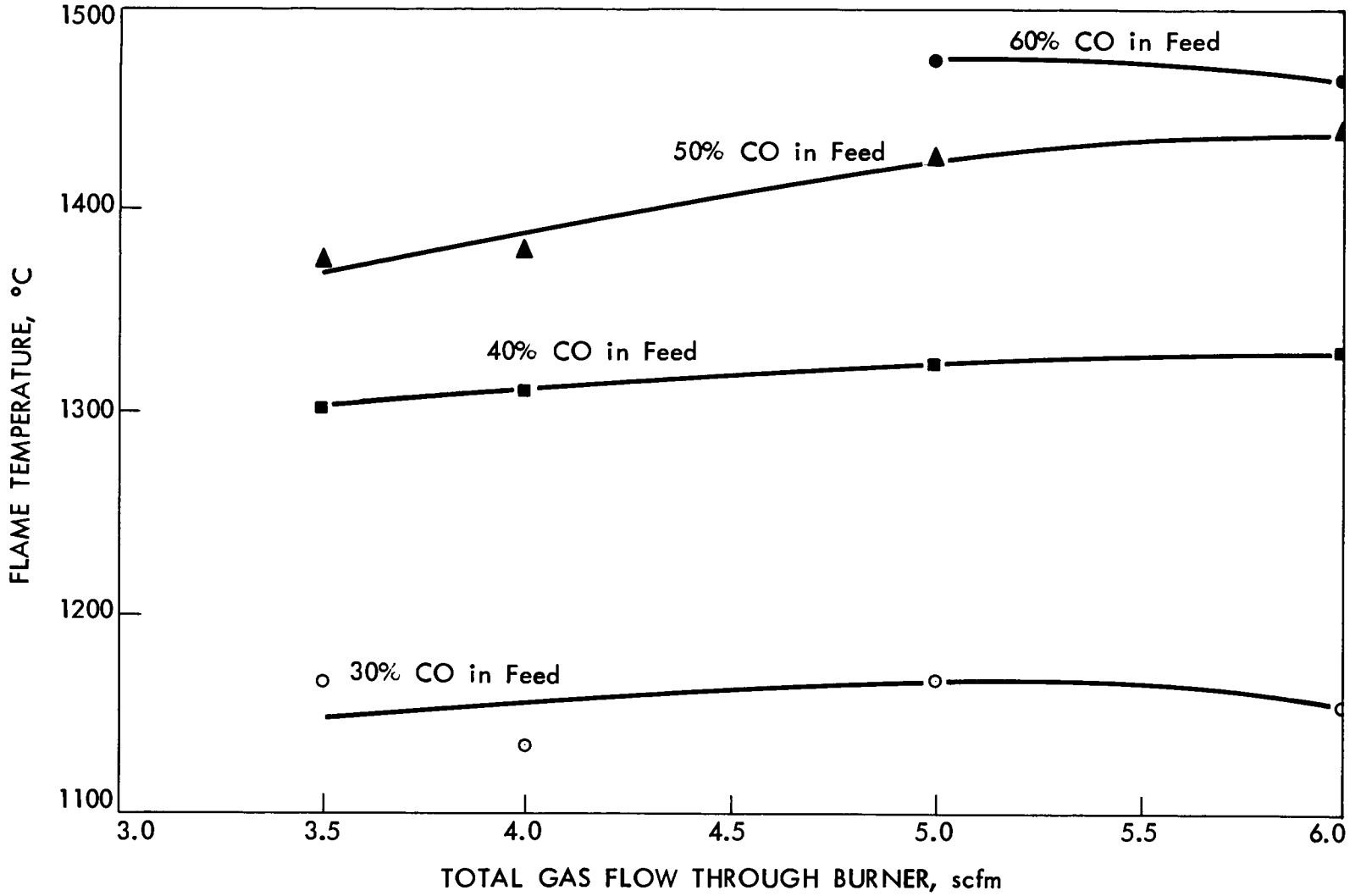

Fig. 4.5. Effect of total gas flow on flame temperature at various CO concentrations.

UNCLASSIFIED
ORNL-LR-DWG 47785

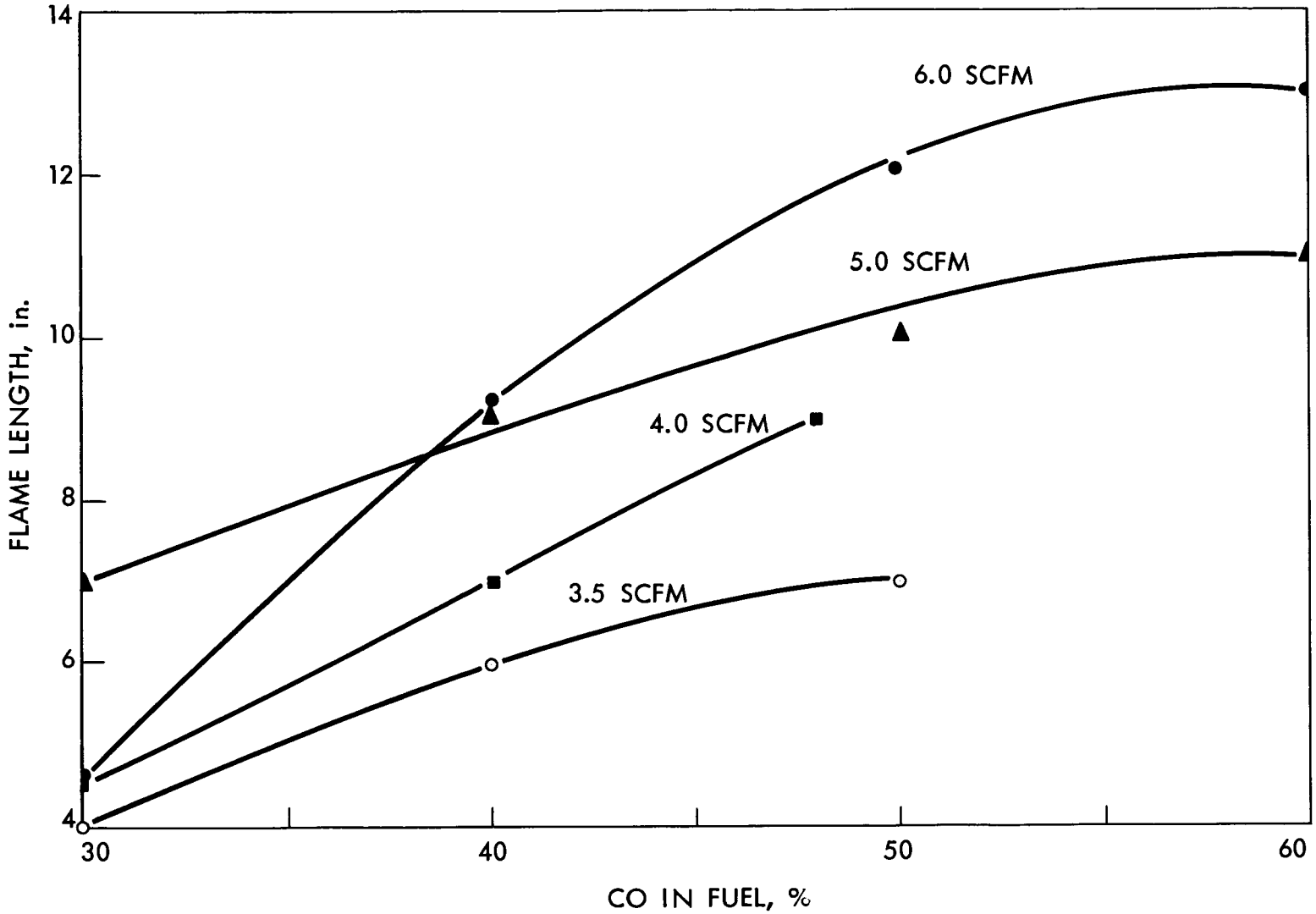

Fig. 4.6. The effect of CO concentration on flame length at various total gas flows.

5.0 EXPERIMENTAL RESULTS FROM FLUIDIZED BED REACTOR

Both batch and continuous feed fluidized bed experimental runs were made. The batch runs were made in a 3-in.-dia 24-in. high Inconel reactor, while the continuous runs were made in a 4-in.-dia Inconel reactor. The results indicated that the Fluorox oxidation reaction, $2UF_4 + O_2 \rightarrow UO_2F_2 + UF_6$, is feasible on an engineering scale and that UF_6 production greater than 90% of theoretical may be expected. The optimum conditions for the operation appear to be (1) a UF_4 concentration of less than 20% in the bed, (2) a bed temperature of 800-850°C, (3) a superficial fluidizing gas velocity of 0.5 to 0.75 ft/sec, (4) the use of UF_4 feed with <0.5% foreign impurities, and (5) either dry air or oxygen for the fluidizing gas.

5.1 Batch Runs

All the early fluidized bed work was done in a 3-in.-dia Inconel fluidized bed reactor (Fig. 5.1).[8,10,17,18] This reactor system consisted of approximately 24 in. of 3-in. Sch 40 Inconel pipe which reduced to 1 in. at the bottom and was flanged at the top. The reactor was heated and insulated for 16 in. of its height, and there were provisions for introducing the fluidizing gas through an Inconel screen at the bottom of the reactor as well as a bed sampling port. The off-gas left the reactor and was filtered by external porous metal filters, after which the UF_6 product was removed in a large cold trap.

In the batch runs, UF_4 was charged to the reactor as a batch, after which it was heated while being fluidized with nitrogen. After the desired bed temperature was reached, the oxygen fluidizing medium was replaced by nitrogen, and the run was continued. Analytical samples of the bed material before, during, and after the run made it possible to evaluate the different operating conditions, determine the amount of reaction, and determine a reaction rate constant at the various temperatures of operation.

Several operational difficulties were encountered. At high concentrations of UF_4 in the bed at the start of the run, the bed tended to agglomerate by sintering, and at wall temperatures above 850°C solid material accumulated on the walls. In a few runs the whole bed sintered into a single mass. The reactor was ultimately destroyed when the bed sintered and a hot spot developed on the wall which allowed melting of the UF_4 and finally rupture of the wall.

Another problem was formation of the intermediate uranium fluorides UF_5, U_2F_9, and U_4F_{17} by reaction of UF_4 with the UF_6. These were formed in large quantities when the bed was rich in UF_4 (at the start of a batch run). After formation, the intermediate fluorides tended to leave the reactor by volatilization or entrainment and to solidify and settle out in the off-gas lines and external filter where they slowly decomposed to UF_4 and UF_6.

In all but one run, heat was added to the reactor through the walls by resistance heating. This heating technique always produced a high wall

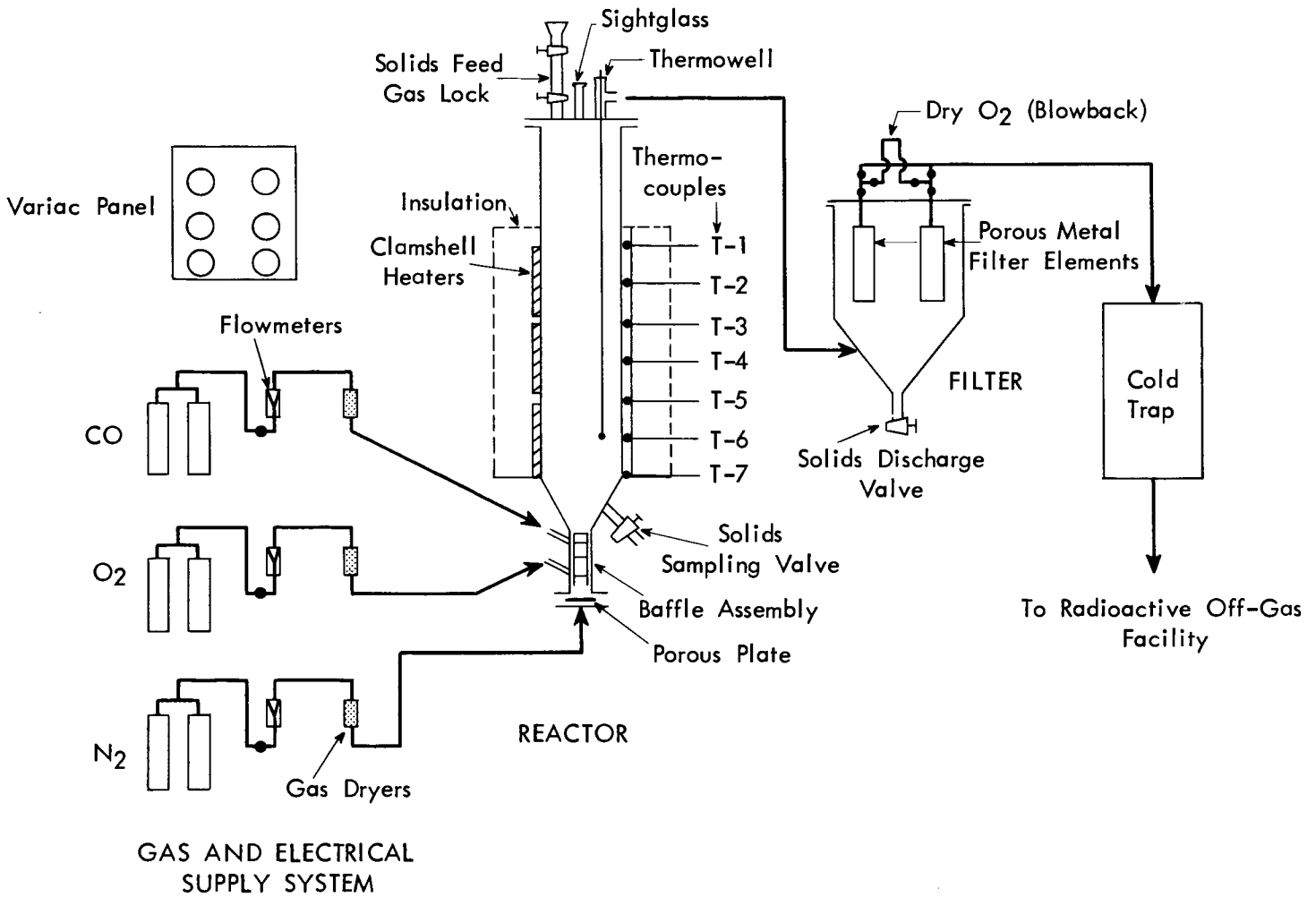

Fig. 5.1. Fluidized bed reactor system, 3-in.-dia bed.

temperature, which tended to build up solids on the wall by sintering or melting and cause high corrosion rates. One attempt was made to heat the bed internally by addition of CO to the fluidizing gas which would undergo combustion in the fluidized bed. In one run, the bed temperature was maintained at 800-840°C for short periods by combustion of CO in the bed.

The results of 10 batch runs (Table 5.1) in the 3-in.-dia reactor made it possible to determine pseudo first order reaction rate constants in the temperature range 575-735°C. These constants varied from 0.01 to 0.586 hr^{-1} and were generally lower than the rate constants determined in the laboratory for the same temperature range. In general, the material balances across the system for each run were fair, but UF_6 product yields were not determined directly.

Table 5.1. Results from Batch Fluidized Bed Reactor Runs in 3-in.-dia Reactor

Run No.	Operating time, hr	Avg. Temp., °C	Initial Bed Charge, g	UF_4 Conc. in Bed, % Initial	UF_4 Conc. in Bed, % Final	Apparent Reaction Rate Constant, hr^{-1}
1	6.0	575	3000	76.7	73.0	0.010
2	1.9	690	3000	80.4	70.2	0.026
3	0.5	733	3000	80.3	65.1	0.218
4	26.4	650	3000	82.7	35.0	0.013
5	7.2	720	3000	77.5	53.6	0.071
7	2.5	720	3500	77.5	30.4	0.248
8	0.3	735	4500	53.2	29.1	0.577
9	0.5	690	3600	29.1	25.1	0.195
9A	0.9	730	3600	13.2	2.6	0.0755
9B	0.3	730	3600	2.6	1.3	0.586

5.2 Continuous Runs

Description of System. A few short, semicontinuous runs were attempted in the 3-in.-dia reactor by intermittent batch feeding; however, the bulk of the continuous fluidized bed work on the oxidation reaction was done in a 4-in.-dia Inconel reactor (Figs. 5.2 and 5.3).

The main body of the reactor was made from a 24-in. section of Sch 40 4-in.-dia Inconel pipe. The top of the reactor expanded to a 6-in.-dia section and the bottom reduced to a 1-in.-dia pipe. A 1-in.-dia overflow line was located 13-1/2 in. above the bottom of the 4-in.-dia section. UF_4 introduction was through a 1/2-in. Inconel line which ran from the UF_4 metering device to the bottom of the reactor, the fluidizing gas was introduced to the bottom of the reactor, and the 6-in.-dia expanded section contained

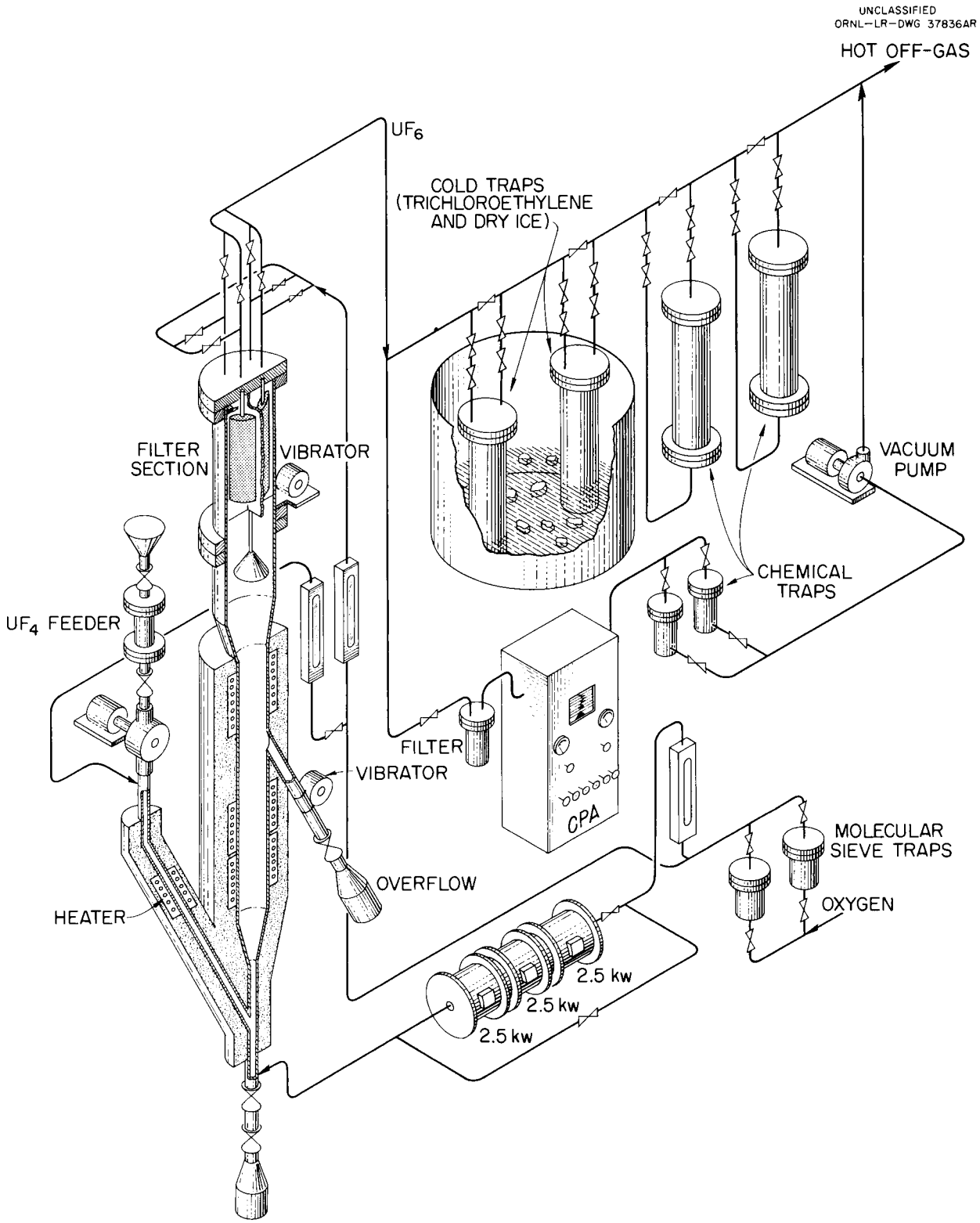

Fig. 5.2. Fluorox 4-in.-dia fluidized bed reactor system.

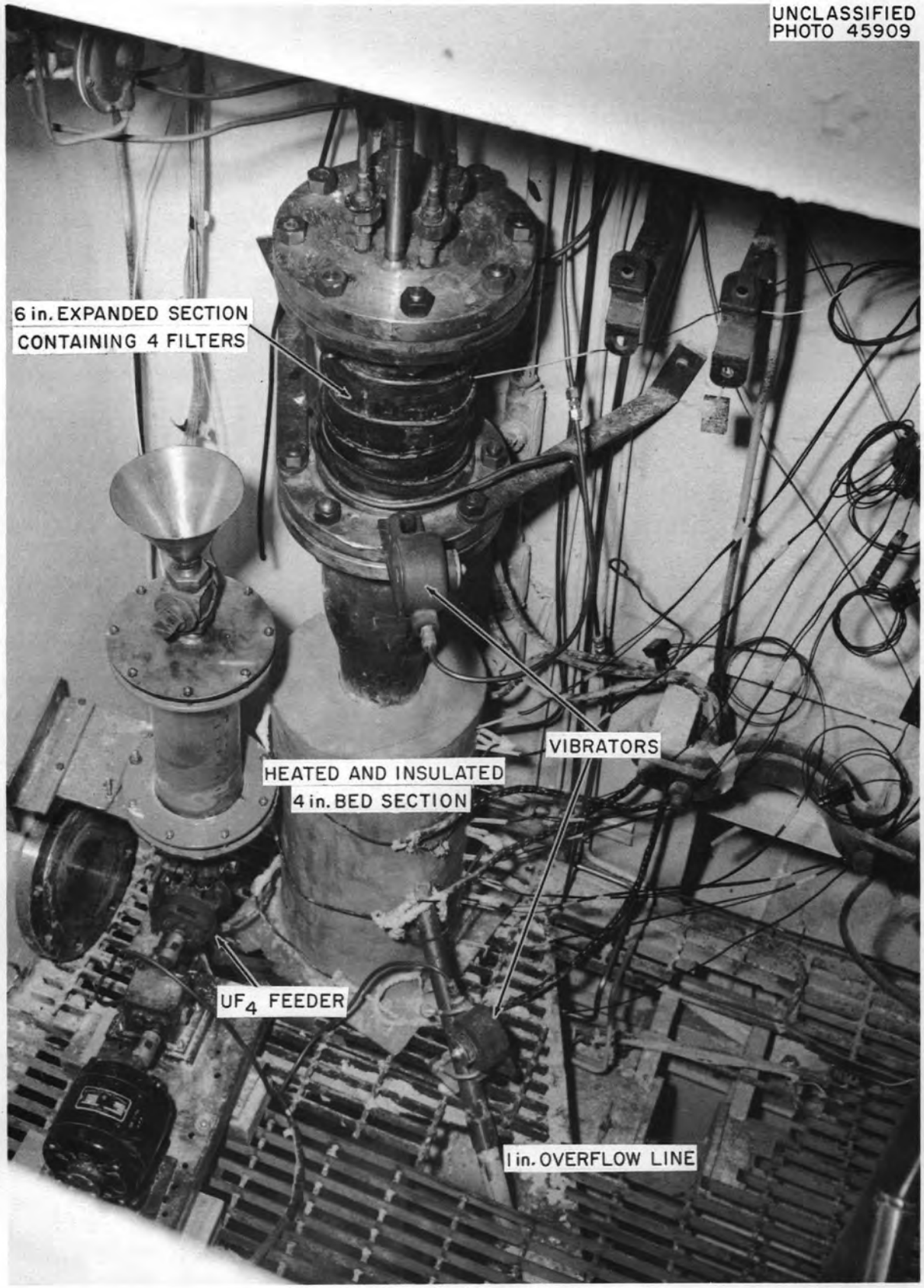

Fig. 5.3. 4-in-dia fluidized bed reactor.

four porous metal filters (Fig. 5.4) through which the off-gas was filtered. Automatic blowback of each filter with O_2 returned accumulated solids to the fluidized bed. Vibrators were attached to the filter housing and the overflow line. The reactor proper was heated by external resistance heaters and insulated by 2 in. of high-temperature insulation up to within 2 in. of the expanded section.

The fluidizing gas was first dried with Molecular Sieves to a dew point of approximately -100°F and was then metered through preheaters prior to entering the reactor.

UF_4 was metered by a liquid gear pump adapted for solids flow, and the metered UF_4 was fluidized by a portion of the fluidizing gas and heated externally prior to its introduction to the bottom of the reactor.

A solids overflow line maintained a constant level of fluidized material in the reactor. The line emptied into a container which was replaced periodically during each run. This replacement also allowed solids sampling during the run.

From the reactor off-gas the UF_6 product was recovered in 8-in.-dia copper cold traps (Fig. 5.5) immersed in a trichloroethylene--dry ice bath. Residual UF_6 was removed in chemical traps containing $CaSO_4$, and the remaining gas was finally exhausted to the plant radioactive off-gas facility. In some runs the UF_6 concentration in the off-gas stream was measured by passing a part of the untreated off-gas through a condensation pressure analyzer, developed at the Oak Ridge Gaseous Diffusion Plant by C. W. Weber and W. S. Pappas.[19]

Experimental Procedure. In the continuous runs the bed was initially charged with cold UO_2F_2 and the bed was fluidized while the reactor and contents were heated to the proposed operating temperature. Heat was introduced both through the reactor wall and by preheating the fluidizing gas. When the operating temperature was reached, the oxidizing gas, which was also used as the fluidizing gas, was introduced to the reactor, and the continuous UF_4 feed was started. When UF_4 was being fed, the off-gas was diverted through the cold traps and chemical traps and a small stream of off-gas was sent through the off-gas analyzer. The overflow material, which was essentially of the same composition as the whole bed, was removed periodically and samples were taken for analysis.

The continuous fluidized bed runs were made in the temperature range 700-860°C, with feed rates ranging from 0.3 to 1.7 kg/hr. Superficial fluidizing gas velocities of 0.5-0.8 ft/sec were used, and both feed materials grade (UF_4 with a small fraction of foreign impurities) and crude UF_4 were used. Dry air and dry oxygen were used as the fluidizing and oxidizing gas.

Results with Refined UF_4. Refined or feed materials grade UF_4 feed was used in most of the experimental work. The UF_4 content of the feed varied from 91.0 to 98.7%, with the bulk of the rest of the material being UO_2F_2, UO_2, and U_3O_8 with a small amount of water.

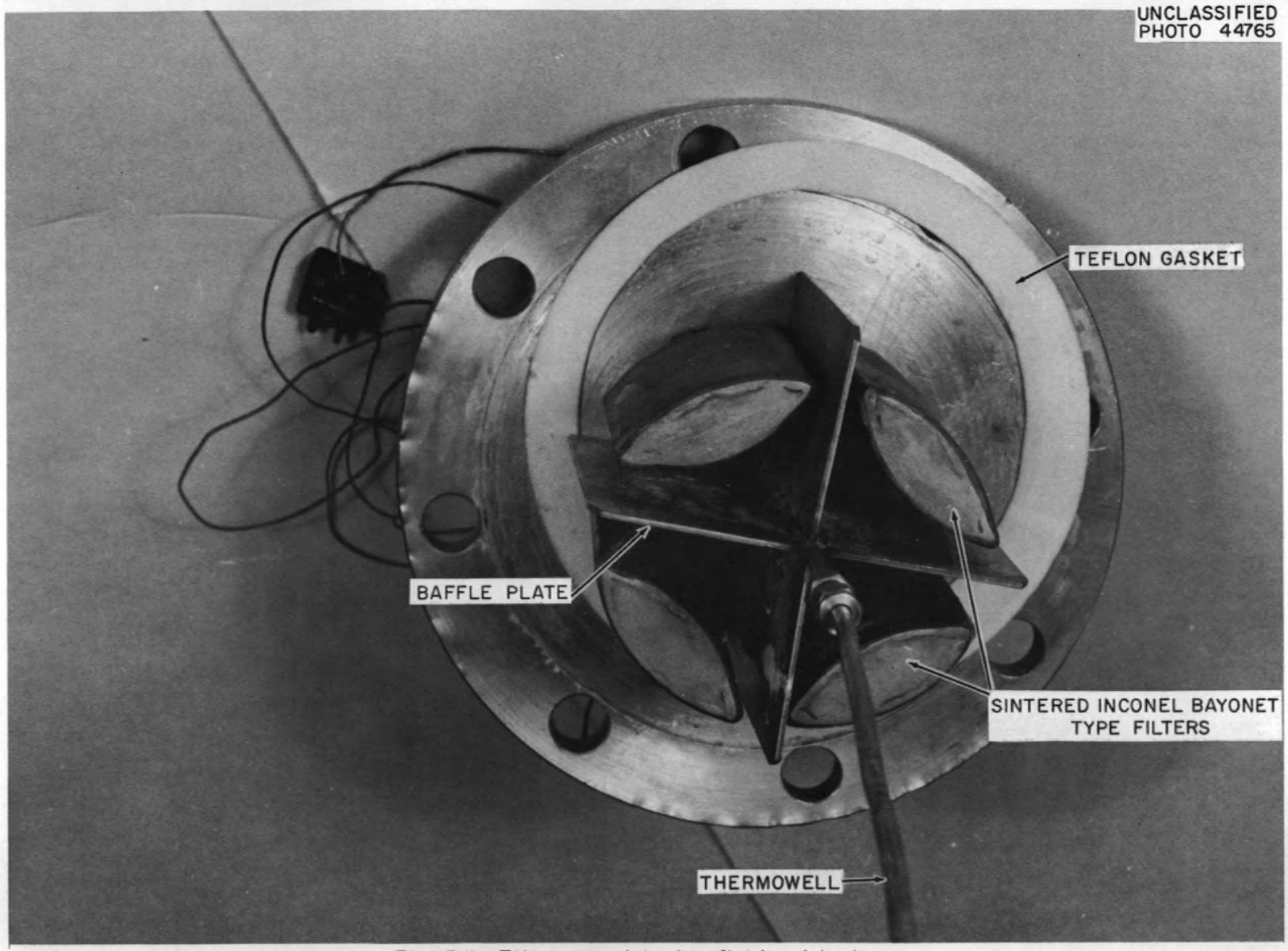

Fig. 5.4. Filters in 4-in-dia fluidized bed reactor.

UNCLASSIFIED
ORNL-LR-DWG 47784

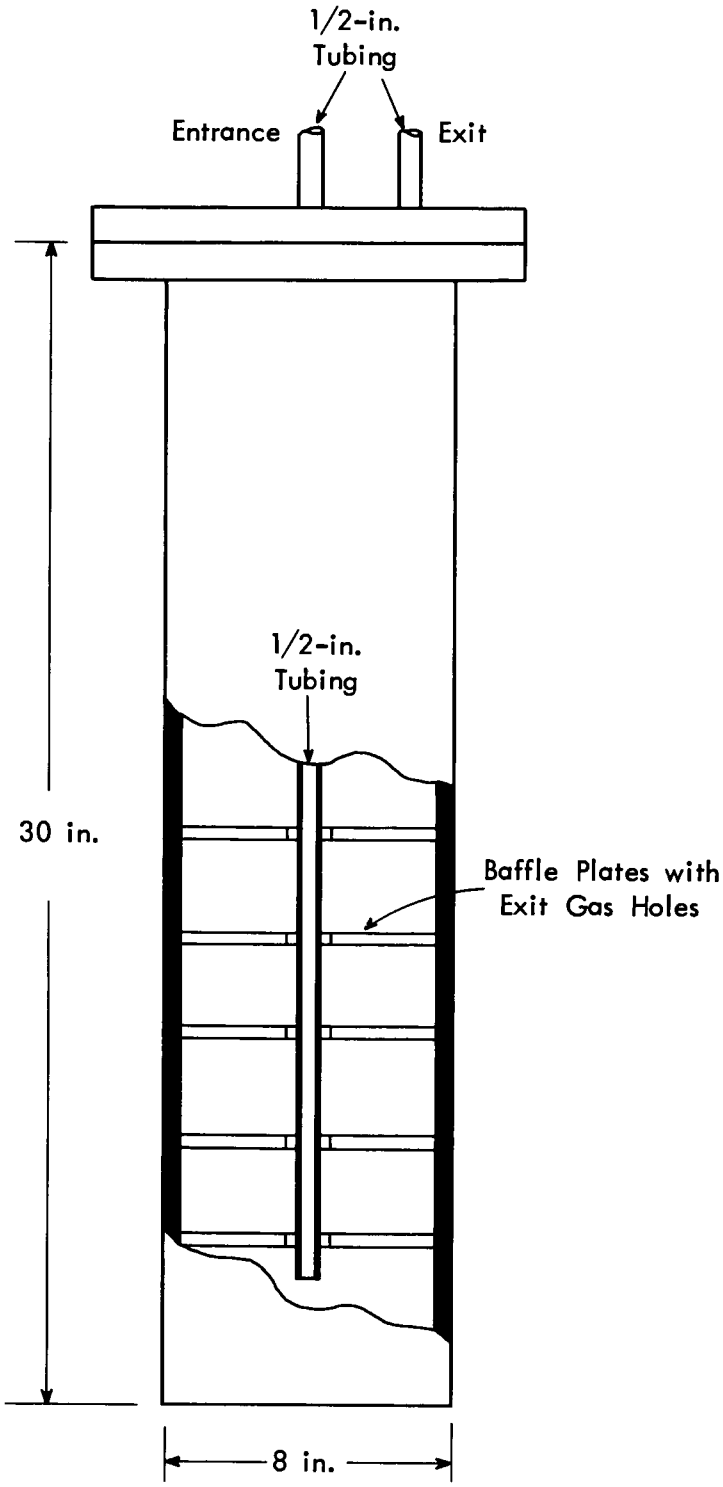

Fig. 5.5. Eight-inch-diameter copper cold trap for UF_6 product collection in Fluorox fluidized bed process.

Fluidizing gases used for the runs with refined UF_4 were both dry oxygen and air. Both of the bases were effective, but the apparent reaction rate with air was less than that with oxygen, as would be expected with a lower oxygen partial pressure.

In the eight continuous runs made with refined UF_4, average fluidized bed temperatures of 800-850°C were used, and the maximum length of a run was 56.8 hr (Table 5.2).

UF_6 formation as determined by off-gas measurement or collection in cold traps and chemical traps varied from 40.0 to 92.6% of the theoretical amount of UF_6 expected. The total UF_6 balances for these runs were, in general, very high (98.4-103.3%), as were overall material balances (99.4-105.2%).

Samples from the bed overflow and the reactor off-gas indicated that the reactor system reached approximate steady-state operation after 1-2 hr (Fig. 5.6). UF_6 concentrations in the off-gas were 1 to 5%, and UF_4 concentrations in the bed of 1 to 21% were maintained without trouble. Oxygen utilizations were 1 to 10%.

Run FBR-22, which lasted 56.8 hr, was made to demonstrate the feasibility of continuous operation. Results showed that the system was suitable for long-term continuous operation. During this run 33.8 kg of UF_6 product was collected in the cold traps.

Reaction rate constants for all the approximate steady-state periods of operation were obtained in each run. In general, these values were somewhat higher than comparable laboratory data; however, scatter of both laboratory and continuous fluidized bed reactor data covered the same general area. An Arrhenius plot, neglecting surface area, of the batch fluidized bed reactor data had a slope similar to that from the laboratory data but slightly depressed, while the continuous fluidized bed reactor data produced a plot with slightly greater slope but with the better agreement in the temperature range 750-800°C (Fig. 5.7). From this information, it was felt that the available reaction rate data are sufficient for scaleup design of large reactors.

In the UF_6 balance for each run, the amounts of UF_6 product lost to the various side reactions were determined by chemical analysis. In a typical run (FBR-21) the UF_6 balance was 98.4% (Fig. 5.8), with 92.6% of the theoretical yield being measured in the reactor off-gas and 5.8% consumed in the side reactions, 4.2% in the water reaction, 1.4% in the corrosion reaction, and 0.2% in the reaction with uranium oxides introduced with the feed.

Several samples of the UF_6 product were analyzed both chemically and spectrographically to measure impurities and one sample of the UF_6 produced during the extended run, FBR-21, was sent to the Oak Ridge Gaseous Diffusion Plant for a specification analysis. In general, the UF_6 produced met purity requirements except for slightly high amounts of molybdenum, silicon, and

Table 5.2. Results from Continuous and Semicontinuous Fluidized Bed Reactor Runs in 3- and 4-in.-dia Reactors

Run No.	Fluidizing and Oxidizing Gas	Operating, time, hr	Avg. Temp., °C	Avg. Feed Rate, g/hr	Avg. Bed Inventory, g	Max. Bed UF_4 Conc., wt %	Avg. Reaction Rate Constant, hr^{-1}	Material Balance, %		UF_6 Measured or Collected, % of theoretical
								Total[a]	UF_6[b]	
13[c]	O_2	13	800	390	9500	11.7	3.24	-	-	40.0
15[c]	O_2	2	800	454	7264	-	-	-	-	44.3
16[c]	O_2	12.2	800	597	9638	1.3	5.38	100.8	99.8	67.3
17	O_2	5.5	800	710	8195	4.2	2.1	105.2	103.3	64.9
18	O_2	12.2	825	1113	5840	0.9	25.7	95.9	98.7	72.9
19	O_2	15.8	850	1182	5930	2.6	22.7	101.7	97.0	70.8
21	Air	9.3	810	1370	5025	21.9	1.29	100.4	98.4	92.6
22	O_2	58.4	815	1600	6690	4.5	8.80	99.4	99.2	90.4
23[d]	O_2	13.5	723	341	7492	4.73	1.30	97.2	85.3	17.9
24[d]	O_2	29.5	710	309	6793	5.37	0.39	94.8	54.6	17.9

[a](Material out)/(material in).

[b]UF_6 accounted for/theoretical amount of UF_6.

[c]Continuous UF_4 feed with batch buildup of bed.

[d]Crude UF_4 feed.

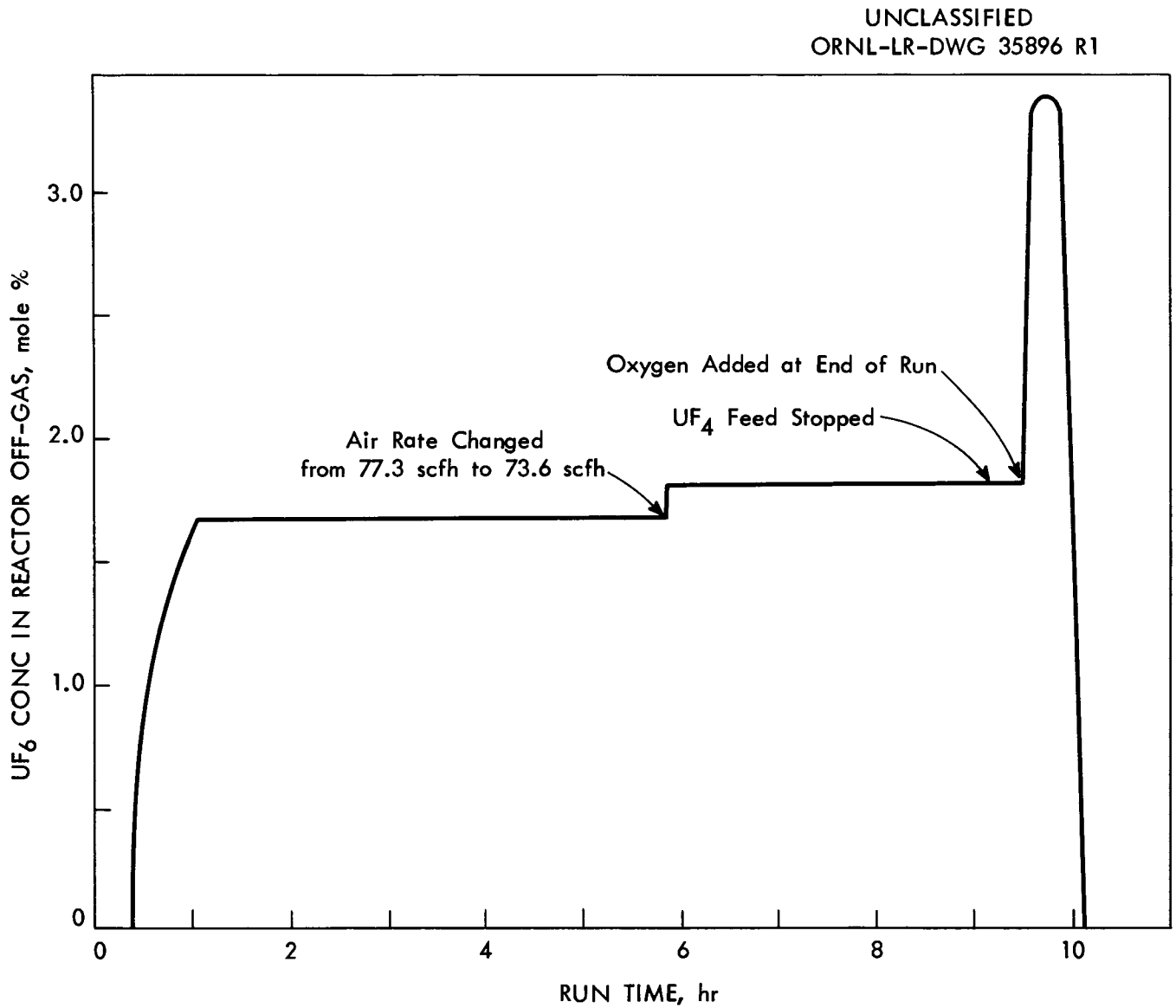

Fig. 5.6. Typical UF_6 concentration in reactor off-gas during a continuous fluidized bed run as measured by condensation pressure analyzer. UF_4 feed started at zero time.

UNCLASSIFIED
ORNL-LR-DWG 37898 R1

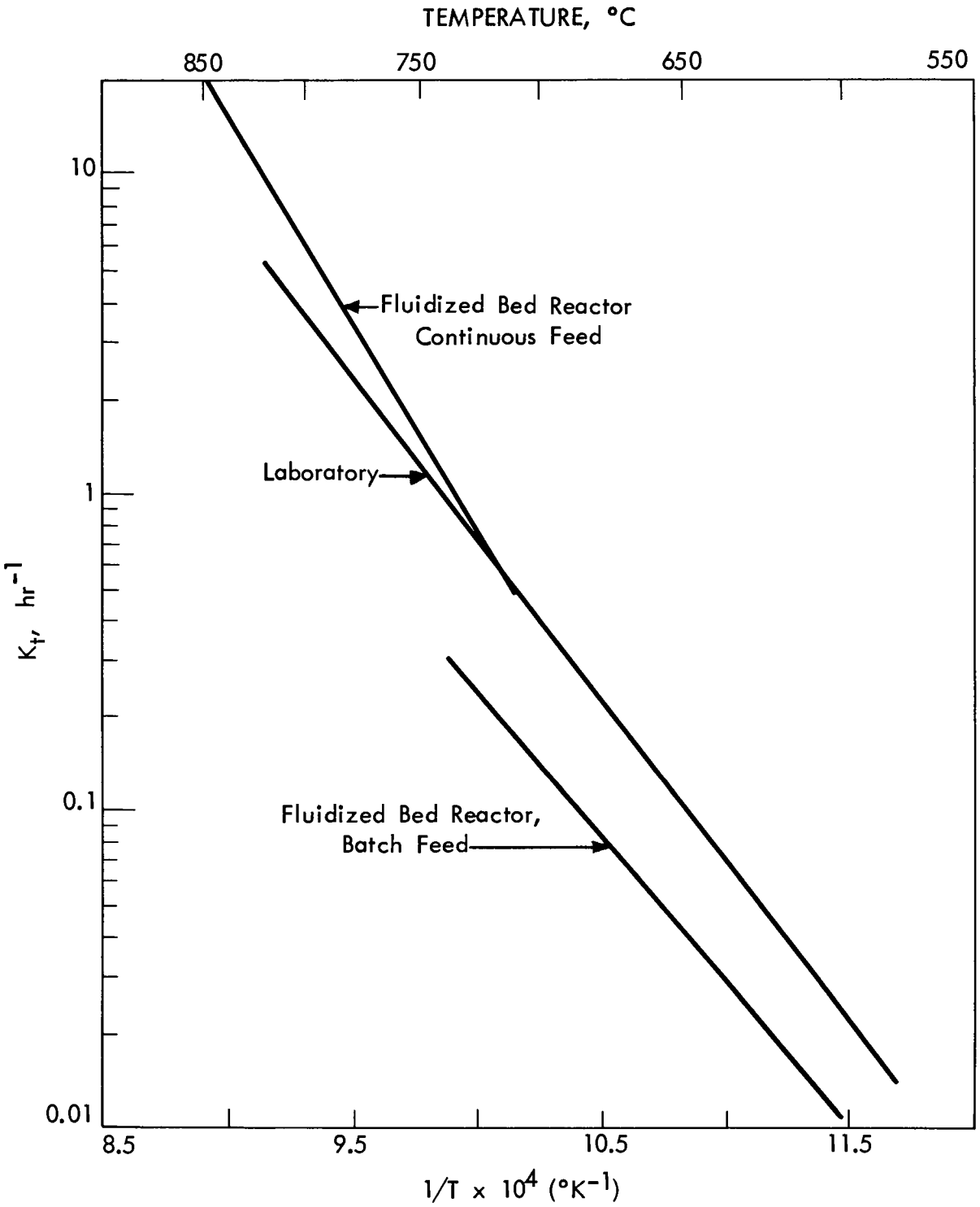

Fig. 5.7. Comparison of reaction rate constants for the reaction $2\ UF_4 + O_2 = UO_2F_2 + UF_6$. Determined from laboratory and fluidized bed reactor data.

UNCLASSIFIED
ORNL-LR-DWG 35898A

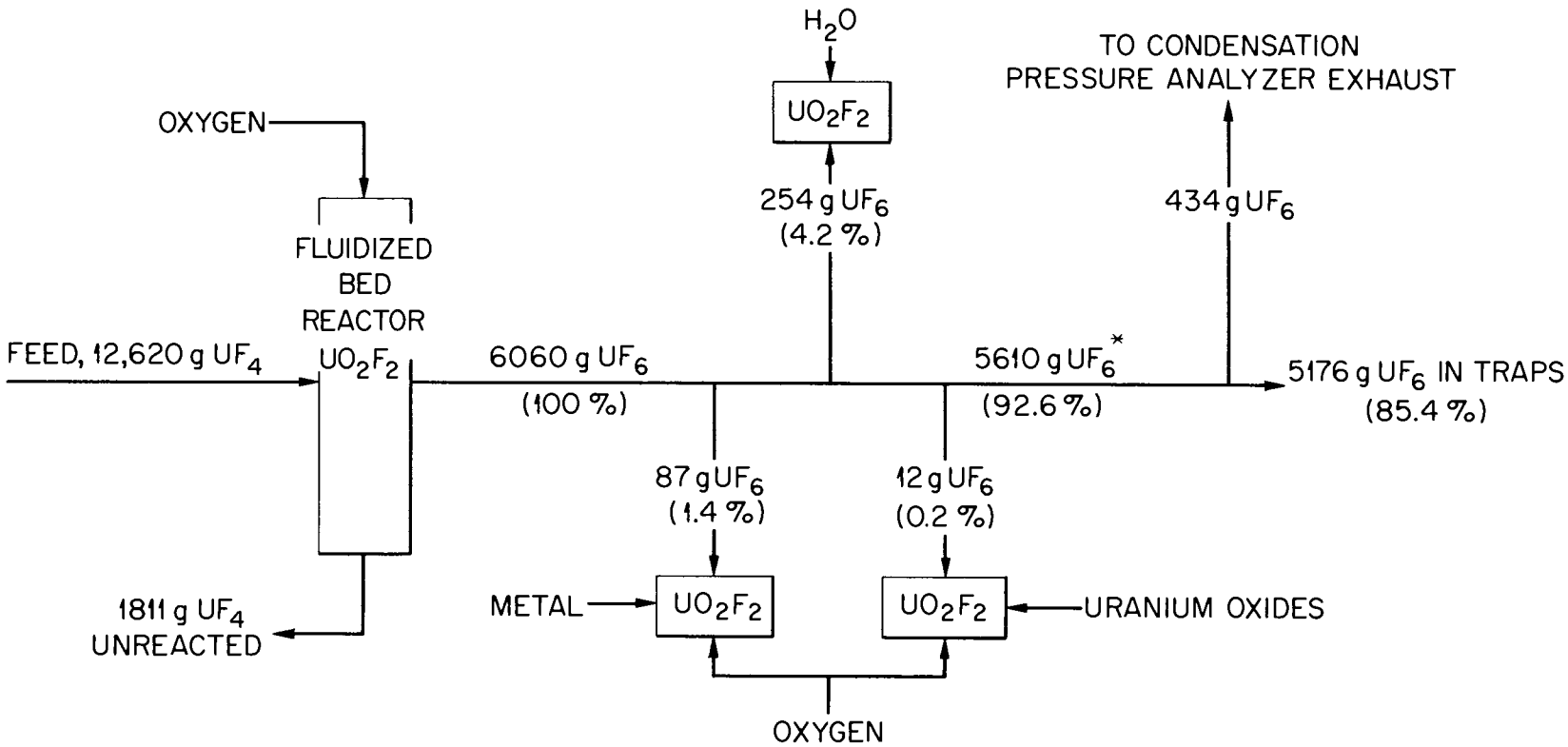

*UF_6 MEASURED IN REACTOR OFF-GAS STREAM BY CONDENSATION PRESSURE ANALYZER

TOTAL UF_6 ACCOUNTED FOR = 5529 g OR 91.2 % OF THEORETICAL (BASED ON UF_6 ACTUALLY TRAPPED FROM OFF-GAS STREAM)

= 5963 g OR 98.4 % OF THEORETICAL (BASED ON UF_6 MEASURED IN REACTOR OFF-GAS BY CONDENSATION PRESSURE ANALYZER)

Fig. 5.8. Disposition of UF_6 which was formed in run FBR-21.(CPA=condensation pressure analyzer)

chromium and some excess HF in one sample (Table 5.3). The excess HF was trapped out with the UF_6 because of the low temperature of the cold trap (-75°C). With higher temperature conventional cold traps, the UF_6 would probably also meet HF content requirements. A better quality feed would also decrease the amount of metal fluoride impurities.

Corrosion rates on Inconel were determined in two different ways: (1) by measuring the corrosion of the thermowell, reactor wall, and attached corrosion coupons within the fluidized bed and (2) by measuring the increase of metal fluorides, other than uranium, in the system and equating this to a corrosion rate. The corrosion rates determined by measuring metal fluoride increase varied over a relatively small range, 0.145-0.442 ipy, for temperatures of 800 to 850°C. Corrosion rates obtained by measuring change in metal thickness of thermowells and corrosion coupons varied from <0.1 to 0.7 ipy (Table 5.4). In general, if operating conditions during the run were well controlled and if there were no high-temperature excursions, the corrosion rates were measured in the range <0.1-0.3 ipy.

As a comparison, the 3-in.-dia batch reactor, in which 16 runs were made at temperatures of 575 to 850°C for a total operation time of 212 hr with frequent thermal cycling and loss of protective scale, had a maximum corrosion of 0.700 ipy as determined from measuring the wall thickness of the reactor. Corrosion was maximum in the fluidized bed section where it was fairly uniform except for a 4-in. section in the middle of the reactor where some pitting occurred. The corrosion in the vapor phase was less by a factor of 10 (Fig. 5.9).

A stable scale (0.01 to 0.02 in. thick), composed of metal fluorides and metal oxide corrosion products and various uranium compounds from the bed, formed on the reactor wall. During operation, the scale was stable and it may have prevented severe corrosion. The severe thermal cycles that occurred during frequent short runs in the experimental program caused the scale to crack, allowing additional corrosion.

Results with Crude UF_4. Two runs were made in the 4-in.-dia fluidized bed system with crude UF_4 (prepared from unpurified mill concentrate) as the feed material. This material contained up to 10 wt % impurities (Table 5.5) which resulted in relatively low melting (~730°C) and sintering (~690°C) points. Because of these properties it was necessary to operate the fluidized bed at temperatures in the range 700-725°C and at low feed rates (Table 5.2).

UF_6 was produced from this material, but the product was highly contaminated with volatile fluorides (mainly vanadium, chromium, and HF). The vanadium fluorides came from impurities in the UF_4 feed; the chromium came from corrosion of the Inconel reactor; and the HF resulted from the high H_2O content of the feed (0.35 wt %). Corrosion of the Inconel reactor was prohibitive in both runs, forcing shutdown. Maximum corrosion rates were approximately 5 ipy, and the corrosion was very uneven with some severe pitting (Fig. 5.10).

Table 5.3. Analysis of UF_6 Product from Fluidized Bed Runs

Impurity	Impurities, ppm		
	Sample X-25	Sample X-38	Sample ORGDP-113
Al	10	5	-
B	-	-	<0.1
Br	-	-	<1
Ca	15	11	-
Cl	-	-	38
Cr	20	12	60
Cu	8	3	-
Fe	125	95	-
Mg	16	11	-
Mo	-	-	2
Ni	45	55	-
P	-	-	<30
Si	-	-	118
V	-	-	<1
Total nonvolatile	-	-	250

Table 5.4. Apparent Corrosion Rate of Inconel in the Fluorox Fluidized Bed

Run No.	Total Exposure Time, hr	Temp., °C	Method of Measurement	Max. Corrosion Rate, ipy
1-16	212	575-850	Measurement of reactor wall, 3-in.-dia reactor	0.350
13-16	37	800-850	Metallographic examination of the thermowell	0.700
18	18	800-850	Analysis of metal fluoride content of solids	0.442
19	21	800-860	Metallographic examination of thermowell	<0.100[a]
21	14	800-830	Analysis of metal fluoride content of solids	0.145
22	66	800-920	Same	0.289
22	66	800-920[b]	Metallographic examination of corrosion samples	0.700

[a]Lower limits of measurement.
[b]In this run there was one severe temperature excursion to 920°C.

UNCLASSIFIED
PHOTO 43392

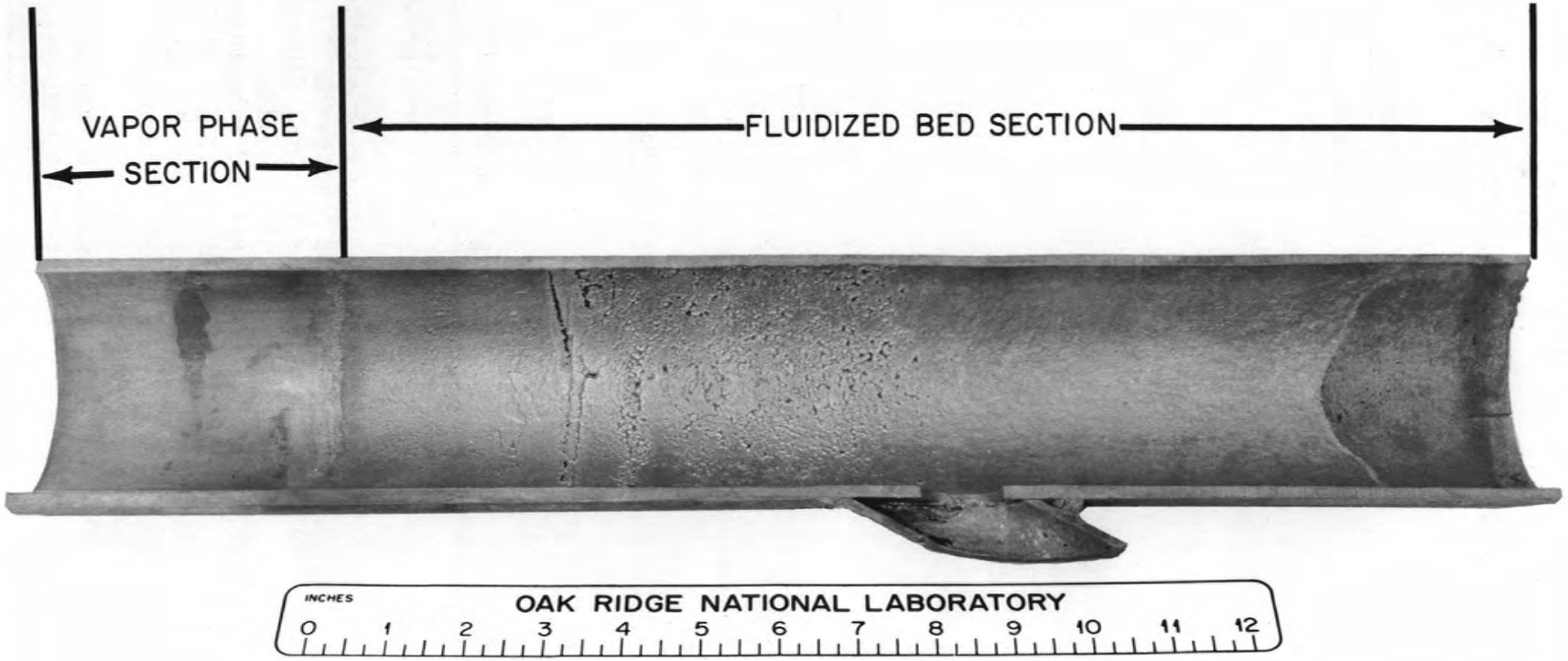

Fig. 5.9. Sectioned 3-in-dia fluidized bed reactor after 212 hr of operation.

Table 5.5. Chemical Analysis of the Crude UF_4 Used as Fluidized Bed Feed

Constituent	Amount, %	Possible Composition, %, of Crude UF_4 as determined from Chemical Analysis	
U	69.09		
U(IV)	68.1	UF_4	83.50
U soluble	3.05	UO_2F_2	3.95
U in AOI	2.74	UO_2	3.11
Al	0.03	AlF_3	0.10
Ca	1.18	CaF_2	2.30
Cu	0.13	CuF_2	0.20
Fe	2.42	FeF_3	4.89
Mg	0.03	MgF_2	0.08
Na	0.94	NaF	1.72
Ni	0.02	NiF_2	0.03
V	0.42	VOF2	0.81
H_2O	0.34	H_2O	0.34
		Total	101.03

This type of UF_4 feed could be used only if a suitable material of construction can be found. In the temperature range 700-725°C, nickel might be suitable, but oxidation rates would be so low that reactor capacities would be severely limited.

5.3 Determination of UF_4 Feed Rate

The calculated feed rate to the Fluorox fluidized bed reactor is dependent on (1) the characteristics of the feed, (2) the UF_4 concentration to be maintained in the bed, and (3) the reaction rate constant which is dependent on temperature and feed characteristics. The following equation was developed to calculate the feed rate, F g/hr, needed to maintain a steady-state operation, as a function of the important variables:

$$F = \frac{K_t CW\ (1-0.51\ C)}{U - 0.49\ UC - IC - NC}$$

where K_t is the reaction rate constant, hr^{-1}; W is the bed weight, g; C is the weight fraction of UF_4 in the bed; U is the weight fraction of UF_4 in the feed; I is the weight fraction of inert impurities in the feed; and N is the equivalent weight fraction of the feed which results in solids from reaction of other impurities in the feed with UF_6.

UNCLASSIFIED
PHOTO 46496

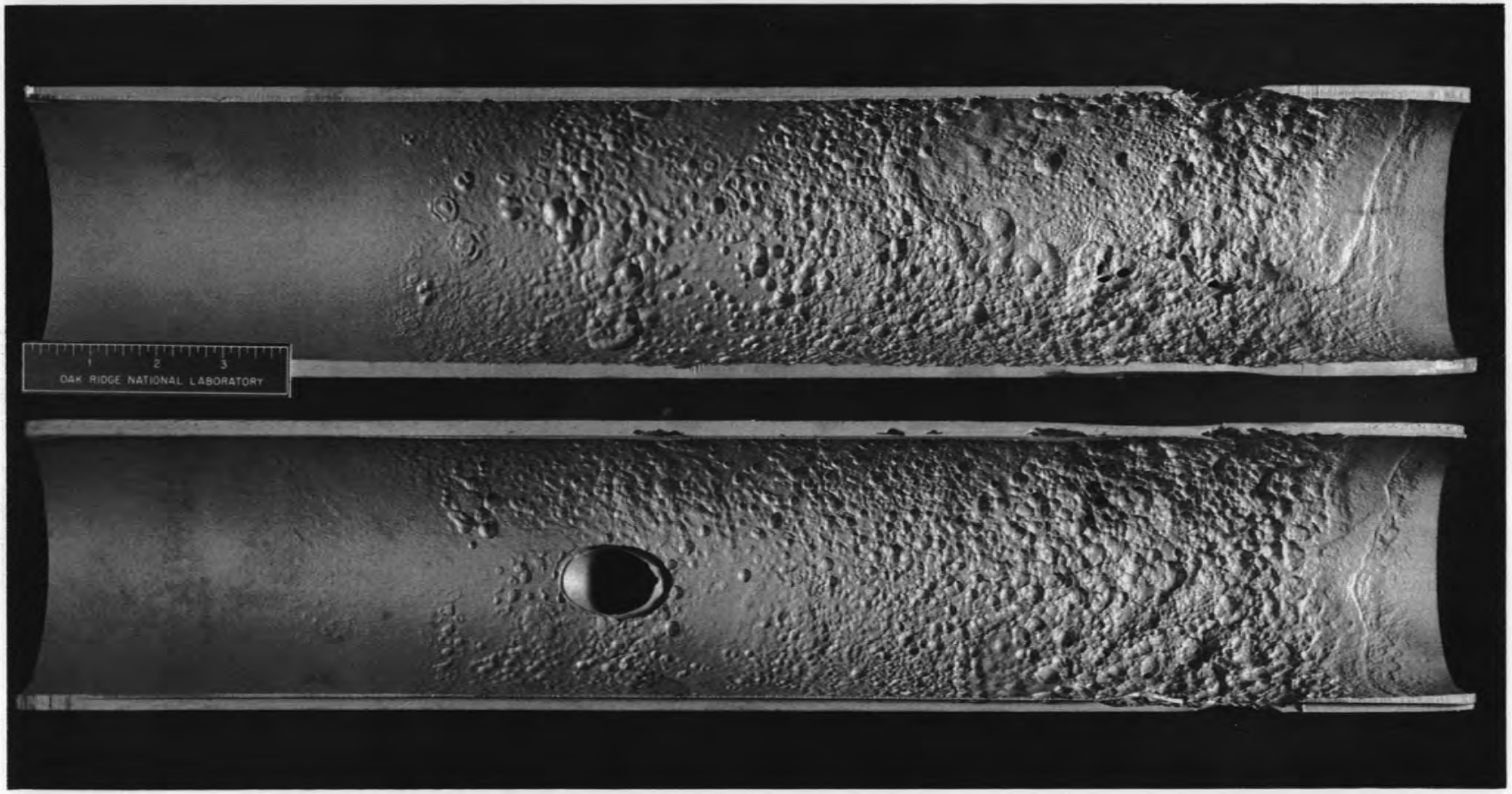

Fig. 5.10. Sectioned 4-in-dia fluidized bed reactor after contact with crude UF_4 at 700-725°C for 24 hr.

6.0 FLUIDIZED BED FEED PREPARATION

The feed material for the Fluorox fluidized bed reactor may be in the proper size range (approximately -20 +150 mesh) as a result of preparation in previous fluidized bed operations. However, if the feed is obtained as finely divided material, a feed preparation step may be necessary to up-grade the particle size to a usable range. The most straightforward method developed for this up-grading was a two-step process: (1) compaction or agglomeration of the fine UF_4 to +20 mesh and (2) size reduction to the proper feed size range (-20 mesh +150 mesh).

The best method of UF_4 compaction tried for feed that was 30-50% <150 mesh was by a compacting machine made by the W. J. Fitzpatrick Company called a "Chilsonator" (Fig. 6.1). This machine is composed of two spring-loaded corrugated rolls, which run in opposite directions, and the necessary solids feeding device. Up to 20% of the fine UF_4 feed, at a rate of about 600 lb/hr, could be compacted to +20 mesh per pass. The usable +20 mesh material was separated by a vibrating screen and the fines were recycled through the compactor.

The granulation was accomplished by a Stokes granulator, which reduced the +20 mesh material to approximately 90% in the range -20 +150 mesh.

Figure 6.2 shows a typical development process flowsheet and material balance for the feed preparation of UF_4 that was initally 50% <150 mesh. Additional development work would probably produce a more efficient feed preparation scheme, and additional work on reactor development may make it possible to increase the usable size range of the fluidized bed reactor feed so that the requirements for feed preparation will not be so stringent.

7.0 RECYCLE OF UO_2F_2

At least 50% of the uranium in the UF_4 oxidation with oxygen results in UO_2F_2:

$$2UF_4 + O_2 \rightarrow UO_2F_2 + UF_6$$

A method of recycling UO_2F_2 to produce a UF_4 feed stream is therefore needed.

7.1 Chemistry

The optimum recycle process consists of two steps: (1) reduction to UO_2 ($UO_2F_2 + H_2 \rightarrow UO_2 + 2HF$) and (2) hydrofluorination of the UO_2 to UF_4 ($UO_2 + 4HF \rightarrow UF_4 + 2H_2O$). The overall recycle reaction is: $UO_2F_2 + H_2 + 2HF \rightarrow UF_4 + 2H_2O$. Laboratory investigation of the hydrogen reduction of UO_2F_2 to UO_2 indicated that the rate-controlling process was diffusion. There was no doubt that the rate of chemical reaction would be sufficiently high for its use in the recycle scheme, provided that a contactor such as a fluidized bed reactor was used which would minimize diffusion resistance.[12]

The hydrofluorination of UO_2 to UF_4 is a well-known production process and sufficient information is available for design purposes.[20,21]

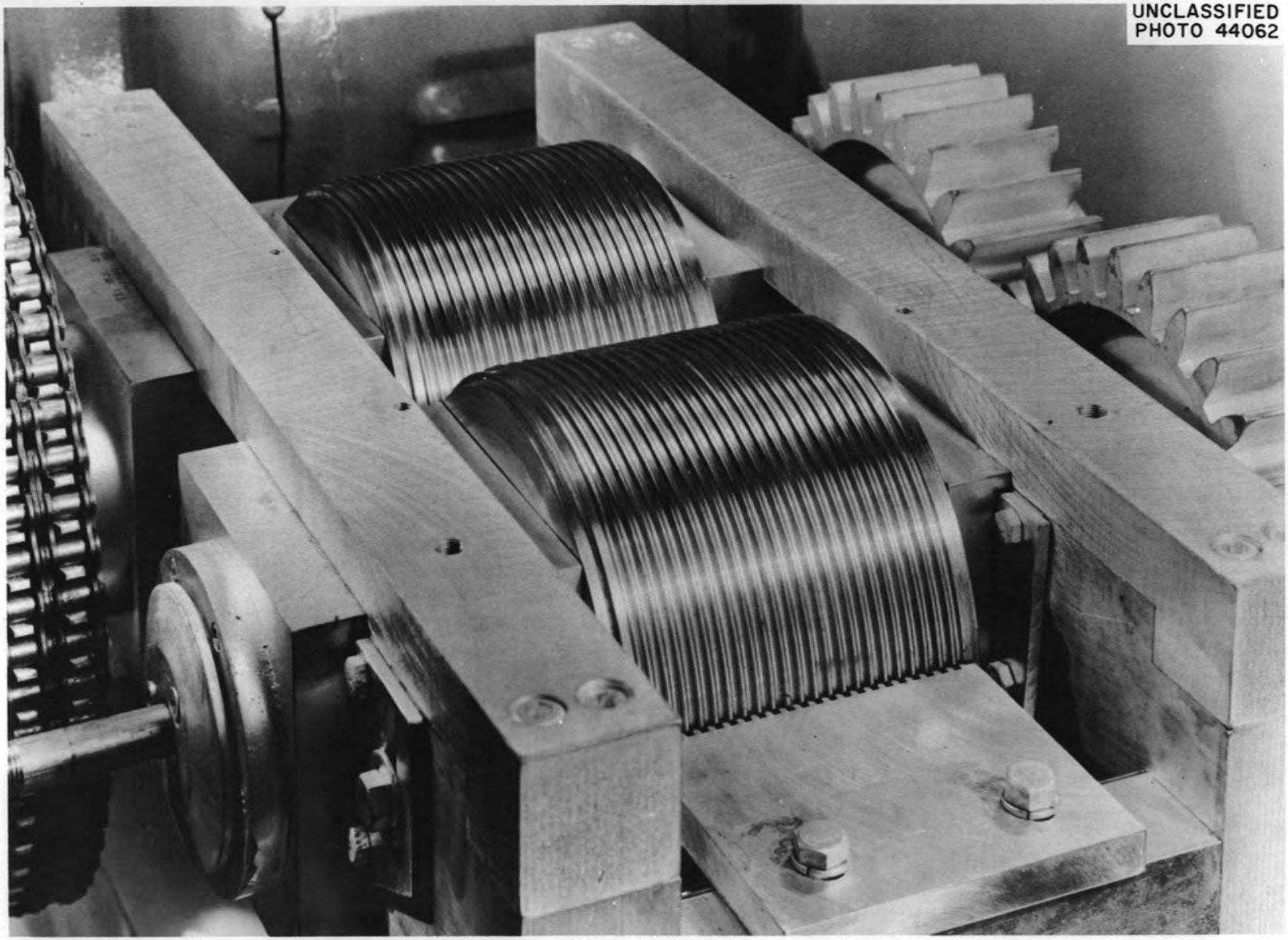

Fig. 6.1. Corrugated rollers in Chilsonator compactor.

UNCLASSIFIED
ORNL-LR-DWG 47782

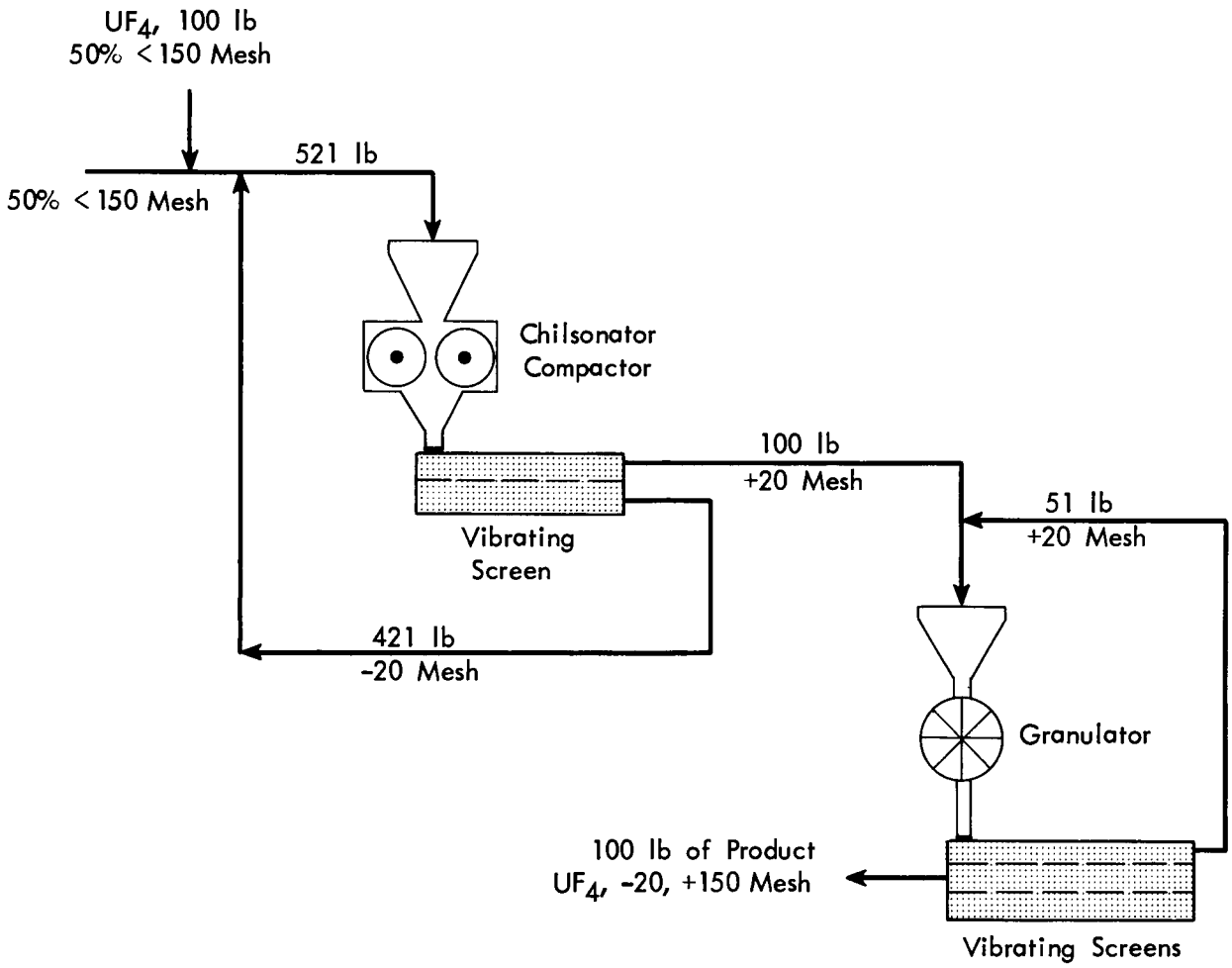

Fig. 6.2. Fluorox fluidized bed feed preparation flowsheet. Basis: Preparation of 100 lb of UF_4 in the size range -20 mesh +150 mesh; all streams calculated from experimental data.

7.2 Purification of a Side Stream

Because of the buildup of metal fluoride impurities in the Fluorox process from reactor corrosion and addition with the feed, it will be necessary to take a small side stream from the recycled UO_2F_2 for purification. The purification of this side stream will remove the metal fluoride impurities and thus maintain these impurities in the system at a constant level.

No experimental work was done on a purification system in this program, but several such systems are available. Among them are, dissolution with purification by either solvent extraction, or precipitation with ammonia or hydrogen peroxide, and the Excer process.[15] For purposes of a plant cost estimate (Sect. 8.0) an Excer process purification scheme was used because of the availability of cost data.

8.0 PLANT COST ESTIMATE

The final step in the Fluorox Program prior to design of a pilot plant or production facility was a cost study of the process. The manufacturing cost for converting feed materials-grade UF_4 to cascade-grade UF_6 was determined to be $0.29 per pound of uranium processed for a plant with a throughput equivalent to 5000 tons of U_3O_8 per year. This plant size is the same as the facility bid on by private industry in the Civilian Application Program in 1956.

8.1 Design Criteria

The cost estimate was made for a fully integrated facility capable of converting feed materials-grade UF_4 to cascade-grade UF_6 (Fig. 8.1). The plant consists of (1) a feed preparation section (where finely divided UF_4 can be increased in size to -20 +150 mesh fluidized bed feed) which consists of a compacting machine for the initial up-grading step, a vibrating screen for recycle of fines, a granulator for producing an acceptable feed from the up-graded material, and the necessary storage and solids handling facilities; (2) an oxidation reaction section where the primary Fluorox reaction ($2UF_4 + O_2 \rightarrow UO_2F_2 + UF_6$) is carried out in two 24-in.-dia fluidized beds; (3) an oxidation reactor off-gas facility which removes the UF_6 product from the off-gas by a series of two cold traps with an oxygen purge to the atmosphere through a fluidized bed of UF_4 to prevent buildup of HF; (4) a recycle section consisting of two 24-in.-dia fluidized bed reactors for converting the by-product UO_2F_2 to UF_4 by reduction with H_2 ($UO_2F_2 + H_2 = UO_2 + 2HF$) and hydrofluorination of the resulting UO_2 ($UO_2 + 4HF \rightarrow 2H_2O + UF_4$); and (5) a purification section, which is a small Excer plant to be used to process a portion of the oxidation reactor by-product for removal of accumulated metal fluoride and other nonvolatile impurities.

The design and operating conditions of the oxidation reactors are based on experimental information and represent optimum conditions. Design of the other equipment and determination of other operating conditions are based on available experimental and operational information from similar process systems.

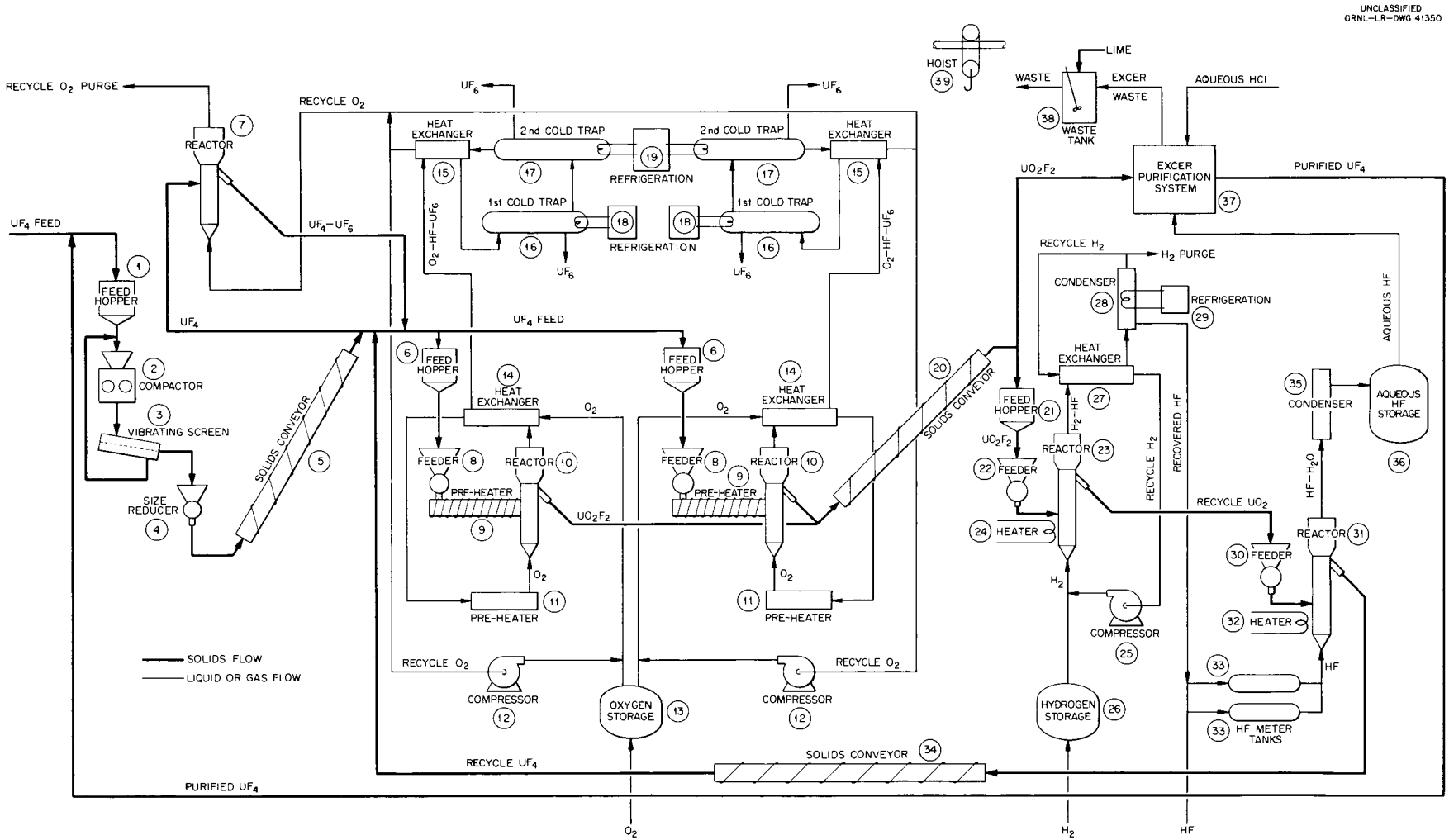

Fig. 8.1. Fluarox process flowsheet showing major process equipment.

Although some of the design criteria (Table 8.1) are based on available information, there are also some arbitrary choices which were made without benefit of experimental or operational data (also listed in Table 8.1). The resulting system is certainly operable but is not necessarily the most economical system because of these arbitrary criteria. Additional experimental work would therefore be desirable.

On the basis of the design criteria listed in Table 8.1, a chemical process flowsheet (Fig. 8.2) was developed. This flowsheet gives a complete material balance for all major process streams. Use of this information makes it possible to properly size process equipment and determine throughputs.

8.2 Cost Estimating Procedure

The plant cost estimating procedure used was presented by Aries and Newton in "Chemical Engineering Cost Estimation."[22] In this procedure, the purchased cost of major process equipment is used to determine the other components of physical plant cost by use of factors which have been empirically determined. Manufacturing costs can be estimated similarly by use of costs of fixed capital, raw materials, labor, and utilities.

This abbreviated cost estimating method is probably as accurate as is justified by the available experimental data. The various factors given by Aries and Newton to determine the different costs are usually given as a range of values. In general, the present cost estimate was prepared by using the maximum value of each factor; therefore the determined costs should represent maximum values and the overall effect is a conservative estimate.

8.3 Fixed Capital Estimate

The fixed capital is primarily based on the purchased cost of major process equipment. Major process equipment was defined as any process equipment with an installed cost of $1000 or greater. There are a total of 39 pieces of major process equipment (Fig. 8.1). The size and material of construction of this equipment (Table 8.2) were determined from the material balance or throughput and operating conditions. Purchased costs of the major process equipment were determined from published cost data, such as equipment cost graphs, by using sizing factors on comparable but different sized equipment and actual cost data on similar equipment now in use. The "Engineering News Record" cost index was used to equate all cost data to purchased cost in 1959.

The total purchased cost for all major process equipment is $611,400 (Table 8.2). A physical plant cost was determined from the factors of Aries and Newton:[22] 43% of the purchased equipment cost for installation cost, 36% for piping, 30% for instrumentation, 8% for insulation, 15% for electrical, 65% for building, 15% for land and yard improvements, 75% for utilities. This procedure gives a total physical plant cost of $2,366,100 (Table 8.3).

Table 8.1. Fluorox Plant Design and Cost Estimating Criteria

Plant capacity	5000 tons of U_3O_8 equivalent or 4240 tons of uranium per year
Design operating time	300 days per year
Process heaters	Electrical
All reactors	Fluidized bed, Inconel, 24-in.-dia, with 0.5-in.-thick walls; minimum superficial gas velocity 0.5 ft/sec
Oxygen and hydrogen	99.5% oxygen and 99% hydrogen, both at 200 psig, available at plant site at current costs
Purification	Metal fluorides kept at constant concentration in solids by Excer purification of side stream
Oxidation System	
Reactors	Two, corrosion rate of 0.25 ipy; both must be replaced once each year
UF_4 in fluidized bed	10%
Bed temperature	825°C
Off-gas	10% UF_6, 1% HF, remainder O_2
Recycle System	
Reactors	One for reduction and one for hydrofluorination; corrosion rate 25% of that in oxidation system
Operating conditions	In both reactors, similar to present comparable feed material processes
Gas utilization	Hydrogen, 99%, by off-gas recycle; anhydrous HF, 90% in hydrofluorination and remainder in Excer facility

Solids (specific gravity of loose solids 3.0, of fluidized solids 2.0)

Component	Initial UF_4 Feed	Oxidation By-product	Recycle UF_4 Product	Excer-purified UF_4
UF_4, %	96.0	10.0	95.0	97.40
UO_2F_2, %	2.50	88.0	1.9	2.25
UO_2, %	1.35		1.0	0.20
Other metal fluorides, % *	0.50	2.0	2.0	0.05
H_2O, %	0.10		0.1	0.10

*Material composed of 50% metal and 50% fluorides.

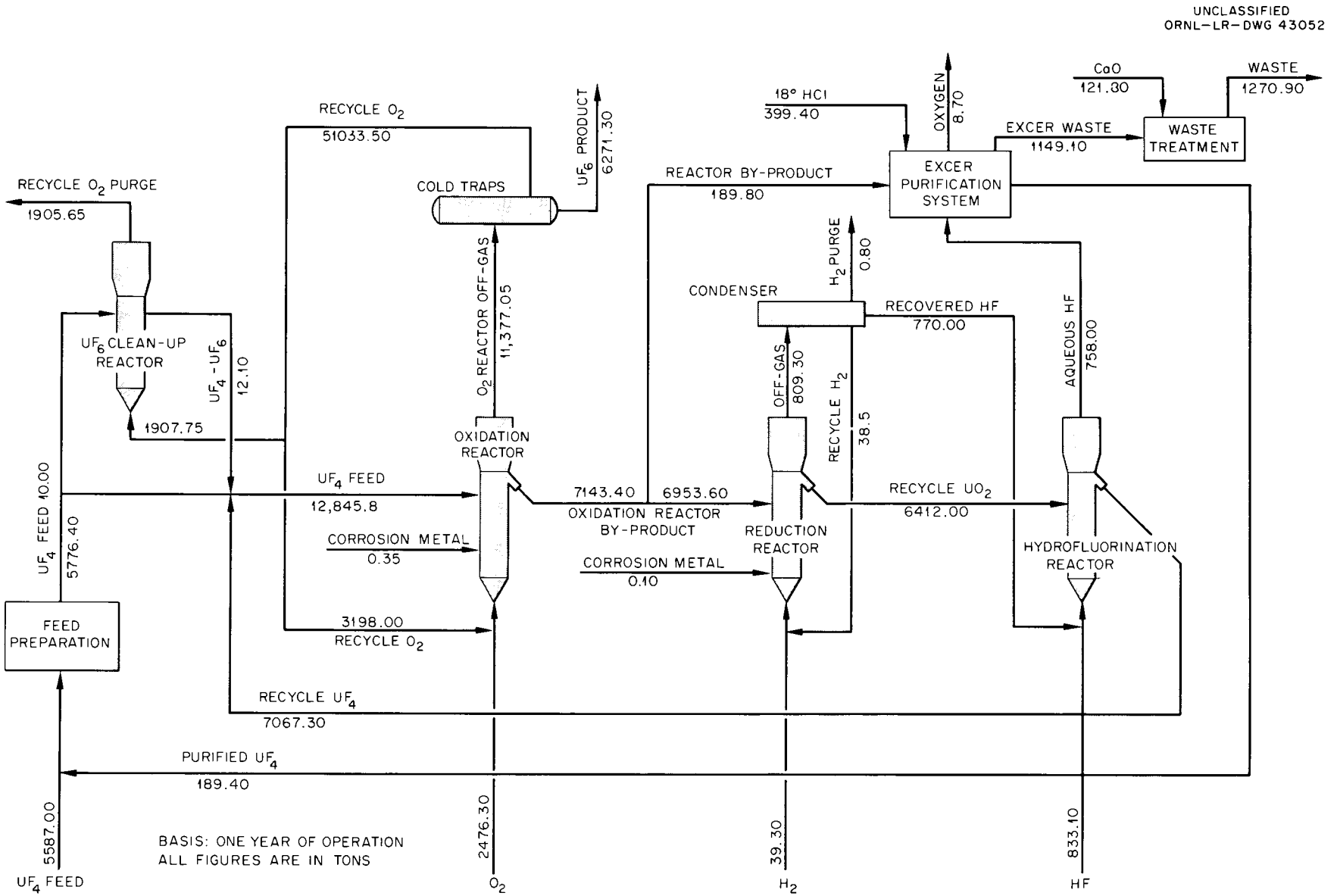

Fig. 8.2. Fluorox Process Chemical Flowsheet.

Table 8.2. Specifications and Purchase Cost of Major Process Equipment

Equipment No. (Fig. 2)	Description	Size	No. of Units	Material of Construction	Material Handled	Temperature, °C	Pressure, psig	Material flow rate, lb/hr	Purchased Cost, 1959	Cost Reference
1	Feed hopper	66.2 cu ft	1	SS	UF_4 feed	atm	atm	1600	$ 2800	23, p. 100
2	Solids compactor	3200 lb/hr	1	SS	UF_4 feed	atm	atm	3200	13400	24
3	Vibrating screen	100 mesh, 7.5 sq ft	1	SS	UF_4 feed	atm	atm	3200	1400	22, p.58; 25
4	Solids size reduction	50 hp	1	SS	UF_4 feed	atm	atm	1600	3900	22, p. 60; 25, p. 141
5	Solids conveyor, screw type	4 in. dia, 20 ft long	1	SS	UF_4 feed	atm	atm	1600	1500	22, p. 28
6	Feed hopper	76.2 cu ft	2	SS	UF_4 feed	atm	atm	1800	7000	22, P. 66
7	O_2 purge reactor	18 in. dia with 30-in. expanded section and 17 sq ft filter	1	Monel	UF_4 and recycle O_2	atm	atm	UF_4-3 O_2-530	6600	26, p. 269; 29
8	Solids feeder	2-in. screw	2	SS	UF_4 feed	atm	atm	1800	1900	27
9	Solids preheater	6-in. screw, 200,000 Btu/hr	2	Inconel	UF_4 feed	600	atm	1800	27500	22, p. 28;
10	Oxidation reactor	24 in. dia with 36-in. expanded section and 48 sq ft filter	2	Inconel	O_2, UO_2F_2, UF_6, and UF_4 feed	825	5	UF_4-1800	17600	26, p. 269; 29
11	Oxygen preheater	176,000 Btu/hr	2	Inconel	Oxygen	1100	100	790	34100	22, p. 49; 28
12	Oxygem compressor	5000 scfh	2	SS	Oxygen	atm	0-150	450	8400	22, p. 25
13	Oxygen storage tank	5500 cu ft	1	Steel	Oxygen	atm	150	690	12900	22, p. 67
14	Heat exchanger	105 sq ft	2	Inconel	O_2-UF_6	25-825	5	1600	7500	22, p. 49
15	Heat exchanger	64 sq ft	2	Copper	O_2-UF_6	-55 to 200	5	1600	5700	22, p. 49
16	Primary cold traps	10 tons UF_6	3	Monel	O_2-HF-UF_6	-17	5	UF_6-826	104600	31
17	Secondary cold traps	3 tons UF_6	3	Monel	O_2-HF-UF_6	-60	5	UF_6-44	69700	31
18	Refrigeration	7.8 tons	2			-17			22700	23, p. 105
19	Refrigeration	4 tons	1			-60			34100	23, p. 105
20	Solids conveyor screw type	4 in. dia, 20 ft long	1	SS	UO_2F_2	200	atm	2000	1500	22, p. 28
21	Feed hopper	40 cu ft	1	SS	UO_2F_2	200	5	2000	2300	22, p. 66
22	Solids feeder	2-in. screw	1	SS	UO_2F_2	200	5	1900	1000	27
23	Reduction reactor	Same as No. 10	1	Inconel	UO_2F_2-UO_2	625	5	1900	8800	26, p. 269; 29
24	Heater	223,600 Btu/hr	1			650			14300	22, p. 49; 28
25	H_2 compressor	3500 scfh	1	Steel	H_2	atm	0-150	108	3900	22, p. 25
26	H_2 storage tank	1370 cu ft	1	Steel	H_2	atm	150	110	5200	22, p. 67
27	Heat exchanger	142 sq ft	1	Copper	H_2-HF	-55 to 400	5	240	3100	22, p. 49
28	HF condenser	67 sq ft	1	Copper	HF	-60	5	220	1500	22, p. 49
29	Refrigeration	5.5 tons	1			-60			42600	23, p. 105
30	Solids feeder	2-in. screw	1	SS	UO_2-UF_4	200	5	1700	1000	27
31	Hydrofluorination reactor	Same as No. 10	1	Monel	UO_2-UF_4	575	5	1700	8800	24; 26, p. 269
32	Heater	20,000 Btu/hr	1			600			3400	22, p. 40; 28
33	HF meter tanks	220 gal	2	Steel	HF	100	100	230	1000	22, p. 66
34	Solids conveyor screw type	4 in. dia, 50 ft long	1	SS	UF_4	atm	atm	2000	1500	22, p. 28
35	Aqueous HF condenser	700 gal/hr cooling H_2O	1	Copper	Aq. HF	100	5	210	1000	22, p. 26
36	Aqueous HF hold-up tank	200 gal	1	Rubber lined steel	Aq. HF	atm	atm	210	1300	22, p. 66
37	Excer process	0.47 tons U/day	1		UO_2F_2			53	110500	15
38	Waste tank	340 gal, agitated	1	Rubber lined steel	Excer waste	atm	atm	320	4400	22, p. 64
39	Hoist	15 ton capacity on monorail	1						11000	32

Total Purchased Equipment Cost $611,400

Table 8.3. Total Fixed Capital

Purchased equipment cost	$ 611,400
Installation (43% of purchased equipment cost)	262,900
Piping (36% of purchased equipment cost)	220,100
Instrumentation (30% of purchased equipment cost)	183,400
Insulation (8% of purchased equipment cost)	48,900
Electrical (15% of purchased equipment cost)	91,700
Building (65% of purchased equipment cost)	397,400
Land and yard improvement (15% of purchased equipment cost)	91,700
Utilities (75% of purchased equipment cost)	458,600
Physical Plant Cost	$2,366,100
Engineering and construction (25% of physical plant cost)	591,500
Direct Plant Cost	$2,957,600
Contractor's fee (7% of direct plant cost)	207,000
Contingency (25% of direct plant cost)	739,400
Total Fixed Capital	$3,904,000

Table 8.4. Raw Materials Cost per Year

Material	Amount, tons/yr	Unit Cost	Reference for Unit Cost	Total Cost per Year
Oxygen	2476	$23.3/ton	33	$ 61,200
Anhydrous HF	833	0.21/lb	34, p. 75	350,000
Hydrogen	39	4.7/1000 cu ft	23	65,000
18° HCl	399	1.40/100 lb	34, p. 75	11,200
Lime	122	10/ton	34, p. 82	1,200
Other materials				
Excer resin				2,800
Excer cell membranes				400
2 oxidation reactors				25,200
Total raw materials cost per year				$517,000

Addition of the engineering and construction cost (25% of physical plant cost) to physical plant costs gives the direct plant cost of $2,957,600. Addition of the contractor's fee (7% of direct plant cost) and contingency (25% of direct plant cost) to direct plant cost gives the total fixed capital of $3,904,000.

8.4 Manufacturing Cost Estimates

The direct manufacturing cost was determined by estimating the cost of raw materials, labor, and utilities and applying factors for determining the cost of supervision (25% of labor), maintenance (6% of fixed capital) and plant supplies (15% of maintenance). Total raw materials cost for one year of operation is $517,000 (Table 8.4). The operating labor force necessary for continuous operation is 64 men (Table 8.5), and the labor cost per year at a rate of $2.50 per hour is $332,800. Utilities will cost $37,400 per year (Table 8.6). Summation of the costs of raw materials, labor, supervision, maintenance, plant supplies, and utilities yields a total direct manufacturing cost of $1,239,700 per year.

Indirect manufacturing cost is based entirely on the cost of labor. This cost includes payroll overhead (15% of labor), laboratory (15% of labor), and plant overhead (75% of labor), which totals $349,400 per year.

Fixed manufacturing cost is composed of the depreciation of the total fixed capital, which is 20% of fixed capital per year or $780,800, property tax of $39,000 per year (1% of fixed capital), and insurance of $39,000 per year (1% of fixed capital). Thus, the total fixed manufacturing cost is $858,800 per year. The depreciation on fixed capital of 20% per year represents a 5-year amortization period, the shortest period generally used in the U.S. chemical industry.

The total manufacturing cost is the summation of direct manufacturing cost, indirect manufacturing cost, and fixed manufacturing cost. This cost is $0.29 per pound of uranium processed for UF_4 to UF_6 (Table 8.7). Costs for company administration, sales, research, finance, etc., were not estimated since the type of market is unknown and there is no general agreement among various companies for handling these functions.

9.0 EVALUATION AND APPLICATION OF THE FLUOROX PROCESS

The experimental phases of the Fluorox Program, both laboratory and engineering, have proved the feasibility of the primary oxidation reaction, $2UF_4 + O_2 \rightarrow UF_6 + UO_2F_2$, on a large scale. Product yields of up to 90% of theoretical can be anticipated, and if reactor design and operation are optimum, the oxidation reaction can be controlled staisfactorily. Although the entire flowsheet was not demonstrated, the recycle steps are straightforward processes which either are well known or appeared feasible in laboratory studies.

One of the main reasons for investigating the Fluorox process was the high cost and the difficult handling problems associated with the use of fluorine. Fluorine costs become particularly significant when fluorine is used in small amounts because of its high cost in small amounts.

Table 8.5. Operating Labor Force

Operation	No. of men per shift	No. of men for 4 shifts
Feed preparation	2	8
Recycle O_2 purge reactor	1	4
Cold traps	2	8
Oxidation reactors	3	12
Reduction reactor	1	4
Hydrofluorination reactor	1	4
Excer system	2	8
Utilities	2	8
Relief and misc.	2	8
Totals	16	64

At 2080 hr per man per year and $2.50/hr or $5200 per man per year, total yearly labor cost is $332,800

Table 8.6. Cost of Utilities per Year

Utility	Amount per year	Unit Cost	Total Cost per Year
Steam, 100 psi	6,452,000 lb	$0.70/1000 lb	$ 4,510
Electric power	3,318,000 kwh	0.007/kwh	23,200
Cooling H_2O	5,040,000 gal	0.10/1000 gal	500
Process H_2O	11,300,000 gal	0.05/1000 gal	570
Demineralized H_2O	113,000 gal	0.15/1000 gal	20
Total process utilities			$28,800
Building and service needs (30% of process utilities)			8,600
Total cost of utilities			$37,400

Table 8.7. Manufacturing Cost

Basis: 1 lb of uranium processed from UF_4 to UF_6

Raw materials	$0.061	
Labor	0.039	
Supervision (25% of labor)	0.010	
Maintenance (6% of fixed capital)	0.027	
Plant supplies (15% of maintenance)	0.004	
Utilities	0.004	
Direct manufacturing cost		$0.145
Payroll overhead (15% of labor)	$0.006	
Laboratory (15% of labor)	0.006	
Plant overhead (75% of labor)	0.029	
Indirect manufacturing cost		0.041
Depreciation (20% per year of fixed capital)	$0.092	
Property tax (1% of fixed capital)	0.005	
Insurance (1% of fixed capital)	0.005	
Fixed manufacturing cost		0.102
Manufacturing cost		$0.288

Thus, for a plant with an equivalent throughput of 5000 tons of U_3O_8 per year, 677 tons per year of fluorine would be needed to convert the UF_4 to UF_6 (assuming 100% utilization). Using the cost estimate of Huber et al.,[35] extrapolating capital costs by the "0.6 rule,"[22] assuming 100% plant throughput 360 days per year, and using a 20-year amortization, the manufacturing cost of fluorine for this size plant would be $0.56 per pound of fluorine. Thus the chemical costs for converting UF_4 to UF_6 with fluorine would be $0.09 per pound of uranium processed vs. $0.06 per pound of uranium processed for the chemical costs for the comparable Fluorox process. This chemical cost advantage would be greater for small plants and less for larger plants. The advantage of lower chemical costs is balanced by a more complicated process containing a 50% recycle stream in the Fluorox Process.

Where there are existing facilities for UF_6 production by use of fluorine, there does not appear to be justification for considering an alternative process such as Fluorox. However, if a new facility is planned, and particularly if the facility is to be of moderate size (with a throughput less than an equivalent 5000 tons of U_3O_8 per year), serious consideration should be given the Fluorox process, and an independent cost estimate should be undertaken.

10.0 REFERENCES

1. S. Fried and N. R. Davidson, "The Reaction of UF_4 with Dry O_2, A New Synthesis of UF_6," AECD-2981 (May 1945).

2. S. S. Kirslis, T. S. McMillan, and H. A. Bernhardt, "The Reaction of Uranium Tetrafluoride with Dry Oxygen," K-567 (March 15, 1950).

3. R. M. Hainer for USAEC, U. S. Patent No. 2,535,572 (Dec. 26, 1950).

4. C. J. Mandelberg and D. Davies, "A Study of the Reaction Between UF_4 and O_2," AERE-C/R-863 (Feb. 13, 1952).

5. L. M. Ferris and E. F. Carter, "Laboratory Development of the Fluorox Process: II. A Thermogravimetric Study of the Chemical Kinetics of the Reaction of UF_4 with Dry Oxygen," ORNL-2216 (April 26, 1957).

6. J. E. Moore, "Fluorox Moving-bed Process for Producing UO_3, UF_4, and UF_6: Bibliography," ORNL-2117, Confidential (Aug. 6, 1956).

7. H. W. Franz and R. H. Toye, "Oxidation of Uranium Tetrafluoride in a Moving-bed Reactor," ORNL-2409 (Dec. 27, 1957).

8. J. B. Adams, L. M. Ferris, and C. D. Scott, "Fluorox Process: Progress Report to April 30, 1957," CF 58-11-109, Confidential.

9. J. B. Adams, L. M. Ferris, and C. D. Scott, "Progress Report on the Fluorox Process for April 30, 1957 - January 14, 1958," CF 58-9-66.

10. J. C. Bresee et al., "The Development of a Fluidized Bed Reactor for the Fluorox Process: Unit Operations Monthly Status Reports for January through October, 1958," CF 58-11-30.

11. L. M. Ferris and E. F. Gabbard, "Kinetics of the Thermal Decomposition of Uranyl Fluoride: I. Preliminary Results," ORNL-2401 (Feb. 17, 1958).

12. L. M. Ferris and R. P. Gardner, "Recycle of UO_2F_2 in the Fluorox Process: Reaction of UO_2F_2 with Hydrogen," ORNL-2690 (June 25, 1959).

13. L. M. Ferris, "A Study of the Reaction $2UF_4 + O_2 \rightarrow UF_6 + UO_2F_2$: I. Side Reactions and Thermodynamics," J. Am. Chem. Soc., 79: 5419 (1957).

14. P. J. Birbara and R. Gilman, "UF_4 Oxidation Kinetics," KT-268, MIT Practice School, ORGDP, Confidential (1956).

15. I. R. Higgins et al., "Development of the Excer Process: IV. Chloride System," ORNL-2490 (Nov. 19, 1958).

16. J. J. Katz and E. Rabinowitch, "The Chemistry of Uranium," National Nuclear Energy Series, Div. VIII, Vol. 5, McGraw-Hill, New York, 1951.

17. Stephen F. D'Urso et al., "The High Temperature Oxygen Oxidation of UF_4 to UF_6 in a Fluidized Bed Reactor," KT-238, MIT Practice School, ORGDP, Confidential (1956).

18. J. O. Cowles and G. Jansen, "High Temperature Oxidation of UF_4 to UF_6 in a Fluidized Bed," KT-264, MIT Practice School, ORGDP, Confidential (1956).

19. J. C. Bresee, C. D. Scott, and R. W. Horton, "The Development of a Fluidized Bed Reactor for the Fluorox Process: Unit Operations Monthly Status Reports for the Period November 1958 through May 1959," CF 59-5-93.

20. C. A. Powell, "Current Manufacturing Processes Used in the United States for Mass Production of UF_6 from Purified UO_3," P/1840, Second Internatl. Conf. on Peaceful Uses of Atomic Energy, Geneva, 1958, Vol. 4, p. 165-171, U. N., New York.

21. S. H. Smiley and D. C. Brater, "The Development of a High-capacity Continuous Process for the Preparation of Uranium Hexafluoride from Uranium Oxides and Ore Concentrates," P/525, Second Internatl. Conf. on Peaceful Uses of Atomic Energy, Geneva, 1958, Vol. 4, p. 153-171, U. N., New York.

22. R. S. Aries and R. D. Newton, "Chemical Engineering Cost Estimation," McGraw-Hill, New York, 1955.

23. C. H. Chilton, "Cost Data Correlated," Chem. Eng., 56(6): 97 (1949).

24. Albert Kircher, W. J. Fitzpatric Co., letter to J. B. Adams, ORNL, July 25, 1957.

25. J. H. Perry, "Chemical Engineers Handbook," McGraw-Hill, New York, 1950.

26. J. Happel, "Chemical Process Economics," Wiley, New York, 1958.

27. Vibra Screw Co. bulletin, "The Better Method of Feeding Dry Materials," and price list.

28. C. W. Hancher, ORNL, personal communication, Aug. 21, 1959.

29. W. Boyd, ORGDP, personal communication, Aug. 17, 1959.

30. Hugh Fairchough, "What Price Hydrogen?" Petroleum Refiner, 35(9): 333 (1956).

31. T. Shapiro, ORGDP, personal communication, Aug. 1, 1959.

32. E and M Division of ORNL, personal communication, Aug. 17, 1959.

33. B. H. Van Dyke, W. J. Dougherty, "Cost of Low Temperature Processing," Chem. Eng. Prog., 51(4): 157 (1955).

34. "Quarterly Report on Current Prices," Chem. Eng. News, 37(39): 97 (1959).

35. A. P. Huber et al., "Multi-Ton Production of Fluorine for Manufacture of Uranium Hexafluoride," P/524, Second Internatl. Conf. on Peaceful Uses of Atomic Energy, Geneva, 1958, Vol. 4, p. 172-180, U. N., New York.

11.0 APPENDIX

11.1 Determination of Molecular Constituents in Fluorox Solids

The determination of the molecular constituents in the uranium-bearing solids in the Fluorox experimental program was based on the following chemical analyses: % total uranium, % uranium in the +IV valence state, % water-soluble uranium, % of solids insoluble in ammonium oxalate (AOI), % uranium in the AOI, and % H_2O. Analyses for % fluoride content were used to check the calculation, and analyses for various metal impurities were used when the amount of impurity was significant. The assumptions which were made for these calculations were:

a. The total uranium, uranium in the AOI, and the AOI values were always correct.

b. All metal impurities were present as the metal fluoride of the highest oxidation state usually attained and were contained in the AOI. These impurities were determined from analyses for other metals, principally nickel, iron, and chromium.

c. The uranium in the AOI represented the UO_2 and U_3O_8, and the % uranium water soluble represented UO_2F_2.

d. The total amount of uranium oxides was determined from subtraction of the metal fluorides from the AOI. The individual amounts of UO_2 + U_3O_8 were determined by conventional material balances.

e. The amount of U(IV) in the AOI was determined from the amounts of UO_2 and U_3O_8 present.

f. The smaller of the two values % U(IV) and % water-soluble uranium was considered the more significant.

When the U(IV) analysis was the more significant value, it was considered to represent the UF_4 and the U(IV) in the AOI, and the U(IV) was determined by subtracting U(IV) from the total uranium. When the water-soluble uranium analysis was the more significant value, it was considered to represent the UO_2F_2 only, and the U(IV) was determined by subtracting the water-soluble from the total uranium.

g. After all molecular determinations were made, the amounts were adjusted to obtain a 100% material balance.

Example: Typical UF_4 feed:

Total U	75.4 wt %	Fluoride	23.2 wt %
U(IV)	75.0 wt %	H_2O	0.2 wt %
Water-soluble U	0.9 wt %	Ni	0.01 wt %
U in AOI	0.09 wt %	Fe	0.04 wt %
AOI	0.2 wt %	Cr	< 0.001 wt %

(1) NiF_2 0.02%
FeF_3 0.08%

Total MF = 0.1%

(2) AOI - MF = 0.2 - 0.1 = 0.1 = uranium oxides

From material balance, all oxides must be UO_2.

(3) 0.1 x 0.88 = 0.09% U(IV) in AOI

The soluble uranium value is smaller than the U(IV) value = 0.9

(4) Total U - water-soluble U = 75.4 - 0.9 = 74.5% U(IV)

(5) Water-soluble U ÷ 0.7727 = UO_2F_2

% UO_2F_2 = 0.9/0.7727 = 1.2%

(6) U(IV) - U(IV) in AOI ÷ 0.758 = UF_4

% UF_4 = (74.5 - 0.1)/0.758 = 98.1%

(7)

Constituent	wt %	Adjusted wt %
UF_4	98.1	98.4
UO_2	0.1	0.1
UO_2F_2	1.2	1.2
MF	0.1	0.1
H_2O	0.2	0.2
	99.7	100.0

11.2 Determination of UF_6 Material Balance

The UF_6 material balance was made by accounting for all the UF_6 that was apparently formed and referring this amount to the theoretical amount of UF_6 that should have been formed from the UF_4 which disappeared during the run. UF_6 that was apparently formed was accounted for by:

(1) The amount collected in cold traps and chemical traps.

(2) The amount used up in the corrosion reaction (based on the increase of non-uranium metal fluorides in the system during the run):
$2Ni + UF_6 + O_2 \rightarrow 2NiF_2 + UO_2F_2$
$4Cr + 3UF_6 + 3O_2 \rightarrow 4CrF_3 + 3UO_2F_2$
$4Fe + 3UF_6 + 3O_2 \rightarrow 4FeF_3 + 3UO_2F_2$

(3) The amount used up in the water reaction (based on the water content of the feed):
$UF_6 + 2H_2O \rightarrow UO_2F_2 + 4HF$

(4) The amount used up in the reaction with uranium oxides (based on the uranium oxide content of the feed):
$2UO_2 + UF_6 + O_2 \rightarrow 3UO_2F_2$
$2U_3O_8 + 3UF_6 + O_2 \rightarrow 9UO_2F_2$

Example:

In run FBR-21, 10,809 g of UF_4 was reacted to theoretically form 6060 g of UF_6.

(1) The amount of UF_6 collected in cold traps and chemical traps was 5610 g.

(2) A total of 46 g of metal fluorides (non-uranium) was generated during the run. This would have resulted from reaction with 87 g of UF_6.

(3) 26 g of H_2O was introduced with the feed. 254 g of UF_6 was used up in the water reaction.

(4) 13 g of UO_2 and 6 g of U_3O_8 were introduced with the feed. These oxides would react with 8 g and 4 g of UF_6, respectively.

The total uranium material balance was:

	Amount, g		% of Theoretical	
Theoretical amount of UF_6 formed		6060		100.0
Collected in cold traps and chemical traps	5610		92.6	
Consumed in corrosion reaction	87		1.4	
Consumed in H_2O reaction	254		4.2	
Consumed in uranium oxide reaction	12		0.2	
Total UF_6 accounted for		5963		98.4

11.3 Evaluation of Rate Constants

It was necessary to use two different methods for evaluation of the rate constants, one for batch fluidized bed runs and another for continuous fluidized bed runs.

Rate Constants for Batch Fluidized Bed Runs. Since laboratory results indicated that the oxidation reaction ($2UF_4 + O_2 \rightarrow UF_6 + UO_2F_2$) was a pseudo first order reaction, the relation $-dw/t = kw$ applies, where w is the amount of UF_4 in the reactor at any time, t, and k is the reaction rate constant. To obtain this simple form it was necessary to assume constant surface area per unit weight of UF_4 and to neglect the effects of vaporization of UF_4 and UO_2F_2 and of oxygen partial pressure.

The total bed weight varies with time and in general is unknown; therefore a function involving only UF_4 concentration was developed. Given:

$$2UF_4 + O_2 \rightarrow UO_2F_2 + UF_6$$
$$2(314)(32) \quad (308) \quad (352)$$

W_{t_o} = total weight of bed at t_o

W_t = total weight of bed at t, $t > t_o$

w_o = weight of UF_4 in bed at t_o

y = % of $UF_4/100$ = (1.32)% $U^{+4}/100$

$$W_t = W_{t_o} - 1/2\ (352/314)(w_o - w) + 1/2\ (32/314)(w_o - w)$$

but $y = w/W_t = w/W_{t_o} - 0.51\ (w_o - w)$

and $w = (y/1-0.51y)(W_{t_o} - 0.51w_o)$

Integrating the original equation between limits gives:

$$\int_{w_1}^{w_2} dw/w = k \int_{t_1}^{t_2} dt$$

$$\ln w_1/w_2 = k(t_2 - t_1)$$

Since $(w_{t_o} - 0.51w_o)$ is a constant, it would drop out in the integration between limits and the function $y/(1-0.51y)$ may be used to represent w. A plot of $\ln y/(1-0.51y)$ vs t during a run allows an estimate of k by measurement of the slope of the line (Fig. 11.1).

Rate Constants for Continuous Fluidized Bed Runs. The apparent reaction rate constant for continuous fluid bed runs was determined from the relation

k = UF_4 conversion rate/UF_4 inventory in the bed

when the fluidized bed was operating at apparent steady state. The UF_4 inventory in the bed was determined by the UF_4 concentration in the bed as determined from analysis of the solids from the bed overflow and knowledge of the total bed inventory. The UF_4 conversion rate was determined by a UF_4 material balance around the fluidized bed at steady state (Fig. 11.2).

UNCLASSIFIED
ORNL-LR-DWG 18750 R1

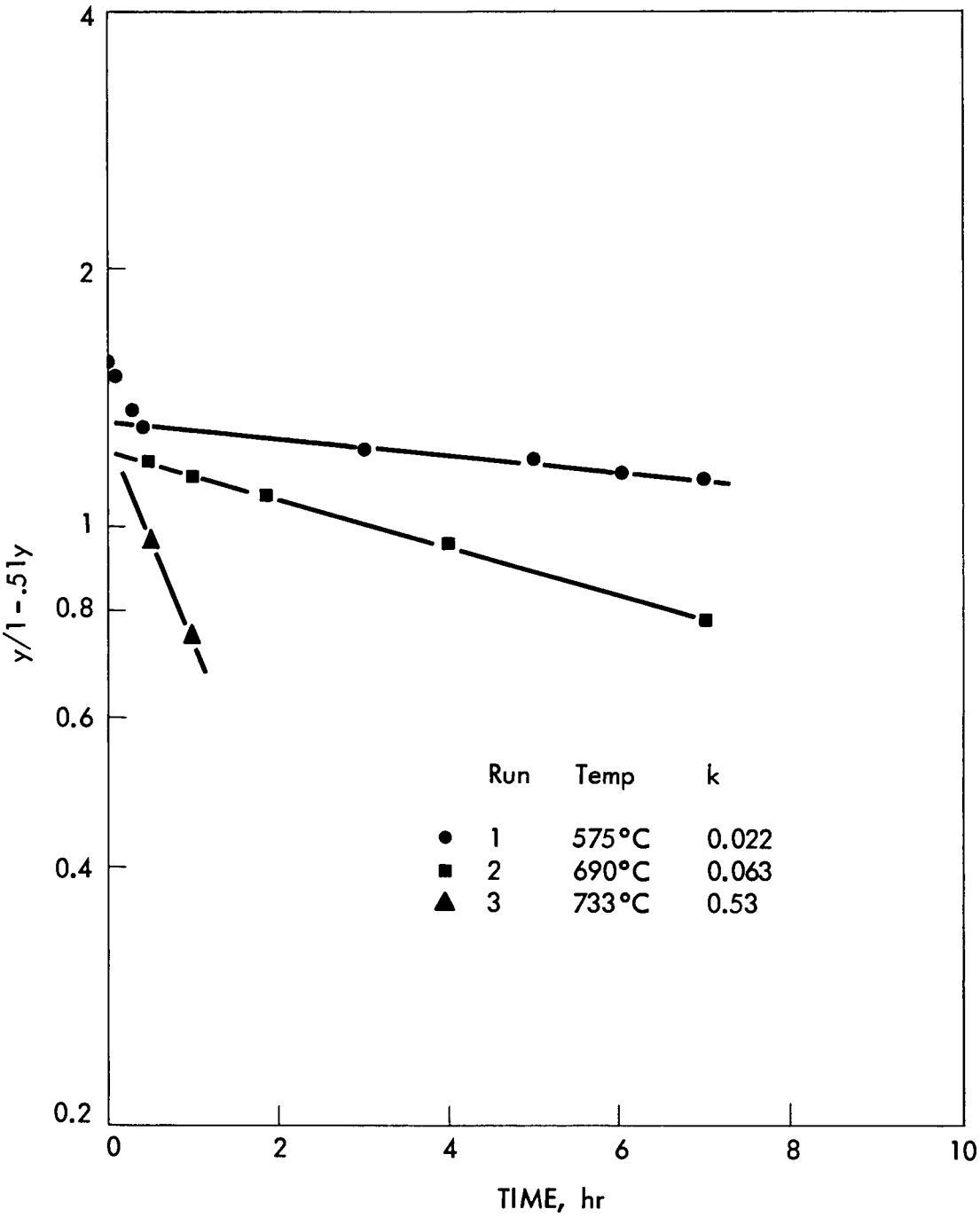

Fig. 11.1. Graph for determination of reaction rate constant from batch fluidized bed runs.

UNCLASSIFIED
ORNL-LR-DWG. 51643

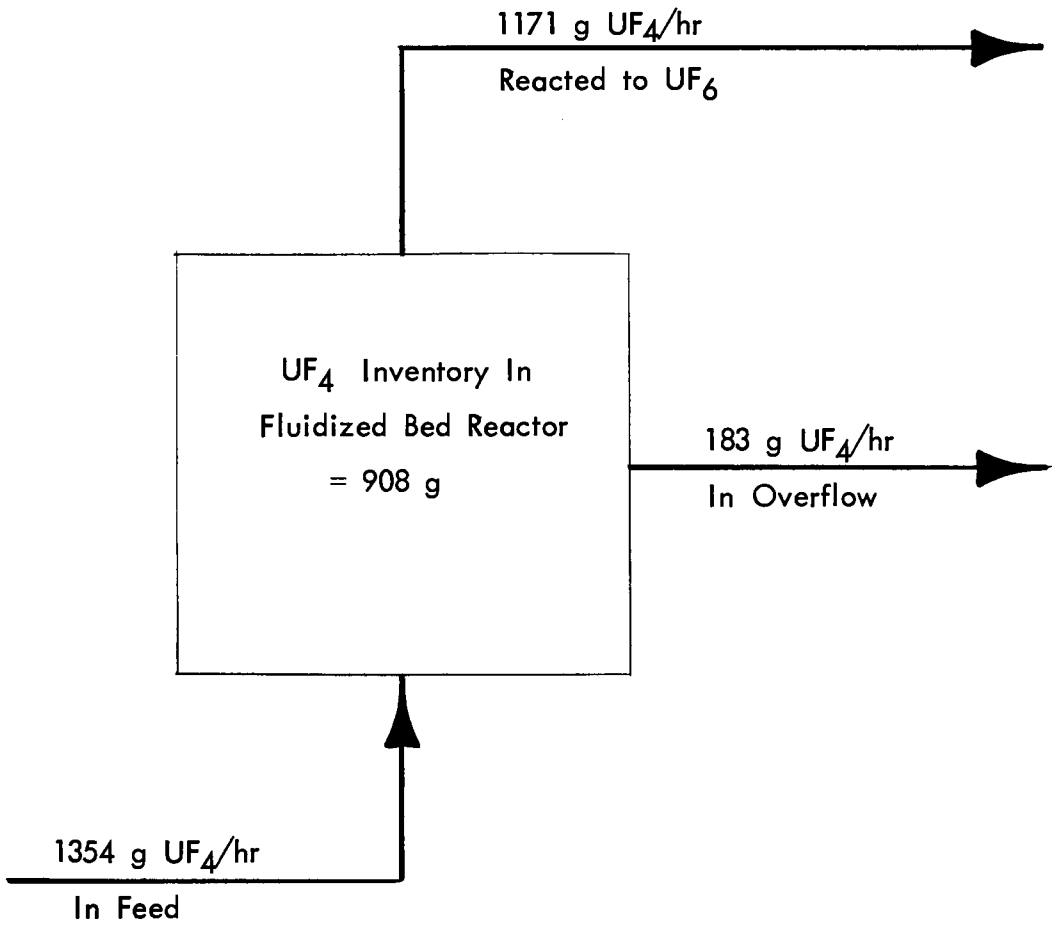

Fig. 11.2. UF_4 material balance across the fluidized bed reactor and apparent reaction rate constant for run FBR-21. All flow rates are averages based on steady-state operation. Reaction rate constant k = 1171 g/hr/908 g 1.29 hr^{-1}.

ORNL-2797
UC-47 Technology-Feed Materials
TID-4500 (15th ed.)

INTERNAL DISTRIBUTION

1. C. E. Center
2. Biology Library
3. Health Physics Library
4-5. Central Research Library
6. Reactor Experimental Engineering Library
7-26. Laboratory Records Department
27. Laboratory Records, ORNL R.C.
28. A. M. Weinberg
29. L. B. Emlet (K-25)
30. J. P. Murray (Y-12)
31. J. A. Swartout
32. E. H. Taylor
33. E. D. Shipley
34-35. F. L. Culler
36. M. L. Nelson
37. W. H. Jordan
38. C. P. Keim
39. J. H. Frye, Jr.
40. S. C. Lind
41. A. H. Snell
42. A. Hollaender
43. K. Z. Morgan
44. M. T. Kelley
45. T. A. Lincoln
46. R. S. Livingston
47. A. S. Householder
48. C. S. Harrill
49. C. E. Winters
50. H. E. Seagren
51. D. Phillips
52. F. R. Bruce
53. D. E. Ferguson
54. W. K. Eister
55. M. E. Whatley
56. H. E. Goeller
57. C. W. Hancher
58. R. A. Charpie
59. J. A. Lane
60. M. J. Skinner
61. R. E. Blanco
62. G. E. Boyd
63. W. E. Unger
64. R. S. Cockreham
65. A. T. Gresky
66. E. D. Arnold
67. C. E. Guthrie
68. J. W. Ullmann
69. K. B. Brown
70. J. C. Bresee
71. P. M. Reyling
72. R. G. Wymer
73. J. W. Youngblood
74. J. B. Adams
75. G. K. Ellis
76. L. M. Ferris
77-88. C. D. Scott
89. D. L. Katz (consultant)
90. I. Perlman (consultant)
91. C. E. Larson (consultant)
92. H. Worthington (consultant)
93. J. H. Rushton (consultant)
94. ORNL - Y-12 Technical Library, Document Reference Section

EXTERNAL DISTRIBUTION

95. National Lead Company of Ohio (J. O. Davis)
96. Mallinckrodt Chemical Works (W. Philoon)
97-99. Union Carbide Nuclear Company (1 copy each to M. J. Fortenbery, M. J. Googin, and F. S. Patton, Jr.)
100-102. Union Carbide Nuclear Company (ORGDP) (1 copy each to D. M. Lang, J. H. Pashley, and S. H. Smiley)
103-104. Union Carbide Nuclear Company (Paducah) (1 copy each to R. W. Levin and C. Powell)
105. Argonne National Laboratory (S. Lawroski)
106-594. Given distribution as shown in TID-4500 (15th ed.) under Technology-Feed Materials category (75 copies - OTS)
595. Division of Research and Development, AEC, ORO