CENTRAL RESEARCH LIBRARY
DOCUMENT COLLECTION

MARTIN MARIETTA ENERGY SYSTEMS LIBRARIES
3 4456 0351168 9

ORNL-2793
UC-37—Instruments
TID-4500 (15th ed.)

# CALIBRATION AND TESTING OF 2- AND 3½-IN. MAGNETIC FLOWMETERS FOR HIGH-TEMPERATURE NaK SERVICE

R. G. Affel
G. H. Burger
C. L. Pearce

CENTRAL RESEARCH LIBRARY
DOCUMENT COLLECTION
LIBRARY LOAN COPY
DO NOT TRANSFER TO ANOTHER PERSON
If you wish someone else to see this document, send in name with document and the library will arrange a loan.

OAK RIDGE NATIONAL LABORATORY
operated by
UNION CARBIDE CORPORATION
for the
U.S. ATOMIC ENERGY COMMISSION

Printed in USA. Price $2.25. Available from the

Office of Technical Services
Department of Commerce
Washington 25, D.C.

LEGAL NOTICE

This report was prepared as an account of Government sponsored work. Neither the United States, nor the Commission, nor any person acting on behalf of the Commission:

A. Makes any warranty or representation, expressed or implied, with respect to the accuracy, completeness, or usefulness of the information contained in this report, or that the use of any information, apparatus, method, or process disclosed in this report may not infringe privately owned rights; or

B. Assumes any liabilities with respect to the use of, or for damages resulting from the use of any information, apparatus, method, or process disclosed in this report.

As used in the above, "person acting on behalf of the Commission" includes any employee or contractor of the Commission, or employee of such contractor, to the extent that such employee or contractor of the Commission, or employee of such contractor prepares, disseminates, or provides access to, any information pursuant to his employment or contract with the Commission, or his employment with such contractor.

ORNL-2793
UC-37–Instruments
TID-4500 (15th ed.)

Contract No. W-7405-eng-26

INSTRUMENTATION AND CONTROLS DIVISION

# CALIBRATION AND TESTING OF 2- AND 3½-IN. MAGNETIC FLOWMETERS FOR HIGH-TEMPERATURE NaK SERVICE

R. G. Affel G. H. Burger C. L. Pearce

DATE ISSUED

MAR 21 1960

OAK RIDGE NATIONAL LABORATORY
Oak Ridge, Tennessee
operated by
UNION CARBIDE CORPORATION
for the
U. S. ATOMIC ENERGY COMMISSION

MARTIN MARIETTA ENERGY SYSTEMS LIBRARIES

3 4456 0351168 9

## CONTENTS


ABSTRACT ..... 1

1. MAGNETIC FLOWMETERS: GENERAL ..... 1

1.1 Application ..... 1
1.1.1 Advantages in Using Magnetic Flowmeters ..... 1
1.1.2 Disadvantages in Using Magnetic Flowmeters ..... 2

1.2 Principle of Operation ..... 3

1.3 Practical Design Considerations ..... 5
1.3.1 Flux Density Requirements ..... 5
1.3.2 Thermal Isolation of Magnets from Pipe ..... 5
1.3.3 Magnet Material ..... 5
1.3.4 Flux Measurement ..... 5
1.3.5 Magnet Stabilization ..... 5
1.3.6 Magnet to Signal Electrode Geometry ..... 6
1.3.7 Uniformity of Field ..... 6
1.3.8 Pole Face to Pipe Diameter Requirement ..... 6
1.3.9 Pole Face Height to Pipe Diameter Requirement ..... 6
1.3.10 Signal Electrodes ..... 6

1.4 ORNL Flowmeters ..... 6
1.4.1 Pipe Section ..... 9
1.4.2 Stoppering of Pipe ..... 9
1.4.3 Signal Electrodes ..... 10
1.4.4 Thermal Isolation of Magnet from Pipe ..... 10
1.4.5 Magnet Assembly ..... 10
1.4.6 Magnet Temperature Thermocouples ..... 10
1.4.7 Measurement of Flux Density ..... 10
1.4.8 Magnet Stabilization ..... 12
1.4.9 General Construction ..... 12

1.5 Theoretical Flow Equation ..... 12
1.5.1 Pipe Wall Correction Factor ..... 13
1.5.2 Correction Factor for Magnet-Pole-Face End Effects ..... 14
1.5.3 Correction Factor for Pipe Thermal Expansion ..... 14
1.5.4 Nonwetting Correction ..... 14
1.5.5 Application of Corrected Theoretical Flow Equation ..... 15
1.5.6 The $Y$ Factor ..... 15

ORNL MAGNETIC FLOWMETER TESTS ..... 17

2.1 History ..... 17

2.2 Objectives ..... 17

2.3 Description of Test Conditions and Procedures ..... 17
2.3.1 Calibration Runs ..... 18
2.3.2 Test Range ..... 18

2.4 Description of Test Loops ..... 18
2.4.1 Shielding ..... 18
2.4.2 Filling Loop ..... 18
2.4.3 Temperature Control ..... 18
2.4.4 Cold Trapping ..... 18

2.4.5 Flow Control ..... 20
2.4.6 Magnetic Flowmeter Calibration Section ..... 20
2.4.7 Loop Measurements ..... 20
2.4.8 Instrumentation ..... 20
2.4.9 Synchronization of Recorded Output ..... 24

2.5 Measurement and Control of Calibration Parameters ..... 24
2.5.1 Flow ..... 24
2.5.2 Voltage ..... 25
2.5.3 Temperature ..... 26
2.5.4 Magnetic Flux Density ..... 26
2.5.5 Flowmeter Alignment ..... 27
2.5.6 NaK and Inconel Physical Constants ..... 27

3. MAGNETIC FLOWMETER TEST AND CALIBRATION RESULTS ..... 30

3.1 General Test Results and Operating Notes ..... 30
3.1.1 Accrued Operating Time ..... 30
3.1.2 Agreement of the Three Output Elements ..... 30
3.1.3 Use of Separate Recorders ..... 30
3.1.4 Noise ..... 30
3.1.5 Transient Response ..... 30
3.1.6 Shorting of Output Leads ..... 30
3.1.7 Flux Coil Holder ..... 30
3.1.8 Movement of Signal Electrode ..... 31
3.1.9 Magnet Thermal Insulation ..... 31
3.1.10 Thermal EMF's ..... 31
3.1.11 Indication of Low Flow Rates ..... 31
3.1.12 Compression of Magnet Assembly Insulating Spacers ..... 31
3.1.13 High Temperature Connectors ..... 31
3.1.14 Fluid and Magnet Temperature Effects on Output ..... 31

3.2 Magnetic Flux Density Effects ..... 31
3.2.1 Air Gap Flux Density vs Magnet Temperature ..... 32
3.2.2 Flux Density Stability Data for 3½-in. Magnetic Flowmeters ..... 33
3.2.3 Flux Density Stability Data for 2-in. Magnetic Flowmeters ..... 36
3.2.4 Experimental Air Gap Flux Density vs Magnet Temperature for 3½-in. Units ..... 38
3.2.5 Experimental Air Gap Flux Density vs Magnet Temperature for 2-in. Units ..... 40
3.2.6 Experimental Air Gap to Leakage Flux Density Ratio ..... 40

3.3 Fluid Temperature Effects ..... 42
3.3.1 Experimental Determination of $Y$ Factor ..... 42
3.3.2 Experimental $Y$ Factor for 3½-in. Units ..... 46
3.3.3 Experimental $Y$ Factor for 2-in. Units ..... 50
3.3.4 Comparison of Experimental $Y$ Factor with Theoretical $Y$ Factor ..... 51

3.4 Pipe Wetting Effects ..... 52
3.4.1 Wetting Effects Upon Initial Operation ..... 52
3.4.2 Wetting Run on 2-in. Flowmeters – Lot No. 2 ..... 52

3.5 Apparent Sensitivity Change in the 2-in. FE-1 During Lot No. 1 Operation ..... 53

3.6 Operation at Magnet Temperature to 700°F ..... 54

4. CONCLUSIONS AND RECOMMENDATIONS ..... 55
4.1 Calibration ..... 55
4.1.1 Linearity ..... 55
4.1.2 Reproducibility ..... 55
4.2 Comparison of Experimental Results with Theoretical Calculations ..... 55
4.3 Effects of Temperature and Handling ..... 56
4.4 Long-Term Reliability ..... 56
4.5 Wetting of Pipe Walls ..... 57
5. BIBLIOGRAPHY ..... 58
6. APPENDIX ..... 59

# CALIBRATION AND TESTING OF 2- AND 3 1/2-IN. MAGNETIC FLOWMETERS FOR HIGH-TEMPERATURE NaK SERVICE

R. G. Affel G. H. Burger C. L. Pearce

**ABSTRACT**

High-temperature calibration tests were made involving 12 magnetic flowmeters of 2-in. sched-40 pipe size and 12 magnetic flowmeters of 3½-in. sched-40 pipe size with NaK as the flow medium. Ten of each type of unit were calibrated against a venturi water-calibrated to an accuracy of 0.25%, over periods of operation to 3000 hr. The two remaining units of each type were not operated, but the magnet air gap flux density was monitored to detect changes for comparison with the operated units. The results of the calibration are tabulated and discussed.

Background material on magnetic flowmeter application, design, and theoretical principles from the literature is included.

## 1. MAGNETIC FLOWMETERS: GENERAL

Magnetic flowmeters have been described and analyzed as to various aspects in the literature. The literature listed in the bibliography has been freely drawn upon to provide the following discussion of magnetic flowmeter general characteristics, principles of operation, and theoretical flow equations as background for the test and calibration results which follow.

### 1.1 APPLICATION

Magnetic flowmeters are widely used to measure flow in liquid metals of a highly corrosive nature at extremely high temperatures. Liquid metals such as sodium, sodium-potassium, sodium-lead, lead-bismuth, and lithium are now used in various industrial applications, as well as for heat-transfer fluids in reactor systems. In reactors the measurement of fluid flow may assume prime importance. Most conventional flow sensors are not immediately useful in these applications since the presence of a detecting element in the flowing fluid may be undesirable because of one or more of the following factors:

1. fouling of the detecting element due to deposition of oxides,
2. failure or inaccuracy due to extreme temperatures,
3. failure or inaccuracy due to corrosion,
4. insulation destruction from high radiation levels which may be present,
5. complication of attainment of an all-welded system which is required in some liquid metal applications,
6. difficulty in installation and removal from the system.

Also, conventional flow systems may be undesirable since external system piping or secondary elements which generally reduce system accuracy may be required.

The turbine flowmeter using a turbine inserted in the flow pipe shows promise toward overcoming some of the afore-mentioned difficulties but has not been perfected as of this date. Ultrasonic techniques have been successfully applied to liquid-metal flow measurements but have not yet been adapted to the extremely high temperatures.

The magnetic flowmeter has proved to overcome some of the difficulties experienced with other flow instruments in liquid-metal applications.

#### 1.1.1 Advantages in Using Magnetic Flowmeters

Some of the advantages of the magnetic flowmeter are the following:

1. all-welded construction requirement is easily attainable,
2. no additional piping is required,
3. magnet may be removed or replaced without disturbing system piping,
4. has no moving parts,

5. withstands high temperatures normally present in liquid-metal loops,
6. only a commercial d-c recorder is required as external equipment,
7. very little maintenance required,
8. cost is relatively low,
9. size and weight of assembly are relatively small,
10. introduces a negligible pressure drop into system,
11. approach conditions appear to have little effect on accuracy,
12. has wide dynamic flow range,
13. has high speed of response to transients in flow,
14. only connection to flow system is an electrical cable,
15. multiple signal outputs possible on the same flowmeter,
16. inherent reliability of flow indication is high,
17. accuracy approaching 1% is theoretically possible,
18. calculation of output of flowmeters from theoretical considerations to attain high accuracy without calibration appears possible,
19. has favorable output signal characteristics, including (a) d-c voltage output is high enough to be used without amplification in most cases, (b) continuous output gives continuous monitoring which may be used with magnetic amplifiers or other devices for control purposes, (c) voltage output is linear with flow, with zero signal for zero flow, (d) signal output is suitable for use with commercial potentiometer type or millivolt recorder instruments without modification, and (e) output signal magnitude and internal impedance of the units are similar to those of a thermocouple.

### 1.1.2 Disadvantages in Using Magnetic Flowmeters

The disadvantages which may appear in the application of magnetic flowmeters are as follows:

1. The instrument is temperature-sensitive in two respects: (a) flowmeter output varies with flowing fluid temperature and (b) flowmeter output varies with magnet temperature. Temperature sensitivity requires that the fluid temperature and the magnet temperature be monitored and corrections applied for high accuracy.

2. The accuracy with which air gap flux density is measured and maintained depends on the following factors:

(a) carefully establishing and maintaining magnet to pipe mounting geometry,
(b) measuring the magnetic field precisely,
(c) using extreme caution in handling flowmeters so as not to introduce a change in flux density characteristics,
(d) carefully arranging installation of flowmeters so as to avoid mechanical shock to the magnets, and using nonmagnetic tools in installation,
(e) never using magnetic flowmeters in the presence of high magnetic fields or large quantities of magnetic material,
(f) periodically checking the air gap flux density, since long term flux stability is uncertain and magnetic field strength is subject to some change with time,
(g) continuously monitoring flux density, which, however, may be replaced by monitoring magnet temperature and relating it to the flux density,
(h) designing flowmeter to provide as low a temperature as possible for the magnet in order to minimize flux density changes due to temperature.

3. The output depends upon wetting of the flow pipe walls. The degree of wetting may be difficult to determine. Also, contamination of the inner pipe wall by foreign material may affect the output. These effects may introduce an uncertainty into the calculations. The final accuracy and reliability of flow measurement depend upon how well these factors are known and controlled.

4. The electrical resistivities of the pipe and the fluid affect the output signal. These parameters are not accurately known for all materials used in liquid-metal work and are temperature-related. Even if initially known accurately, the resistivities may change due to contamination or physical changes in materials.

5. Accurate measurements of pipe dimensions are needed in calculating the output. The pipe wall thickness and the diameter of the pipe affect the output. The changes in pipe dimensions due to thermal expansion and other irreversible effects are factors which must be considered.

6. The pipe should have high electrical resistivity in relation to fluid for this type of flowmeter.

7. The flowmeter must be specifically designed for the particular pipe material, pipe dimensions, and fluid.

In using the magnetic flowmeter where high accuracy (greater than 10%) is not a criterion, most of the afore-mentioned objections are not applicable. Indeed, the greatest application of the instrument to date has been for low accuracy requirements where a relative indication of flow is sufficient. Many reactor systems and high-temperature loops using liquid metals employ magnetic flowmeters for relative flow measurements.

The objections and uncertainties connected with magnetic flowmeters become important factors when the accuracy requirement becomes stringent. Many of the objections to the flowmeter can be overcome by calibration in a loop which closely simulates actual operating conditions, but this may prove expensive in certain cases. If a continuous flux monitor may be applied to the units, the use of the flowmeter is further simplified and other objections are overruled. However, the units themselves might be complicated considerably by the addition of a continuous flux monitor.

## 1.2 PRINCIPLE OF OPERATION

The operation of the magnetic flowmeter is similar in principle to that of a d-c generator. A d-c output voltage is generated across the flow pipe by the conducting fluid moving through the pipe at right angles to a magnetic field established across the pipe.

The principle upon which the operation is based is Faraday's law of induced voltage: "If a magnetic field is established across a region in which a medium is in motion, a potential is developed across the medium which is proportional to its velocity and the strength of the magnetic field." Faraday's equation upon which magnetic flowmeter operation is based is given below:

*FARADAY'S EQUATION*

$$E = Blv \times 10^{-8} \quad , \qquad (1)$$

where

$E$ = output voltage, v,

$B$ = flux density, gauss,

$l$ = length of conductor, cm,

$v$ = velocity of conductor, cm/sec.

This equation describes the voltage output expected for a conductor moving through a magnetic field in a direction orthogonal to its length and to the magnetic field. In the idealized case of the magnetic flowmeter the conductor is a cross section of the flowing fluid. In applying Faraday's law to a magnetic flowmeter, the magnetic field of known flux density $B_a$ is established diametrically across the flow pipe by a permanent magnet. The medium is the flowing fluid which moves through the pipe at right angles to the magnetic field. A potential $E$ proportional to flux density $B_a$ and flow velocity $v$ is developed across diametrically opposite points on the pipe, orthogonal to the field and to the direction of flow (see Fig. 1).

The length $l$ of this conductor may be said to be $d$, the inner diameter of the pipe in centimeters. If the output voltage $E$ is expressed in millivolts, and $B_a$ in gauss, Faraday's law can be rewritten for the idealized case of the flowmeter as follows:

*FLOW VELOCITY EQUATION*

$$E = B_a dv \times 10^{-5} \quad . \qquad (2)$$

It may be seen that ideally for a particular magnetic flowmeter where the flux density and the inner diameter of the pipe are accurately known, the output voltage varies directly with the velocity of the fluid flow in the pipe.

By relating velocity to a volumetric flow rate for a pipe with a particular diameter, the equation may be written in terms of volumetric flow rate rather than flow velocity.

The volume of fluid $V$ moving past a point in time $t$ is equal to the pipe cross-sectional area $A$ times the distance $D$ that the fluid travels in time $t$:

$$V = AD \quad .$$

Dividing through by $t$ the volumetric flow rate $Q$ is obtained which is equal to volume per unit time:

$$Q = \frac{V}{t} = \frac{AD}{t} \quad .$$

Distance per unit time $D/t$ is the flow velocity $v$. This gives

$$Q = Av \quad ,$$

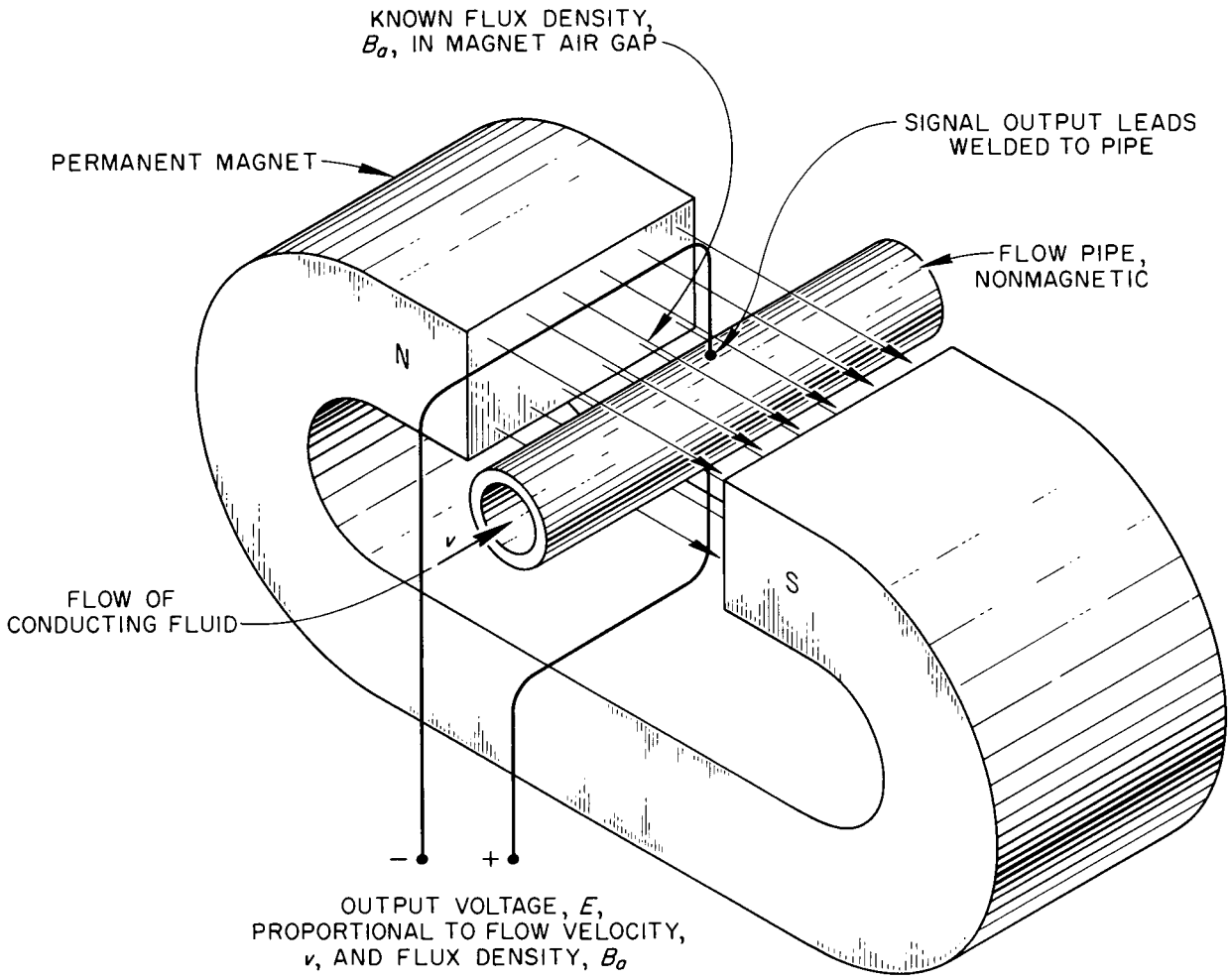


**Fig. 1. Magnetic Flowmeter Principle.**

or

$$v = \frac{Q}{A} .$$

The pipe cross-sectional area is

$$A = \frac{\pi d^2}{4} ,$$

where $d$ is the inner diameter of the pipe. This may be substituted in the equation for flow velocity to give

$$v = \frac{4Q}{\pi d^2} .$$

Substituting this value for flow velocity in the Faraday equation for flow output voltage yields the following volumetric flow-rate equation:

*VOLUMETRIC FLOW EQUATION*

$$E = \frac{4B_a Q \times 10^{-5}}{\pi d} , \qquad (3)$$

where $Q$ is in cubic centimeters per second and the other terms are as defined previously. Usually in reactor applications the volumetric flow rate is desired in practical units, gallons per minute, and the pipe inner diameter is given in inches. By applying the conversion factors from centimeters

$$\frac{(4)(10^{-5})(3785)}{\pi(2.54)(60)}$$

to inches, seconds to minutes, and cubic centimeters to gallons, the following equation is obtained in practical units:

*VOLUMETRIC FLOW EQUATION IN PRACTICAL UNITS*

$$E = \frac{B_a Q}{3162d} \cdot \qquad (4)$$

This is the flow equation for a highly idealized situation, with output voltage measured on the inner diameter of the nonconducting flow pipe in a uniform field.

## 1.3 PRACTICAL DESIGN CONSIDERATIONS

In the design of practical magnetic flowmeter units for high accuracy, several factors must be taken into consideration in addition to those considerations for flowmeters used where the accuracy requirements are reduced.

### 1.3.1 Flux Density Requirements

One of the requirements for applying the flowmeter principle is that the air gap flux density in the vicinity of the signal electrodes must be known to somewhat better accuracy than that expected of the units. This requirement may be met most directly by arranging to monitor the flux density continuously during operation. The installation of such a flux monitoring device, however, may complicate the design of the flowmeter considerably. An alternative to directly measuring the flux is to establish the air gap flux density in the vicinity of the signal electrodes at room temperature and then to rely upon the stability of the magnetic circuit to maintain a constant room-temperature flux density.

### 1.3.2 Thermal Isolation of Magnets from Pipe

The temperature at which the magnets must operate is of great importance since magnet strength is a function of temperature and any change in strength of the magnets affects the accuracy of the units.

The magnet should be thermally isolated from the hot pipe as much as possible to minimize magnet temperature excursions and thereby reduce flux density changes. Excessive magnet temperatures may also permanently damage the magnets or cause irreversible flux density changes.

### 1.3.3 Magnet Material

Alnico V is the usual choice of magnet material for this application for several reasons. It has the highest energy product of any commercial-grade magnet material and is anisotropic, having directional characteristics making it possible to obtain higher fields and better stability with smaller magnets. Perhaps even more important is the fact that it has a small temperature coefficient of flux density. According to the manufacturer (*1*) it loses approximately 1.1% of its flux per 100°F temperature rise below about 600°F. Metallurgical changes for Alnico V which would produce irreversible flux density changes are negligible until temperatures over 1000°F are reached. A typical curve of per cent flux change vs magnet temperature is shown in Fig. 2. By using a similar curve for the particular flowmeter magnet and by monitoring the magnet temperature by means of thermocouples attached to the magnets, it is possible to correct for temperature change of flux density during operation.

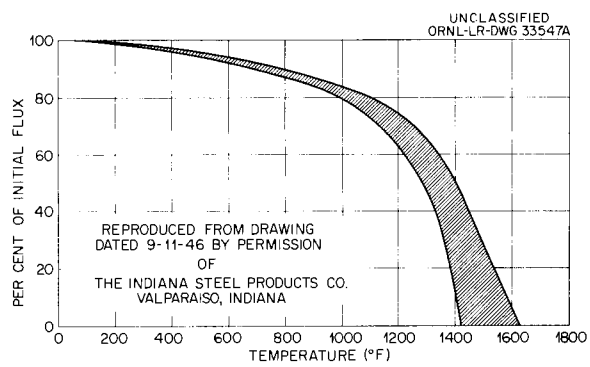


**Fig. 2. Flux vs Temperature – Alnico V.**

### 1.3.4 Flux Measurement

Means must be provided to measure air gap flux density upon initial installation and periodically during operation. The magnet assembly may be built so as to swing down and allow access to the air gap, or the leakage flux may be measured and related to air gap flux so that direct air gap flux measurement will not be necessary.

### 1.3.5 Magnet Stabilization

In order to minimize changes in flux density during installation and operation, magnet stabilization procedures should be followed. The magnet

may be magnetically stabilized against shock and heat cycling by demagnetization to 5% below saturation and then subjecting it to temperature cycling and mechanical shocks in excess of those normally expected in service. The temperature cycling procedures should be repeated until stable, reproducible curves are obtained for flux density vs magnet temperature.

### 1.3.6 Magnet to Signal Electrode Geometry

Another design consideration in connection with maintaining known flux density in the vicinity of the signal electrodes is that of maintaining the magnetic field to signal lead geometry throughout installation and operation of the units, while allowing for thermal expansion, creep, sag, and vibration of the pipe. Rotation of the pipe in the magnetic field changes the 90° relation of signal electrodes with the field and will reduce the output voltage. The output voltage varies as a sine function of the angle that the signal output pipe diameter makes with the field. Longitudinal and vertical movement of the signal electrodes in the magnetic field will reduce the output due to nonuniform field and to changes in magnet end effects. It is important in a practical design to reduce these movements of signal electrodes with respect to the field to an absolute minimum. The magnet may be clamped to the pipe by a suitable insulating arrangement and the entire flowmeter assembly supported external to the pipe by a counterbalance system. This allows the magnet to move with the pipe, as it creeps and sags with temperature, while not requiring the pipe to support the weight of the magnet.

### 1.3.7 Uniformity of Field

Another requirement is that the magnetic field be as uniform as possible so that the effects of signal electrode movement in the field will be minimized, so that determination of the flux density in the vicinity of signal electrodes will be simplified, since a measurement anywhere in the uniform portion of the field will apply to the signal electrodes, and so that there will be no potential gradients in the flowing fluid to produce currents which will affect the signal output.

### 1.3.8 Pole Face to Pipe Diameter Requirement

The magnetic field should extend as far as is practical axially along the pipe in order to reduce the current due to the potential gradient caused by magnetic pole face end effects. The magnet pole face should be at least three pipe diameters long to reduce this effect to a minimum.

### 1.3.9 Pole Face Height to Pipe Diameter Requirement

The pole face should include the entire pipe and preferably should be as much wider as is practical. This requirement is necessary to minimize nonuniformities of the field normal to the direction of flow.

### 1.3.10 Signal Electrodes

The signal electrodes should be of the same material as the pipe to reduce the thermal emf if the fluid temperature is to be high. The signal electrodes should be carefully located at opposite ends of a pipe diameter normal to the field and in the geometric center of the air gap.

## 1.4 ORNL FLOWMETERS

Early in 1956 specifications were issued by ORNL for magnetic flowmeters to be used to measure the flow of NaK (56% Na, 44% K by weight) in 2- and 3½-in. sched-40 Inconel pipes at fluid temperatures from 750 to 1600°F and at flow rates of 45 to 600 and 45 to 1400 gpm, respectively. These units were to operate 3000 hr at ambient temperatures of from 100 to 560°F, maintaining flow accuracy within 3½% of flow for the 3½-in. units and within 1% of flow at 45 to 200 gpm and 5% of flow at 200 to 600 gpm on the 2-in. units. The minimum sensitivity of the units was specified as 0.0666 mv/gpm for the 2-in. units and 0.0285 mv/gpm for the 3½-in. units. Normal conditions for which the units were specified were the following:

| | |
|---|---|
| Fluid temperature | 1300°F |
| Ambient temperature | 350°F |
| 2-in. flow rate | 200 gpm |
| 3½-in. flow rate | 1200 gpm |

Complete specifications on the units are included in the Appendix. These flowmeters were designed and built by the General Electric Company according to theoretical considerations as derived by Gray and Astley (*2–4*). Twelve 2-in. units (Fig. 3) and twelve 3½-in. units (Fig. 4) were built according to ORNL specifications.

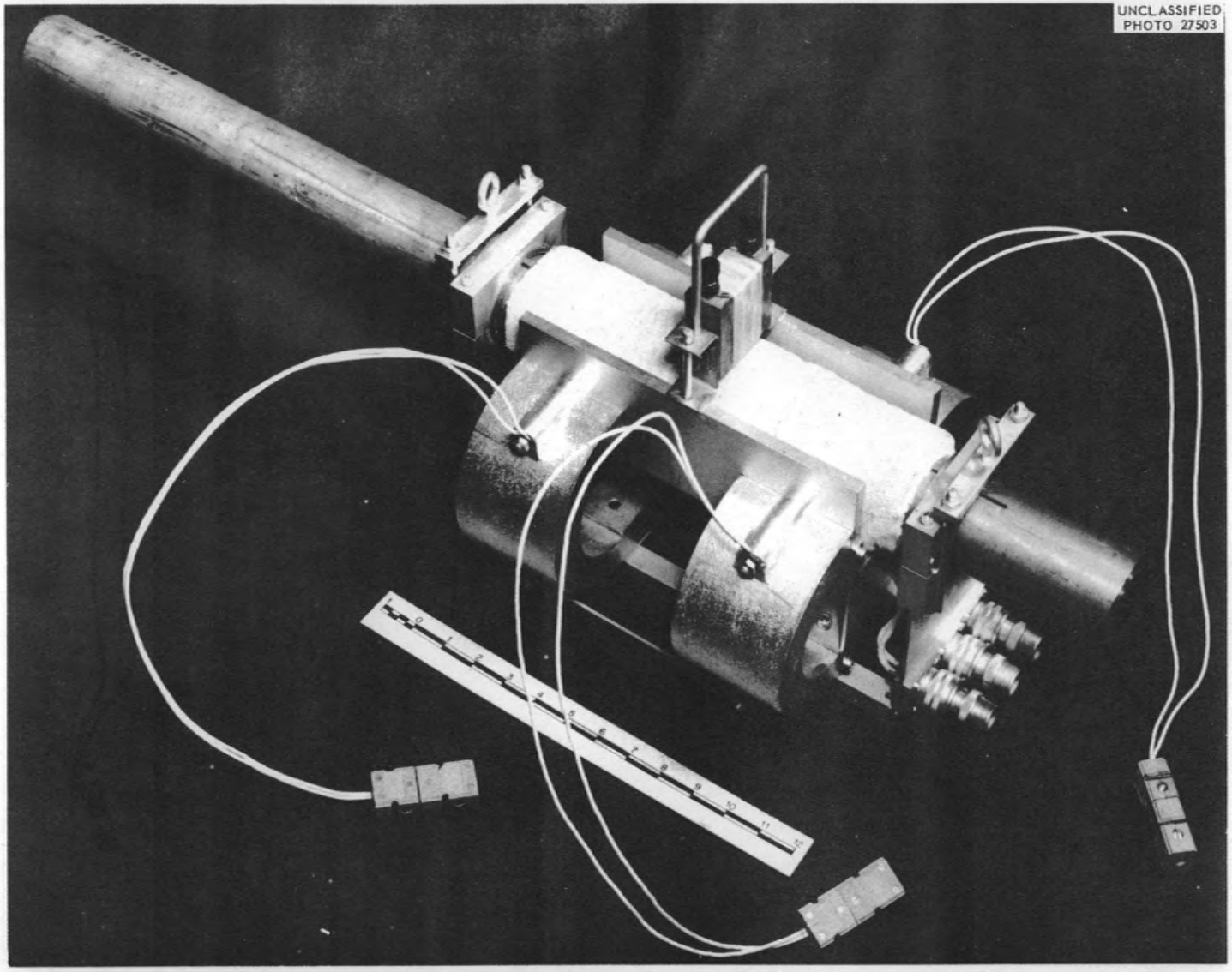


Fig. 3. Photograph of 2-in. Magnetic Flowmeter with Leakage Flux Coil in Place.

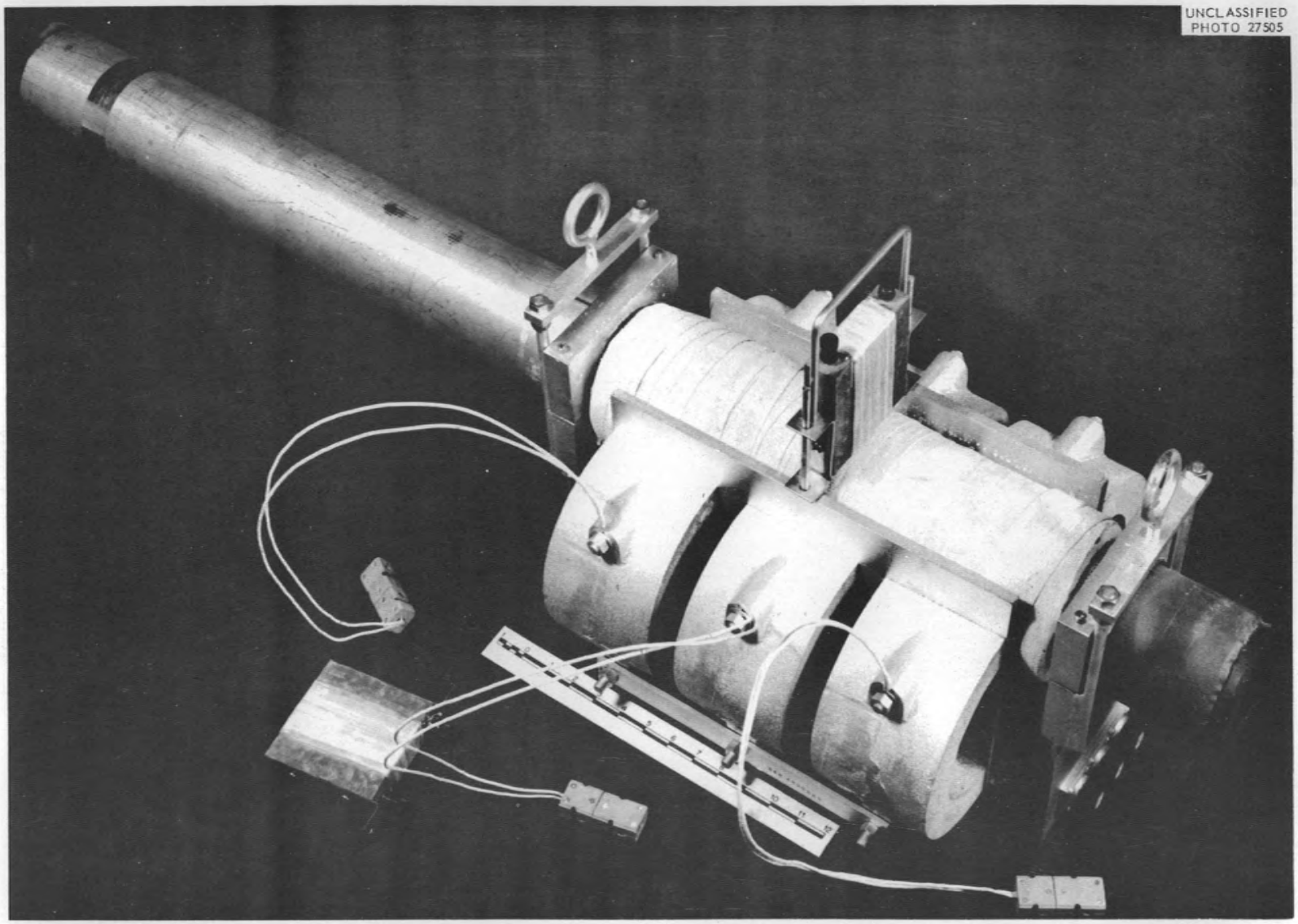


Fig. 4. Photograph of $3\frac{1}{2}$-in. Magnetic Flowmeter with Leakage Flux Coil in Place – Air Gap Flux Coil Shown.

A $\frac{3}{8}$-in. flowmeter (Fig. 5) was also designed at ORNL and was required to have an accuracy of within ±15% over essentially the same temperature ranges as the units above.

### 1.4.1 Pipe Section

The $3\frac{1}{2}$-in. unit is built on a 48-in. length of $3\frac{1}{2}$-in. sched-40 Inconel pipe (4.000 in. nominal OD and 3.548 in. nominal ID) and the 2-in. unit on a 36-in. length of 2-in. sched-40 Inconel pipe (2.375 in. nominal OD and 2.067 in. nominal ID) provided by ORNL after thorough x-ray, Dy-chek, and ultrasonic inspection. The direction of flow is toward the short end of the pipe. Approximately 10 pipe inner diameters of straight section are upstream of the signal electrodes and approximately 4 pipe inner diameters downstream for the $3\frac{1}{2}$-in. units. The straight sections of pipe are specified in order to provide a symmetrical flow velocity distribution in the pipe as required by the modified flow equation. For the 2-in. units approximately 12 pipe inner diameters are in the straight section upstream and approximately 5 are downstream.

### 1.4.2 Stoppering of Pipe

Rubber plugs are provided to stopper the pipe ends until installation to prevent unnecessary foreign material, iron filings, etc., from contaminating the pipe and preventing total wetting by the

UNCLASSIFIED
PHOTO 28836

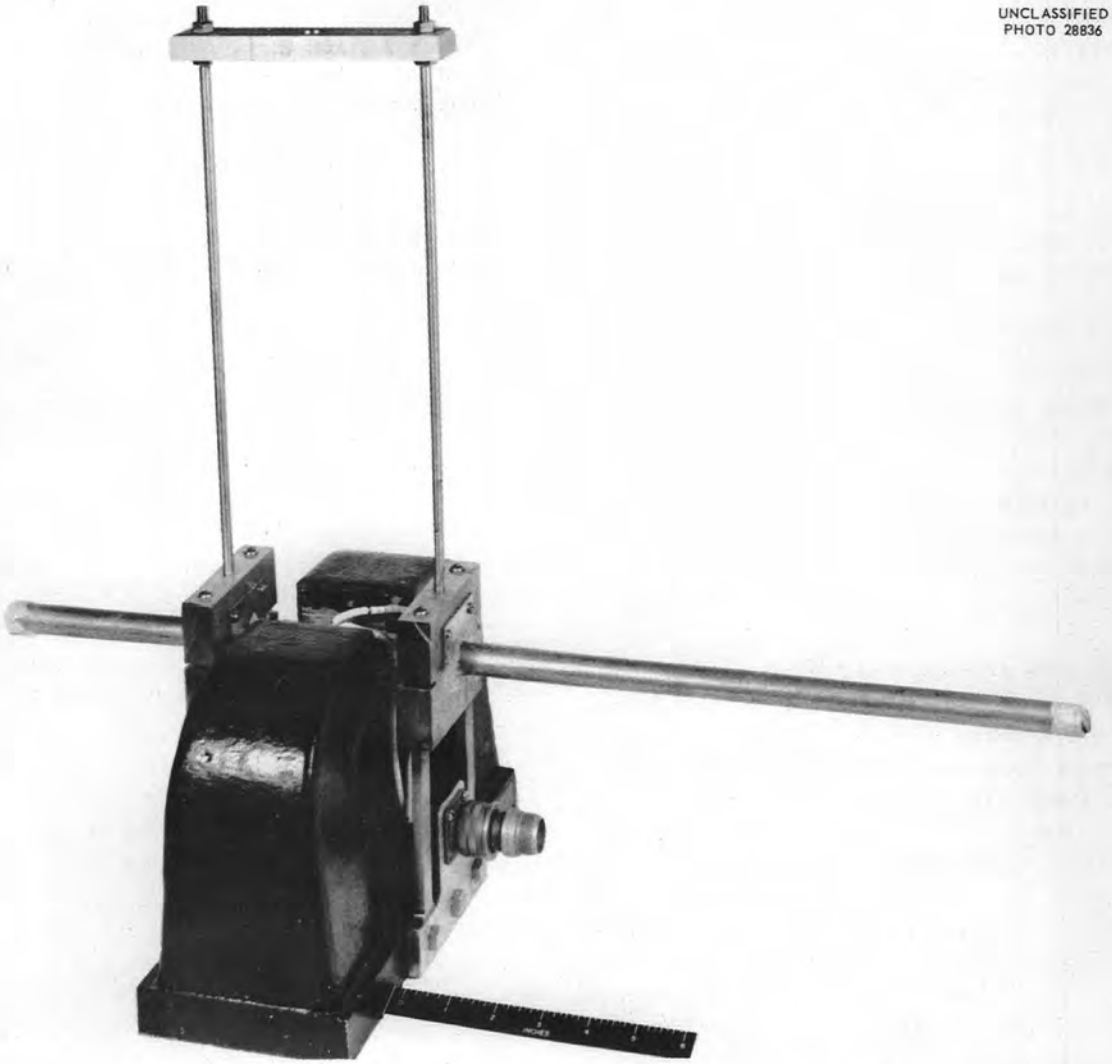

**Fig. 5. Photograph of $\frac{3}{8}$-in. Magnetic Flowmeter with Hanger for Counterbalance System.**

flowing fluid. Scotch tape should not be used because of chloride compounds used in the glue.

### 1.4.3 Signal Electrodes

Three sets of signal electrodes are incorporated in this unit to provide two auxiliary or spare outputs in addition to the normal output. These electrodes are welded on the top and bottom of the pipe and are located in the geometrical center of the magnet air gap, approximately $\frac{1}{8}$ in. apart center to center. The electrodes are connected to three high-temperature connector fittings by Inconel wire 0.062 to 0.070 in. in diameter which is insulated by high-temperature ceramic beads. The Inconel wire was supplied by ORNL to match the pipe material composition, thus preventing thermal potentials being generated at the signal electrode due to thermal gradients. The signal leads were attached to the pipe by the inert-gas-shielded tungsten d-c arc welding process. A sufficient amount of inert backup gas was flowed through the pipe during welding to prevent oxidation. All welds were dye-penetrant inspected and were visually inspected for oxidation and the presence of fused metal.

### 1.4.4 Thermal Isolation of Magnet from Pipe

The section of the pipe which is in the magnet air gap is covered with a thermal insulating wrapping consisting of Fibrefrax insulation sandwiched between two reflecting layers of foil. The insulating layer is wrapped with asbestos cloth which is soaked with phospho-asbestos solution to allow it to harden in place.

### 1.4.5 Magnet Assembly

The magnet assembly consists of three magnets spaced along flat, rectangular, parallel pole faces, which disperse the magnetic field from the three magnets to provide as uniform a field as practical. The assembly is attached to the pipe by two clamps, thermally insulated from the pipe by alternate layers of stainless steel shim stock and wire mesh. The entire magnet assembly is painted with reflecting paint in order to further thermally isolate it from the pipe. The 2-in. magnet assembly, which is similar to the $3\frac{1}{2}$-in. units, is shown with the thermal insulation and clamps in the exploded view in Fig. 6. The pipe is placed in the magnet assembly and positioned properly with respect to signal electrode geometry. Ink marks are then scribed on the pipe to coincide with scribes on the assembly before the thermal insulation is wrapped on the pipe so that subsequent proper location may be achieved. The clamps are tightened down on the stainless steel shim stock and mesh sufficiently to assure that the pipe cannot slip or twist in operation. Two eye bolts are provided to hoist the unit and to support the unit by a counterbalancing system during operation. The flowmeter should *not* be lifted by the pipe, since possible slippage of the assembly on the pipe will result in inaccuracies.

The entire magnet assembly, exclusive of the magnets and pole pieces, is of nonmagnetic material to prevent field distortion. Nonmagnetic stainless steel having a maximum relative magnetic permeability of 2 is used for all clamps, angles, screws, bolts, etc. Colloidal silver lubricant is used on bolts to prevent galling at high temperatures.

Each magnet is made of two C-sections of cast Alnico V separated by magnet steel spacers. The magnet pole faces are approximately 3 magnet air gaps in length and have heights $\frac{1}{2}$ and 1 in. more than the pipe outer diameter for the $3\frac{1}{2}$- and the 2-in. units, respectively.

### 1.4.6 Magnet Temperature Thermocouples

Three Chromel P–Alumel thermocouples of 20-AWG wire are attached to each magnet assembly for determining the magnet temperature $T_m$ in order to correct for air gap flux density $B_a$ changes with temperature. The thermocouple leads are insulated with high-temperature ceramic beads and supplied with Thermo Electric Company high-temperature type PMESS plugs and type JMESS jacks. The thermocouples are brazed into a slot on a washer which is bolted to the magnet and are numbered for identification.

### 1.4.7 Measurement of Flux Density

The effective magnetic flux density in the air gap may be measured directly by use of one of three calibrated air gap search coils after the pipe is swung up out of the air gap. One air gap search coil is shown in place in the magnet in the exploded view (Fig. 6). Three calibrated leakage flux coils are also provided for determining the magnet flux density of the flowmeter while in operation without the pipe having to be removed. These coils are shown in place in Figs. 3 and 4.

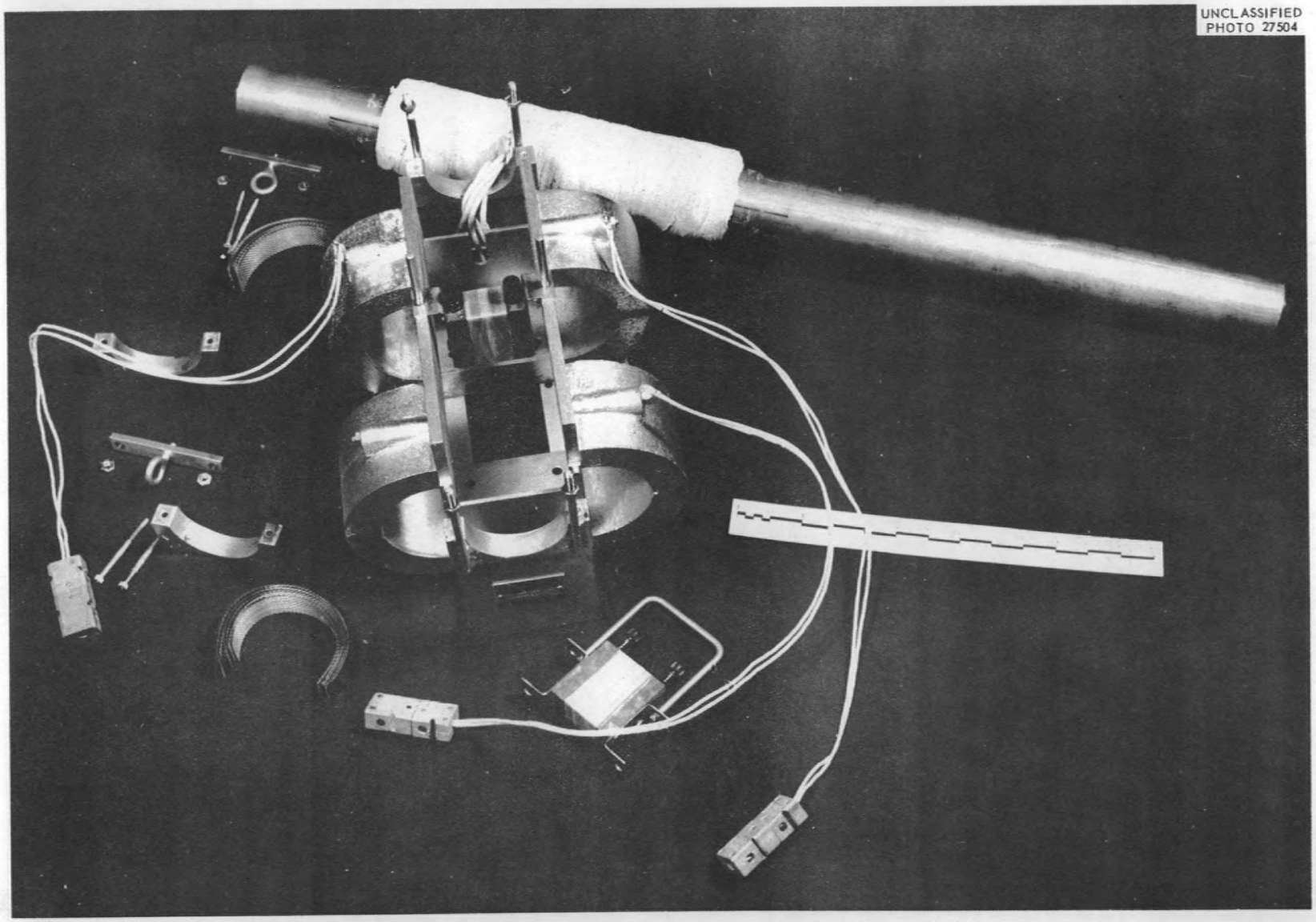


Fig. 6. Exploded View of 2-in. Magnetic Flowmeter Showing Air Gap Flux Coil in Place.

The leakage flux density as measured by this coil may be correlated to the air gap flux density by an air gap to leakage flux ratio which applies to the particular magnet. This method is based on the assumption that a change in the air gap flux will cause a corresponding change in the leakage flux. These search coils may be used with a ballistic galvanometer or with other voltage-integrating devices to measure integrated flux density in an area. The search coil is accurately positioned in the field to be measured by stainless steel studs attached to the pole pieces. The measuring device is zeroed after the search coil is in place. The search coil is withdrawn to a position of zero field. The voltage-integrating device sums the voltage generated by the coil cutting the lines of force of the field which originally linked it. This voltage is a measure of the flux which linked the coil when in position on the studs.

According to Gray and Astley (*2*), the dependence of flowmeter output on flux density at any point in the air gap diminishes rapidly as the point recedes from the central voltage axis, which is the pipe diameter on which the signal electrodes are placed. They state that the effective flux density to be used in calculating flow output may be specified as that indicated by the gradient of flux linkages as determined by a coil of a specific number of turns of wire and specified dimensions. These dimensions, which are the over-all dimensions of the coil of wire itself, are height equal to the pipe inside diameter $d$, length equal to one-half the pipe inside diameter $d$, and width equal to one-half the pipe inside diameter $d$. A coil wound to these dimensions should measure effective flux density within ±0.2% at room temperature. The search coils were designed according to this general criterion.

### 1.4.8 Magnet Stabilization

The magnet assembly was completely assembled with all bolts, clamps, and brackets in place before being magnetically saturated. The magnets were then demagnetized to 5% below saturation, since General Electric field experience (*2*) had proved this to be necessary for stability. This procedure was continued until a repeatable stable minor loop of ½% was obtained.

The assembly was subjected to 10-$g$ shocks until the flux density did not change by more than 1%. The magnets were heated and then cooled to room temperature to make them thermally stable to 842°F. This procedure was repeated three times or as many more times as was necessary in order to get retraceable curves of flux density vs temperature. The flux density curves were supplied with the flowmeter to be used in conjunction with magnet temperature thermocouple output to determine operating magnet flux density.

### 1.4.9 General Construction

The 2-in. units are similar to the 3½-in. units except for employing two magnets to supply the field and for being scaled down in size. For more detailed information on construction, refer to ORNL Instrument Department drawings Q-1718-15 and Q-1718-16 for the 3½-in. units and to Q-1718-17 and Q-1718-18 for their search coils; to Q-1718-13, Q-1718-21, and Q-1718-22 for the 2-in. units and to Q-1718-23 and Q-1718-24 for their search coils (see also G.E. drawings 655C108 and 655C109 in the Appendix).

## 1.5 THEORETICAL FLOW EQUATION

The basic flow equation [Eq. (4)] of Sec 1.2 is for a highly idealized situation which is unattainable in practice. It is impractical to measure the entire output voltage as predicted by this idealized flow equation. Certain corrections must be applied in practice to account for losses in output voltage.

These losses as treated by the complete theoretical flow equation result from fluid and pipe temperature effects, pipe wall shunting effect, magnet pole-face end effects, pipe thermal expansion effects, and pipe nonwetting effects. All these theoretically derived corrections are applied for high-accuracy magnetic flowmeters except for the pipe nonwetting effects. Nonwetting effects, although theoretically calculated, are difficult to apply in practice due to uncertainty in determining the degree and the nature of the nonwetting situation. Therefore, attempts are made to minimize these effects by cleaning the inner walls of the pipe and using preliminary procedures to assure wetting. For operational purposes, the pipe is assumed to be wet and the nonwetting term is not included in the operational theoretical flow equation. The nonwetting term as derived by Gray and Astley (*2*) will be discussed, however, since a degree of error may be introduced without it, should complete wetting not be attained. Also, it may

be important in evaluating flowmeter behavior during initial operation, where wetting procedures may not be practical.

### 1.5.1 Pipe Wall Correction Factor

In a conducting pipe the output signal electrodes are attached to the outside of the pipe, rather than to the inside as in the ideal case. The conducting pipe walls have a shunting effect on the output voltage, causing circulating current flow in the fluid and in the pipe walls in planes normal to the flow axis. Also, radial variations in velocity cause circulating currents due to the different voltages generated at points corresponding to different velocities. The resulting $IR$ decrease reduces the effective output voltage from the value given by the idealized flow output equation.

The thickness of the pipe wall in relation to the diameter of the flow pipe affects the amount of $IR$ loss in output voltage. As the pipe wall thickness increases in relation to pipe diameter, the $IR$ loss increases and the flowmeter output sensitivity, $E/Q$, decreases.

The relative electrical resistivities of the fluid also affect the $IR$ loss in output voltage. The effective output voltage depends upon the ratio, $\rho_f/\rho_w$, where $\rho_f$ is the resistivity of the fluid and $\rho_w$ is the resistivity of the pipe wall, both expressed in the same units. Since resistivity varies with material, the magnitude of this effect varies depending upon the fluid and pipe material used.

Resistivity is temperature dependent, and the thermal coefficient of resistivity varies with material. Thus the thermal coefficient of resistivity of the fluid is different from that of the pipe wall, and the ratio $\rho_f/\rho_w$ will vary with fluid and pipe temperature. The effective output voltage will be temperature dependent through the resistivity ratio affecting the amount of $IR$ loss.

A correction factor must be applied to the output voltage to correct for the $IR$ losses which result from circulating currents caused by voltage gradients from radial variations of flow velocity and from the temperature-dependent shunting effects of the pipe wall.

The wall correction factor theoretically derived by Elrod and Fouse (5) may be used to account for these effects. The factor was derived on the assumptions that

1. the interface resistance between the fluid and the pipe wall is negligible,
2. the fluid velocity distribution is axially symmetric [$v = f(r)$, where $v$ is fluid velocity and $r$ is radial distance from the pipe center],
3. the magnetic field is uniform and infinite in the axial direction.

Subject to these assumptions, the flow equation as derived by Elrod and Fouse with the correction factor represents an exact solution of Maxwell's field equations.

The wall correction factor which reduces the idealized flow equation output voltage by a factor, $K_1$, as rearranged for the purpose of this report is given below:

*PIPE WALL CORRECTION FACTOR*

$$K_1 = \frac{2dD}{D^2 + d^2 + (\rho_f/\rho_w)(D^2 - d^2)}, \qquad (5)$$

where

$K_1$ = wall shunting correction factor in dimensionless units,

$d$ = inner pipe diameter in any units,

$D$ = outer pipe diameter in any units consistent with $d$,

$\rho_f$, $\rho_w$ = resistivity of fluid and pipe wall, respectively, both having the same appropriate units, for the fluid and pipe temperature at which the correction is to be applied.

By applying this correction to the idealized flow equation in practical units, the following equation is obtained:

*FLOW EQUATION WITH WALL CORRECTION*

$$E = \frac{B_a DQ}{1581\,[D^2 + d^2 + (\rho_f/\rho_w)(D^2 - d^2)]}, \qquad (6)$$

where

$E$ = flowmeter output voltage, mv,

$Q$ = flow, gpm,

$B_a$ = air gap flux density, gauss,

$D$ = outer pipe diameter, in.,

$d$ = inner pipe diameter, in.,

$\rho_f$, $\rho_w$ = resistivity of fluid and pipe wall, respectively, both having the same appropriate units, for the pipe and fluid temperature at which the correction is to be applied.

### 1.5.2 Correction Factor for Magnet-Pole-Face End Effects

Note that Eq. (6) assumes a uniform and infinite magnetic field in the axial direction. The assumption neglects the end effects due to a finite magnetic field. The wall correction factor concerns itself only with the effects of currents circulating in planes normal to the flow axis. In a practical flowmeter, of course, the magnetic field is finite and the flux density falls off at the ends of the pole faces. This causes a potential gradient axially along the pipe in the region of the pole face ends and causes currents to circulate in planes axial to the flow and normal to the field. If the circulating currents reach in as far as the signal electrodes, the output voltage will be reduced by some factor, $K_2$, from the idealized flow equation value. The magnitude of this effect depends upon the field distribution axially along the pipe. This field distribution depends to some extent on the ratios of air gap length to pipe diameter and of pole face height to pipe diameter but is primarily a function of the ratio of magnet pole face length to pipe inside diameter (*2*).

The factor $K_2$ may be determined from a curve developed theoretically by Michel, in which $K_2$ is plotted vs the ratio of the magnet pole face length to pipe inside diameter (*3,6*).

A similar curve was derived experimentally by Gray and Astley (*2*) by observing the departure of the output of a homopolar generator, consisting of a metal toroid revolving in a magnet air gap, from the theoretical value due to a change in the ratio of pole face length to toroid diameter. This experiment was not strictly applicable to the situation usually encountered in flowmeters in that both round pole faces and rectangular pole faces were used to obtain different points on the curve, and an asymmetrical spacing of the toroid in the field with an air gap of $2\frac{3}{16}$ in. was used. It was determined, however, that if the pole face is made several pipe diameters long the correction factor $K_2$ will be close to unity. When the ratio of axial pole face length to pipe inner diameter is made greater than 3, the experimental value of $K_2$ is within 1 to 2% of unity.

### 1.5.3 Correction Factor for Pipe Thermal Expansion

Since the flowmeters are used at extreme fluid temperatures, the change in pipe dimensions due to thermal expansion may affect the flow output. By assuming the change in pipe inner diameter $d$ and pipe outer diameter $D$ to be linear with temperature, the diameters $d_t$ and $D_t$ at any temperature may be given in terms of their room-temperature (77°F) values. The diameters $d_t$ and $D_t$ may be expressed at any temperature $t$ in terms of room-temperature values $d$ and $D$ as follows (*2*):

*PIPE DIAMETERS AT TEMPERATURE*

$$D_t = D[1 + \alpha(t - 77)] \quad , \tag{7}$$

$$d_t = d[1 + \alpha(t - 77)] \quad , \tag{8}$$

where

$D_t$ = pipe outer diameter at pipe temperature $t$,

$D$ = pipe outer diameter at pipe temperature of 77°F,

$d_t$ = pipe inner diameter at pipe temperature $t$,

$d$ = pipe inner diameter at pipe temperature of 77°F,

$\alpha$ = average thermal coefficient of expansion for the pipe material over the range from 77°F to the pipe temperature expressed in in.·in.$^{-1}$·(°F)$^{-1}$.

By incorporating the above corrections given for pipe thermal expansion by Eqs. (7) and (8) and the magnet pole face end effect correction factor $K_2$ into Eq. (6), the following theoretical flow equation generally applied to magnetic flowmeter operation is obtained (*2*):

*CORRECTED THEORETICAL FLOW EQUATION*

$$E = \frac{B_a Q D K_2}{1581} [1 + \alpha(T_f - 77)]^{-1} \times \left[ D^2 + d^2 + \frac{\rho_f}{\rho_w}(D^2 - d^2) \right]^{-1} . \tag{9}$$

### 1.5.4 Nonwetting Correction

Equation (9) describes the output of the flowmeter for the usual operational case. The inside of the pipe wall is assumed by the equation to be completely wetted by the fluid, with no contact resistance between fluid and wall. Cases may arise, however, such as initial runs at low temperatures or in using various fluids, where it may be necessary to consider the nonwetting effects due

to precipitation of oxides on walls or other wall contamination factors. The derivation of flowmeter output by Astley (4) assumed the presence of a thin cylindrical shell of electrical resistivity $\rho_c$ and thickness $\Delta t/2$ just inside the pipe wall due to nonwetting. The thickness of this shell goes to zero for the complete wetting condition. To include nonwetting effects, Eq. (9) could be rewritten as follows:

*THEORETICAL FLOW EQUATION INCLUDING NONWETTING CORRECTION*

$$E = \frac{BQDK_2}{1581}[1 + \alpha(T_f - 77)]^{-1} \times$$

$$\times \left[(D^2 + d^2)\frac{(d - \Delta t)^2}{d^2} + \frac{\rho_f}{\rho_w}(D^2 - d^2) + \right.$$

$$\left. + \frac{\rho_c}{\rho_w}(D^2 - d^2)\frac{d^2}{(d - \Delta t)^2 - 1}\right]^{-1}, \qquad (10)$$

where the units are the same as in Eq. (9) with these additions: $\rho_c$ is the resistivity of the cylindrical wetting shell in the same units as $\rho_w$, and $\Delta t/2$ is the thickness of the cylindrical wetting shell in inches. This equation shows that high contact resistance between fluid and wall may greatly reduce the output voltage. This film must be monomolecular in nature if its resistivity is of the order of $10^6$ ohms or greater, if the nonwetting effect is to remain small (4). With films of such high resistivity the pipe will appear either wet or nonwet with no degree of wetting available (2). There may be cases, however, where the contact resistance will be due to a contaminating layer of foreign material of lower resistance, in which case Eq. (10) could be applied to predict the effect of the nonwetting layer on output.

### 1.5.5 Application of Corrected Theoretical Flow Equation

The magnetic flowmeter sensitivity $E/Q$ in millivolts per gallon per minute is given by dividing Eq. (9) through by $Q$. The flowmeter sensitivity is determined at room temperature (77°F) by the choice of pipe inner and outer diameters $D$ and $d$; the ratio of length of pole face to pipe diameter, determining $K_2$; the air gap flux density $B_a$; and the relative resistivities of the flow fluid, $\rho_f$, and of the pipe wall, $\rho_w$.

For a specific flowmeter these room-temperature values are fixed. Usually, however, the flowmeter will be operated at elevated temperatures. Elevated operating temperatures may result from high operating enclosure ambient temperatures, high fluid temperatures, or a combination of the two. The magnets assume a temperature which depends upon both the ambient temperature and the fluid temperature, although the magnet is usually thermally insulated from the pipe as much as possible. The effect of high magnet temperature $T_m$ is to reduce the air gap flux density $B_a$, thereby reducing flowmeter sensitivity. High fluid temperature affects sensitivity in two other ways: The pipe temperature, which may be assumed in most cases to be close to the fluid temperature, determines the value of the thermal expansion correction to the pipe inner and outer diameters, affecting flowmeter sensitivity. The relative values of the resistivity of the fluid and of that of the pipe wall, as previously explained, depend upon fluid and pipe temperatures, which may be assumed, without great error in most high-temperature applications, to be the same.

Therefore it may be seen that there are two more or less independent factors which determine the operating sensitivity of a specific magnetic flowmeter, the magnet temperature $T_m$ and the fluid temperature $T_f$ The magnet temperature affects sensitivity through air gap flux density $B_a$, and the fluid temperature affects it through resistivity ratio and thermal pipe expansion correction.

### 1.5.6 The $Y$ Factor

For operating convenience all the fluid temperature effects of Eq. (9) are lumped into one factor called the $Y$ factor, which is given below:

*Y FACTOR*

$$Y = \frac{1581[1 + \alpha(T_f - 77)]}{DK_2}\left[(D^2 + d^2) + \right.$$

$$\left. + \frac{\rho_f}{\rho_w}(D^2 - d^2)\right]. \qquad (11)$$

With the same units as in Eq. (9), $Y$ is given in gallons per minute times gauss per millivolt.

Several publications are listed in the bibliography which provide complete derivations of the above

relations along with detailed discussions of theoretical considerations affecting flow output.

The operating equation is then simplified to

$$\frac{E}{Q} = \frac{B_a}{Y} \, . \tag{12}$$

The sensitivity of the units then depends upon $B_a$, which varies with magnet temperature, and upon $Y$, which varies with fluid temperature.

The flux density $B_a$ may be monitored directly or, as is usually the case, related to magnet temperature by a curve of $B_a$ vs $T_m$. A similar curve is derived for the specific flowmeter relating $Y$ to $T_f$. Then, by monitoring magnet temperature and fluid temperature, the flowmeter sensitivity may be obtained for all operating temperature conditions.

The flowmeter output voltage $E$ can be interpreted in terms of flow $Q$ by multiplying $E$ by the sensitivity $Y/B_a$ obtained from the curves which correspond to the operating magnet temperature and fluid temperature. Nomographs may be made, based on $Y$ and $B_a$ curves, to go directly from $T_f$, $T_m$, and $E$ to flow $Q$. A nomograph of this type is shown in the Appendix. There is also a possibility of mechanizing this equation with some form of simple computing element for direct readout of $Q$ without recourse to graphs or nomographs.

## 2. ORNL MAGNETIC FLOWMETER TESTS

### 2.1 HISTORY

Ten 2-in. magnetic flowmeters and ten $3\frac{1}{2}$-in. magnetic flowmeters were tested and calibrated in test loops at ORNL. These loops were designed specifically for performance and endurance tests on pumps, but they were modified by an extension of each loop to include six magnetic flowmeters at a time for calibration and testing of the flowmeters concurrently with pump testing.

Initial inspection of the 24 magnetic flowmeters delivered from General Electric revealed that the air gap flux density, as well as the air gap to leakage flux density ratios, had changed since measurement at General Electric. These changes indicated that the air gap flux density might be subject to major changes during operation. The changes in air gap to leakage flux density ratio would indicate the possibility of a change in the relative configuration of air gap and leakage flux fields which would invalidate leakage flux density measurements in the determination of air gap flux density.

General Electric engineers visited ORNL and remeasured the air gap and leakage flux densities with a fluxmeter consisting of a light beam ballistic galvanometer as a voltage integrator with the calibration referred to a standard bar magnet flux linkage to a standard tapped coil. Their measurements agreed with the previous ORNL measurements to within better than 1% in the worst case. The six $3\frac{1}{2}$-in. search coils and the six 2-in. search coils were compared against each other in measuring one magnet. It was found that one of the three leakage flux coils for the 2-in. units gave a different reading for the same magnet. This was found to be due to the mounting bracket allowing this coil to be positioned differently in the nonuniform leakage flux field. Because of these apparent uncertainties, calibration under actual NaK loop conditions was undertaken to assure that the accuracy requirements were being met.

The pump test loop (PKP-2) in which six $3\frac{1}{2}$-in. units were installed was put into operation on February 12, 1957, and the pump test loop (PKA-2) in which six 2-in. magnetic flowmeters were installed was put into operation on May 23, 1957. Subsequently, four units of each type were removed and replaced by four uncalibrated units, making a total of 20 magnetic flowmeters which were tested and calibrated in the loops. The air gap flux density of the four units which were not operated was periodically checked for comparison as to stability with the units which were operated.

The $3\frac{1}{2}$-in. loop (PKP-2) was shut down on November 4, 1957, having operated 3138 hr, and the 2-in. loop (PKA-2) was shut down on November 5, 1957, having operated 2952 hr.

### 2.2 OBJECTIVES

The objectives of the tests were to

1. calibrate the 2- and $3\frac{1}{2}$-in. magnetic flowmeters against a water-calibrated venturi flow standard of 0.25% accuracy,
2. experimentally check the theoretical calculations of flow output and accuracy,
3. investigate the effects of temperature and handling,
4. determine the long-term reliability,
5. provide general operating data.

### 2.3 DESCRIPTION OF TEST CONDITIONS AND PROCEDURES

The test conditions were arranged to include varying ambient temperatures, fluid temperatures, magnet temperatures, and flow rates to observe their effect on flowmeter output voltage. These variables were monitored continuously by Brown potentiometer strip-chart recorders; flow was monitored on a Foxboro recorder and recorded on data sheets at approximately 2-hr intervals throughout the tests. Additional data were taken on controlled runs to observe the effect of each of the variables on flow output as indicated by the units. In addition to these measurements, the air gap flux density of each magnet was measured at frequent intervals to determine the effects of temperature, aging, vibration, and flow on the magnetic circuit and to determine the effect of air gap flux density on flow sensitivity. The air gap flux density measurements were taken during operation at magnet temperatures over the range from 77 to 600°F, and special runs were made to relate output directly to flux variations at extreme magnet temperatures. The values obtained were to relate output voltage and air gap flux density to magnet temperature, so that flux

measurement would not be necessary during actual operation.

### 2.3.1 Calibration Runs

Three types of calibration runs were made on the flowmeters: constant temperature runs, constant flow runs, and magnet air gap flux density runs.

For the constant temperature runs the fluid temperature was held constant and the flow rate was varied in 100-gpm steps from 600 to 1600 gpm for the $3\frac{1}{2}$-in. units and in 50-gpm steps from 200 to 600 gpm for the 2-in. units.

For the constant flow runs the flow rate was held constant and the fluid temperature was varied from 400 to 1500°F in 100°F steps. The constant flow runs were made for flows in 100-gpm steps from 600 to 1600 gpm on the $3\frac{1}{2}$-in. units and in 50-gpm steps from 200 to 600 gpm on the 2-in. units.

For the magnet air gap flux density measurements, each magnet was enclosed with the pipe by wrapping the entire magnet with insulating blankets of asbestos of double thickness, covered with spun glass insulation followed with a final covering of foil. The applicable flow data were recorded on data sheets as the magnets were heated by the flow pipe until a magnet temperature of 600 to 700°F was obtained. The blankets were then removed and the air gap flux density was measured and recorded with magnet temperature and flow data while the magnet was cooling to the ambient temperature of the loop enclosure.

### 2.3.2 Test Range

The tests covered or exceeded the range of the specifications of the units in most respects. The magnet temperature runs went to 600°F, while specifications call for 560°F. The fluid temperature range covered by the test was 400 to 1500°F, while the units were specified for 750 to 1600°F. The 2-in. units were tested over a flow range of 200 to 600 gpm, as against a specified range of 45 to 600 gpm, and the $3\frac{1}{2}$-in. units from 600 to 1600 gpm, as against a specified range of 45 to 1400 gpm. The lower flow ranges were not obtained by the test loops. The higher temperatures above 1500°F, which were approaching the safety limits of the loop, were to be tested after the pumps had passed their 3000-hr endurance test. Although the test was terminated before these tests were run, it is felt that the operating data can be safely extrapolated by 100°F to 1600°F in application.

## 2.4 DESCRIPTION OF TEST LOOPS

The $3\frac{1}{2}$-in. test loop consisted of a centrifugal pump driven by a 125-hp wound-rotor motor with a step-type resistance speed control, attaining speeds to 3500 rpm, and a piping loop consisting of 4- and $3\frac{1}{2}$-in. Inconel pipe. The 2-in. test loop consisted of a 50-hp motor of a similar type, attaining speeds to 3550 rpm, with a loop of 4- and 2-in. Inconel pipe. A diagrammatic representation of the $3\frac{1}{2}$-in. loop is given in Fig. 7.

### 2.4.1 Shielding

The entire loop was enclosed in heavy-gage construction steel, and the magnetic flowmeter section was shielded from the operating section of the loop to reduce the hazards as much as possible.

### 2.4.2 Filling Procedure

The NaK was introduced into the loop from two Calrod-heated sumps. The loop was kept under an inert helium atmosphere at all times. The loop was filled by using helium gas pressure on the sump to force the NaK up into the loop.

### 2.4.3 Temperature Control

The pump put sufficient power into the loop to heat the NaK to temperatures in the range of the calibration. These temperatures depended upon pump power and therefore were related to flow rates. Calrod heater banks totaling approximately 32 kw and blower air ducts were used to provide control over the fluid temperature. The entire loop piping and containers in contact with the fluid were covered with Fibrefrax thermal insulation.

### 2.4.4 Cold Trapping

The oxide level of the NaK was controlled by a water- and air-cooled cold trap (see Fig. 7). The cold trap was maintained at a lower temperature than any other point of the loop to allow any oxide which may have been present to precipitate out in the cold trap rather than elsewhere in the loop. The temperature was adjusted to the lowest value at which cold trap flow could be

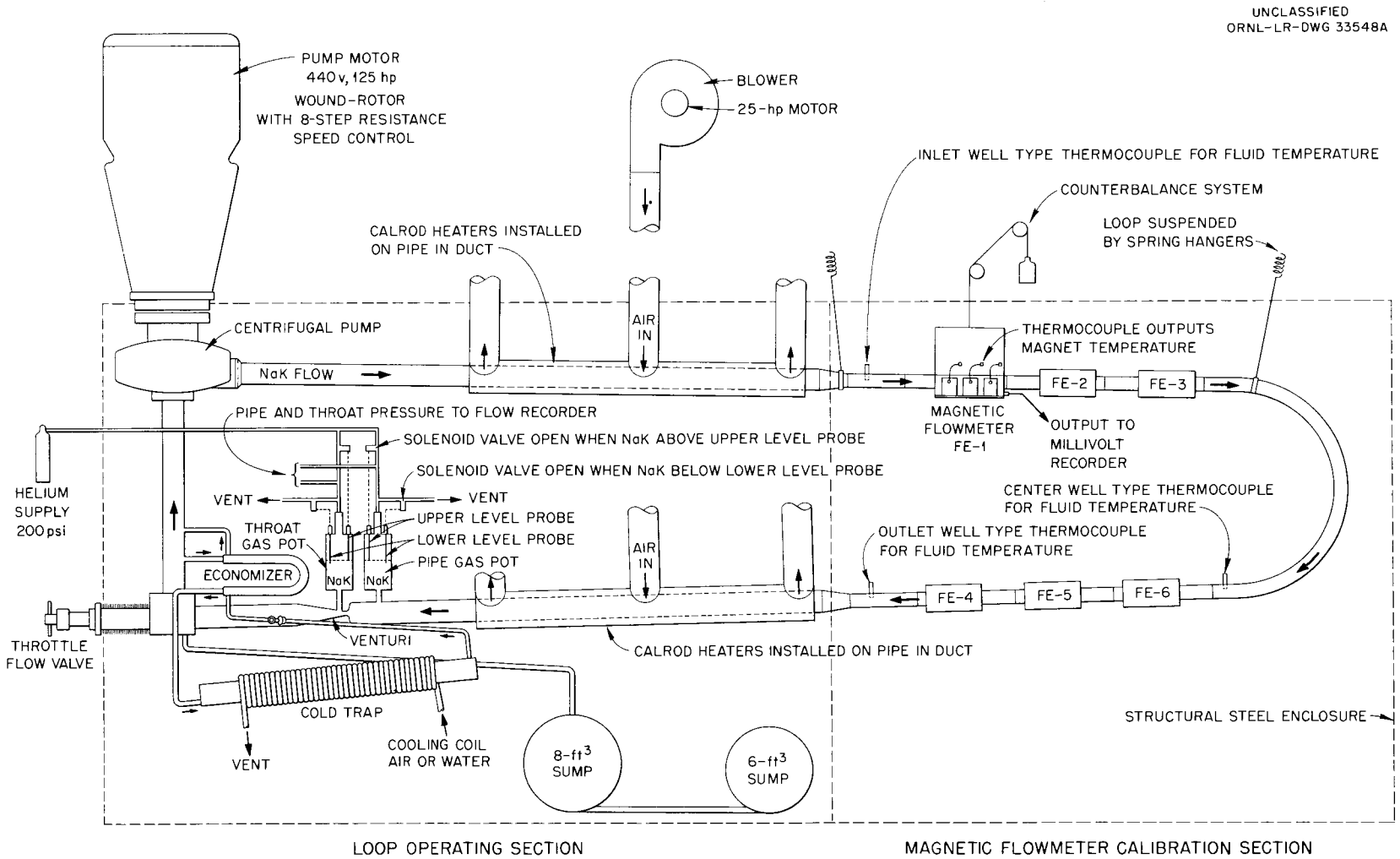


**Fig. 7. Diagram of $3\frac{1}{2}$-in. Pump Loop for Magnetic Flowmeter Calibration.**

maintained without plugging of inlet and outlet points. Since the cold trap temperature depended upon loop temperature, cold trap flow rate, and cooling rate, it was necessary to readjust conditions for each loop flow or fluid temperature change. The cold trap was maintained at 300 to 350°F after the initial cold trapping procedure indicated that the "break temperature" of the NaK in the loop was always below these temperatures. The break temperature is a measure of the oxide content of the loop in that it is the temperature at which the NaK is saturated by the amount of oxide in solution in the loop. A low break temperature indicates a low oxide concentration in the NaK.

### 2.4.5 Flow Control

The rough flow rate was controlled by regulating the pump speed in steps. A fine flow control was provided by a manually operated throttle valve.

### 2.4.6 Magnetic Flowmeter Calibration Section

The flow pipe section which comprised the magnetic flowmeter calibration section was supported by spring hangers. Six magnetic flowmeter units were installed end to end, with three units in the top section separated by a U-pipe section from three units in the bottom section (see Figs. 8 and 9). The units were individually counterbalanced from crossbeams by weights and hangers. Access was gained to the units through four doors in the shield, two lower and two upper. A ladder and a walkway across the loop enclosure on a level slightly lower than the flow pipe were constructed to provide access to the upper-level magnets for flux density measurements and maintenance. The walkway, hangers, crossbeams, and supports within 3 ft of the magnets were of nonmagnetic material. The interior of the enclosure was well lighted by four flood lamps for the safety of operating personnel. Persons entering the loop enclosure were required to wear full safety equipment (safety glasses, leather hoods, leather shoulder harness and gauntlets, leather apron, and gloves), and an additional man also in full safety equipment was stationed outside the loop for emergencies. A sound-powered phone provided communication between the instrument panel and the inside of the loop for flowmeter maintenance and flux measurements during operation. A loudspeaker communication system was provided between calibration instrument panel and loop operator.

### 2.4.7 Loop Measurements

The fluid temperature was determined by three well-type thermocouples inserted in the pipe. The thermocouples read calibration section inlet, middle, and outlet temperatures of the fluid.

The magnet temperatures were indicated by the three magnet thermocouples on each unit. In addition, thermocouples were attached to the top and bottom middle flowmeter magnets (FE-2 and FE-5) to determine the magnet temperature distribution.

Two thermocouples were suspended, one in the top level and one in the bottom level of the loop, in the vicinity of the flowmeter to read ambient temperature.

The three magnetic flowmeter signal voltage outputs were obtained from each flowmeter. All cabling and connectors were of high-temperature type.

The flow standard in each loop was a nozzle-type venturi tube, water-calibrated to ±0.25% accuracy. The venturi pipe and throat pressures were transferred from the NaK to the helium lines by the use of the gas pots as shown in Fig. 7, and were compared and read out as $\sqrt{\Delta p}$ by a Foxboro manometer. The flow standard arrangement is described in detail later.

### 2.4.8 Instrumentation

The magnetic flowmeter calibration section instrumentation is shown in Fig. 10. In the No. 1 and No. 2 racks from the left are six Brown Electronik potentiometer single-point 0–100 mv strip-chart recorders (0–60 mv for the 2-in. loop), one for each flowmeter. These instruments indicated and recorded the magnetic flowmeter flow output voltage. Since each flowmeter had three flow signal pickup elements, a Lewis switch was provided to select each of three flow outputs for the single-point recorders. The No. 3 output on each flowmeter was also available simultaneously on the Brown Electronik potentiometer dual-pen strip-chart recorder in the center of the No. 3 rack as selected by a Lewis switch. The second pen on this recorder indicated and recorded all magnet

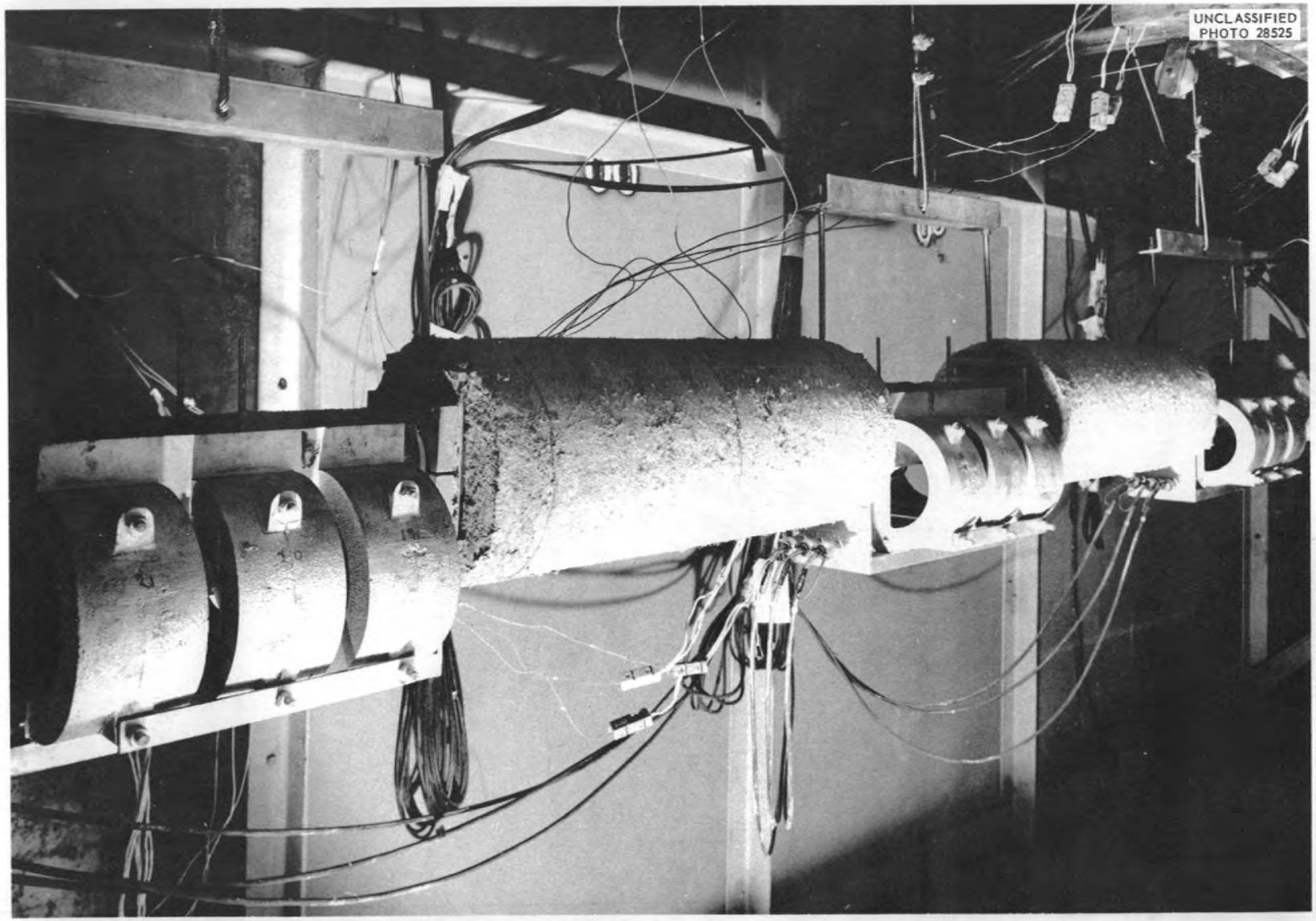


Fig. 8. Photograph of $3\frac{1}{2}$-in. Magnetic Flowmeters in PKP-2 Calibration Loop.

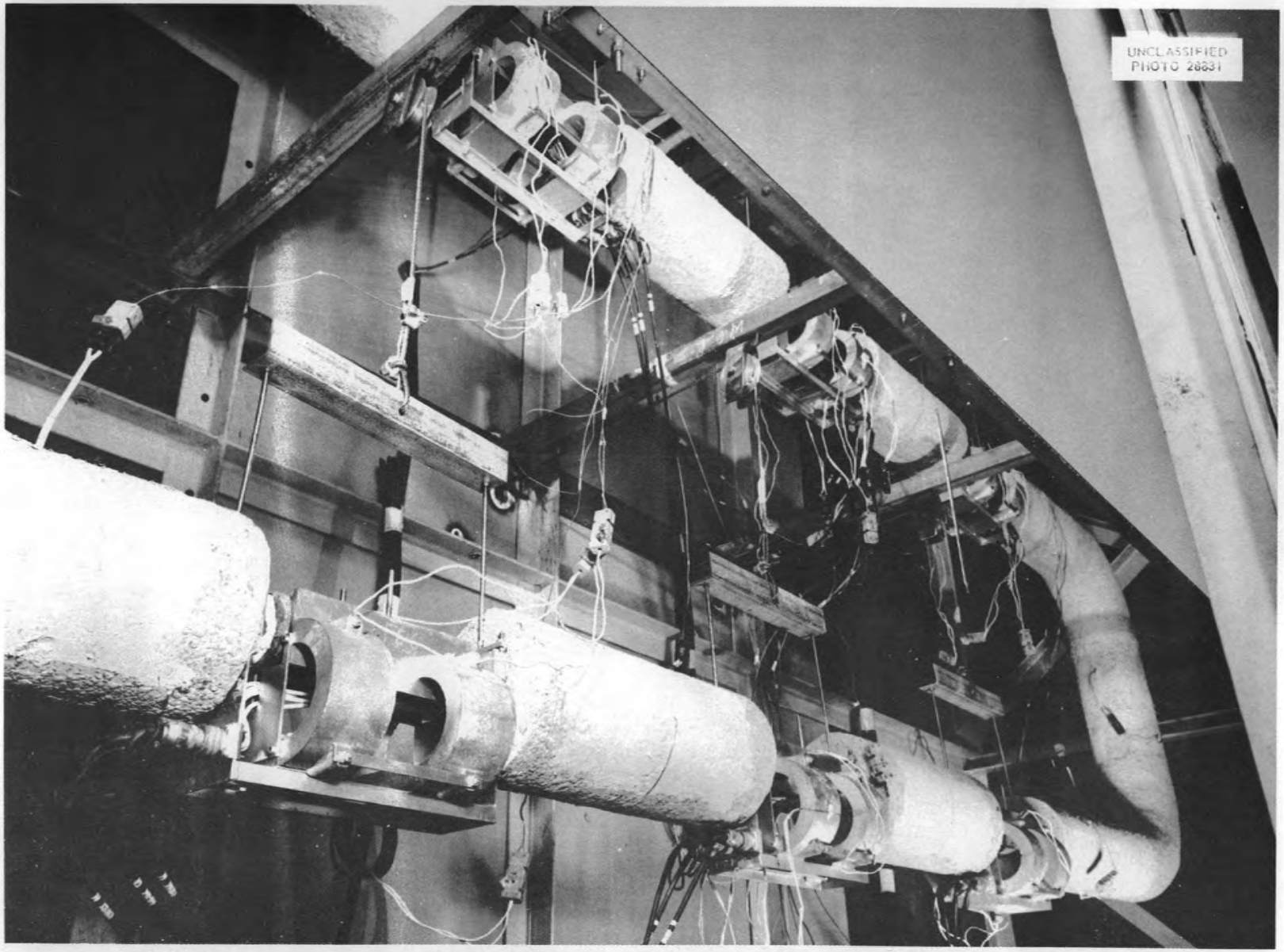


Fig. 9. Photograph of 2-in. Magnetic Flowmeters in PKA-2 Calibration Loop.

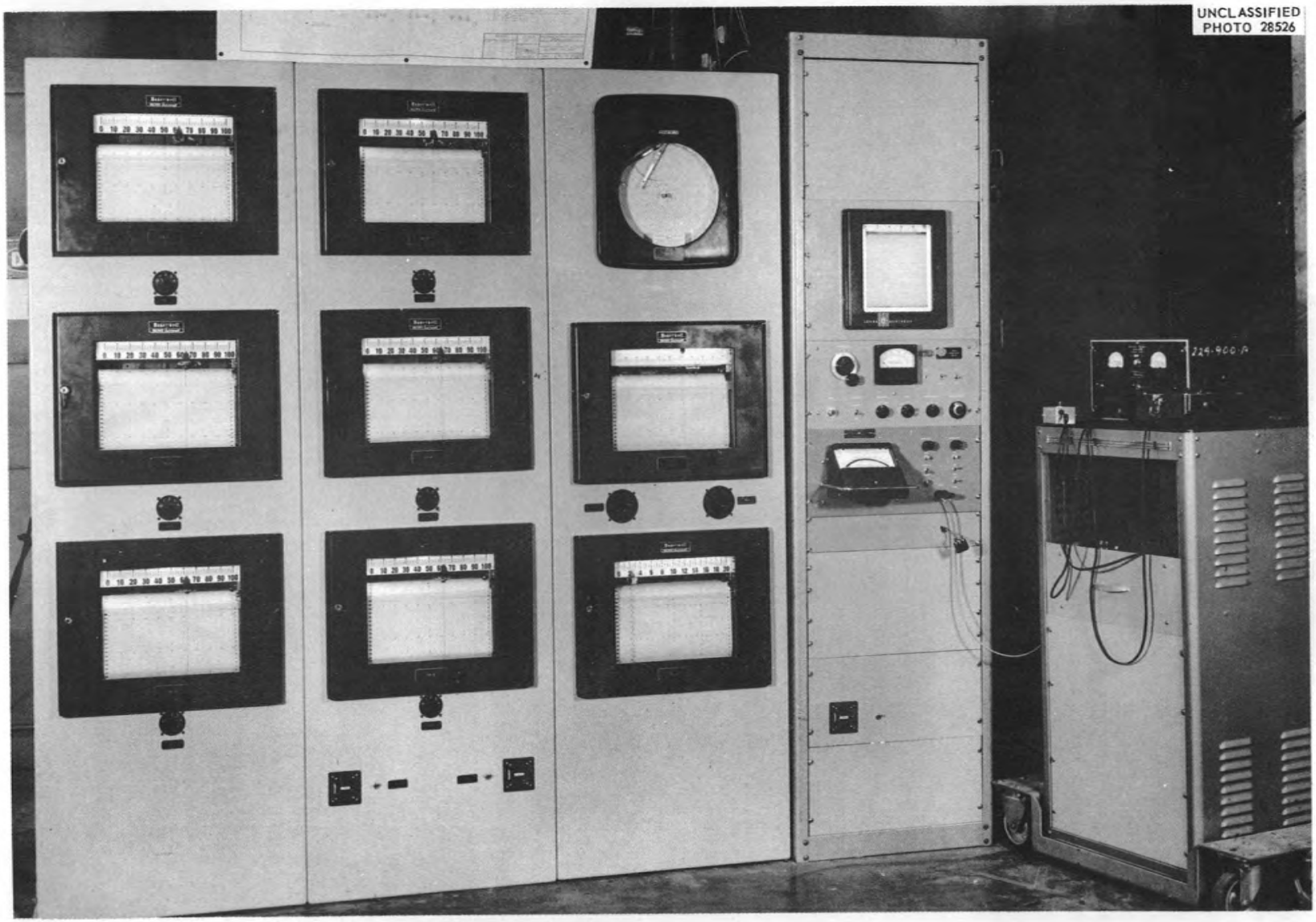


Fig. 10. Calibration Loop Instrumentation Panel.

temperatures, loop ambient temperatures, and the inlet, center, and outlet fluid temperature, as selected by a Lewis switch. These temperatures were also monitored continuously on the 16-point Brown Electronik potentiometer strip-chart recorder at the bottom of rack No. 3. At the top of rack No. 3 was the Foxboro square root differential pressure recorder, which accepted the venturi throat and pipe pressures from the gas pots and continuously recorded and indicated the square root of the differential pressure between the two inputs. The bottom instrument panel on rack No. 4 and the dolly to the right contained a Weston integrating fluxmeter and its flux standard, which was tied into the system so that periodic flux density readings of magnets in the loop could be indicated and recorded on one pen of the dual-pen recorder in the center of rack No. 3. The fluxmeter output was selected by the same Lewis switch that selected flowmeter outputs for this pen. The fluxmeter was used in conjunction with the search coils to measure magnet flux density on loop flowmeters and was also equipped with its own recorder to monitor magnet flux density on flowmeters that were not in the loop. The two top instruments in rack No. 4 were not used in this test. Timing indicators which were used to integrate operating time on the loop and on the flowmeters are shown at the bottom of panel No. 2.

#### 2.4.9 Synchronization of Recorded Output

All calibration instrumentation was equipped with a coded synchronizing time signal. This code, with a cycle of 6 hr, was recorded on all charts in order to relate simultaneous chart readings. The timer printed one mark every 5 min in the margin of the chart for the first hour of the cycle, two marks every 5 min for the second hour, and so on for the 6-hr cycle.

### 2.5 MEASUREMENT AND CONTROL OF CALIBRATION PARAMETERS

The calibration and test of the 2- and 3½-in. magnetic flowmeters on the PKA-2 and PKP-2 pump test loops were directed toward comparison of flow output indication with a flow standard. The indication of the instrument involved several parameters other than output voltage. It was necessary to measure these parameters or to keep them under rigid control in order to interpret the output indication of the magnetic flowmeter as flow and to compare it with the flow standard. The effect of each of these parameters affecting flow output was to be observed and compared with the predicted theoretical behavior. Careful consideration was given to the measurement of loop flow as well as to the measurement and control of the parameters affecting the magnetic flowmeter output and the flow standard.

The more important parameters used for measuring flow, magnetic flowmeter output voltage, magnet and fluid temperatures, and flux density and the methods for controlling flowmeter alignment and for determining NaK and Inconel physical constants are discussed in this section.

#### 2.5.1 Flow

As previously mentioned, the loop flow standard is a nozzle-type venturi tube. This tube was made by Builders-Providence, Inc., and was water-calibrated to ±0.25% accuracy by the manufacturer. Calibration curves are shown in Figs. 11 and 12 for the 3½- and 2-in. venturi tubes.

The use of the venturi as a flow standard for NaK was based on the water calibration to obtain the coefficient of discharge, and on flow calculations by H. J. Metz of the ORNL Instrument Department to convert to NaK use. These calculations were checked by the Foxboro Company and by Builders-Providence, Inc., and were approved as to correctness. Accuracy of the venturi-tube flow measurement depends upon the accuracy of the liquid metal physical data. The data involved are the density and viscosity of NaK over the temperature range of the experiment. These values

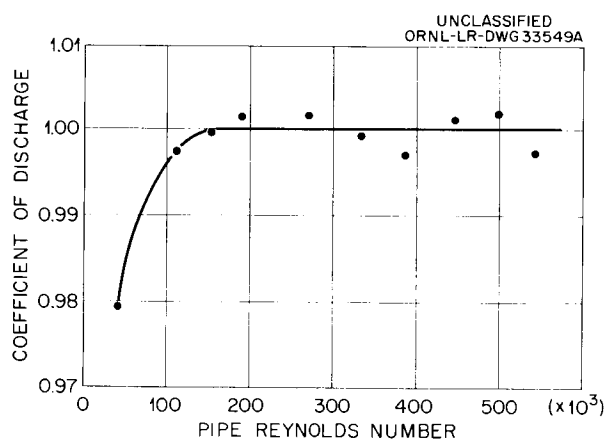


**Fig. 11. Water Calibration Curve for 3½-in. Venturi Tube.**

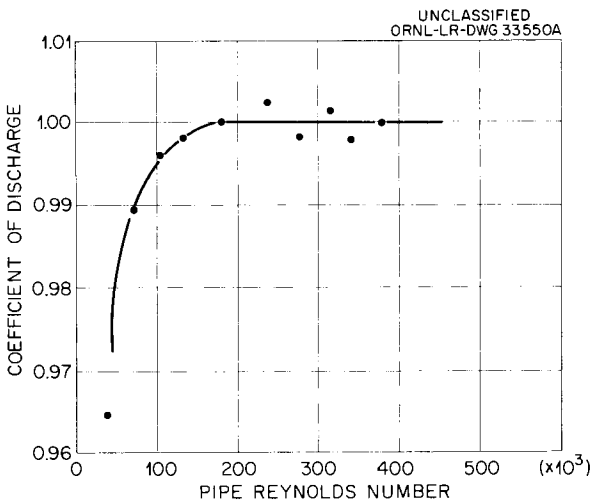


**Fig. 12. Water Calibration Curve for 2-in. Venturi Flow Tube.**

were obtained from other data (7), which referred to the *Liquid Metals Handbook* for density and viscosity values. The density of NaK was taken as 52.0 lb/ft$^3$ at 600°F, decreasing to 43.2 lb/ft$^3$ at 1600°F, and the viscosity of NaK as 0.26 centipoise at 600°F, decreasing to 0.16 centipoise at 1600°F.

The fluid temperature correction which was applied to flow output amounted to as much as 8% of the flow at 400°F for the temperature range of the experiment. Metz's calculations, listing venturi-tube constants, are included in the Appendix.

The venturi throat and pipe pressures were obtained from a helium gas pot arrangement. The throat and pipe NaK pressures were transferred to a differential pressure recorder as the helium gas pressures which were required to maintain the NaK at a constant level in throat and pipe gas pots. A diagram of the gas pot system is included in Fig. 7 (refer to ORNL Instrument Department Dwg. D-02-054-8044 R-2 and D-8043 for details). The NaK level was maintained in the gas pot between two resistance-type level indicator probes (ORNL Instrument Department Dwgs. Q-1716-135 and 136), which were separated by a space of 1 in. When the NaK pressure in the venturi throat was higher than the helium pressure in the gas pot, the NaK level rose in the pot until it contacted the upper level probe. The level indicator signal, operating through a relay system, actuated a solenoid valve to connect the 200-psi helium supply to the gas pot, driving the NaK down off the probe. Similar action bled the helium when the NaK went below the lower probe. Thus the NaK level was maintained in the 1-in. space between the upper and lower level probes, and the helium pressure required to maintain this NaK level represented the venturi-throat NaK pressure. The pipe pressure was obtained similarly.

These two helium pressures representing flow information were applied to a Foxboro model 28 mercury manometer differential pressure recorder with a special range tube to cover the particular differential pressure range concerned. A square root chart plasticized against dimensional change due to humidity was used to indicate and record the square root of differential pressure directly. The recorder was calibrated after installation with a mercury manometer to an accuracy better than ±0.1% of full scale and was subsequently calibrated several times during the experiment. One-hour circular charts were used so that transient flow variations could be read and would not obstruct accurate readings. The square root differential pressure readings, when multiplied by the proper factor corrected for fluid temperature, gave the loop flow.

The gas pots were designed so that the head differences due to differences in temperature and in level between the two and to the uncertainty in the NaK level between the two probes were negligible in terms of the pressures which were being measured.

A source of disturbance in the flow measurement in certain runs of the experiment, which appeared as an apparent nonlinearity of magnetic flowmeter output with flow, was traced to the pens on the Foxboro recorders becoming slightly bent because of the many chart changes which were made. This appeared as a fixed zero shift of 0.6% of full scale in differential pressure measurement. The runs involving this disturbance were used in calculations by applying the correction to the flow readings.

### 2.5.2 Voltage

The magnetic flowmeter output voltages were measured and recorded on Brown Electronik potentiometer 0–100 and 0–60 mv strip-chart recorders of the automatic standardization type rated at an accuracy of 0.25% of full scale. These recorders were calibrated immediately before startup and

were spot-checked at convenient intervals throughout operation. The calibration consisted of standardization against a Rubicon potentiometer at 10-mv intervals for 0–100 mv scales and at 5-mv intervals for 0–60 mv scales over the entire voltage ranges. The calibration was repeated at the end of the flowmeter calibration run. No correction was necessary as a result of the calibration at the end of the run except for one of the recorders on the 2-in. loop, which was found to have suffered a zero shift. Corrections were applied to the data on the 2-in. flowmeter involved to account for the zero shift. The units had a chart speed of 24 in./hr to allow observation of transients. This fast chart speed also minimized troubles which were encountered in keeping the pens inking at lower chart speeds. Ball-point pens were purchased, which improved the inking situation. The data were taken from the recorder scale, and the charts were used for backup data.

### 2.5.3 Temperature

The requirements for measurement of temperatures involved in the calibration are not as stringent as those for flow and voltage in that temperature changes do not affect the flow accuracy directly, but rather through air gap flux density changes and $Y$ factor changes. However, fair accuracy was desired in order to relate these variables as closely as possible to temperatures. As previously stated, magnet temperature was obtained by washer-type Chromel P–Alumel thermocouples bolted to the flowmeter magnets, and by thermocouples spotted to the surface of the magnet by Sauereisen cement. The fluid temperature was measured by sheath-type thermocouples inserted in wells in the pipe. The outputs of the thermocouples were indicated and recorded on 0–2000°F Brown Electronik potentiometer strip-chart recorders with automatic standardization. The recorders were calibrated before and after operation of the loop and several times throughout the run. The calibration was made against a Rubicon potentiometer and was checked every 200°F over the range of the recorder. The temperature measurements should be accurate to within ±10°F.

### 2.5.4 Magnetic Flux Density

A Weston model 1472 integrating fluxmeter was used for measuring air gap and leakage flux density throughout the tests. This fluxmeter is an electronic potential-time integrator. It was used with the search coils previously described. A flux linkage change in the coil as it is withdrawn from the field to be measured induces a potential. The fluxmeter accepts the generated potential, integrates it against time, and indicates the results in terms of flux linkage (maxwell-turns × 5000). Performance of this unit is governed by a suitable reduction of drift rate by adjustment in location. Drift is due mainly to parasitic thermal potentials in wiring, internal and external. This thermal drift and the amplifier gain drift can be controlled by adjustments on the fluxmeter panel. The instrument may be rezeroed to start an integration by a push-button on the panel. An extension of the rezeroing control was added to the instrument to make it possible to rezero remotely from inside the calibration loop when taking flux readings during loop operation. The accuracy of this instrument is stated to be 0.5% of the output current at any level.

The potential is integrated by feedback balancing the applied potential against a potential developed by a current change in a mutual inductor. The input relationship of the instrument is

$$E\,dt = IL \quad ,$$

and the equivalent of $E\,dt$ in terms of flux linkage is

$$\phi N = IL \times 10^5 \quad ,$$

where $E$ is the potential in millivolts, $t$ is time in seconds, $I$ is the current in milliamperes, $L$ is the inductance in henrys, $\phi$ is the flux in maxwells, and $N$ is the number of search coil turns. Since the fluxmeter reads $\phi N$, we may divide by $NA$, the calibration of the coil in turns times square centimeters, to obtain flux density $B$, since

$$B = \frac{\phi}{A} \quad .$$

The formula for obtaining flux density in gauss from fluxmeter reading (since the meter indicates in units of maxwell-turns × 5000) is

$$B = \frac{\phi N \times 5000}{(NA)} = \frac{\text{fluxmeter indication}}{\text{coil calibration constant}} \quad .$$

The over-all accuracy of flux density measurement for flowmeter use is determined by two factors: the accuracy with which the search coil was calibrated and positioned on the magnetic flowmeter and the accuracy of the fluxmeter potential-time integration.

The search coils were calibrated in a uniform field inside a toroidal coil supplied with a standard current. This was done by General Electric Company at their General Engineering Laboratory in Schenectady, New York. The positioning brackets were applied after the coil was calibrated. The bracket is important in that the flux density in the air gap is nonuniform. The measured flux density, which is used as the effective flux density for the flow equations, depends upon the positioning brackets to position the coil precisely and repeatably in the field. One of the coils was positioned by its bracket slightly differently from the others and measured a flux density 1% higher than the other two similar coils, although it had the same $NA$ calibration. This indicates that coil positioning is an important factor in measuring air gap flux by use of leakage flux.

The accuracy of the fluxmeter potential-time integration was referred to a potential-time integration standard. A capacitor standard was used to develop a known current-time integral when a reversing switch was thrown connecting the capacitor to a standard voltage. The current was passed through a standard resistance to develop a known potential-time integral for calibration. The relationship is

$$e\,dt = ECR \times 2 \times 10^{-3} \quad ,$$

where $e$ is the output potential in millivolts, $t$ is time in seconds, $E$ is the standard voltage in volts, $C$ is the capacity of the standard capacitor in microfarads, and $R$ is the resistance of the standard resistor in ohms.

The calibration circuit is shown in Fig. 13. The damping network is used to slow down the integration rate to allow the fluxmeter to follow, and has no effect on the accuracy of the calibration. From the equation, it can be seen that the standards are voltage $E$, capacitance $C$, and resistance $R$. The capacitor was a General Radio decade capacitor rated 1% accuracy which was double-checked on a General Radio bridge of 1% accuracy and found to have the nominal value of capacitance (1.000 $\mu$f). The resistor standard was a 1-w Daven type 1143 (2.5 ohms ± 0.5%) which was selected by use of a Wheatstone bridge as having the nominal value of resistance. The voltage standard was a 0.5% accuracy Weston d-c voltmeter model 622. The fluxmeter was calibrated before each set of flux readings directly against the standard circuit. The standard produced a step potential-time integral corresponding to a certain value of flux linkage. The size of the standard step could be adjusted by adjusting the voltage from the power supply. The switch was stepped over the full scale; the recorder was adjusted by a range-expansion potentiometer to read correctly in the vicinity of the expected flux reading, and the drift was adjusted to optimum in this vicinity. The measurements made by the fluxmeter using this standard were compared with independent measurements made by General Electric with the light beam ballistic galvanometer and were found to agree to within 1% in the worst case.

### 2.5.5 Flowmeter Alignment

The importance of maintaining signal electrode to field geometry was discussed previously. Basing the physical alignment of the flowmeters upon the ink marks and scribe marks used in initial assembly was found to be unreliable. The insulation was cut and folded back to expose the signal electrodes, and accurate measurements were made to position them in the exact center of the air gap and to align them at right angles to the field. This alignment was checked immediately before operation of the units for calibration and was rechecked upon completion of the tests. The insulation was replaced over the electrodes during operation of the units.

### 2.5.6 NaK and Inconel Physical Constants

The NaK and Inconel physical constants may affect the calibration accuracy in several ways. The density and viscosity of the NaK are used in interpreting the output of the venturi flow standard. The resistivities of the NaK and the Inconel pipe are used in the theoretical calculation of flowmeter output. Also, the thermal coefficient of expansion of the Inconel affects the fluid temperature correction for the magnetic flowmeter slightly. The amount of oxide present in the NaK should also be known, because oxide in large quantities may affect the physical constants of the NaK or may precipitate out on the inner walls of the pipe, affecting accuracy, particularly at low fluid temperatures. The oxide level may build up in a system with time or may increase when the loop is opened. It is felt that the cold trapping system as described earlier should have kept the oxide in the loop to a low level.

UNCLASSIFIED
ORNL-LR-DWG 33551

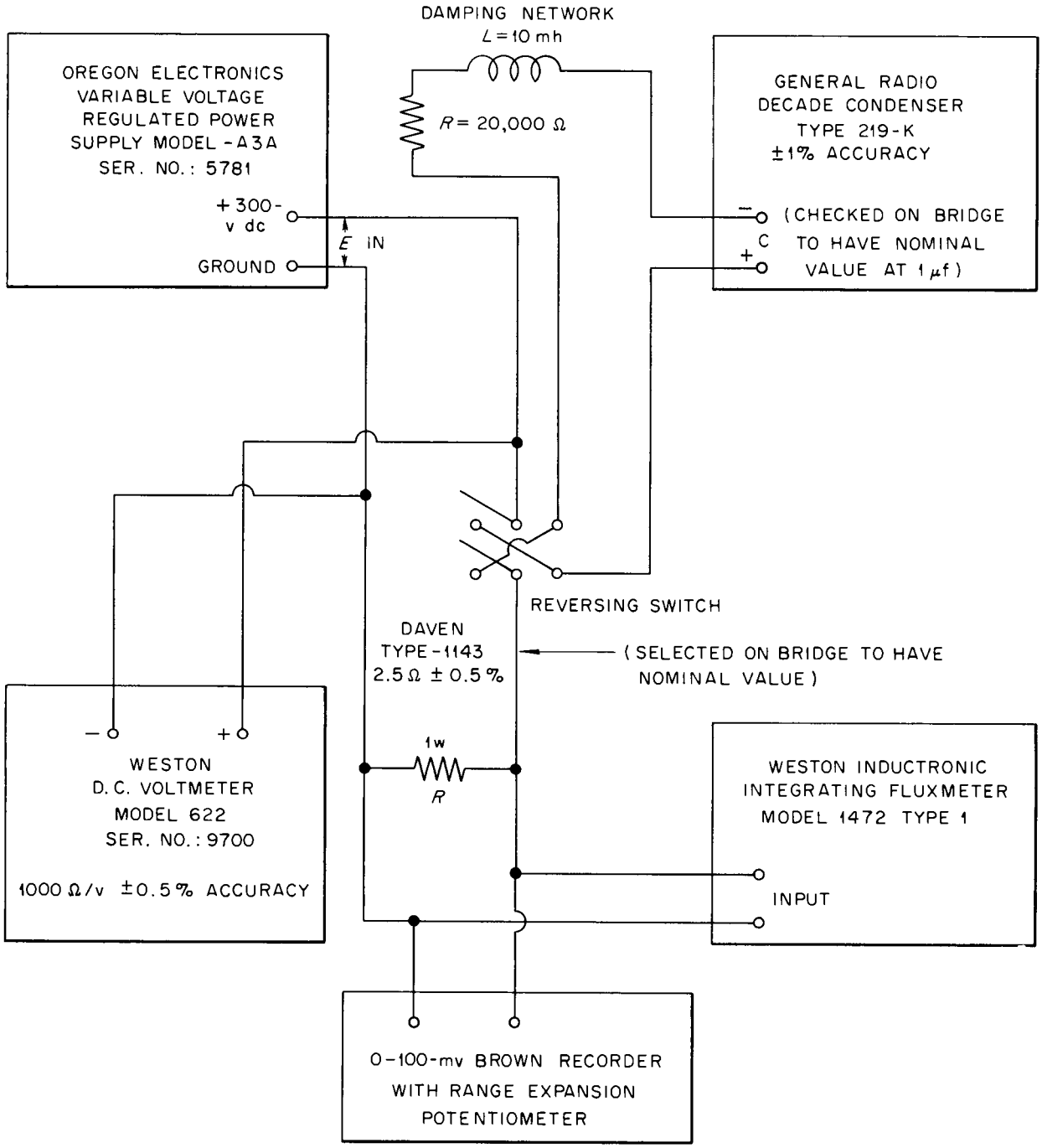


**Fig. 13. Calibration Circuit.**

There is some uncertainty connected with the resistivity values used in the theoretical calculations of magnetic flowmeter output. Figures 14 and 15 show the curves for the resistivity of Inconel and NaK plotted vs temperature which were used in the theoretical calculations. Samples of the NaK that was used in the PKP-2 loop were retained for analysis as to resistivity, but the experiment was terminated before the analysis was completed. Preliminary measurements made of the resistivity values for the NaK samples indicated the resistivity at 1500°F to be 6% higher than the value used in theoretical calculations. These preliminary measurements have an accuracy range of no better than ±5% and so are inconclusive. However, there is also an uncertainty in the theoretical values used. A more recent determination of Inconel resistivity is shown in Fig. 16. Comparison of Figs. 14 and 16 shows that there is again an uncertainty in this value, which may approach 10%. (See the Appendix for a discussion of Inconel resistivity behavior.)

The thermal coefficients of expansion of Inconel over the temperature range, as well as the density and viscosity of NaK, were taken from other data (7).

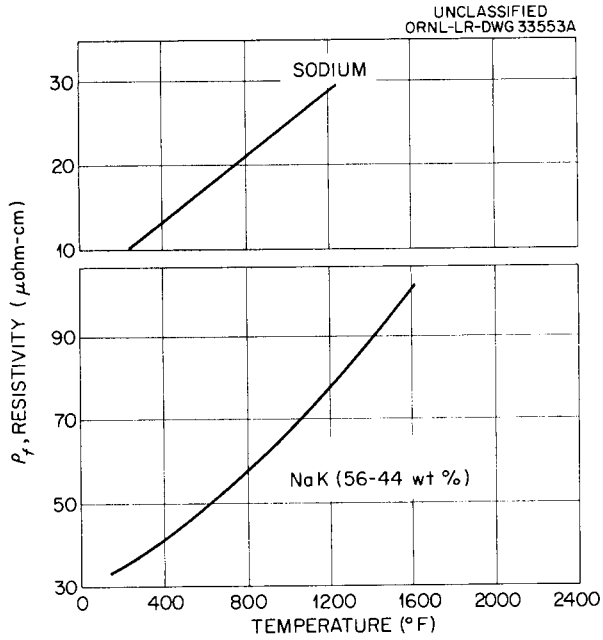


**Fig. 15. Resistivity of NaK vs Temperature.**

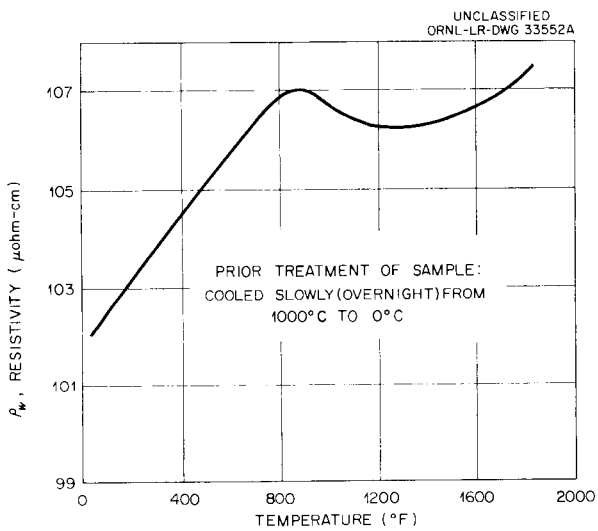


**Fig. 14. Resistivity of Inconel vs Temperature.**

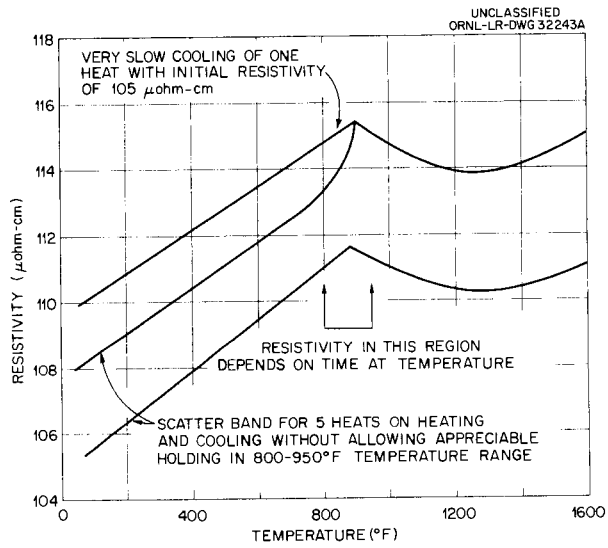


**Fig. 16. Resistivity of Inconel (Five Heats) vs Temperature.**

# 3. MAGNETIC FLOWMETER TEST AND CALIBRATION RESULTS

## 3.1 GENERAL TEST RESULTS AND OPERATING NOTES

Calibration tests were run on two lots of each size of flowmeter (2 and $3\frac{1}{2}$ in.). The magnetic flowmeters in lot No. 1 of each size were designated for reference as FE-1 through FE-6, with the numbers increasing with flowmeter position in the loop in the direction of flow (see Fig. 7). For lot No. 2, four flowmeters were removed from the loop and replaced by four uncalibrated flowmeters. The flowmeters occupying positions FE-1 and FE-2 were left in the loop for continued long-term testing and to provide a reference back to the data for lot No. 1. The flowmeters in lot No. 2 were designated FE-1A through FE-6A.

### 3.1.1 Accrued Operating Time

The loop tests were terminated on November 5, 1957, and the flowmeters were subsequently removed from the loop, cleaned, and crated for storage after terminal flux density measurements were made.

The total operating time accrued on the units was as follows:

**2-in. Magnetic Flowmeters**

| | |
|---|---|
| 4 units | 1038 hr |
| 4 units | 1916 hr |
| 2 units | 2953 hr |

**$3\frac{1}{2}$-in. Magnetic Flowmeters**

| | |
|---|---|
| 4 units | 770 hr |
| 4 units | 2368 hr |
| 2 units | 3138 hr |

The total elapsed time for the two $3\frac{1}{2}$-in. reference units in the loop was ten months, and for the two 2-in. reference units it was seven months. There was no obvious deterioration in performance of the flowmeters during the operating periods.

Some general operating characteristics of the units as observed from the tests are discussed in the rest of Sec 3.1.

### 3.1.2 Agreement of the Three Output Elements

The three flowmeter output elements gave the same output flow indication, as closely as could be read from the Brown recorder. This was true for both the 2- and $3\frac{1}{2}$-in. units.

### 3.1.3 Use of Separate Recorders

Three separate recorders may be connected to the three flow elements without interaction. In fact, satisfactory operation was obtained by connecting two recorders to the same flow element. This was made possible by the low source impedance of the flowmeter element, which was that of the Inconel pipe section containing the flowing NaK.

### 3.1.4 Noise

As had been anticipated, noise pickup proved to be no problem, since the impedance of the flow element was low. There was a small low-frequency variation in the signal, of the order of several cycles per second, probably due to loop vibration.

### 3.1.5 Transient Response

The speed of response of the magnetic flowmeter system was limited by the speed of response of the Brown recorder used. The flowmeter followed minute variations of flow faithfully and responded well to abrupt changes of flow.

### 3.1.6 Shorting of Output Leads

Some trouble was encountered throughout the test with shorting of the voltage output leads together and against the magnetic flowmeter frame. The ceramic-bead-insulated leads were drawn too tightly, and there was enough play in the beads, to allow shorting. In future designs the leads should be separated by ceramic spacers and allowed more slack.

### 3.1.7 Flux Coil Holder

The flux coil holder studs on the $3\frac{1}{2}$-in. flowmeters were not entirely satisfactory. The positioning holes in the test coil bracket were not exactly lined up with the studs, so that some effort was required to put the coil in place for flux measurement. New fixtures were designed and installed on lot No. 2 of $3\frac{1}{2}$-in. flowmeters and on one search coil, which allowed flux measurements during operation with greater ease (see ORNL Instrument Department Dwg. Q-1718-27). The

original bracket design should be satisfactory if greater care is taken in alignment.

### 3.1.8 Movement of Signal Electrode

The magnetic flowmeter voltage elements moved in the direction of flow from the center of the pole pieces by 1 in. in two cases on the $3\frac{1}{2}$-in. units. This may have occurred upon removal of the flowmeter from the loop. No effect on output was observed due to this movement.

### 3.1.9 Magnet Thermal Insulation

The magnet appeared to be well insulated from the pipe. The highest magnet temperature attained in normal operation of the loop was 305°F with an ambient of 180°F and a fluid temperature of 1500°F. Ambient temperature of the loop enclosure was a prime factor in magnet temperature. The magnets in the upper loop level ran hotter than those in the lower level due to higher ambient temperature in the upper loop level.

The 125°F temperature rise over ambient was the highest recorded in the magnets, even though the fluid temperature was as high as 1500°F.

### 3.1.10 Thermal EMF's

Thermal emf's are usually present in the output signal. These emf's are caused by heating the junction of two dissimilar metals. The amount of emf produced depends upon the degree of dissimilarity between the metals and the amount of heat applied at the junction. In the case of magnetic flowmeters this emf is produced at the junction of the signal lead and the flow pipe, since the electrodes and the pipe material to which they are attached are rarely the same. Therefore, a thermal emf is produced. However, in checking the flowmeters under test, no thermal emf's were detected which were of sufficient magnitude to be read on the flow recorder. A microvolt potentiometer was used for measuring the thermal emf's, and even then the values found were very small, usually below 20 $\mu$v.

### 3.1.11 Indication of Low Flow Rates

In testing for thermal emf's with loop flow shut down and heat applied through the Calrod heaters, convection currents in the NaK were indicated on the magnetic flowmeters, showing that the flowmeters are capable of indicating flow rates close to zero.

### 3.1.12 Compression of Magnet Assembly Insulating Spacers

During operation of the loop the insulating spacers consisting of stainless steel shim stock and wire mesh became compressed due to thermal cycling and allowed the magnet assembly to loosen on the pipe. This did not appear to influence calibration, since the installation was fixed and the magnets were suspended with their center of gravity under the point of support. In other types of installation, loosening of the magnet assembly on the pipe could result in twisting or slippage. Some modification of the clamping arrangement should be made to correct this situation.

### 3.1.13 High-Temperature Connectors

The high-temperature connectors as installed on the flowmeter were satisfactory for the temperatures attained in the loop. The connectors were an American Phenolic type good to 600°F. No failure was recorded in any of the connectors. The flowmeter output connectors were well isolated from the pipe and did not attain temperatures much higher than loop ambient temperature.

### 3.1.14 Fluid and Magnet Temperature Effects on Output

Detailed test results in connection with these effects are given in the sections which follow. Figures 17–19 summarize these effects for $3\frac{1}{2}$-in. magnetic flowmeter FE-3 in graphical form. Figure 19 compares the experimental value of the $Y$ factor for FE-3 with the theoretical value as derived from Eq. (11). Of the $3\frac{1}{2}$-in. flowmeters, FE-3 showed the greatest difference between the experimental and theoretical $Y$ factors.

## 3.2 MAGNETIC FLUX DENSITY EFFECTS

The establishment of correct magnet air gap flux density values over the operating magnet temperature range of the units was a major factor in the calibration. The consideration of long-term flux stability is also important.

From a look at the operating equation, Eq. (12), it may be seen that flow sensitivity depends directly upon the air gap flux density. Any reading of flowmeter output voltage must be interpreted in terms of the air gap flux density at the time of the reading. It may be seen that for small percentage errors in flux determination the same percentage errors will occur in flow output.

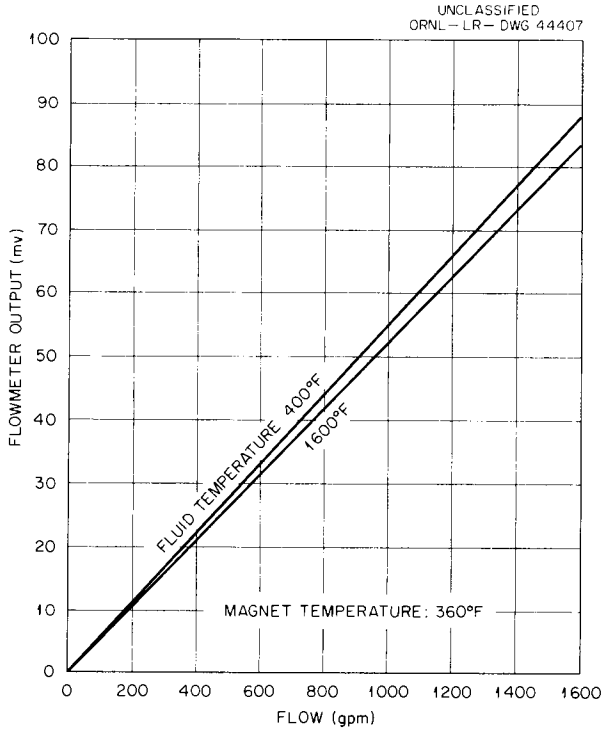


**Fig. 17. Output of $3\frac{1}{2}$-in. Magnetic Flowmeter FE-3 vs Flow.**

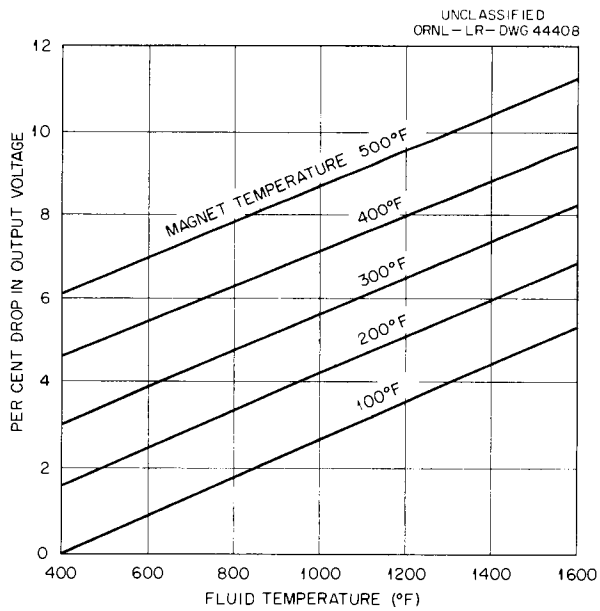


**Fig. 18. Percentage Drop in Output with Magnet Temperature and Fluid Temperature Change for $3\frac{1}{2}$-in. Magnetic Flowmeter FE-3.**

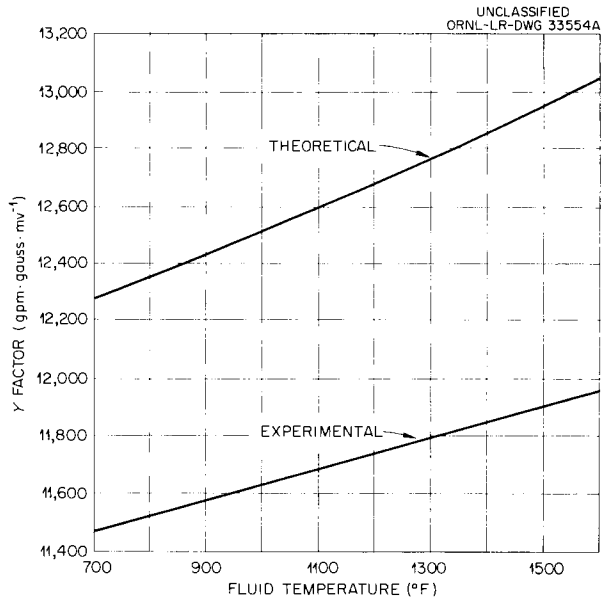


**Fig. 19. *Y* Factor vs Fluid Temperature, Theoretical and Experimental, for $3\frac{1}{2}$-in. Magnetic Flowmeter FE-3.**

### 3.2.1 Air Gap Flux Density vs Magnet Temperature

General Electric supplied curves of flux density vs magnet temperature covering magnet temperatures up to 800°F as obtained before shipment of flowmeters to ORNL. Since the flux density of the units dropped during shipment and during the period leading up to installation, the curves were repeated at ORNL and are shown in Fig. 20 for the $3\frac{1}{2}$-in. flowmeters and in Fig. 21 for the 2-in. flowmeters (see also Tables 3 and 4). These curves were obtained from measurements of leakage flux density made after installation of the magnetic flowmeters in the loops. The air gap to fringe flux ratios as determined at ORNL were applied to these leakage flux measurements to convert to air gap flux density. The major portion of the flux data between room temperature and 250°F were taken while the flowmeters were in normal operation in the loop.

In addition to the data obtained during normal operation the curves were extended to 600°F by data obtained from the magnet temperature runs. As previously described, for these runs the flowmeters were enclosed with the pipe and allowed to heat from 600 to 700°F; then the wrapping was

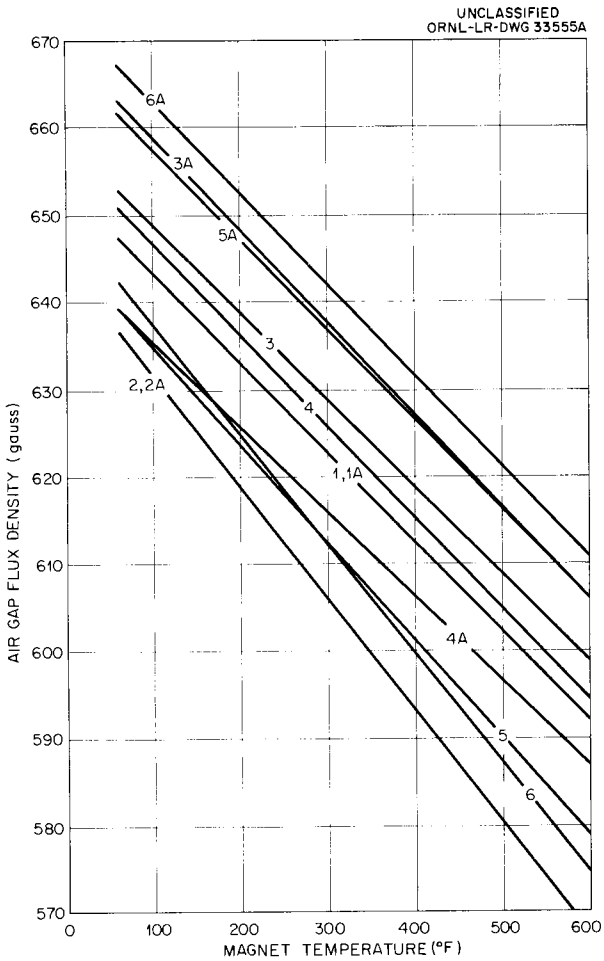


Fig. 20. Air Gap Flux Density vs Magnet Temperature (ORNL Calibration) for $3\frac{1}{2}$-in. Magnetic Flowmeters.

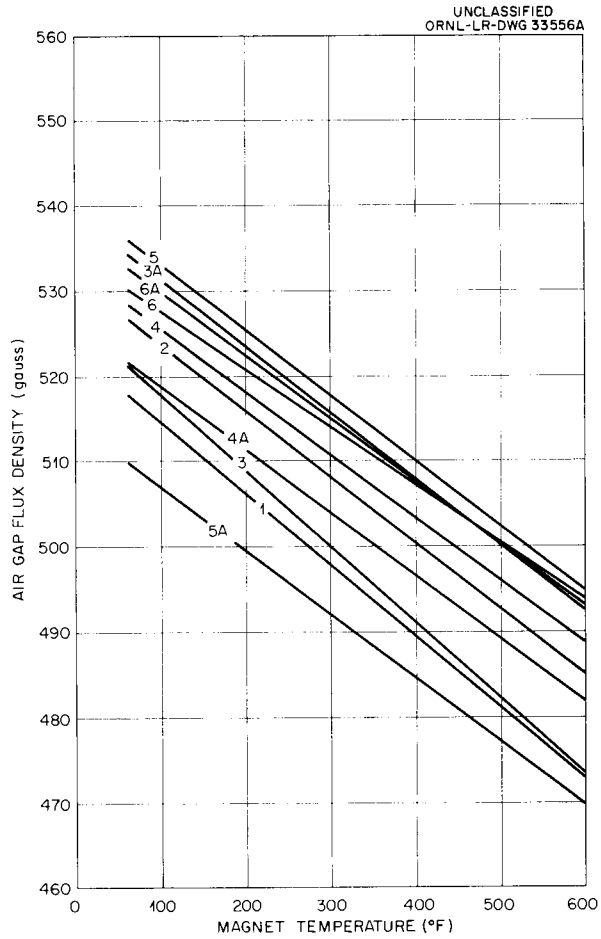


Fig. 21. Air Gap Flux Density vs Magnet Temperature (ORNL Calibration) for 2-in. Magnetic Flowmeters.

removed, and the flux density and the magnet temperature were recorded during cooling. The best straight-line graph, as shown in Figs. 20 and 21, was drawn through the points obtained. The graphs were based on 50 to 360 flux readings over the magnet temperature range. The mean deviation of the points from the graphs was less than 0.6% in the worst case.

During operation no change in the measured room-temperature flux density was detected. The room-temperature measurements were repeated after the flowmeters were removed from the loop and, in some cases, cleaned and rechamfered for welding; the results agreed with the initial measurements made upon installation.

### 3.2.2 Flux Density Stability Data for $3\frac{1}{2}$-in. Magnetic Flowmeters

The air gap flux density history for the $3\frac{1}{2}$-in. units is given in Table 1. The initial flux density was measured at General Electric prior to September 1956. The room-temperature (80°F) value of magnet air gap flux density, as obtained from curves supplied by General Electric relating air gap flux density to magnet temperature for each unit, is given in column 3. The initial flux density values for the 12 units varied between units from 671 to 700 gauss, a spread of 29 gauss.

The flux density was remeasured (October and November 1956) by ORNL and General Electric,

**Table 1. Air Gap Flux Density History for 3½-in. Magnetic Flowmeters (Room Temperature Values)**

| Loop Flow Element Number | G. E. Flowmeter Serial Number | G. E. Flux Prior to Shipment to ORNL 9/56 (gauss) | ORNL Flux Upon Receipt of Units 10/56 (gauss) | G. E. Flux Remeasured at ORNL 11/56 (gauss) | Flux Drop in Shipment 9/56–11/56 (gauss) | Flux Drop in Shipment 9/56–11/56 (%) | ORNL Flux After Installing Units 2/57–12/57 (gauss) | Flux Drop at ORNL 10/56–12/57 (gauss) | Flux Drop at ORNL 10/56–12/57 (%) | Flux Drop Since at G. E. 9/56–12/57 (gauss) | Flux Drop Since at G. E. 9/56–12/57 (%) | Deviation from Mean Flux Drop (%) |
|---|---|---|---|---|---|---|---|---|---|---|---|---|
| FE-1 | 4896685 | 682 | 646 | | 36 | 5.3 | 645 | 1 | 0.2 | 37 | 5.4 | –0.1 |
| 2 | 4896682 | 671 | 638 | | 33 | 4.9 | 634 | 4 | 0.6 | 37 | 5.5 | 0 |
| 3 | 4896681 | 687 | 671 | | 16 | 2.3 | 651 | 20 | 3.1 | 36 | 5.2 | –0.3 |
| 4 | 4896680 | 689 | 664 | | 25 | 3.6 | 649 | 15 | 2.3 | 40 | 5.8 | 0.3 |
| 5 | 4896684 | 667 | 652 | | 15 | 2.2 | 637 | 15 | 2.3 | 30 | 4.5 | –1.0 |
| 6 | 4896688 | 682 | 660 | | 22 | 3.2 | 640 | 20 | 3.0 | 42 | 6.2 | 0.7 |
| 3A | 4896686 | 698 | | 674 | 24 | 3.4 | 661 | 13 | 1.9 | 37 | 5.3 | –0.2 |
| 4A | 4896677 | 678 | | 655 | 23 | 3.4 | 637 | 18 | 2.7 | 41 | 6.0 | 0.5 |
| 5A | 4896687 | 692 | | 674 | 18 | 2.6 | 660 | 14 | 2.1 | 32 | 4.6 | –0.9 |
| 6A | 4896679 | 700 | | 678 | 22 | 3.2 | 665 | 13 | 1.9 | 35 | 5.0 | –0.5 |
| * | 4896678 | 684 | | 654 | 30 | 4.4 | 648 | 16 | 2.4 | 46 | 6.7 | 1.2 |
| * | 4896683 | 684 | 671 | 672 | 12 | 1.8 | | | | | | |
| | | | | | | | | | | | Av 5.5 | Av 0.5 |

*Not operated.

and the values obtained are given in columns 4 and 5. These flux density values were obtained after shipment from General Electric and varied between units from 638 to 678 gauss, a spread of 40 gauss. The drop in flux density from the initial value prior to shipment (column 6) ranged from 12 to 36 gauss, representing a drop from the initial flux density of from 1.8 to 5.3% (column 7).

The flux density values of ten of the units were re-established by ORNL in the period February to December 1957 after installation in the test loop. The room-temperature values after installation in the loop are those indicated by the graphs of Fig. 20. This value of flux density remained valid throughout operation of the loop. The magnet measurements indicated no change in room-temperature air gap flux density during the period of operation and removal from the loop with subsequent cleaning and chamfering of the pipe for welding. The two reference units remained in the loop ten months and were operated for 3138 hr. The room-temperature flux density values after installation as taken from these graphs are tabulated (column 8) along with the value for another flowmeter measured during this period, which was not installed. These values ranged from 634 to 665 gauss, a spread of 31 gauss.

The drop in flux density for 11 flowmeters during the period of approximately 14 months at ORNL ranged from 1 to 20 gauss, representing a drop at ORNL of from 0.2 to 3.1%. This drop occurred during the early months at ORNL leading up to installation in the loops. During this period the flowmeters, with the exception of flowmeter SN-4896678, were handled extensively and were welded into the loop.

The total drop in flux density during the period of at least 15 months since the initial measurement at General Electric ranged from 30 to 46 gauss. This represents a drop from the initial flux density on the 11 units of from 4.5 to 6.7%. The mean drop on the 11 units was 5.5%. The mean deviation from the value 5.5% on the 11 units was only 0.5%, indicating that the drop was close to the same value for all the units.

It is to be noted that the greatest percentage drop in flux density occurred in flowmeter SN-4896678, which was not installed in the loop and therefore not subjected to the handling and welding procedure involved in the installation of the other flowmeters.

The drop in flux density cannot be traced directly to any particular instance of rough handling, nor can it be described as a continuous drop with time, but instead it occurred in a somewhat erratic manner. It may be noted (columns 7 and 12) that in two instances almost the entire drop occurred before the flowmeters arrived at ORNL, while in other cases less than half the total drop occurred during this period. It may be significant that the entire drop, which amounted to nearly the same percentage value for each magnet, occurred in an erratic fashion within a few months after magnetization, part of the drop occurring during shipment and the remainder at ORNL, with no apparent direct relation to either handling or time. Some of the flowmeters were disassembled for direct air gap measurement and then reassembled. No change in flux density was noted in any case due to disassembly of the units. These observations may indicate an initial instability in the magnets; after a time the flux drops to a certain more stable level for each magnet. The magnet then appears stable, as evidenced by the fact that the operating period and removal from the loop with subsequent cleaning and preparation for welding produced no change in flux density. The indication from the data is that the stable value for these particular units was approximately 5.5% below the value after the procedure that General Electric used in stabilization. The fact that the loss is close to 5%, which is the amount of demagnetization generally considered necessary for stability, may indicate that the magnets possibly had been left in the relatively unstable magnetically saturated condition and that the losses which were noted were connected with attaining the 5% demagnetized condition. If this is not the case, the indication is that the stable point might be attained by demagnetizing the magnets to approximately 10% below the saturation value or by aging the flowmeters for a period of several months while perhaps subjecting them to mechanical shock.

It is suggested that observation and flux measurements on the units that are in storage be continued over a period of time to determine whether further flux density changes occur in addition to the 5.5% drop already observed.

The temperature cycling at ORNL produced no irreversible change in measured flux density. The cases in which the temperature cycle to 600°F was repeated more than once in the magnet temperature runs produced reproducible flux curves. All

the magnets were temperature-cycled extensively from 100 to 300°F during normal operation, with no apparent irreversible flux changes.

### 3.2.3 Flux Density Stability Data for 2-in. Magnetic Flowmeters

The air gap flux density history for the 2-in. units is given in Table 2. The initial flux density was measured at General Electric prior to September 1956. The room-temperature (80°F) value of magnet air gap flux density, as obtained from curves supplied by General Electric relating air gap flux density to magnet temperature for each unit, is given in column 3. The initial flux density value for 11 units varied from 521 to 555 gauss, a spread of 34 gauss, excluding FE-6 (measuring 561 gauss) which was subsequently found to have a cracked magnet.

The flux density was remeasured at ORNL (October and November 1956) by ORNL and General Electric, and the values obtained are given in columns 4 and 5. These flux density values were obtained after shipment from General Electric and varied from 514 to 551 gauss, a spread of 37 gauss. The drop in flux density from the initial value prior to shipment ranged from 0 to 11 gauss (column 6), excluding FE-6, which showed an apparent drop of 23 gauss. These drops represent a drop from the initial flux density of from 0 to 2.1%, except for FE-6 with an apparent drop of 4.1% (column 7).

The flux density values of ten of the units were re-established by ORNL in the period (May to December 1957) after installation in the loop. The room-temperature values after installation in the loop are those indicated by the graphs of Fig. 21. This value of flux density remained valid throughout operation of the loop. The magnet measurements indicated no change in room-temperature air gap flux density during the period of operation and removal from the loop and subsequent cleaning and chamfering of the pipe for welding. The two reference units remained in the loop for seven months and were operated for 2953 hr. The room-temperature flux density values after installation as taken from these graphs are tabulated (column 8) along with the value for another flowmeter measured during this period, which was not installed. These values ranged from 509 to 535 gauss, a spread of 26 gauss.

The drop in flux density for 11 flowmeters during the period of approximately 14 months at ORNL ranged from 1 to 11 gauss (column 9), representing a drop of from 0.2 to 2.0% (column 10). This drop occurred during the early months at ORNL leading up to the installation in the loops. During this period the flowmeters, with the exception of flowmeter SN-4896698, were handled quite extensively and were welded into the loop.

The total drop in flux density during the period of at least 15 months since the initial measurement at General Electric ranged from 5 to 14 gauss (column 11), excluding FE-6 with a drop of 32 gauss. This represents a drop from the initial flux density on ten units of from 0.9 to 2.6% (excluding FE-6, with a drop of 5.7%, of which 4.1% occurred in the shipment period). The mean drop on the ten units excluding FE-6 was 1.9%. The mean deviation in percentage drop on the ten units was 0.5%.

It is to be noted that, again, as in the case of the 3½-in. units, a flowmeter which was not installed in the loop showed as great a drop in flux density over the period since initial measurement as most of the flowmeters which were installed. Also, while at ORNL, this flowmeter showed a slightly greater drop in flux density than the magnets which were installed, but it had not shown any previous drop during the shipment period. The flowmeters which were welded into the loops were subjected to a great deal of handling as well as to the welding procedure.

It might be said that the data indicate an initial instability in the magnetic circuit which may approach 3%, after which the magnet appears stable.

As may be seen, the degree of instability in the 2-in. units appears to be less than on the 3½-in. units, the mean drop in flux density being only 1.9%. However, it does appear that the drop on the 2-in. units may be of the same general type as that described for the 3½-in. units, but of lesser degree.

The statements made in the previous section concerning continuing flux monitoring and temperature cycling on the 3½-in. units also apply to the 2-in. units.

Table 2. Air Gap Flux Density History for 2-in. Magnetic Flowmeters
(Room Temperature Values)

| Loop Flow Element Number | G. E. Flowmeter Serial Number | G. E. Flux Prior to Shipment to ORNL 9/56 (gauss) | ORNL Flux Upon Receipt of Units 10/56 (gauss) | G. E. Flux Remeasured at ORNL 11/56 (gauss) | Flux Drop in Shipment 9/56–11/56 (gauss) | Flux Drop in Shipment 9/56–11/56 (%) | ORNL Flux After Installing Units 5/57–12/57 (gauss) | Flux Drop at ORNL 10/56–12/57 (gauss) | Flux Drop at ORNL 10/56–12/57 (%) | Flux Drop Since at G. E. 9/56–12/57 (gauss) | Flux Drop Since at G. E. 9/56–12/57 (%) | Deviation from Mean Flux Drop (%) |
|---|---|---|---|---|---|---|---|---|---|---|---|---|
| FE-1 | 4896690 | 525 | 519 | 518 | 7 | 1.3 | 517 | 1 | 0.2 | 8 | 1.5 | –0.4 |
| 2 | 4896691 | 532 | 528 | 527 | 5 | 0.9 | 525 | 2 | 0.4 | 7 | 1.3 | –0.6 |
| 3 | 4896694 | 533 | 527 | 522 | 11 | 2.1 | 520 | 2 | 0.4 | 13 | 2.4 | 0.5 |
| 4 | 4896700 | 532 | 535 | 532 | 0 | 0 | 527 | 5 | 0.9 | 5 | 0.9 | –1.0 |
| 5 | 4896692 | 545 | 544 | 543 | 2 | 0.4 | 535 | 8 | 1.5 | 10 | 1.8 | –0.1 |
| 6* | 4896689 | 561 | 538 | 538 | 23 | 4.1* | 529 | 9 | 1.7 | 32 | 5.7* | * |
| 3A | 4896697 | 542 | | 536 | 6 | 1.1 | 533 | 3 | 0.6 | 9 | 1.7 | –0.2 |
| 4A | 4896695 | 534 | | 526 | 8 | 1.5 | 520 | 6 | 1.1 | 14 | 2.6 | 0.7 |
| 5A | 4896699 | 521 | | 514 | 7 | 1.3 | 509 | 5 | 1.0 | 12 | 2.3 | 0.4 |
| 6A | 4896693 | 544 | | 540 | 4 | 0.7 | 531 | 9 | 1.7 | 13 | 2.4 | 0.5 |
| ** | 4896696 | 555 | | 551 | 4 | 0.7 | | | | | | |
| ** | 4896698 | 541 | | 541 | 0 | 0 | 527 | 11 | 2.0 | 11 | 2.0 | 0.1 |
| | | | | | | | | | | Av (excluding FE-6) | 1.9 | Av 0.5 |

*Crack in magnets on FE-6 noted after installation.

**Not operated.

### 3.2.4 Experimental Air Gap Flux Density vs Magnet Temperature for $3\frac{1}{2}$-in. Units

The results of the General Electric and the ORNL determination of air gap flux density vs magnet temperature for the $3\frac{1}{2}$-in. units are given in Table 3 (see also Fig. 20).

The flux density values at 100 and 600°F as initially determined by General Electric prior to shipment to ORNL are given in columns 3 and 4. The 12 individual units varied in air gap flux density at 100°F from 674 to 698 gauss, a spread of 24 gauss between units. The drop in air gap flux density over the 500°F increase in magnet temperature from 100 to 600°F was from 50 to 84 gauss. This amounted to from 7.3 to 12.6% drop in air gap flux density for the 500°F increase in temperature. The mean drop for the 12 units as determined by General Electric for the 500°F temperature rise was 9.3%, with a mean deviation of 1.2%.

The values obtained by ORNL as established during loop operation (May to December 1957) are tabulated in columns 7 and 8 (see also Fig. 20). The individual units had all dropped in air gap flux density since initial measurement at General Electric, as shown in Table 1, column 12, and as discussed in Sec 3.2.2. The ten units on which curves were run at ORNL varied in air gap flux density at 100°F from 632 to 663 gauss (Table 3, column 7), a spread of 31 gauss between units. The drop in air gap flux density over the 500°F increase in magnet temperature from 100 to 600°F as determined at ORNL was from 48 to 64 gauss (column 9). This amounted to from 7.6 to 10.1% drop in air gap flux density for the 500°F increase in temperature (column 10). The mean drop for the ten units for the 500°F temperature rise was 8.4% with a mean deviation of 0.7%.

The drops as determined by General Electric for the 12 units deviated from the mean by as much as 3.3%, with a mean deviation of 1.2%, while those determined by ORNL deviated by as much as 1.7%, with a mean deviation of 0.7%.

The difference in drop as determined by ORNL from that determined by General Electric was from 0.4 to 3.5% (column 11). The percentage drop as measured by ORNL was lower than that measured by General Electric on the units where the difference between the two measurements was appreciable. The General Electric value for percentage drop on these units was higher than the mean value.

The spread and mean deviation in percentage flux density drop for the 500°F rise in temperature for the ten units as determined by ORNL are approximately half as large as those determined as much as 15 months earlier by General Electric. It may be noted that the units appear to be tending toward a common value of approximately 8% drop in flux density for 500°F rise in magnet temperature.

It is possible that certain General Electric magnet temperature runs, particularly those showing the higher percentage flux density drops for the temperature rise, involved some irreversible flux density change which showed up as a greater slope in flux density vs magnet temperature rise. This postulate may be substantiated in three cases of greater slope (SN-4896678, FE-1, and FE-2) by referring back to Table 1, column 6, and noting that these three units show the greatest percentage flux density drop in the shipment period. Part of these losses might have been due to irreversible temperature losses or flux density losses from other occurrences during these runs, causing the apparent difference in slope between these curves and the later ones at ORNL. This does not apply, however, to FE-4A which shows the greatest drop in flux density vs magnet temperature slope, although it did show a drop in flux density of 3.4% during the shipment period.

The data indicate that, after the initial period of magnet instability is over, the drop in flux density for a 500°F rise in magnet temperature may be taken as 8% without great error. This corresponds to a flux drop due to magnet temperature rise of 1.6% per 100°F over the temperature range to 600°F. The typical drop for Alnico V as given by the manufacturer is 1.1% per 100°F. From Fig. 2, the spread for Alnico V is from 6 to 9% drop for this range. The experimental spread in drop for the units agrees quite well with this information.

Considering that it may be possible to hold the operating magnet temperatures below 300°F for most applications, 1.6% per 100°F temperature rise may be used as a design value for this specific flowmeter without serious error in flow measurement.

If the two units having the higher values of flux drop with temperature are not considered, the remaining eight units agree with the 8% flux density drop for 500°F temperature rise, with an average deviation of 0.2% and a maximum deviation

Table 3. Air Gap Flux Density Drop vs Magnet Temperature for 3½-in. Magnetic Flowmeters

| Loop Flow Element No. | G. E. Flowmeter Serial Number | Initial General Electric Data[a] | | | | ORNL Data[b,c] | | | | Difference in ORNL Flux Drop from G.E. 100–600°F (%) |
|---|---|---|---|---|---|---|---|---|---|---|
| | | Air Gap Flux Density | | | | Air Gap Flux Density | | | | |
| | | 100°F Magnet Temperature (gauss) | 600°F Magnet Temperature (gauss) | Flux Drop 100–600°F (gauss) | Flux Drop 100–600°F (%) | 100°F Magnet Temperature (gauss) | 600°F Magnet Temperature (gauss) | Flux Drop 100–600°F (gauss) | Flux Drop 100–600°F (%) | |
| FE-1 | 4896685 | 678 | 606 | 72 | 10.6 | 644 | 592 | 52 | 8.1 | –2.5 |
| 2 | 4896682 | 666 | 582 | 84 | 12.6 | 632 | 568 | 64 | 10.1 | –2.5 |
| 3 | 4896681 | 686 | 636 | 50 | 7.3 | 649 | 599 | 50 | 7.7 | 0.4 |
| 4 | 4896680 | 687 | 628 | 59 | 8.6 | 647 | 595 | 52 | 8.0 | –0.6 |
| 5 | 4896684 | 668 | 615 | 53 | 7.9 | 635 | 579 | 56 | 8.8 | 0.9 |
| 6[c] | 4896688 | 680 | 622 | 58 | 8.5 | 637 | 575[c] | 62[c] | 9.7[c] | 1.2[c] |
| 3A | 4896686 | 696 | 634 | 62 | 8.9 | 659 | 606 | 53 | 8.0 | –0.9 |
| 4A | 4896677 | 674 | 599 | 75 | 11.1 | 635 | 587 | 48 | 7.6 | –3.5 |
| 5A | 4896687 | 690 | 638 | 52 | 7.5 | 658 | 606 | 52 | 7.9 | 0.4 |
| 6A | 4896679 | 698 | 634 | 64 | 9.2 | 663 | 611 | 52 | 7.8 | –1.4 |
| *d* | 4896678 | 680 | 612 | 68 | 10.0 | | | | | |
| *d* | 4896683 | 683 | 622 | 61 | 8.9 | | | | | |
| | | | | Mean | 9.3 | | | Mean | 8.4 | Mean 1.4 |
| | | | | Mean deviation | 1.2 | | | Mean deviation | 0.7 | |

[a]G. E. values based on graphs supplied with flowmeters, covering magnet temperatures to 800°F.

[b]ORNL data based on 50 to 360 flux density measurements at magnet temperatures from 60–650°F, during normal loop operation and during magnet temperature runs.

[c]Data on FE-6 based on flux density values obtained at normal operating temperatures; no magnet temperature runs made on FE-6.

[d]Flowmeters SN-4896678 and SN-4896683 not operated at ORNL.

of 0.8%. The two higher values are approximately 2% higher than the 8% value.

If the magnet temperature is held between 100 and 300°F, the variation in flux density and therefore the change in output voltage due to magnet temperature may be as much as 3.2%, for the typical unit.

### 3.2.5 Experimental Air Gap Flux Density vs Magnet Temperature for 2-in. Units

The results of the General Electric and the ORNL determination of air gap flux density vs magnet temperature for the 2-in. units are given in Table 4 (see also Fig. 21). Column 5 gives the flux density drop in each of the 12 units for an increase of 500°F in magnet temperature from 100 to 600°F as measured by General Electric prior to shipment to ORNL in September 1956. The measured drop ranged from 36 to 61 gauss. Note that FE-6, which showed the 61-gauss drop, was found to be cracked after installation at ORNL. The comparison of this 61-gauss drop with the 34-gauss drop as measured by ORNL (column 9) and the observation that the 600°F flux values as measured by General Electric and by ORNL (columns 4 and 8) were the same within 1% may indicate that some change, such as stress relief in the magnets, occurred during the heating of this magnet to 800°F at General Electric. With the flux drop as obtained on this questionable unit disregarded the flux drop on the remaining 11 units as measured by General Electric ranged from 36 to 49 gauss (column 5). This drop amounted to from 6.8 to 9.1% of the 100°F flux density values (column 6), with a mean drop of 8.0% for the 11 units.

The values obtained from the graphs (Fig. 21) as established during loop operation by ORNL (May to December 1957) show flux density drops for ten units including the cracked unit of from 34 to 44 gauss due to the 500°F temperature increase from 100 to 600°F (column 9). Disregarding the cracked unit, the drop ranged from 37 to 44 gauss and amounted to from 7.0 to 8.5% of the 100°F flux density values, with a mean drop of 7.4% for nine units (column 10). The difference in drop as determined by ORNL from that determined by General Electric ranged from 0.2 to 1.7%, disregarding the unit with the broken magnet, in which the difference was 4.5%. The mean difference was only 0.7%, the agreement between the two determinations being quite good.

From these data it may be concluded that for the typical 2-in. magnetic flowmeter of this design the drop in flux density due to a temperature rise of 500°F may be taken as 7.5%. The flowmeter may be said to lose about 1.5% of its flux per 100°F rise in temperature over the range to 600°F, as compared with the typical drop for Alnico V of 1.1% per 100°F rise as given by the manufacturer. From Fig. 2, the spread for Alnico V is from 6 to 9% drop for this range, which agrees with the experimental spread.

Considering that it may be possible to hold the magnet temperatures below 300°F for most applications and that the flux density drops as measured for the different flowmeters agree within 1% for 500°F temperature rise, it appears that the typical value of flux drop (1.5% per 100°F) could be used for flowmeters of this design, with negligible error.

### 3.2.6 Experimental Air Gap to Leakage Flux Density Ratios

As previously described, the method used for monitoring air gap flux density with the pipe in place in the air gap involved the measurement of the leakage flux density in a specific location with respect to the air gap. The leakage flux was assumed to reflect the percentage change in air gap flux and was related to air gap flux by a ratio which was determined by actual measurement of the two flux densities. To determine air gap flux density from the leakage flux density it was necessary to multiply by the air gap to leakage flux ratio.

Table 5 gives the air gap to leakage flux ratios as determined at ORNL. The $3\frac{1}{2}$-in. flowmeters have ratios from 2.19 to 2.23, a spread of approximately 2%, while the 2-in.-flowmeter ratios range from 2.28 to 2.34, a spread of 3%. The ratios are very close to the mean value in most cases. For the 2-in. units the ratios are within 0.5% of the mean value, with the exception of one unit. The $3\frac{1}{2}$-in. units have ratios within 1% of the mean.

One of the $3\frac{1}{2}$-in. units was disassembled after it had operated in the loop for 3138 hr and then been removed, and the air gap leakage flux density ratio was redetermined. It was found to be the same as when originally determined 14 months previously.

The flux ratio method of determining air gap flux density appears to be satisfactory. It is possible to determine a typical ratio and apply it

**Table 4. Air Gap Flux Density Drop vs Magnet Temperature for 2-in. Magnetic Flowmeters**

| Loop Flow Element Number | G. E. Flowmeter Serial Number | Initial General Electric Data[a] | | | | ORNL Data[b] | | | | Difference in ORNL Flux Drop from G. E., 100–600° F (%) |
|---|---|---|---|---|---|---|---|---|---|---|
| | | Air Gap Flux Density | | | | Air Gap Flux Density | | | | |
| | | 100° F Magnet Temperature (gauss) | 600° F Magnet Temperature (gauss) | Flux Drop, 100–600° F (gauss) | Flux Drop, 100–600° F (%) | 100° F Magnet Temperature (gauss) | 600° F Magnet Temperature (gauss) | Flux Drop, 100–600° F (gauss) | Flux Drop, 100–600° F (%) | |
| FE-1 | 4896690 | 524 | 482 | 42 | 8.0 | 515 | 473 | 42 | 8.2 | 0.2 |
| 2 | 4896691 | 531 | 485 | 46 | 8.7 | 524 | 485 | 39 | 7.4 | –1.3 |
| 3 | 4896694 | 532 | 489 | 43 | 8.1 | 518 | 474 | 44 | 8.5 | 0.4 |
| 4 | 4896700 | 532 | 496 | 36 | 6.8 | 526 | 489 | 37 | 7.0 | 0.2 |
| 5 | 4896692 | 544 | 500 | 44 | 8.1 | 533 | 495 | 38 | 7.1 | –1.0 |
| 6 | 4896689 | 559 | 498 | 61 | 10.9[c] | 528 | 494 | 34 | 6.4 | –4.5[c] |
| 3A[d] | 4896697 | 541 | 498 | 43 | 7.9 | 531 | 493 | 38 | 7.2 | –0.7 |
| 4A[d] | 4896695 | 533 | 494 | 39 | 7.3 | 519 | 482 | 37 | 7.1 | –0.2 |
| 5A[d] | 4896699 | 519 | 472 | 47 | 9.1 | 507 | 470 | 37 | 7.3 | –1.7 |
| 6A[d] | 4896693 | 543 | 503 | 40 | 7.4 | 530 | 493 | 37 | 7.0 | –0.4 |
| e | 4896696 | 553 | 504 | 49 | 8.9 | | | | | |
| e | 4896698 | 539 | 500 | 39 | 7.2 | | | | | |
| | | | | Mean (excluding FE-6) | 8.0 | | | Mean | 7.4 | Mean 0.7 |
| | | | | Mean deviation | 0.5 | | | Mean deviation | 0.4 | |

[a]G. E. values based on graphs supplied with flowmeters, which covered magnet temperatures to 800° F.

[b]ORNL data based on 150 to 360 flux density measurements at magnet temperatures from 60–600° F during normal loop operation and during magnet temperature runs.

[c]Crack in magnets on FE-6 noted after installation.

[d]Data based on flux density values obtained at normal operating temperatures; no magnet temperature runs made on FE-3A–FE-6A.

[e]Flowmeters SN-4896696 and SN-4896698 not operated at ORNL.

Table 5. Air Gap to Leakage Flux Density Ratio

| Loop Flow Element Number | $3\frac{1}{2}$-in. Flowmeter | | 2-in. Flowmeter | |
|---|---|---|---|---|
| | G.E. Serial Number | Ratio | G.E. Serial Number | Ratio |
| FE-1 | 4896685 | 2.22 | 4896690 | 2.33 |
| 2 | 4896682 | 2.19 | 4896691 | 2.34 |
| 3 | 4896681 | 2.19 | 4896694 | 2.34 |
| 4 | 4896680 | 2.21 | 4896700 | 2.34 |
| 5 | 4896684 | 2.21 | 4896692 | 2.28 |
| 6 | 4896688 | 2.20 | 4896689 | 2.34 |
| 3A | 4896686 | 2.20 | 4896697 | 2.34 |
| 4A | 4896677 | 2.21 | 4896695 | 2.34 |
| 5A | 4896687 | 2.22 | 4896699 | 2.34 |
| 6A | 4896679 | 2.22 | 4896693 | 2.33 |
| | 4896683 | 2.23 | 4896696 | 2.34 |
| | 4896678 | 2.21 | 4896698 | 2.34 |
| | Mean | 2.21 | Mean | 2.33 |

to all units of a particular type, if flux measurement accuracy better than 3% is not desired. If accuracy better than 3% is desired, it is necessary to determine the ratio for each individual unit. If the leakage flux coil may be positioned closer to the signal electrode position, the assumption of similarity in ratio between units becomes more accurate due to less variation in field configuration.

In applying the flux ratio method it is essential to provide accurate leakage flux search coil positioning, since a change of coil position in the nonuniform leakage flux field will produce an inaccuracy in flux measurement. If more than one search coil is provided, each should be compared by measurement of a nonuniform field using a positioning fixture or by comparison of readings on the same flowmeter. This would reveal any differences in the positioning bracket on the coil which would result in inaccuracy. This procedure is necessary in addition to the calibration of the coil by the usual method in a uniform field for $NA$ value (turns times square centimeters), since differences in positioning brackets do not show up in a uniform field. If the coils are not exactly similar as to positioning, a different flux ratio must be experimentally determined for each search coil.

### 3.3 FLUID TEMPERATURE EFFECTS

As previously discussed, the $Y$ factor is a magnetic flowmeter operational concept which describes the effect of the flowing fluid temperature on flowmeter output sensitivity. The $Y$ factor as theoretically derived is given in Eq. (11) and includes all factors which are considered theoretically to affect flowmeter output sensitivity in normal operation except air gap flux density [Eq. (12)].

#### 3.3.1 Experimental Determination of $Y$ Factor

The curves showing $Y$ factor vs fluid temperature over the range 400 to 1500°F as determined experimentally on the PK calibration loops for ten 2-in. flowmeters and ten $3\frac{1}{2}$-in. flowmeters are shown graphically in Figs. 22 and 23. Points obtained from these curves are given in Tables 6 and 7 along with information to evaluate and compare the experimental curves for the ten flowmeters. In Tables 8 and 9 the experimental $Y$-factor values are compared with the theoretical $Y$ factors as calculated for each flowmeter by General Electric from Eq. (11).

The $Y$-factor curves are based on calibration runs, comprising constant temperature and constant

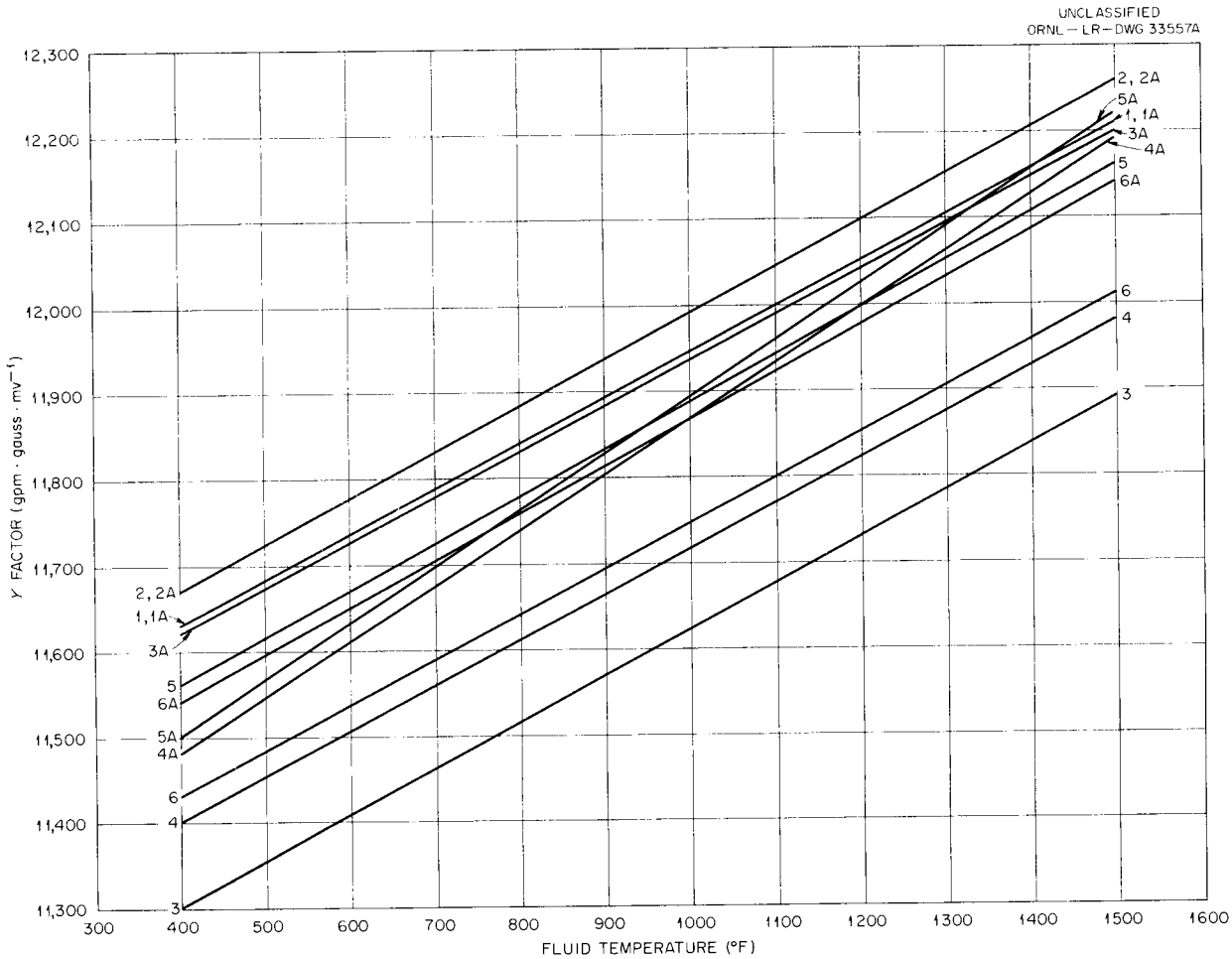


**Fig. 22. Experimental $Y$-Factor Curves for $3\frac{1}{2}$-in. Magnetic Flowmeters (ORNL Calibration).**

flow runs, as previously described. These runs comprised from 210 to 560 individual sets of flow readings for each curve, covering the temperature and flow range of the calibration for each curve as described in Sec 2.3.

The data were read during the calibration run from the recorder scales and were entered on special data sheets. The data were time-coded in such a manner that reference back to the recorder charts could be made in cases of questionable readings. The calibration runs were made at normal loop magnet temperatures varying from 100 to 305°F. It was necessary to record loop flow as indicated by the venturi differential pressure recorder, loop fluid temperature, voltage output for each flowmeter, and magnet temperature for each flowmeter.

The experimental $Y$ factor corresponding to each fluid temperature as covered by the constant temperature and constant flow runs was calculated for each of the individual flow readings from the relation of Eq. (12),

$$Y_{(T_f)} = \frac{Q\,B_{(T_m)}}{E}$$

where

$Y_{(T_f)}$ = $Y$ factor calculated for the fluid temperature $T_f$,

$B_{(T_m)}$ = air gap flux density in gauss as read from ORNL graphs (Figs. 20 and 21) for the magnet temperature, $T_m$,

$Q$ = loop flow in gpm as measured by the venturi,

$E$ = magnetic flowmeter output voltage in mv as read from the recorder scale.

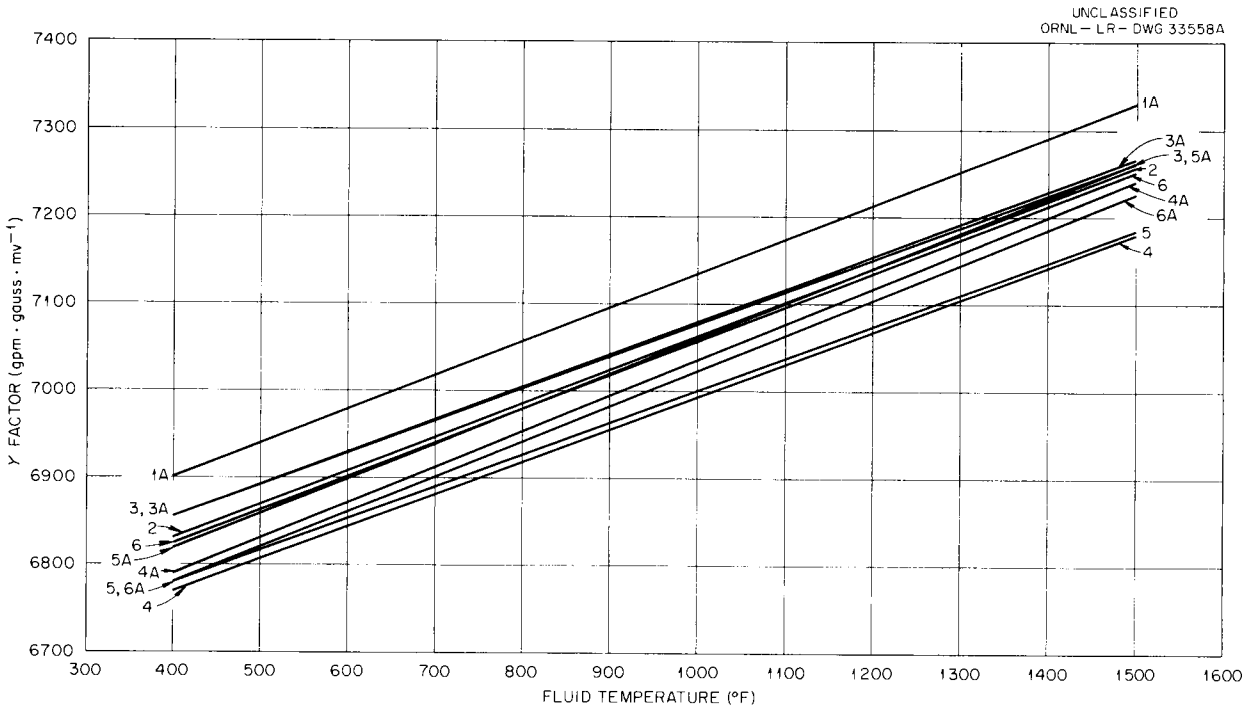


**Fig. 23. Experimental *Y*-Factor Curves for 2-in. Magnetic Flowmeters (ORNL Calibration).**

The values of the *Y* factor were calculated from this relation for each of the 210 to 560 readings of flow for the flow and fluid temperature conditions of the calibration runs.

The calibration runs to obtain the *Y* factors extended over a period of from two weeks to a month for each lot of magnets. Since four reference units remained in the loops through the entire calibration of the two lots (two of each size of unit), the *Y*-factor curves on those four units were obtained from two calibration runs which were separated by as much as four months. The *Y*-factor curve for one of the 3½-in. reference units, FE-1, is shown in Fig. 24. The points obtained from the mean values of the *Y* factor in the controlled calibration runs are plotted. The points shown as obtained from lot No. 2 were taken approximately four months later than those for lot No. 1.

The experimental *Y* curves were obtained by grouping all the calculated *Y* factors according to fluid temperature at 100°F intervals over the fluid temperature range of the constant temperature and constant flow runs. The points obtained by grouping the constant temperature and the constant flow run readings were plotted for each fluid temperature, and the best straight-line curve was fitted to the points, with the greatest weight attached to points near the normal operating temperature.

For the 2-in. units each fluid temperature point on the *Y*-factor curve was the mean of at least eight readings at that fluid temperature, with a reading for each 50-gpm interval of flow range. Each flow was covered twice at each fluid temperature, once by a constant flow run and once by the constant temperature run, to give a total of 16 readings of *Y* factor at each fluid temperature.

For the 3½-in. units each fluid temperature point on the *Y*-factor curve was the mean of at least 11 readings at that fluid temperature, with a reading for each 100 gpm of flow range. Each flow was covered twice at each fluid temperature, once by a constant flow run and once by the constant temperature run, to give a total of 22 readings of *Y* factor at each fluid temperature. Some of the runs were made again after a period of time and were found to be repeatable.

In addition to the controlled calibration runs, data were taken by building operating personnel

Table 6. ORNL Experimental $Y$-Factor Data for $3\frac{1}{2}$-in. Magnetic Flowmeters

| Loop Flow Element Number | G.E. Flowmeter Serial Number | Approximate Number of Readings Determining Experimental $Y$-Factor Curve | Mean Deviation of Reading from Experimental $Y$-Factor Curve (%) | Experimental $Y$ Factor (gpm-gauss/mv) | | Increase in $Y$ Factor from 400–1500°F | | Maximum Difference Between Experimental and Theoretical $Y$ Factor (%) |
|---|---|---|---|---|---|---|---|---|
| | | | | At 400°F | At 1500°F | gpm-gauss/mv | % | |
| FE-1 | 4896685 | 560 | 0.4 | 11,630 | 12,210 | 580 | 5.0 | 5.6 |
| 2 | 4896682 | 560 | 0.5 | 11,670 | 12,260 | 590 | 5.1 | 5.2 |
| 3 | 4896681 | 210 | 0.4 | 11,300 | 11,890 | 590 | 5.2 | 8.2 |
| 4 | 4896680 | 210 | 0.3 | 11,400 | 11,980 | 580 | 5.1 | 7.4 |
| 5 | 4896684 | 210 | 0.4 | 11,560 | 12,160 | 600 | 5.2 | 6.5 |
| 6 | 4896688 | 210 | 0.4 | 11,430 | 12,010 | 580 | 5.1 | 7.3 |
| 3A | 4896686 | 250 | 0.6 | 11,620 | 12,200 | 580 | 5.0 | 5.7 |
| 4A | 4896677 | 250 | 0.4 | 11,480 | 12,190 | 710 | 6.2 | 5.9 |
| 5A | 4896687 | 250 | 0.4 | 11,500 | 12,220 | 720 | 6.3 | 5.6 |
| 6A | 4896679 | 250 | 0.3 | 11,540 | 12,140 | 600 | 5.2 | 6.1 |
| | | | Mean values | 11,513 | 12,126 | 613 | 5.3 | 6.3 |
| | | | Mean deviation | 94 | 100 | 41 | 0.3 | 0.8 |
| | | | Spread | 370 | 370 | 140 | 1.3 | 3.0 |
| | | | % mean deviation | 0.8 | 0.8 | | | |
| | | | % spread | 3.2 | 3.1 | | | |

at approximately 2-hr intervals over the entire period of loop operation. These data were taken to keep a close monitor on changes in flowmeter characteristics which might occur in the long-term operational period. Although the indicated $Y$-factor values have not been calculated for all of this body of data, it has been analyzed at intervals throughout the operation period sufficiently to ascertain that the flowmeters maintained the $Y$-factor values as obtained on the calibration runs throughout the operation period. This was true with the exception of one of the 2-in. reference units, FE-1, which did not attain normal operation in lot No. 1. In lot No. 2, FE-1 maintained its $Y$-factor value throughout. This exception is discussed later. The period of operation over which the $Y$ factor was monitored covered as much as 3138 operating hours for the $3\frac{1}{2}$-in. units and 2953 operating hours for the 2-in. units. The elapsed times were ten months for the $3\frac{1}{2}$-in. units and seven months for the 2-in. units.

The $Y$ factor was also checked over an extended magnet temperature range by the magnet temperature runs, in which the flow values were recorded while the magnets were heated to as high as 700°F. The results are discussed in a later section.

The mean percentage deviation of all the points obtained from the controlled calibration runs from the straight-line $Y$-factor curves (Figs. 22 and 23) was not greater than 0.6% in any case (see Tables 6 and 7, column 4). Note the spread of the points

Table 7. ORNL Experimental $Y$-Factor Data for 2-in. Magnetic Flowmeters

| Loop Flow Element Number | G.E. Flowmeter Serial Number | Approximate Number of Readings Determining Experimental $Y$-Factor Curve | Mean Deviation of Reading from Experimental $Y$-Factor Curve (%) | Experimental $Y$ Factor (gpm-gauss/mv) | | Increase in $Y$ Factor from 400–1500°F | | Maximum Difference Between Experimental and Theoretical $Y$ Factor (%) |
|---|---|---|---|---|---|---|---|---|
| | | | | At 400°F | At 1500°F | gpm-gauss/mv | % | |
| FE-1A* | 4896690 | 275 | 0.4 | 6900 | 7330 | 430 | 6.2 | 4.3 |
| 2 | 4896691 | 485 | 0.3 | 6830 | 7255 | 425 | 6.2 | 5.2 |
| 3 | 4896694 | 210 | 0.5 | 6855 | 7260 | 405 | 5.9 | 5.5 |
| 4 | 4896700 | 210 | 0.6 | 6770 | 7180 | 410 | 6.1 | 6.1 |
| 5 | 4896692 | 210 | 0.6 | 6780 | 7185 | 405 | 6.0 | 6.0 |
| 6 | 4896689 | 210 | 0.5 | 6825 | 7250 | 425 | 6.2 | 5.4 |
| 3A | 4896697 | 275 | 0.5 | 6855 | 7265 | 410 | 6.0 | 5.2 |
| 4A | 4896695 | 275 | 0.4 | 6790 | 7240 | 450 | 6.6 | 5.6 |
| 5A | 4896699 | 275 | 0.4 | 6820 | 7260 | 440 | 6.5 | 5.1 |
| 6A | 4896693 | 275 | 0.4 | 6780 | 7225 | 445 | 6.6 | 5.8 |
| | | | Mean values | 6821 | 7245 | 425 | 6.2 | 5.4 |
| | | | Mean deviation | 33 | 30 | 14 | 0.2 | 0.4 |
| | | | Spread | 130 | 150 | 40 | 0.7 | 1.8 |
| | | | % mean deviation | 0.5 | 0.4 | | | |
| | | | % spread | 1.9 | 2.1 | | | |

*$Y$-factor values obtained on FE-1 were not valid. Values obtained on lot No. 2 (FE-1A) were tabulated.

obtained from the mean values of the calibration runs on the 3½-in. FE-1 in comparison with a 1% deviation from the graph as shown in Fig. 24.

### 3.3.2 Experimental $Y$ Factor for 3½-in. Units

Figure 22 shows the experimental $Y$-factor curves for the ten 3½-in. magnetic flowmeters calibrated at ORNL. Information evaluating and comparing the curves for the different units is given in Table 6. In columns 3 and 4 the approximate number of $Y$-factor readings taken in the calibration runs on which the curves were based are tabulated with the mean percentage deviation of the readings from the curves. For FE-1 and FE-2, 560 $Y$-factor readings were obtained (column 3), covering fluid temperatures from 400 to 1500°F, flows from 600 to 1600 gpm, and magnet temperatures from 100 to 305°F over a period of elapsed time during operation of four months. The mean deviations of the readings from the graph are 0.4 and 0.5%, respectively (column 4). The implication is, then, that the average error in measuring flow with either of these units using the experimental $Y$ factor of Fig. 22 and the flux density curves of Fig. 20 did not exceed 0.4 or 0.5% of the flow reading during runs separated by a four-month period. The loop was opened and flowmeters 3A to 6A were welded in during the interval between the two sets of runs. This operation did not affect the accuracy of the units.

The reproducibility of the measurements was then 0.4 or 0.5% of the flow. This does not mean

Table 8. Comparison of Experimental and Theoretical $Y$ Factors for $3\frac{1}{2}$-in. Magnetic Flowmeters

| Loop Flow Element Number | G.E. Flowmeter Serial Number | $Y$ Factor at 800°F (gpm-gauss/mv) | | $Y$ Factor at 1500°F (gpm-gauss/mv) | | $Y$-Factor Increase from 800–1500°F (gpm-gauss/mv) | | $Y$-Factor Increase from 800–1500°F (%) | | Difference in Increase of Experimental from Theoretical (%) | Difference in 800°F Experimental from Theoretical | |
|---|---|---|---|---|---|---|---|---|---|---|---|---|
| | | G.E. Theoretical | ORNL Experimental | G.E. Theoretical | ORNL Experimental | G.E. Theoretical | ORNL Experimental | G.E. Theoretical | ORNL Experimental | | gpm-gauss/mv | % |
| FE-1 | 4896685 | 12,340 | 11,840 | 12,940 | 12,210 | 600 | 370 | 4.9 | 3.1 | −1.8 | 500 | −4.1 |
| 2 | 4896682 | 12,350 | 11,880 | 12,930 | 12,260 | 580 | 380 | 4.7 | 3.2 | −1.5 | 470 | −3.8 |
| 3 | 4896681 | 12,350 | 11,520 | 12,950 | 11,890 | 600 | 370 | 4.9 | 3.2 | −1.7 | 830 | −6.7 |
| 4 | 4896680 | 12,310 | 11,610 | 12,940 | 11,980 | 630 | 370 | 5.1 | 3.2 | −1.9 | 700 | −5.7 |
| 5 | 4896684 | 12,390 | 11,780 | 13,010 | 12,160 | 620 | 380 | 5.0 | 3.2 | −1.8 | 610 | −4.9 |
| 6 | 4896688 | 12,370 | 11,640 | 12,950 | 12,010 | 580 | 370 | 4.7 | 3.2 | −1.5 | 730 | −5.9 |
| 3A | 4896686 | 12,350 | 11,830 | 12,940 | 12,200 | 590 | 370 | 4.8 | 3.1 | −1.7 | 520 | −4.2 |
| 4A | 4896677 | 12,350 | 11,740 | 12,950 | 12,190 | 600 | 450 | 4.9 | 3.8 | −1.1 | 610 | −4.9 |
| 5A | 4896687 | 12,350 | 11,760 | 12,950 | 12,220 | 600 | 460 | 4.9 | 3.9 | −1.0 | 590 | −4.8 |
| 6A | 4896679 | 12,330 | 11,750 | 12,930 | 12,140 | 600 | 390 | 4.9 | 3.3 | −1.6 | 580 | −4.7 |
| * | 4896678 | 12,340 | | 12,940 | | 600 | | 4.9 | | | | |
| * | 4896683 | 12,350 | | 12,950 | | 600 | | 4.9 | | | | |
| | Mean values | 12,348 | 11,735 | 12,948 | 12,126 | 600 | 391 | 4.9 | 3.3 | 1.6 | 614 | 5.0 |
| | Mean deviation | 12 | 87 | 12 | 100 | 8 | 26 | 0.07 | 0.2 | 0.2 | 84 | 0.7 |
| | Spread | 80 | 360 | 80 | 370 | 50 | 90 | 0.4 | 0.8 | 0.9 | 360 | 2.9 |
| | % mean deviation | 0.1 | 0.7 | 0.1 | 0.8 | | | | | | | |
| | % spread | 0.6 | 3.1 | 0.6 | 3.1 | | | | | | | |

*Magnetic flowmeters SN-4896678 and SN-4896683 were not calibrated at ORNL.

Table 9. Comparison of Experimental and Theoretical *Y* Factors for 2-in. Magnetic Flowmeters

| Loop Flow Element Number | G.E. Flowmeter Serial Number | *Y* Factor at 800°F (gpm-gauss/mv) | | *Y* Factor at 1500°F (gpm-gauss/mv) | | *Y*-Factor Increase from 800–1500°F (gpm-gauss/mv) | | *Y*-Factor Increase from 800–1500°F (%) | | Difference in Increase of Experimental from Theoretical (%) | Difference in 800°F Experimental from Theoretical | |
|---|---|---|---|---|---|---|---|---|---|---|---|---|
| | | G.E. Theoretical | ORNL Experimental | G.E. Theoretical | ORNL Experimental | G.E. Theoretical | ORNL Experimental | G.E. Theoretical | ORNL Experimental | | gpm-gauss/mv | % |
| FE-1A* | 4896690 | 7267 | 7065 | 7660 | 7330 | 393 | 265 | 5.4 | 3.8 | −1.6 | −202 | 2.8 |
| 2 | 4896691 | 7262 | 6985 | 7650 | 7255 | 388 | 270 | 5.3 | 3.9 | −1.4 | −277 | 3.8 |
| 3 | 4896694 | 7290 | 7005 | 7680 | 7260 | 390 | 255 | 5.3 | 3.6 | −1.7 | −285 | 3.9 |
| 4 | 4896700 | 7260 | 6925 | 7650 | 7180 | 390 | 255 | 5.4 | 3.7 | −1.7 | −335 | 4.6 |
| 5 | 4896692 | 7245 | 6930 | 7640 | 7185 | 395 | 255 | 5.5 | 3.7 | −1.8 | −315 | 4.3 |
| 6 | 4896689 | 7272 | 6980 | 7664 | 7250 | 392 | 270 | 5.4 | 3.9 | −1.5 | −292 | 4.0 |
| 3A | 4896697 | 7270 | 7005 | 7660 | 7265 | 390 | 260 | 5.4 | 3.7 | −1.7 | −265 | 3.6 |
| 4A | 4896695 | 7275 | 6955 | 7667 | 7240 | 392 | 285 | 5.4 | 4.1 | −1.3 | −320 | 4.4 |
| 5A | 4896699 | 7265 | 6980 | 7647 | 7260 | 382 | 280 | 5.3 | 4.0 | −1.3 | −285 | 3.9 |
| 6A | 4896693 | 7278 | 6940 | 7668 | 7225 | 390 | 285 | 5.4 | 4.1 | −1.3 | −338 | 4.6 |
| ** | 4896696 | 7255 | | 7640 | | 385 | | 5.3 | | | | |
| ** | 4896698 | 7250 | | 7640 | | 390 | | 5.4 | | | | |
| Mean values | | 7266 | 6977 | 7656 | 7245 | 390 | 268 | 5.4 | 3.9 | 1.5 | 291 | 4.0 |
| Mean deviation | | 10 | 32 | 11 | 30 | 2 | 11 | 0.04 | 0.15 | 0.17 | 29 | 0.4 |
| Spread | | 45 | 140 | 40 | 150 | 13 | 30 | 0.2 | 0.5 | 0.5 | 136 | 1.8 |
| % mean deviation | | 0.1 | 0.5 | 0.1 | 0.4 | | | | | | | |
| % spread | | 0.6 | 2.0 | 0.5 | 2.1 | | | | | | | |

*Magnetic flowmeters SN-4896696 and SN-4896698 were not calibrated at ORNL.

**Y-factor values obtained on FE-1 were not valid. Values obtained on lot No. 2 (FE-1A) were tabulated.

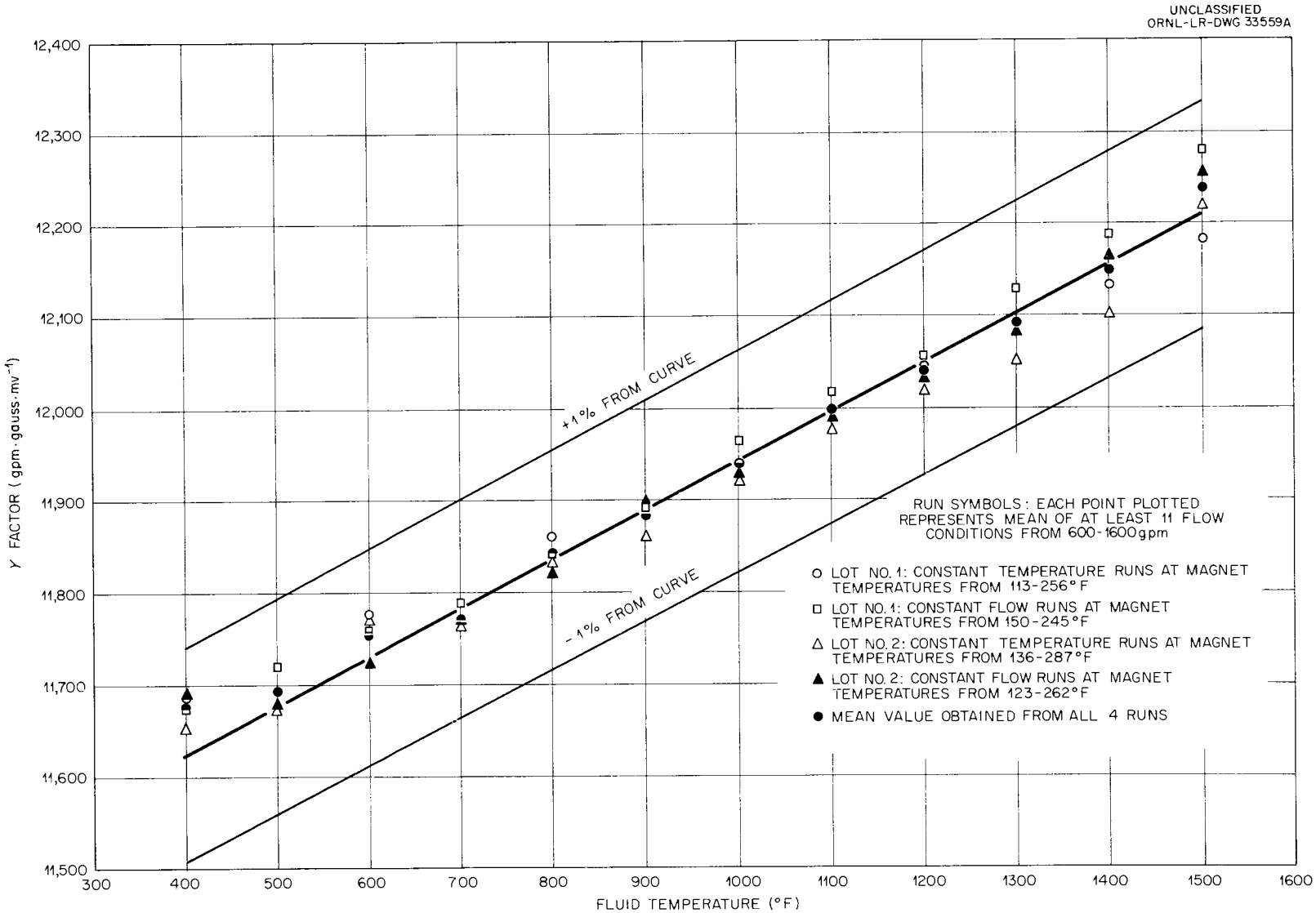


**Fig. 24. *Y* Factor vs Fluid Temperature for $3\frac{1}{2}$-in. Magnetic Flowmeter FE-1 SN 4896685. Straight-line fitting.**

that the error incurred in measuring flow with the units using the experimental $Y$-factor curve and flux density curve did not exceed 0.4 to 0.5%. It says that in the 560 flow readings by the magnetic flowmeter the average determination of flow was in error (differed from the venturi indication) by 0.4 or 0.5% of the flow reading.

The remainder of the units were calibrated with either lot No. 1 or No. 2. The mean deviation of the reading of flow by the magnetic flowmeter using the experimental curves from the flow as measured by the venturi ranged from 0.3 to 0.6% of flow for the ten units (column 4).

A pessimistic evaluation of the indicated reproducibility of the calibration would be 1% of flow on the basis of the percentage mean deviation obtained with the calibration loop used. A more optimistic view would be to say that the flowmeters were as good with respect to reproducibility as the calibration loop, because the accuracy of the loop itself in the flow comparison is probably of the order of 1% of flow based on stated accuracy of the instruments used. The loop instrumentation was originally intended for the range of 3 to 5% accuracy.

In addition to the uncertainty of reproducibility in the loop instrumentation itself, error in determination of the slope of the air gap flux density vs magnet temperature would add to the deviation in $Y$ factor by making the indicated $Y$ factor a function of magnet temperature.

Therefore, considering these uncertainties in the experiment itself and recognizing that the mean percentage deviation of flow as indicated by the magnetic flowmeters from flow as indicated by the venturi must be the combination of errors in the loop instrumentation itself plus changes in the magnetic flowmeter sensitivity, the optimistic view appears justified.

The mean percentage deviation from the $Y$-factor curve (which reflects a deviation in flow measurement reproducibility) at this low percentage range may have resulted from the loop instrumentation and errors in flux density vs magnet temperature slope, from the units under test, or even from random errors in reading instruments and in computing such a bulk of data by hand.

The values of the experimental $Y$ factor at 400°F on the ten 3½-in. units are tabulated in column 5. The mean value for the ten units is 11,513 gpm-gauss/mv. The mean deviation between the ten units is 0.8%, and the spread is 3.2%. The $Y$ factors at 1500°F are tabulated in column 6. The mean value for the ten units is 12,126 gpm-gauss/mv, with 0.8% mean deviation and 3.1% spread between units. The increase in $Y$ factor with an 1100°F increase in fluid temperatures from 400 to 1500°F, tabulated in column 8, is from 5.0 to 6.3%, a spread of 1.3%. The mean value of change in $Y$ factor with fluid temperature is 5.3%, with a mean deviation between units of 0.3%.

The typical 3½-in. flowmeter from the ten units calibrated could be said to have $Y$-factor characteristics as follows:

| | |
|---|---|
| $Y$ factor at 400°F | 11,513 gpm-gauss/mv |
| $Y$ factor at 1500°F | 12,126 gpm-gauss/mv |
| Change in $Y$ factor from 400 to 1500°F | 5.3% |
| Change in $Y$ factor per 100°F | 0.5% |

If these typical values were used as operating $Y$ factors in new uncalibrated units of this design, the error in $Y$ factor at 1500°F for any unit could approach 2%, on the basis of the maximum deviation of the ten units tested from the mean value.

With the percentage mean deviation used as a standard of comparison, the mean error in $Y$ factor in using the typical $Y$ factors on units without calibration might be expected to be of the order of 0.8%.

### 3.3.3 Experimental $Y$ Factor for 2-in. Units

Figure 23 shows the experimental $Y$-factor curves for the ten 2-in. magnetic flowmeters calibrated at ORNL. Information evaluating and comparing the curves for the different units is given in Table 7, which is similar to Table 6, for the 3½-in. units. Magnetic flowmeter FE-1 did not attain a normal reliable indication until it was run with the second lot of flowmeters as FE-1A. Table 7 includes only the $Y$-factor values for FE-1A as obtained in lot No. 2.

The $Y$-factor curves (Fig. 23) are based on from 210 to 485 readings (column 3), and the mean deviations of the readings from the curve are from 0.3 to 0.6% (column 4), which is similar to the deviations for the 3½-in. units.

The statements concerning reproducibility which were made for the 3½-in. units apply to the 2-in. units.

The experimental $Y$ factors for the ten units at a fluid temperature of 400°F range from 6770 to 6900 gpm-gauss/mv, with a mean value of 6821 gpm-gauss/mv (column 5). The spread in $Y$ factor at 400°F between the units is 1.9%, with a mean deviation of 0.5% (column 5).

At a fluid temperature of 1500°F the $Y$ factors for the ten units range from 7180 to 7330 gpm-gauss/mv, with a mean value of 7245 gpm-gauss/mv (column 6). The spread in $Y$ factor at 1500°F between the units is 2.1%, with a mean deviation of 0.4% (column 6).

The increase in $Y$ factor for the 1100°F increase in fluid temperature from 400 to 1500°F for the ten units ranged from 5.9 to 6.6%, with a spread of 0.7% and a mean deviation of 0.2% (column 8).

The typical 2-in. flowmeter from the ten units calibrated could be said to have $Y$-factor characteristics as follows:

| | |
|---|---|
| $Y$ factor at 400°F | 6821 gpm-gauss/mv |
| $Y$ factor at 1500°F | 7245 gpm-gauss/mv |
| Change in $Y$ factor from 400 to 1500°F | 6.2% |
| Change in $Y$ factor per 100°F | 0.6% |

If these typical values were used as operating $Y$ factors in new uncalibrated units of this design, the error in $Y$ factor at 1500°F for any unit could approach 1%, on the basis of the maximum deviation of the ten units tested from the mean value.

With the percentage mean deviation used as a standard of comparison, the mean error in $Y$ factor in using the typical $Y$ factors on the units without calibration might be expected to be of the order of 0.5%.

These values in themselves, however, give no basis for applying the calibration results to magnetic flowmeters of different parameters. It is only by comparison of calibration results with the theoretical values, and by subsequent verification, modification of the theoretical relations, or redesign of units to better reproduce theoretical conditions, that magnetic flowmeters may be confidently designed to meet high accuracy requirements on the basis of theoretical considerations alone without actual calibration.

### 3.3.4 Comparison of Experimental $Y$ Factor with Theoretical $Y$ Factor

Equation (12) describes the theoretical $Y$ factor calculated by General Electric from individual dimensions for the 24 magnetic flowmeters. Tables 8 and 9 compare the experimental $Y$-factor curves as determined at ORNL with the theoretical values for the 3½- and 2-in. units, respectively.

By referring to Table 6, column 9, it may be seen that the experimental value of the $Y$ factor for the 3½-in. units was lower than the theoretical value by maximum differences of from 5.2 to 8.2% for the individual units.

Table 7, column 9, shows that the experimental $Y$ factor for the 2-in. units was lower than the theoretical value by maximum differences of from 4.3 to 6.1% for the individual units.

These percentage differences were calculated at a fluid temperature of 1500°F, the point of greatest difference between the experimental $Y$ factor and the theoretical $Y$ factor.

The spread in $Y$ factors for 12 units as determined theoretically for a fluid temperature of 800°F was 0.6% for both the 3½- and 2-in. units, but experimentally it was 3.1% for the ten 3½-in. units and 2.0% for the ten 2-in. units tested at ORNL.

The theoretical increase in $Y$ factor for a 700°F change in fluid temperature from 800 to 1500°F was 4.7 to 5.1% for the 3½-in. units (Table 8, column 9) and 5.3 to 5.5% for the 2-in. units (Table 9, column 9).

The experimental increase in $Y$ factor for a similar increase in fluid temperature was 3.1 to 3.9% for the 3½-in. units (Table 8, column 10) and 3.6 to 4.1% for the 2-in. units (Table 9, column 10).

The difference in increase of experimental from theoretical determination was 1.0 to 1.9% for the 3½-in. units (Table 8, column 11) and 1.3 to 1.8% for the 2-in. units (Table 9, column 11). The change in $Y$ factor with fluid temperature was experimentally less than the theoretical.

The difference in $Y$ factor may be stated in terms of magnetic flowmeter output sensitivity ($E/Q$ in millivolts per gallon per minute). The sensitivity as experimentally determined was as much as 8.2% higher than the theoretical value for the 3½-in. units and as much as 6.1% higher for the 2-in. units.

The experimental $Y$ factor as determined for the 3½-in. units over the fluid temperature range 400 to 1500°F indicates a drop in output voltage from

the 400°F value of approximately 0.5% per 100°F, and for the 2-in. units approximately 0.6% per 100°F.

The experimental drop in sensitivity with a 700°F fluid temperature rise from 800 to 1500°F was as much as 1.9% less than the theoretical percentage drop for the 3½-in. units and as much as 1.8% less for the 2-in. units.

Summing up, it appears that the theoretical corrections applied to the flowmeter voltage output are too great. The voltage output is higher than predicted, and does not drop as much with fluid temperature increase as theoretically predicted for these units.

Details in the comparison of experimental and theoretical $Y$-factor values are given in Tables 6–9.

## 3.4 PIPE WETTING EFFECTS

### 3.4.1 Wetting Effects upon Initial Operation

Some data were obtained as to wetting effects on the lot No. 2, 2-in. magnetic flowmeters, but the data obtained on the 3½-in. flowmeters and on the initial lot No. 1, 2-in. flowmeters were irregular due to startup troubles in the loop. However, it may be said that complete wetting appeared to occur in all cases with the attainment of fluid temperatures of over 600°F.

Some general observations may be drawn from the initial operation period on the calibration loops as to wetting effects but may not be taken as conclusive, for a number of reasons: (1) The loop was always started at a relatively high oxide level and at low temperature and the effects of the oxide precipitating out on the pipe walls are uncertain; (2) a great deal of the initial data were inconclusive because of startup difficulties; (3) the initial degree of contamination of magnetic flowmeter pipe walls is uncertain.

However, the initial operation of the units below 600°F was somewhat erratic. The flowmeter output was lower than normal and fluctuated in an unpredictable manner below this temperature. Some of the flowmeters started giving normal indications immediately, but others had low outputs, which increased either gradually or abruptly as the loop was heated. One of the phenomena observed in connection with initial startup was that of the different flow elements on the same flowmeter giving different output flow indications. The elements giving low indications did not change until the loop was heated, and then their output would increase until it was equal to that of the higher element. The higher output of this element would also increase slightly as the other elements cleared up. In every case these effects disappeared before the loop reached fluid temperatures above 600°F and did not reappear when the fluid temperature was taken below 600°F again.

It appears that some type of foreign material, which may be NaK oxide or other contamination present upon installation, is localized over one or more of the flow elements and is removed in some manner as the fluid is heated.

### 3.4.2 Wetting Run on 2-in. Flowmeters – Lot No. 2

For the data obtained on the 2-in. magnetic flowmeters in lot No. 2, the fluid was kept at 400°F, the lowest temperature which could be maintained in the loop by use of the blowers, for 100 hr after startup and was then raised to 500°F for 4 hr. After 1 hr of operation at 600°F, all the flowmeters appeared to be completely wetted. The loop was kept at each temperature until it appeared that change in flow output due to wetting at that temperature had been affected.

The 2-in. magnetic flowmeter reference units FE-1A and FE-2A were operated for 770 hr in lot No. 1; then the loop was opened for the installation of four additional units FE-3A through FE-6A for lot No. 2.

The wetting run on the initial operation of FE-3A through FE-6A and the second operation of FE-1A and FE-2A was started with the fluid at the lowest loop temperature attainable. Initial flow data were recorded after the loop had been operated for 4 min at a fluid temperature of 178°F. The flowmeter output voltages were erratic for five of the flowmeters. The flow indications on the five flowmeters were from 50 to 75% of normal as compared with the venturi flow indication. The three separate flow elements on all the individual flowmeters gave flow indications differing by as much as 6%.

FE-6A of the newly installed flowmeters had an output on one element within 3% of normal, with two elements 0.6% lower than this element after 4 min of operation at 178°F. Within 1½ hr of operation the fluid temperature had reached 400°F, during which period irregular wetting effects were observed and appeared generally as low output voltages and as different output voltages on the

three flowmeter elements. The three elements differed in output by as much as 0.7 mv out of 11.1 mv and the outputs from different flowmeters varied from 10.5 to 20.6 mv.

After approximately 10 min of operation another set of data was taken, at a fluid temperature of 208°F. One element of FE-1A was close to normal in flow indication, but two of the elements gave readings 1 and 2% lower. FE-3A was within 1.5% of normal. The low elements on FE-6A had approached to within 0.2% of the highest element reading. The other three flowmeters gave readings which were as much as 50% low.

FE-1A was cleared up completely, with all three elements reading normally, after about 1 hr of operation at 400°F. FE-2A was approaching normal indication upon reaching 400°F but the three elements still gave slightly different indications. After 1½ hr of operation at 400°F FE-2A was indicating normal flow on all elements. Thus these units which had been previously operated attained normal operation within 1½ hr at 400°F.

FE-5A showed a slow increase in indicated output, with the three elements reading differently throughout the 96 hr of operation at 400°F. After 4 hr of operation at 450°F the output from FE-5A increased abruptly. After 16 hr of operation at 450°F the fluid temperature was increased to 500°F, and FE-5A showed a further increase. After 4 hr of operation at 500°F the temperature was increased to 600°F, and FE-5A output increased still further. After operating for 1 hr at 600°F, FE-5A was giving a normal indication of flow on all elements.

FE-4A was reading approximately 10% low throughout the 400°F period of operation, with the three elements giving slightly different readings. FE-4A cleared completely, giving normal flow indications on all three elements, upon reaching a fluid temperature of 450°F.

FE-6A elements gave slightly different flow indications below 400°F which were approximately 2.5% low. The flow indication was normal when a fluid temperature of 450°F was reached.

FE-3A, which had indicated flow within 1.5% of normal after 10 min of loop operation at fluid temperatures to 208°F, did not give normal flow indication until the fluid temperature reached 600°F.

Summing up, the two flowmeters which had been operated previously attained normal operation very quickly after reaching loop fluid temperatures of 400°F. The four flowmeters which were in their initial operation run attained normal operation in somewhat erratic fashions at temperatures from 450 to 600°F. FE-5A showed a gradual increase in output throughout the wetting run with abrupt increases as the temperature increased. FE-6A indicated within 2.5% of normal immediately, but did not attain normal indication until reaching 450°F. FE-3A showed within 1.5% of normal indication after 10 min of operation, but did not attain normal indication until reaching 600°F. FE-4A started off 10% low and reached normal operation at 450°F. The nonwetted condition appeared to cause differences in the three flow element readings on the same flowmeter.

It appears that wetting occurs quickly at fluid temperatures above 600°F but that operation is unreliable until this fluid temperature is reached. After wetting occurs, the condition is maintained even at the lower temperature.

### 3.5 APPARENT SENSITIVITY CHANGE IN THE 2-in. FE-1 DURING LOT NO. 1 OPERATION

The constant temperature runs as made during lot No. 1 operation showed FE-1 to have an indicated $Y$ factor at 400 and 1500°F of 6300 and 6700 gpm/mv, respectively. This determination of the $Y$ factor may be compared with that obtained in lot No. 2 operation of flowmeter FE-1A shown in Fig. 23 and Table 7. The indicated $Y$ factor is about 10% lower in the lot No. 1 run than in lot No. 2 run. The percentage increase in $Y$ factor with temperature is the same in both cases. The 10% increase in $Y$ factor on the lot No. 2 run corresponds to a drop in output sensitivity.

Upon examination of the data on lot No. 1 it was found that all the parameters appeared normal with the exception of a higher than normal output voltage on FE-1 during the constant temperature runs. In addition, the data obtained on these constant temperature runs for this unit were linear with flow at each fluid temperature of the runs. The same $Y$ factor was obtained for the entire flow range at each temperature within the normal deviation limits as established for the flowmeters. The $Y$-factor values were maintained throughout the constant temperature runs, which covered a period of approximately a month.

The first five constant-flow runs made during the first week following the last constant-temperature run agreed with the constant-temperature

runs, but the three constant-flow runs made during the latter part of the week showed an increase in $Y$ factor of about 3%. Examination of later data showed that the $Y$ factor continued to increase slowly with time in the loop.

To summarize, a higher than normal flow sensitivity was observed on the 2-in. unit initially during the first month of operation. The sensitivity then started dropping gradually. When the loop was operated for lot No. 2, the flowmeter sensitivity agreed with that of the other flowmeters and appeared normal.

It is unknown whether this was a true flowmeter phenomenon, since the low reading of $Y$ factor was accepted as normal during the first run and checks on the data were not made. It may have been due to some error in loop instrumentation, but checks were made on the data and the values indicated were normal except that the output voltage indicated on the unit was higher than that of the other units. A zero shift on the flow recorder would have resulted in an indicated nonlinearity with flow which was not observed on the unit. An increase in sensitivity of the Brown recorder might give similar indications, but a change of this type which corrected itself gradually is hard to visualize.

The indications are that the unit actually had a higher sensitivity in the earlier part of the run than the other units and that some gradual change in the flowmeter occurred to reduce the sensitivity to normal. The phenomenon was not observed on any other flowmeters, and the unit behaved quite normally during the lot No. 2 calibration run.

The cause of the higher than normal sensitivity and the factors causing the drop to normal are unknown. No explanation has been found for this behavior which will fit all the circumstances.

### 3.6 OPERATION AT MAGNET TEMPERATURES TO 700°F

Magnet temperatures as high as 305°F were attained in the normal loop operation. In addition to the data at normal magnet temperatures, flow data were recorded on data sheets during the magnet temperature runs. Time did not permit complete analysis of all these data, but they were checked for the 3½-in. flowmeters of lot No. 2.

The output voltages as indicated by the six flowmeters while enclosed and heated to magnet temperatures from 305 to 700°F and while cooling to normal temperatures upon removal of the insulating blankets were corrected to flow by use of the experimental $Y$ factor and air gap flux density curves of Figs. 20 and 22.

It was found that the experimental curves agreed with data taken at magnet temperatures of 305 to 700°F during magnet heating and cooling to within 1% or better for the four flowmeters FE-1A, FE-2A, FE-3A, and FE-6A.

FE-4A indicated flows which were as much as 1.8% low when the magnet was cooling during flux density determinations but which agreed during magnet heating. The air gap flux density drop with increasing magnet temperature (Fig. 20) as determined on this run being less than the mean drop by about 1% (Table 3, column 10) and the $Y$-factor curve (Fig. 22) showing a greater increase with fluid temperature than the mean increase by about 1% (Table 6, column 8) may indicate that the determination of flux density during this cooling run is high at the high magnet temperatures by perhaps 1%. An error in flux density vs magnet temperature in the direction indicated would result in the observed increase in $Y$ factor at high fluid temperature since higher magnet temperatures corresponded to the higher fluid temperatures. If the flux density were measured higher than the actual value at the higher magnet temperatures, the experimental $Y$ factor based on these flux densities would be high at the higher temperatures. This is a possible explanation of the flow errors of as much as 1.8% at the higher magnet temperatures during the cooling run. On FE-5A flow indications at higher magnet temperatures agreed within 1% during magnet cooling, but were as much as 1.5% high during heating runs. It is to be noted that the flux density vs temperature curve on this flowmeter agrees with the mean, but that the $Y$-factor curve shows a rate of increase with fluid temperature similar to that of FE-4A.

Although normal magnet temperatures are expected to be below 300°F, the extended magnet temperature runs act as a rough check on the $Y$-factor curves and the air gap flux density curves by allowing the effects of a greater than normal change in the magnet temperature on flow output to be observed.

According to the extended magnet temperature runs the curves fit well, even at the extended magnet temperature ranges, for four of the flowmeters tested. Flowmeters FE-4A and FE-5A may require adjustment in the curves if they are to be operated in the extended magnet temperature range or if major flux changes occur. The $Y$-factor curve as given in Fig. 22 will give correct flow values at normal magnet temperatures if the flux density curve of Fig. 20 is used.

# 4. CONCLUSIONS AND RECOMMENDATIONS

## 4.1 CALIBRATION

Ten $3\frac{1}{2}$- and ten 2-in. units were calibrated against a venturi water-calibrated to an accuracy of 0.25%, over periods of operation to 3000 hr. The $Y$-factor and air gap flux density curves obtained from the calibration are shown in Figs. 20–23. These curves may be used to interpret flow output voltage for the individual units by use of Eq. (12). The flow is given in gallons per minute over the range of flow and temperature of the tests (Sec 2.3.2) in terms of actual calibration against the venturi. Although the test did not cover fluid temperatures below 400°F or above 1500°F, the $Y$-factor curves may be extrapolated to cover the range of fluid temperature from 70 to 1600°F. The flow range as actually covered by the test may be extrapolated to cover the range from zero flow to the upper flow range of the test. Extrapolation of the output voltages shows that the curve passes through zero output for zero flow, indicating that the output voltage is linear with flow over this entire range.

Better than 1% accuracy may be expected from the calibrated units over the flow and temperature ranges of the test by using the curves of Figs. 20–23 with Eq. (12) provided that the air gap flux density is measured before operation and agrees with that of Fig. 20 or 21.

Although a change in flux density is not expected, since the flux stability was excellent throughout as much as 3000 hr of operation (after the initial aging period prior to operation), the long-term stability has not been definitely established and it is possible that aging or rough handling could result in flux changes.

In the event that flux changes less than 2% occur the curve of Fig. 20 or 21 which applies to the unit may be adjusted to pass through the point measured, maintaining the same flux density to magnet temperature slope.

For a flux change greater than 2% it is recommended that the curve be repeated by taking several flux readings over as wide a temperature range as possible, either by use of an oven or, preferably, while the unit is in service at operating temperatures.

Monitoring of flux from time to time during operation is desirable as a precautionary measure but is not essential.

### 4.1.1 Linearity

The linearity of the flow output vs flow for the 2- and $3\frac{1}{2}$-in. units over the range of the tests was better than 1%. Since the flow curves passed through zero output for zero flow when extrapolated, it is felt that the linearity is better than 1% from zero flow to the maximum flow attained in the tests.

### 4.1.2 Reproducibility

The reproducibility of the flow output over the range of flow and temperatures of the tests was better than 1%.

## 4.2 COMPARISON OF EXPERIMENTAL RESULTS WITH THEORETICAL CALCULATIONS

Comparison of the experimental with the theoretical $Y$ factor is made in detail in Sec 3.3.4, and the data are tabulated in Tables 6–9.

This comparison shows that the experimentally derived fluid temperature corrections to flowmeter sensitivity as obtained on the calibration loops are less than those predicted by the theoretical considerations. The theoretical values of flow sensitivity are based on substituting values of the flowmeter parameters and fluid parameters for the individual units into Eq. (11) to obtain the $Y$ factor (see Appendix).

Comparison of the experimental with the theoretical values of $Y$ factor indicates that flow measurements based on the theoretical sensitivity could be in error at 1500°F fluid temperature by as much as 8% of flow for the $3\frac{1}{2}$-in. units and by as much as 6% of flow for the 2-in. units. The flow output obtained by using the theoretical sensitivity would be higher than the actual flow.

The percentage drop in sensitivity due to increase in fluid temperature is less than that theoretically predicted. The difference in drop between 800 and 1500°F approached 2% for both sizes of units.

Gray (3) compared experimental with theoretical results, using a weigh tank on 1-in. magnetic flowmeters of type 347 stainless steel measuring sodium flow to the 700°F range, and noted that the temperature effects were not as great as predicted. The difference was attributed to the error involved in assuming the pipe wall temperature to be the same as the fluid temperature.

Carroll (8) of ORNL found differences between experimental and theoretical values in using type 316 stainless steel and Inconel flowmeters of less than ¼-in. size to measure sodium flow of as great as 3.9% in the opposite direction. This comparison also used a weigh tank as a flow standard. The data were taken at 418°F. No change in calibration was noted to 1472°F.

It is felt that the results of these experiments as well as the ORNL calibration indicate that flow measurements based entirely on theoretical considerations should not be relied upon to produce accuracies of better than 8%.

Although the calibration on both 2- and 3½-in. flowmeters indicates differences in the same direction between theoretical and experimental sensitivity, no definite conclusions may be drawn as to the origin of the differences. The experiments were limited to the use of differences in the fixed parameters of the two flowmeter sizes to separate the factors which might have caused the discrepancy between theory and practice. The differences between experimental and theoretical values are well established and defined by the experiments, but may have arisen from a variety of factors.

It is felt that the differences between theoretical and experimental sensitivity indicate that either a reappraisal of the theoretical criteria or a better means of applying them is necessary before high-accuracy theoretical prediction of output for magnetic flowmeters is practical.

The units show promise as high-accuracy units, since the output is highly reproducible and linear over a wide range of temperature and flow. It is suggested that the work be continued at least to the extent that the calibrated units be used whenever possible in other applications in comparison with flow standards with different pipe materials and fluids, and at the lower temperatures and flows. If the data from these applications are added to the results of the experiments to date it would be possible to effectively vary the parameters to observe their effect on flow output. In this manner it might be possible to ascertain the origin of the observed differences between experimental and theoretical.

### 4.3 EFFECTS OF TEMPERATURE AND HANDLING

No irreversible effects due to temperature and handling other than those listed in Sec 3.1 were observed. These effects are minor and may be corrected by design changes as indicated. It is stressed, however, that every effort was made to minimize handling and to follow recommended procedures in installation and operation of the units. The handling and installation procedure outlined in the Appendix must be strictly adhered to as a necessity in obtaining high accuracy results.

The temperature cycling of the magnets produced no irreversible change in measured flux density.

The fluid temperature cycling produced no irreversible change in measured $Y$ factor.

### 4.4 LONG-TERM RELIABILITY

The determination and maintenance of a known flux density in the region of the signal electrodes shows up as the major practical problem in the use of magnetic flowmeters for extended periods.

If the flux density as established before shipment of the units to ORNL had been used as a basis for flow measurement, errors would have resulted approaching 7% of flow for the 3½-in. units and 3% of flow for the 2-in. units due to drop in air gap flux density.

Details on flux density stability are given in Secs 3.2.2 and 3.2.3.

The flux drops occurred erratically within five months following magnetization. The mean total flux drop amounted to 5.5% for the ten 3½-in. units and 1.9% for the ten 2-in. units, with a mean deviation of 0.5% between units. The magnets then appeared to have attained a stable condition after these drops had occurred. The stable condition was attained before the units were operated. Operation of the units included repeated thermal cycling, vibration, and varying flow conditions for operational periods of as much as 3000 hr covering periods as long as ten months. Operation in the loop produced no irreversible flux density change in the units.

The erratic drops which occurred during the early life of the magnets may indicate that the magnet stabilization procedure as specified was either inadequate or not properly applied to the units. It appears that modification of the stabilization procedure may be required which will ensure the stable flux condition before operation of the units, if flow accuracy is to be based upon determination of flux density prior to operation. It is to be noted that in reactor use the flowmeters are usually inaccessible during operation. With the

present stabilization procedure it is not sufficient to base flow accuracy on flux measurements made prior to operation unless the flux density was observed to have been stable for several months prior to operation, indicating that the initial flux drops have occurred.

It would appear that a proper stabilization procedure could be designed after which the magnets should be very stable, since, after the initial period of erratic flux drops, it was found that operation of the flowmeters did not cause further drops.

Assuming that the stable flux condition has been attained, corrections for flux change due to magnet temperature may be applied which amount to 0.015% of room temperature flux per °F rise in magnet temperature. The error incurred in using this value as typical should not exceed 1% for magnet temperatures up to 300°F for the Alnico V used in these units. If greater accuracy is desired, the flux density vs magnet temperature curve must be determined experimentally for each flowmeter. The present stabilization procedure calls for thermal cycling of the flowmeters until a reproducible flux density vs magnet temperature curve is obtained. If this procedure is followed, the final flux density vs magnet temperature curve may be used. This curve may be assumed to hold if the stable condition had been attained at the time that the curves were run. Mechanical shock procedures should precede the thermal cycling. It is to be noted that the flux drops due to magnet temperature drops of 500°F as determined by ORNL differed from those determined initially by General Electric by as much as 2.5%. This was on units which had shown as much as 7% flux drop following the General Electric determination.

After proper stabilization and aging of the magnets, as described in Secs 3.2.2 and 3.2.3, it should be possible to rely upon the flux stability of the units for periods of operation in excess of 3000 hr.

It is recommended that the monitoring of flux density on the units which have been calibrated be continued at intervals over as long a period as practical to determine whether any further flux drops occur in time.

A simple, reliable means of continuously monitoring flux density for the flow equation would be highly desirable. It would remove all the uncertainties in depending upon long-term flux stability and would remove necessity for strict handling procedures. Even though the flux density were stable during operation for 20 flowmeters, there is always some possibility of a change occurring which will go undetected. Even a monitoring device which would show only a change in flux density would improve the long-term reliability in the sense of guarding against an occasional deviation in flux density. A Hall effect device would be indicated for simplicity.

Another alternative to flux density monitoring for high accuracy would be to operate the units in pairs so that changes in flux might be observed, by observing different flow indications.

In summing up flux density effects, it should be possible to design units and to use standard flux corrections for magnet temperature and base the flow accuracy on flux stability, but great care must be taken to assure that the stable condition has been attained.

### 4.5 WETTING OF PIPE WALLS

Complete wetting occurs within a few minutes at fluid temperatures above 600°F (Secs 3.4.1 and 3.4.2). Nonwetting effects resulting in inaccuracy may be present until that temperature has been attained. After the 600°F temperature is initially attained, the pipe will remain wetted to room temperature.

It is recommended that the fluid be initially preheated in the flow pipe to 600°F or above, preferably under flow conditions for 1 or 2 hr to ensure wetting. If initial accuracy of flow measurement is not required, the flowmeter may be operated normally at temperature above 600°F for 2 hr, after which time wetting should be complete and high accuracy attainable.

A practical indication of nonwetting is a difference in the indications from the three flow elements.

## BIBLIOGRAPHY


(1) *Permanent Magnet Materials and Their Selection*, Indiana Permanent Magnet Manual Number 5, Indiana Steel Products Co., Valparaiso, Ind.

(2) W. C. Gray and E. R. Astley, "Liquid Metal Magnetic Flowmeters," *ISA Journal* **1**, 15–23 (June 1954).

(3) W. C. Gray, *Magnetic Flowmeter Calibration Results*, KAPL-613 (Oct. 3, 1951).

(4) E. R. Astley, *Magnetic Flowmeter Output Potentials*, R-52-GL-42 (Mar. 1, 1952).

(5) H. G. Elrod, Jr., and R. R. Fouse, "An Investigation of Electromagnetic Flowmeters," *Trans. Am. Soc. Mech. Engrs.* **74**, 589–94 (1952).

(6) C. B. Jackson (ed.), *Liquid Metals Handbook. Sodium-NaK Supplement*, TID-5277 (July 1, 1955).

(7) ORNL CF-55-3-145 (classified).

(8) R. M. Carroll, *A Simple Electromagnetic Flowmeter for Liquid Metals*, ORNL-1461 (Feb. 13, 1953).

(9) J. A. Shercliff, *The Theory of the D.C. Electromagnetic Flowmeter for Liquid Metals*, AERE X/R-1052 (2d issue).

(10) W. Murgatroyd, *The Model Testing of Electromagnetic Flowmeters*, AERE X/R-1053 (October 1952).

## APPENDIX*

1. ORNL Spec. 4998-10, Rev. 1, dated April 18, 1956, *2″ Magnetic Flowmeter*
2. ORNL Spec. 4998-12, dated April 20, 1956, *General Specifications – Magnetic Flowmeters*
3. ORNL Spec. 4998-2, Rev. 1, dated April 23, 1956, *3½″ Magnetic Flowmeter*
4. ORNL Spec. 4998-12, dated May 2, 1956, *General Specifications – Magnetic Flowmeters*
5. G.E. Drawing – 655C109, *2″ Magnetic Flowmeter – Magnet Assembly*
6. G.E. Drawing – 655C108, *3½″ Magnetic Flowmeter – Magnet Assembly*
7. PKA-2 Nozzle Type Venturi Tube Calculations
8. PKP-2 Nozzle Type Venturi Tube Calculations
9. Electrical Resistivity of Inconel
10. Nomograph To Find $Q$, Knowing $T_m$, $T_f$, and $E$

*Comprised of exact duplications of material submitted.

OAK RIDGE NATIONAL LABORATORY
Operated by
UNION CARBIDE NUCLEAR COMPANY
A Division of Union Carbide and Carbon Company
Post Office Box X
Oak Ridge, Tenn.

ORNL SPEC. 4998-10, Rev. 1
April 18, 1956

# 2" MAGNETIC FLOWMETER

## SCOPE

Magnetic flowmeter assembly consists of a permanent magnet assembly, a flow pipe or tube section and mounting brackets suitable for attaching to the pipe at one point but with provision for assembly support external to the pipe.

## SPECIFICATIONS

1. Flowmeter Size - 2" (For 2" IPS Sch. 40 Inconel Pipe).
2. Accuracy - 1% for 3000 hours at flow rates from 45 gpm to 200 gpm. 5% from 200 gpm to 600 gpm.
3. Media - NaK - 56% Na, 44% K (by weight).
4. Flow Rate - Maximum 600 gpm; Minimum - 45 gpm; Normal - 300 gpm.
5. Fluid Temperature - Maximum - 1600 deg. F; Minimum - 750 deg. F.; Normal - 1200 deg. F.
6. Ambient Temperature - Maximum - 560 deg. F.; Minimum - 100 deg. F.; Normal - 350 deg. F.
7. Signal Output - 15 gpm/mv minimum.

NOTE: Buyer shall supply 36" of 2" IPS Sch-40 Inconel pipe for each flowmeter.

Prepared by: /s/ G. H. Burger
G. H. Burger

Approved by: /s/ R. G. Affel
R. G. Affel

GENERAL SPECIFICATIONS - MAGNETIC FLOWMETERS

1. The magnet mounting brackets, clamps, angles, screws, bolts, etc., shall be of a stainless steel having a maximum relative magnetic permeability of 2.

2. The flowmeter mounting assembly shall be supplied with eyes, hooks, or other devices suitable for attaching the assembly to a counter balancing system when the flowmeter is mounted in a horizontal position. The magnets shall be attached in such a manner that they can be demounted from the assembly for flux density measurements during operation.

3. The permanent magnets shall be of Alnico-V. The magnet pole faces shall be at least three magnet air gaps in length and have a total height of at least 1/4" more than the pipe O.D.

4. The magnet assembly shall be completely assembled with all bolts, clamps, and brackets in place before magnetizing the magnets. Magnetically saturate the magnets then demagnetize to 5% below the saturation point. Repeat procedure until a repeatable stable minor loop of 1/2% is attained. Subject the magnet assembly to several 10 g shocks or until the flux density does not change by more than 1%. Thermally stabilize magnets at 450 deg. C. by heating the magnet to 450 deg. C., then cooling to room temperature. Repeat this procedure at least three times or as many more times as necessary in order to get retraceable curves of flux density versus temperature.

5. Three chromel P-alumel thermocouples of at least 20 ga. wire shall be attached to the magnet suitable for determining magnet ambient temperature. The thermocouple leads shall be a minimum of 2 feet in length, insulated with ceramic beads and supplied with Thermo-Electric Co. type PMESS plugs and type JMESS jacks. The thermocouples shall be numbered for identification.

6. Vendor shall supply temperature versus flux density curves covering the ambient operating temperature ranges of the magnet.

7. A minimum of three pairs of signal leads shall be provided. Each pair of leads shall terminate in a suitable high temperature connector fitting which will withstand the maximum ambient temperature of the assembly. The cable fittings and matching cable connectors shall be supplied by the vendor. The signal leads shall be of Inconel wire - .060" to .070" diameter, supplied by the buyer and shall be attached to the pipe by the inert-gas-shielded tungsten arc welding process (D.C.). A sufficient amount of inert back-up gas shall be flowed thru the pipe during welding, in order to prevent oxidation in the pipe. All welding shall be dye penetrant inspected. The appearance of dye is cause for rejection and therefore the weld should be repaired or the flow pipe replaced. The inside surface of the pipe shall be visually inspected for oxidation or fused metal. The presence of either may be cause for rejection.

8. Three calibrated test coils to measure the flux density between the magnet pole faces shall be supplied by vendor with each size group of flowmeters. The test coils shall be similar to those used by the vendor to check magnet flux density. The coils shall be of such size and shape to measure the effective flux density used to compute the flowmeter output per the equations supplied by the vendor. The vendor shall provide a fixture for each test coil in order to locate precisely the coil starting position when measuring flux density. The vendor shall supply sufficient instructions to enable the correct flux density measurement to be made; this includes the test coil dimensions and method of using test coil. The test coils supplied to the buyer shall be checked against the vendors standard coil and correction factors furnished if needed.

9. The vendor shall supply with each flowmeter a suitable positioning jig for a leakage flux coil. The leakage flux coil will be used to determine the magnet flux density of the flowmeter while in operation. The vendor shall supply sufficient data to correlate the leakage flux with the magnet flux density. The vendor shall supply all necessary information to insure the correct magnet flux density measurement using the leakage flux coil. Three similar leakage flux coils shall be supplied with each size group of flowmeters.

10. The vendor shall supply suitable graphs for determining flow for different fluid operating temperatures, pipe temperatures and for different magnet ambient operating temperatures. The vendor also shall supply all measuring, installation, and operating information needed to insure that the flowmeters will operate within the specified accuracies.

11. Vendor shall supply writer a written progress report every two weeks outlining status of units.

12. All shop drawings shall be approved by buyer before beginning flowmeter fabrication.

Prepared by: /s/ G. H. Burger
G. H. Burger

Approved by: /s/ R. G. Affel
R. G. Affel

OAK RIDGE NATIONAL LABORATORY
Operated by
UNION CARBIDE NUCLEAR COMPANY
A Division of Union Carbide and Carbon Corp.
Post Office Box "X"
Oak Ridge, Tenn.

ORNL SPEC. 4998-2-Rev. 1
April 23, 1956

# 3 1/2" MAGNETIC FLOWMETER

## SCOPE

Magnetic flowmeter assembly consists of a permanent magnet assembly, a flow pipe or tube section and mounting brackets suitable for attaching to the pipe at one point but with provision for assembly support external to the pipe.

## SPECIFICATIONS

1. Flowmeter Size - 3 1/2" (For 3 1/2" sch. 40 pipe).
2. Accuracy - 3 1/2% for 3000 hours.
3. Flow Rate - Maximum 1400 gpm; Minimum 45 gpm; Normal 1200 gpm.
4. Fluid Temperature - Maximum - 1600 deg. F.; Minimum 750 deg. F.; Normal - 1300 deg. F.
5. Media - NaK - 56% Na, 44% K (by weight).
6. Ambient Temperature - Maximum - 560 deg. F.; Minimum 100 deg. F.; Normal - 350 deg. F.
7. Signal Output - 35 gpm/mv.

NOTE: Buyer shall supply 48" of 3 1/2" sch. 40 Inconel pipe for each flowmeter.

Prepared by: /s/ G. H. Burger
G. H. Burger

Approved by: /s/ R. G. Affel
R. G. Affel

## GENERAL SPECIFICATIONS - MAGNETIC FLOWMETERS

1. The magnet mounting brackets, clamps, angles, screws, bolts, etc., shall be of a stainless steel having a maximum relative magnetic permeability of 2.

2. The flowmeter mounting assembly shall be supplied with eyes, hooks, or other devices suitable for attaching the assembly to a counter balancing system when the flowmeter is mounted in a horizontal position. The magnets shall be attached in such a manner that they can be demounted from the assembly for flux density measurements during operation.

3. The permanent magnets shall be of Alnico-V. The magnet pole faces shall be at least three magnet air gaps in length and have a total height of at least 1/4" more than the pipe O.D.

4. The magnet assembly shall be completely assembled with all bolts, clamps, and brackets in place before magnetizing the magnets. Magnetically saturate the magnets then demagnetize to 5% below the saturation point. Repeat procedure until a repeatable stable minor loop of 1/2% is attained. Subject the magnet assembly to several 10 g shocks or until the flux density does not change by more than 1%. Thermally stabilize magnets at 450 deg. C. by heating the magnet to 450 deg. C., then cooling to room temperature. Repeat this procedure at least three times or as many more times as necessary in order to get retraceable curves of flux density versus temperature.

5. Three chromel P-alumel thermocouples of at least 20 ga. wire shall be attached to the magnet suitable for determining magnet ambient temperature. The thermocouple leads shall be a minimum of 2 feet in length, insulated with ceramic beads and supplied with Thermo-Electric Co. type PMESS plugs and type JMESS jacks. The thermocouples shall be numbered for identification.

6. Vendor shall supply temperature versus flux density curves covering the ambient operating temperature ranges of the magnet.

7. A minimum of three pairs of signal leads shall be provided. Each pair of leads shall terminate in a suitable high temperature connector fitting which will withstand the maximum ambient temperature of the assembly. The cable fittings and matching cable connectors shall be supplied by the vendor. The signal leads shall be of Inconel wire - .060" to .070" diameter, supplied by the buyer and shall be attached to the pipe by the inert-gas-shielded tungsten arc welding process (D.C.). A sufficient amount of inert back-up gas shall be flowed thru the pipe during welding, in order to prevent oxidation in the pipe. All welding shall be dye penetrant inspected. The appearance of dye is cause for rejection and therefore the weld should be repaired or the flow pipe replaced. The inside surface of the pipe shall be visually inspected for oxidation or fused metal. The presence of either may be cause for rejection.

8. Three calibrated test coils to measure the flux density between the magnet pole faces shall be supplied by vendor with each size group of flowmeters. The test coils shall be similar to those used by the vendor to check magnet flux density. The coils shall be of such size and shape to measure the effective flux density used to compute the flowmeter output per the equations supplied by the vendor. The vendor shall provide a fixture for each test coil in order to locate precisely the coil starting position when measuring flux density. The vendor shall supply sufficient instructions to enable the correct flux density measurement to be made; this includes the test coil dimensions and method of using test coil. The test coils supplied to the buyer shall be checked against the vendors standard coil and correction factors furnished if needed.

9. The vendor shall supply with each flowmeter a suitable positioning jig for a leakage flux coil. The leakage flux coil will be used to determine the magnet flux density of the flowmeter while in operation. The vendor shall supply sufficient data to correlate the leakage flux with the magnet flux density. The vendor shall supply all necessary information to insure the correct magnet flux density measurement using the leakage flux coil. Three similar leakage flux coils shall be supplied with each size group of flowmeters.

10. The vendor shall supply suitable graphs for determining flow for different fluid operating temperatures, pipe temperatures and for different magnet ambient operating temperatures. The vendor also shall supply all measuring, installation, and operating information needed to insure that the flowmeters will operate within the specified accuracies.

11. Vendor shall supply writer a written progress report every two weeks outlining status of units.

12. All shop drawings shall be approved by buyer before beginning flowmeter fabrication.

Prepared by: /s/ G. H. Burger
G. H. Burger

Approved by: /s/ R. G. Affel
R. G. Affel

GENERAL ELECTRIC

G55C109

UNLESS OTHERWISE SPECIFIED USE THE FOLLOWING:—

| APPLIED PRACTICES | SURFACES | TOLERANCES ON MACHINED DIMENSIONS: FRACTIONS | DECIMALS | ANGLES |
|---|---|---|---|---|
| | ✓ | ± | ± | ± |

TITLE OUTLINE MAGNETIC FLOWMETER

FIRST MADE FOR 2" HIGH TEMP CAT. 173D623G1

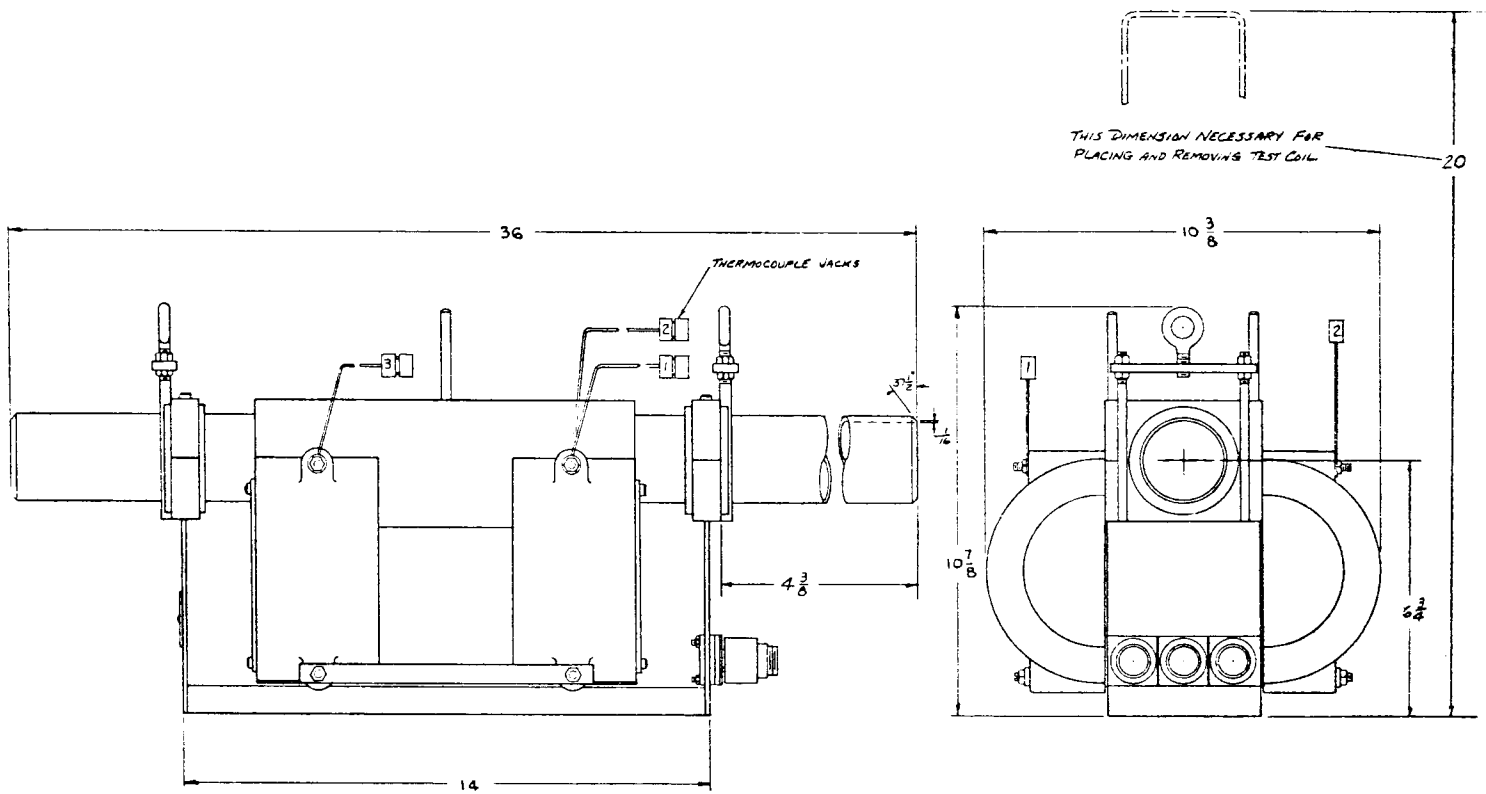


NOTE: DO NOT STORE, MOUNT, OR PLACE FLOWMETER WITHIN ONE FOOT OF MAGNETIC MATERIAL SUCH AS NAILS, TOOLS, STRUCTURAL IRON AND STEEL, OR OTHER MAGNETIC DEVICES. THE ACCURACY OF CALIBRATION MAY BE IMPAIRED BY CONTACT OR PROXIMITY WITH SUCH MATERIAL.

G55C109

REV NO.

REVISIONS

PRINTS TO

MADE BY C. Carter Oct 24, 1956

NOV. 16, 1956

APPROVED RZL 11-16-56

A. P. E.

SAN JOSE, CAL.

G55C109

GENERAL ELECTRIC

655C108

UNLESS OTHERWISE SPECIFIED USE THE FOLLOWING:—

| APPLIED PRACTICES | SURFACES | TOLERANCES OR MACHINED DIMENSIONS: FRACTIONS | DECIMALS | ANGLES |
|---|---|---|---|---|
| | ✓ | ± | ± | ± |

TITLE OUTLINE
MAGNETIC FLOWMETER
FIRST MADE FOR 3½" SPECIAL HIGH TEMP. CAT. 173D6376G1

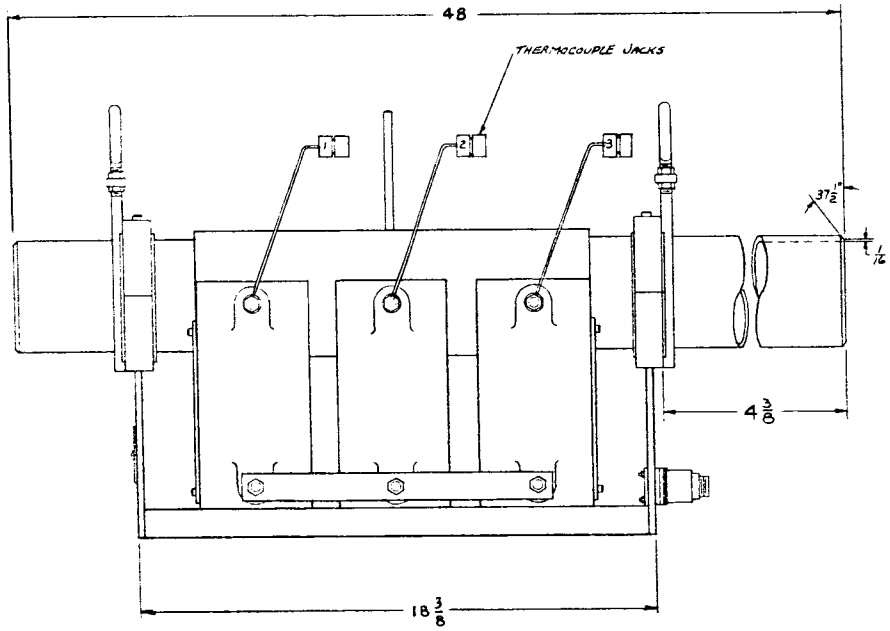


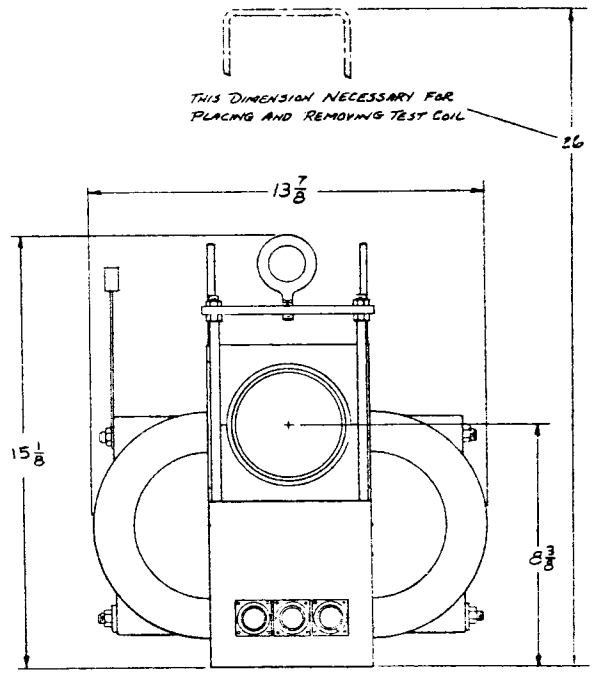


NOTE: DO NOT STORE, MOUNT, OR PLACE FLOWMETER WITHIN ONE FOOT OF MAGNETIC MATERIAL SUCH AS NAILS, TOOLS, STRUCTURAL IRON AND STEEL, OR OTHER MAGNETIC DEVICES. THE ACCURACY OF CALIBRATION MAY BE IMPAIRED BY CONTACT OR PROXIMITY WITH SUCH MATERIAL.

DRAWING NO. 655C108

REV NO.

REVISIONS | PRINTS TO

MADE BY C. Carter Oct. 22, 1956 — NOV. 16, 1956
APPROVED R.T.L. 11-16-56
A. P. E. — SAN JOSE, CAL.
655C108

5-9-57
H. J. Metz

PK-A-2 NOZZLE-TYPE VENTURI-TUBE CALCULATIONS
Ser. No. 31278

Basis - Throat Diameter - 2.185 in.
Tube Diameter - 4.022 in. $\beta = 0.54326$
Coefficient of discharge - 1.000 when Rd $1.5 \times 10^5$
Flowing Temperature - 1400F.
Units - Gallons per minute at flowing conditions
Pounds per square inch differential pressure

| Temp F | Density* Lb/Ft.$^3$ | Specific Gravity | $A_1$ SG | Viscosity Centipoises | Temperature** Multiplier (TM) |
|---|---|---|---|---|---|
| 600 | 52.0 | .834 | .913 | .26 | .9224 |
| 800 | 50.3 | .807 | .898 | .21 | .9411 |
| 1000 | 48.7 | .781 | .884 | .19 | .9608 |
| 1200 | 47.1 | .756 | .870 | .17 | .9802 |
| 1400 | 45.5 | .730 | .854 | .16 | 1.0000 |
| 1500 | 44.6 | .715 | .846 | .16 | 1.0130 |
| 1600 | 43.2 | .693 | .832 | .16 | 1.0247 |

*Design Data ** Flow Calc. Binder - $\frac{A_2}{A_1} \times \frac{Fe_2}{Fe_1} \times \frac{Gb_1}{Gb_2}$

Taps - Pipe and Throat
Calculations

$V = SMD^2ABFeFcFp \quad h \quad Gb$ Spink-page 95**

$M_2 = 5.453$ Page 30 ** Gb = Specific gravity
$D^2 = 4.022^2 = 16.1765$ A = Above table
$B = 1.039$ Page 4 **
$Fe = (1 + 0.00000896 \times 1340)^2 = 1.025$
$Fp = 1.000$ Page 5 **
$Fc = 1.000$
h = Delta P in in. of water

$E = C / \sqrt{1-B^4} = 1.000 / \sqrt{1-.5433^4} = 1.000 / .95546 = 1.0466$

$S = EX\beta^2 = 1.0466 \times .5433^2 = 1.0466 \times .29513 = 0.30888$

$V = .30888 \times 5.453 \times 16.177 \times .854 \times 1.039 \times 1.025 \times \sqrt{h} / .730$
$V = 33.947 \times \sqrt{h}$
$V = 33.947 \times 5.27 \times \sqrt{h_{psi}} = \underline{178.90 \sqrt{h_{psi}} \times TM}$

Use of differential pressure indicators. 0-10 square root scale
Range = 0-500 in. water or 0-18.06 psi

$Vm = 178.90 \times \sqrt{18.06} \times TM = 178.90 \times 4.2497 \times TM = 760.3 \times TM$
$V = 764.1/10 \times TM \times \text{scale reading} = \underline{76.03 \times TM \times \text{scale}}$

* Design Data - CF-DDS-55-3-145
** "Principles and Practice of Flow Meter Engineering" by L. K. Spink

1-15-58
H. J. Metz

## PK-2-2 NOZZLE-TYPE VENTURI-TUBE CALCULATION

Basis - Throat Diameter - 2.5995 in.
Tube Diameter - 4.020 in.
Coefficient of Disc. - 1.00 above 200 GPM $\beta = 0.6466$
(BPI curve serial 31277)
Flowing temperature - 1400°F.
Units - Gallons per minute at flow conditions
Pounds per square inch differential pressure = $h_{psi}$

| Temp. F. | Density* Lb/Ft.$^3$ | Specific Gravity | $A_1\sqrt{SG}$ | Viscosity* Centipoises | Temp.** Multipliers (TM) |
|---|---|---|---|---|---|
| 600 | 52.0 | 0.834 | 0.913 | 0.26 | 0.9224 |
| 800 | 50.3 | .807 | .890 | 0.21 | 0.9411 |
| 1000 | 48.7 | .781 | .884 | 0.19 | 0.9608 |
| 1200 | 47.1 | .756 | .870 | 0.17 | 0.9802 |
| 1400 | 45.5 | .730 | .854 | 0.16 | 1.0000 |
| 1500 | 44.6 | .715 | .846 | 0.16 | 1.013 |
| 1600 | 43.2 | .693 | .832 | 0.16 | 1.0247 |

*Design Data ** Flow Calc. Binder, $\frac{A_2}{A_1} \times \frac{Fe_2}{Fe_1} \times \frac{Gb_1}{Gb_2}$
Taps - Pipe and Throat

Calculation

$$V = SMD^2ABFeFcFp\sqrt{h}\Big/Gb$$ Spink - Page 95**

M = 5.453 Page 30 **
D = $4.020^2$ = 16.16 Gb = Specific Gravity
B = 1.039 Page 4 ** A = Above table
Fe = (1 + 0.00000896 x 1340) = 1.025
Fp = 1.000 Page 5 **
Fc = 1.000
h = Delta P in in. water

$$E = C\Big/\sqrt{1-\beta^4} = 1.00\Big/\sqrt{-.6466} = 1.00\Big/.90841 = 1.10082$$

$$S = E\Big/\beta^2 = 1.10082 \times .6466^2 = 0.46024$$

$$V = 0.46024 \times 5.453 \times 16.16 \times \frac{.854}{50.53\sqrt{h}} \times 1.039 \times 1.025 \times \sqrt{h}\Big/.730 =$$

$$V = 50.53 \times 5.271 \times \sqrt{h_{psi}} = 266.34\sqrt{h_{psi}} \times TM$$

$h_{psi}$ = Delta P in pounds per square inch

Assume 50 psi Delta P, Temperature is 1400F.
V = 266.34 x 7.072 = 1884 GPM at 1400F.

Assume 25 psi Delta P, Temperature is 1000F.
V = 266.34 x 5 x .9608 = 1279.5 GPM at 1200F.

C is between .9975 and 1.000 when flow is larger than 40 GPM at 1400F.

* Design Data - CF-DDS-55-3-145
** "Principles and Practice of Flow Meter Engineering" by L. K. Spink

## ELECTRICAL RESISTIVITY OF INCONEL

The accompanying graph shows the results of tests on 5 heats of Inconel. Judging from the spread in values found for commercially-produced Nichrome V, (which behaves in a manner similar to Inconel) these curves are probably typical. In Nichrome V the normal tolerance on resistivity at room temperature is ± 8%; even special orders are not normally produced to closer than ± 5%.

There are several unusual aspects concerning the resistivity of these alloys. With a given starting material, the resistivity will be approximately linear with temperature from room temperature to about 800°F. On cooling, the resistivity will return to the original value. If, however, the metal is allowed to be exposed to temperatures between 800 and 950°F. for long periods (hours to days), the resistivity will increase with time. Upon recooling to room temperature it will be found that the resistivity has increased as much as 5% (see graph), but the temperature coefficient of resistivity will not be greatly altered. Similarly, on cooling from above 950°F., the rate of cooling (really the time spent in the temperature range 800 to 900°F.) will influence the room temperature resistivity.

To keep the room temperature resistivity constant (or to reproduce it after temperature cycling) one must either - (1) stay below 800°F., or (2) heat above about 1000°F. and cool at the same rate each time.

Above about 950°F., the effect of prior history is essentially erased and the resistivity of a given metal from 950 to 1600°F will not depend upon the thermal treatment.

The 800 to 950°F range is rather awkward in that one does not know the resistivity accurately without measurement, and the time a metal spends in the temperature range can, as mentioned above, influence the resistivity at lower temperatures.

Thus the only sure reference points on the resistivity temperature curves are in the region from 950 to 1000°F. on up. The resistivity at lower temperatures depends upon the fabrication history or the cooling history unless this is erased by heating to 1000°F. and cooling in a care-fully-controlled reproducible manner.

See Figure 16 - Page 69.

UNCLASSIFIED
ORNL-LR-DWG 44411

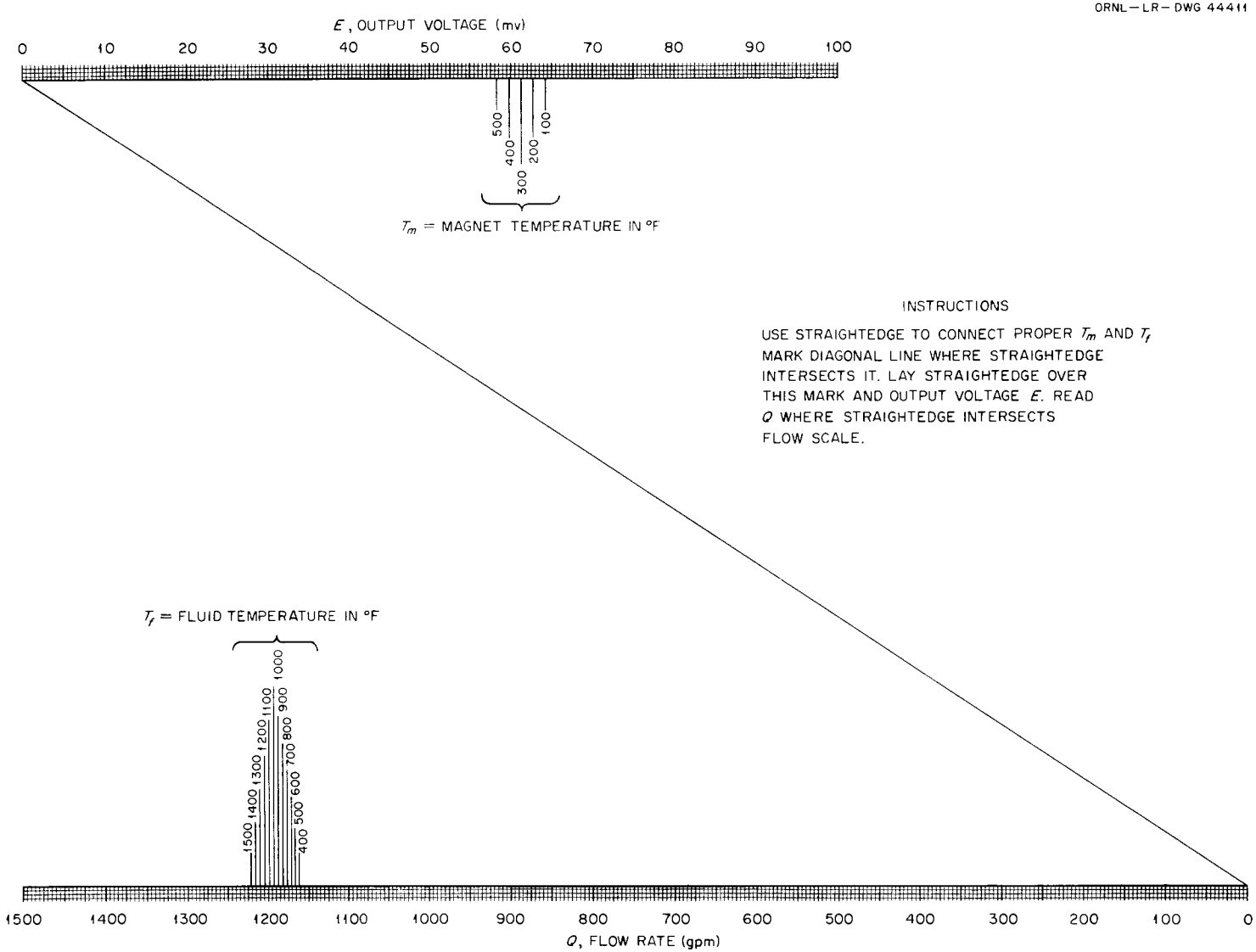


INSTRUCTIONS

USE STRAIGHTEDGE TO CONNECT PROPER $T_m$ AND $T_f$ MARK DIAGONAL LINE WHERE STRAIGHTEDGE INTERSECTS IT. LAY STRAIGHTEDGE OVER THIS MARK AND OUTPUT VOLTAGE $E$. READ $Q$ WHERE STRAIGHTEDGE INTERSECTS FLOW SCALE.

## *INTERNAL DISTRIBUTION*

1. C. E. Center
2. Biology Library
3. Health Physics Library
4–5. Central Research Library
6. Reactor Experimental Engineering Library
7–26. Laboratory Records Department
27. Laboratory Records, ORNL R.C.
28. A. M. Weinberg
29. L. B. Emlet (K-25)
30. J. P. Murray (Y-12)
31. J. A. Swartout
32. E. H. Taylor
33. E. D. Shipley
34. C. S. Harrill
35. M. L. Nelson
36. W. H. Jordan
37. S. C. Lind
38. F. L. Culler
39. A. H. Snell
40. A. Hollaender
41. M. T. Kelley
42. K. Z. Morgan
43. T. A. Lincoln
44. A. S. Householder
45. C. E. Winters
46. H. E. Seagren
47. D. Phillips
48. J. L. Lovvorn
49. P. R. Bell
50. C. J. Borkowski
51. G. S. Hurst
52. R. S. Livingston
53. E. Fairstein
54. P. M. Reyling
55. R. S. Cockreham
56. G. C. Williams
57. C. W. Sheppard
58. C. P. Keim
59. C. D. Susano
60. J. V. Francis
61. M. J. Skinner
62. R. W. Johnson
63. D. J. Fisher
64. E. G. Struxness
65. J. R. McNally, Jr.
66. J. L. Gabbard
67. R. A. Charpie
68. T. V. Blosser
69. E. L. Olson
70. J. A. Auxier
71. R. K. Abele
72. J. R. Tallackson
73. H. E. Banta
74. E. W. Burdette
75–80. G. H. Burger
81. C. A. Mossman
82. D. S. Toomb
83. H. J. Stripling
84–89. R. G. Affel
90. E. P. Epler
91. F. W. Manning
92. J. L. Blankenship
93. L. D. Roberts
94. J. W. T. Dabbs
95. J. Walter
96. S. H. Hanauer
97. R. H. Dilworth
98. W. G. Stone
99. ORNL – Y-12 Technical Library, Document Reference Section

## *EXTERNAL DISTRIBUTION*

100. Division of Research and Development, AEC, ORO
101–717. Given distribution as shown in TID-4500 (15th ed.) under Instruments category (100 copies – OTS)