MARTIN MARIETTA ENERGY SYSTEMS LIBRARIES
3 4456 0361289 2

CCH 5

CENTRAL RESEARCH LIBRARY
DOCUMENT COLLECTION

ORNL-2587 REVISED
Instruments

THE LID TANK SHIELDING FACILITY AT OAK RIDGE NATIONAL LABORATORY

PART III. INSTRUMENTATION

D. W. Cady

CENTRAL RESEARCH LIBRARY
DOCUMENT COLLECTION
LIBRARY LOAN COPY
DO NOT TRANSFER TO ANOTHER PERSON
If you wish someone else to see this document, send in name with document and the library will arrange a loan.

OAK RIDGE NATIONAL LABORATORY
operated by
UNION CARBIDE CORPORATION
for the
U.S. ATOMIC ENERGY COMMISSION

Printed in USA. Price $2.00. Available from the
Office of Technical Services
Department of Commerce
Washington 25, D.C.

LEGAL NOTICE

This report was prepared as an account of Government sponsored work. Neither the United States, nor the Commission, nor any person acting on behalf of the Commission:

A. Makes any warranty or representation, expressed or implied, with respect to the accuracy, completeness, or usefulness of the information contained in this report, or that the use of any information, apparatus, method, or process disclosed in this report may not infringe privately owned rights; or

B. Assumes any liabilities with respect to the use of, or for damages resulting from the use of any information, apparatus, method, or process disclosed in this report.

As used in the above, "person acting on behalf of the Commission" includes any employee or contractor of the Commission, or employee of such contractor, to the extent that such employee or contractor of the Commission, or employee of such contractor prepares, disseminates, or provides access to, any information pursuant to his employment or contract with the Commission, or his employment with such contractor.

ORNL-2587
Copy _____

Contract No. W-7405-eng-26

Neutron Physics Division

THE LID TANK SHIELDING FACILITY AT OAK RIDGE NATIONAL LABORATORY PART III. INSTRUMENTATION*

D. W. Cady**

Date Issued

JAN 4 1960

OAK RIDGE NATIONAL LABORATORY
Oak Ridge, Tennessee
operated by
UNION CARBIDE CORPORATION
for the
U. S. ATOMIC ENERGY COMMISSION

*Part I. ORNL-2531 (to be published); Part II. ORNL-2350 (1959).
**On assignment from Wright Air Development Center, Wright-Patterson Air Force Base.

LIBRARIES
3 4456 0361289 2

ABSTRACT

The instrumentation at the Lid Tank Shielding Facility (LTSF) is described. Drawings or photographs of the gamma-ray, thermal-neutron, and fast-neutron detectors are included, and these detectors are discussed. The methods of detector application at the LTSF are also described, as well as the calibration techniques. The electronics associated with each detector is presented with appropriate references. The range of sensitivity of each detector is also given, along with estimates of the reliability of data from the detection system.

ACKNOWLEDGEMENTS

The author wishes to express his appreciation to the members of the LTSF staff for their assistance in the selection and accumulation of material included in this paper. In particular, he is indebted to W. Zobel, the LTSF Section Leader, who suggested that this paper be written and made many recommendations as to content. P. T. Perdue, ORNL Instrument Department, gave valuable assistance on the sections pertaining to the electronic circuitry, especially that dealing with the semiautomatic electrometer, and R. Abele, also of the ORNL Instrument Department, was exceedingly helpful in making instrument drawings and construction details available.

TABLE OF CONTENTS

		Page No.
	ABSTRACT	iii
	ACKNOWLEDGEMENTS	iv
	INTRODUCTION	1
I.	RADIATION DETECTION INSTRUMENTS	5
	Gamma-Ray Dosimeters	5
	Thermal-Neutron Detectors	7
	Fast-Neutron Detectors	15
II.	ELECTRONICS	20
	Preamplifiers and Amplifiers	20
	"Read-Out" Instruments	29
	Semiautomatic Electrometer	29
	Fast Decade Scaler	32
	Auxiliary Instruments	35
III.	OPERATION	36
	Detector Calibration Techniques	36
	Determination of Center of Detection	36
	Calibration of Gamma-Ray Dosimeters	39
	Calibration of Thermal-Neutron Detectors	43
	Calibration of Fast-Neutron Dosimeters	46
	Ranges of Systems	50
	Data Reliability Estimates: Possible Sources of Errors	52
App. A.	CALCULATION OF THE FIELD TUBE POTENTIAL OF THE FN-80 FAST-NEUTRON DOSIMETER	54
App. B.	LIST OF FIGURES	56
	REFERENCES	58

INTRODUCTION

Since the construction of the Lid Tank Shielding Facility (LTSF) in 1949, the development of radiation detection techniques has played a prominent role in the experimental program of the facility. The facility itself[1-3] consists of a large water-filled steel tank which has a disk-shaped source plate mounted in one wall, as shown in Fig. 1. The tank assembly is mounted like a "lid" over a hole in the ORNL Graphite Reactor shield so that the thermal neutrons streaming through the hole (called the "Core Hole") cause fissions in the source plate. In a typical experiment a shield sample is placed in the tank, usually close to the source, and measurements of the radiation at various points beyond the sample are made. Since these measurements must be taken in water, one of the first tasks at the LTSF was the development of waterproof housings for the detectors. Also, the attenuation inherent in thick configurations prompted the development of new, more sensitive detectors.

With the exception of the counters themselves, all of the instrumentation at the LTSF is contained within a central five-bank control panel as shown in Fig. 2. Although most of the LTSF detectors and associated electronics are common types which are widely used in other experimental facilities, the methods of application at the LTSF remain unique in many respects, and this facet of the facility operation should be of interest to users of the LTSF data. With this in mind, this report describing the LTSF instrumentation has been prepared as one of a series of three reports on the facility.[1,3] It includes descriptions of the detectors (in detail where it was thought necessary), the circuits of the pertinent electronics with a discussion of the operating characteristics of each, and block diagrams of the complete systems. The calibration procedures

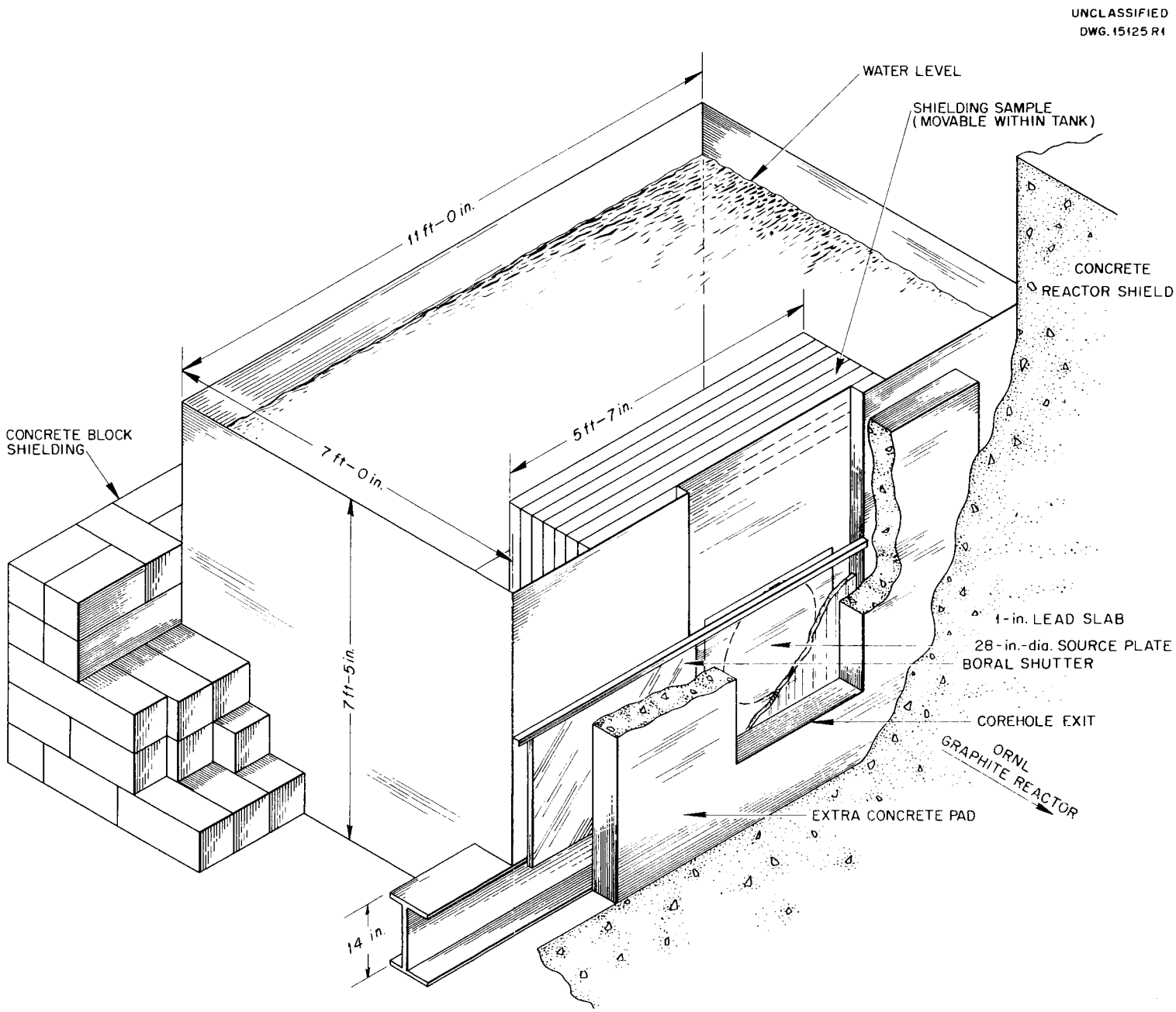

Fig. 1. The Lid Tank Shielding Facility.

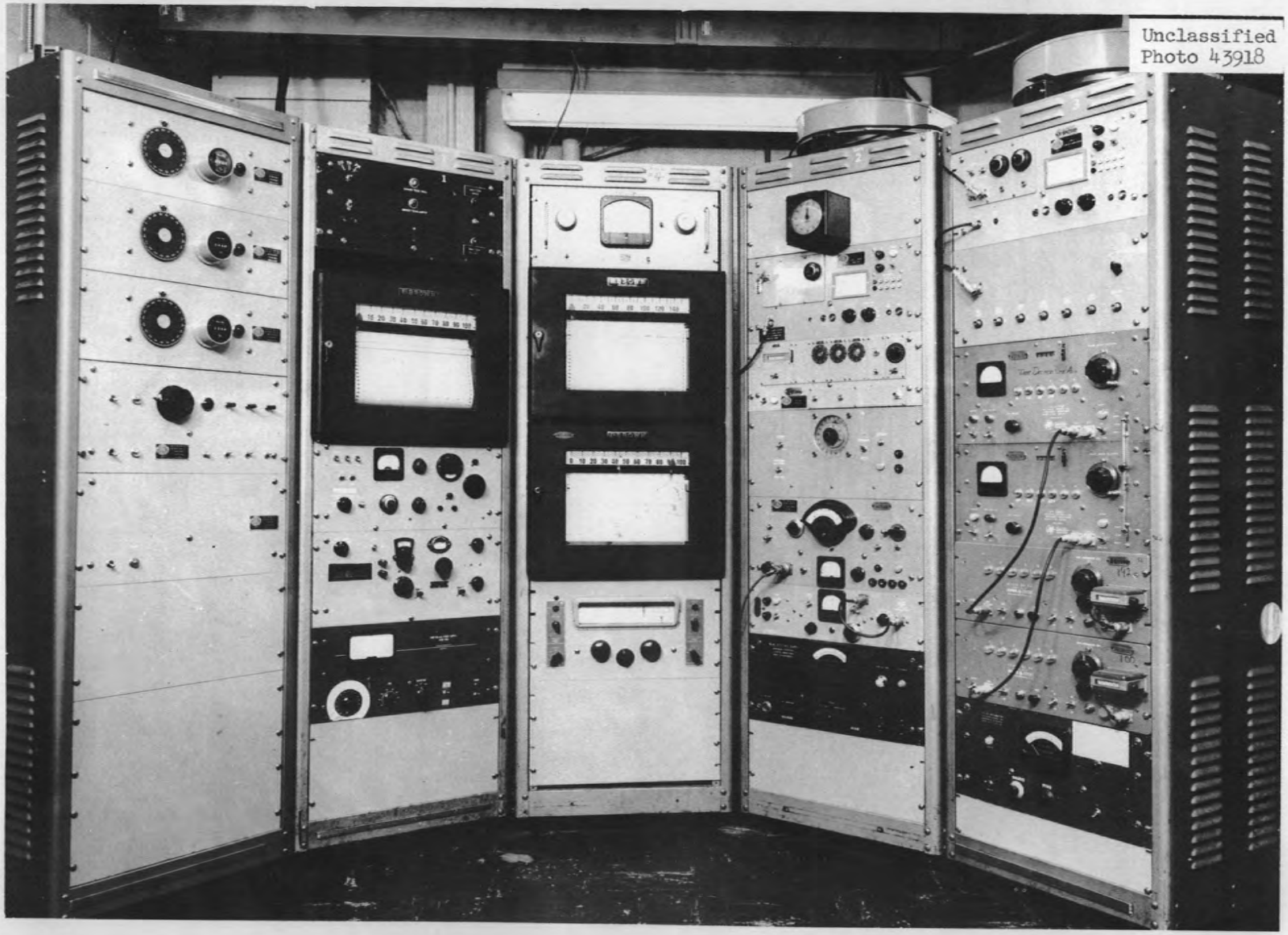

Fig. 2. Instrument Control Racks.

for the detectors and instruments and the ranges of sensitivity are also discussed, as well as the estimates of the errors involved in the LTSF measurements. Although an attempt has been made to discuss all the LTSF instrumentation in this report, those instruments which have been adequately described elsewhere are only briefly described here, and the reader is referred to pertinent references.

It will be noticed in the discussion which follows that references are made to two LTSF source plates, the "old" plate and the "new" plate. The old source plate, now designated as the SP-1, consisted of rows of natural uranium slugs stacked one upon the other and held between layers of masonite. The new source plate, called the SP-2, is a thin uranium disk. The calibration of the SP-2 is the subject of another report[3] in this series of reports on the LTSF.

I. RADIATION DETECTION INSTRUMENTS

Gamma-Ray Dosimeters

Two types of instruments are used at the LTSF for the determination of gamma-ray tissue dose rates. The first is a standard scintillation detector employing a photomultiplier tube (also called a phototube) and a cylindrically shaped anthracene crystal. The LTSF has two such detectors. One, designated as PM(A), uses a 1-1/2-in.-dia by 7/8-in.-thick crystal and an RCA-type 5819 phototube, while the other, designated as PM(B), uses a 1-1/4-in.-dia by 7/8-in.-thick crystal and an RCA-type 6655 phototube.

The PM(A) crystal is contained in a thin aluminum can slightly larger than the crystal, and the space between the crystal and the can is filled with talc ($3MgO \cdot 4SiO_2 \cdot H_2O$) for light reflection. An open end of the can is mounted on one end of the phototube by means of a lucite ring which fits over both the can and the phototube. A thin lucite light piper is placed just inside the ring in direct contact with the phototube. Dow-Corning silicone lubricant is used to maintain good optical contact between the crystal, the light piper, and the phototube.

The PM(B) crystal is wrapped with 1-mil-thick aluminum foil and held in a lucite container. The open end of the container fits over the end of the phototube in the same manner as that used for PM(A). The PM(B) dosimeter is shown in the lower half of Fig. 3 with its housing removed. The phototube, protected from external magnetic fields by a Mumetal shield, and the crystal are covered with black tape and attached to an electrometer, which is discussed later.

Unclassified
Photo 43846

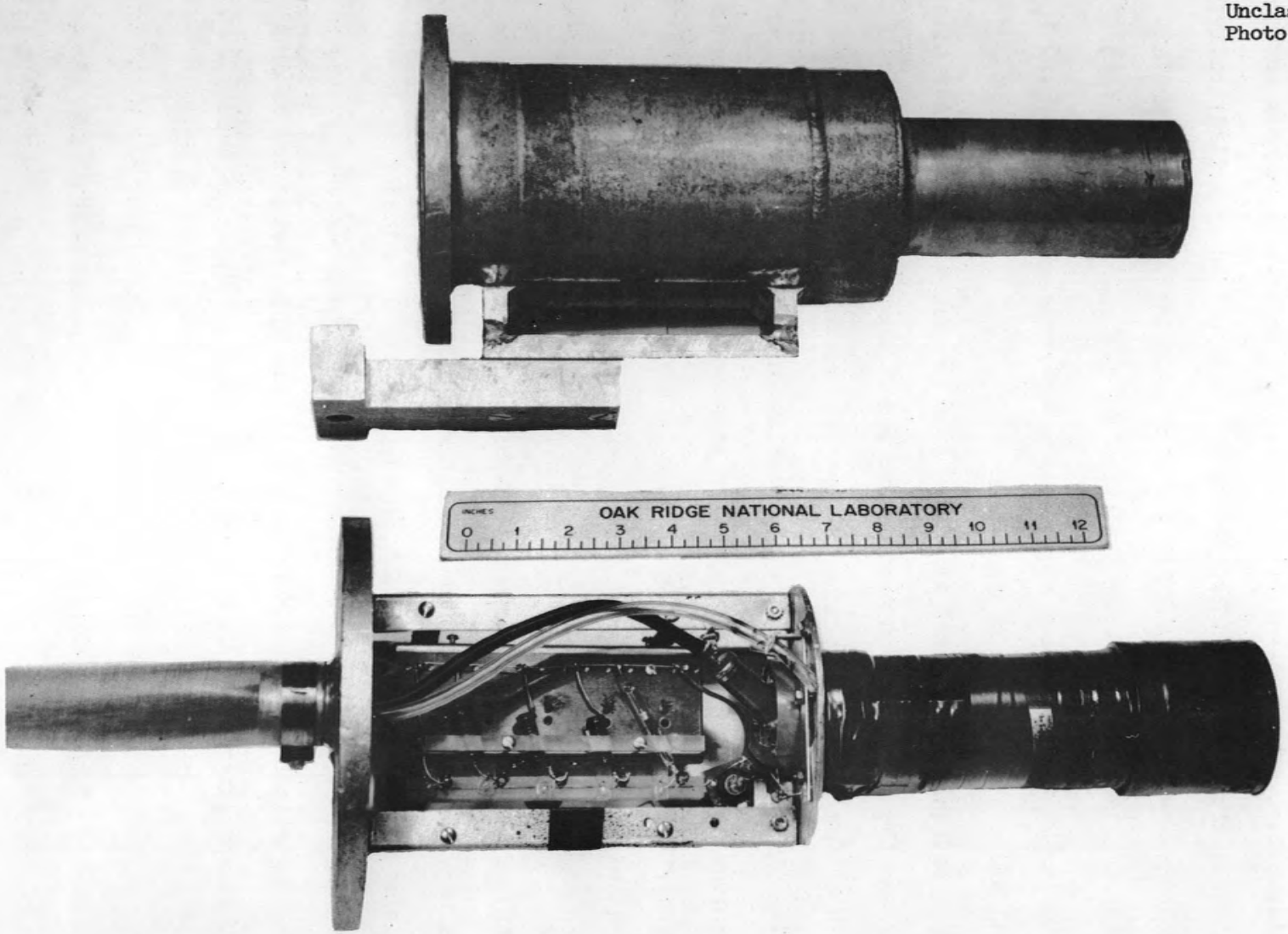

Fig. 3. PM (B) Gamma-Ray Dosimeter.

Both PM(A) and PM(B) are encased in aluminum containers with 1/8-in.-thick walls (Fig. 3). The purpose of this cover is to allow operation of the detectors while they are submerged in the liquids of the Lid Tank (usually water). The entire case is kept at an 8- to 9-lb pressure above atmosphere by an external air supply.

The second type of instrument used for gamma-ray tissue dose-rate determinations is a 50-cc spherical gamma-ray ionization chamber (Fig. 4), which has graphite walls and a central graphite electrode. This chamber is filled with carbon dioxide gas to a pressure of 18 in. Hg above atmospheric pressure. The 50-cc volume of gas was chosen as the most suitable for LTSF applications because its range of sensitivity is wide enough to cover the highest gamma-ray fields encountered in the LTSF and it also overlaps the region covered by the PM(A) and PM(B) detectors. A more detailed description of this ionization chamber, which was designed and constructed by Roland K. Abele of the ORNL Instrument Department, can be found in Ref. 4. Additional information on the measurement of gamma-ray dosage and the use of the graphite-walled ionization chambers may be found, along with a bibliography, in a paper by Robley D. Evans.[5] A detailed discussion of a somewhat different 50-cc chamber is also presented in a report by Ballweg and Meem.[6]

Thermal-Neutron Detectors

Thermal-neutron fluxes at the LTSF are measured with conventional detectors, i.e., gold foils (bare and cadmium-covered), fission chambers, and boron trifluoride (BF_3) proportional counters. The ranges of sensitivity of these instruments are such that either the lower or the upper extreme on the range of any one instrument's sensitivity will overlap with the range of at least one of the other detectors. As is shown in Section III of this report, these overlapping

UNCLASSIFIED
2-01-058-0-300

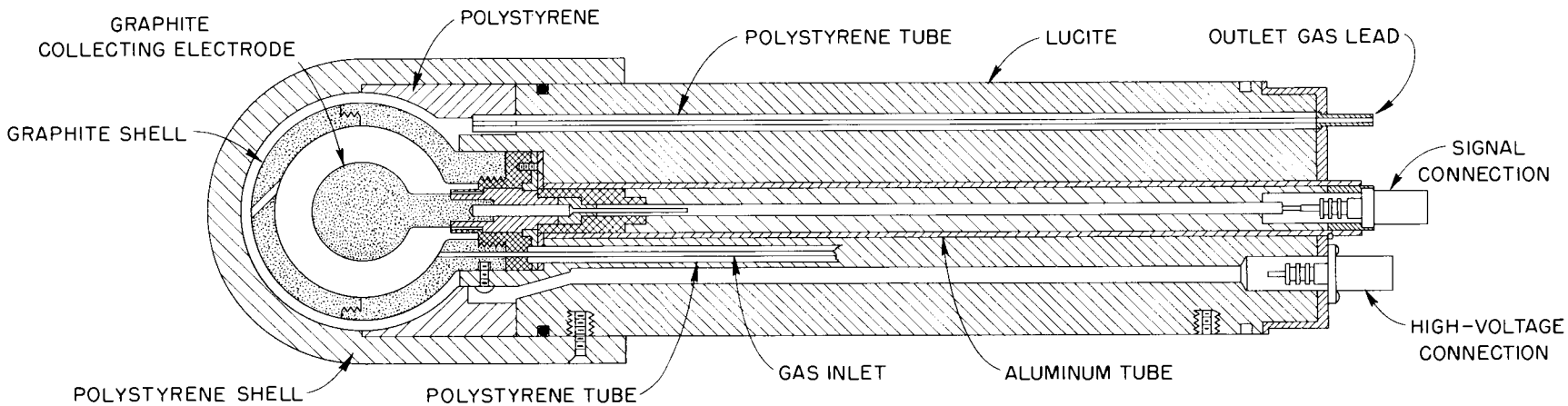

Fig. 4. 50-cc Spherical Ionization Chamber.

regions are vital to the calibration of the instruments.

The gold foils used are all 1 cm square and 2 mils thick. When they are suspended in liquids they are mounted on a lucite foil holder (Fig. 5). When they are used to determine the flux distribution within solid shield mockups, they are taped on the shield components at the desired positions in the shield. Section III explains in more detail how gold foil measurements are used to calibrate the other thermal-neutron detectors.

In the region of high thermal-neutron flux, parallel-plate fission chambers are used. In these detectors the sensitive elements are constructed by sputtering a thin coating of uranium, enriched to 93.11% in U^{235}, onto nickel disks which are placed in gas-filled chambers of approximately the same diameter. The gas mixture consists of 97% argon and 3% CO_2 held to a gage pressure of 14 in. Hg. Incident neutrons cause fissioning in the U^{235}, and the fission fragments cause ionization of the gas. The 3% CO_2 is present in the gas medium merely to quench the rather long pulses caused by the fission fragments.[7]

The sensitivity of a fission detector, of course, is dependent on the amount of U^{235} deposited per square centimeter and the diameter of the disk. The LTSF has three fission chambers, one having a nominal 1/2-in.-dia disk and two having 3-in.-dia disks (Figs. 6 and 7). The 1/2-in. chamber is the least sensitive and is used for measurements in the regions of highest flux. The range of sensitivity of the 3-in. chambers overlaps the lowest range of the 1/2-in. chamber and the highest range of the BF_3 detectors (see Section III, p. 51).

The fission chambers are enclosed in aluminum cases similar to those used for the gamma-ray scintillation counters and serving the same purpose. The argon-CO_2 gas mixture supply for the fission chambers is fed into the chamber

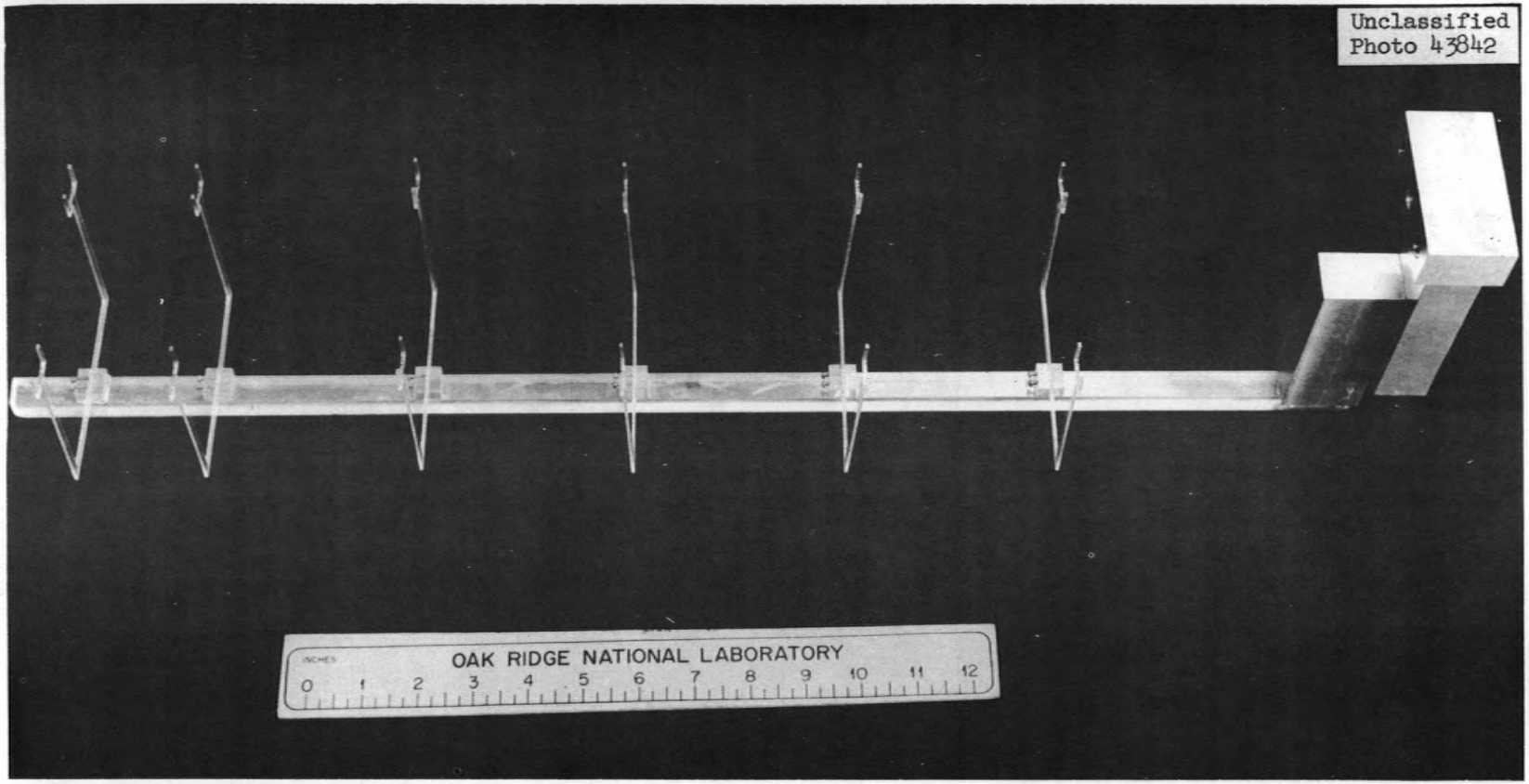

Fig. 5. Foil Holder.

Unclassified
Photo 43843

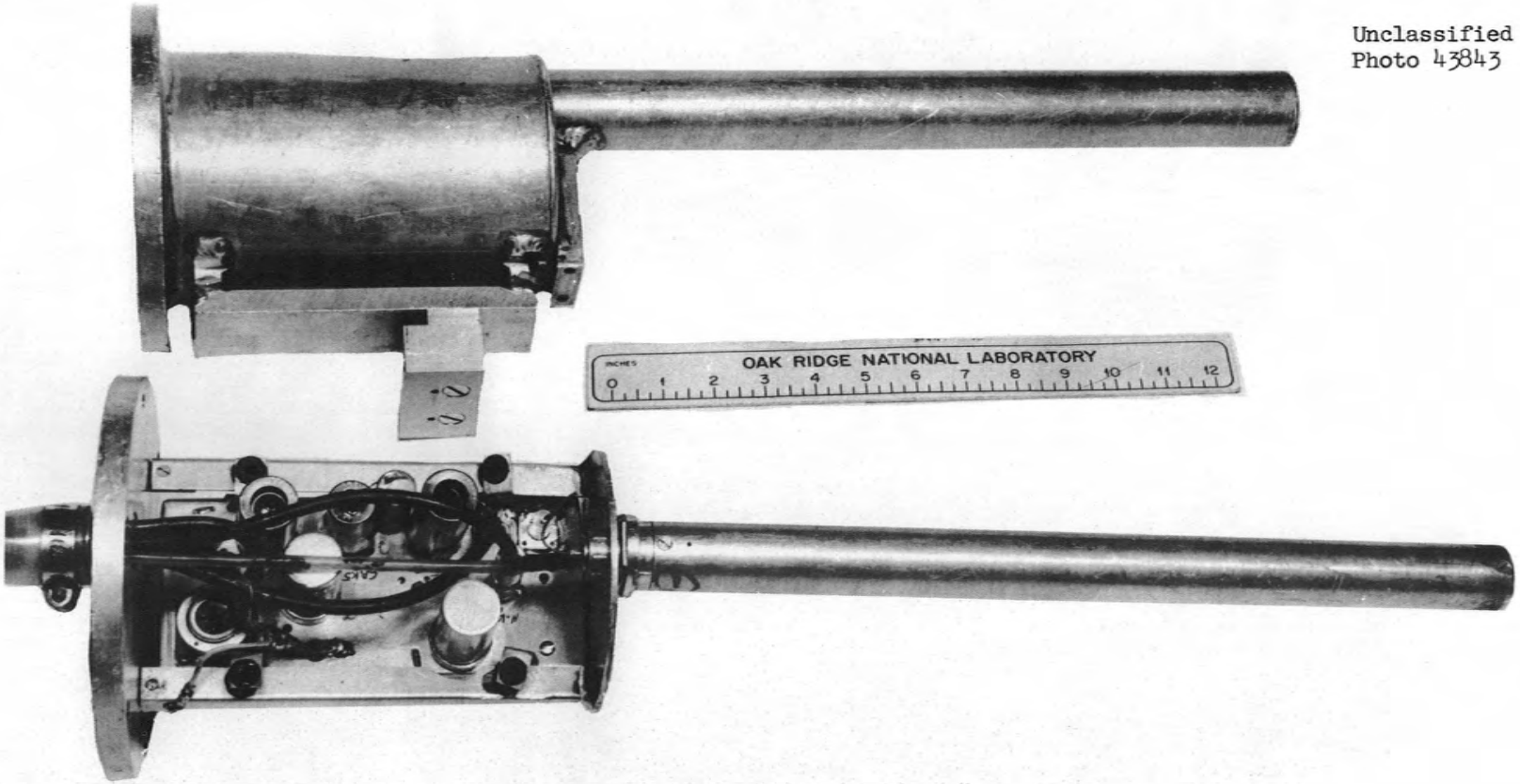

Fig. 6. 1/2-in. Fission Chamber.

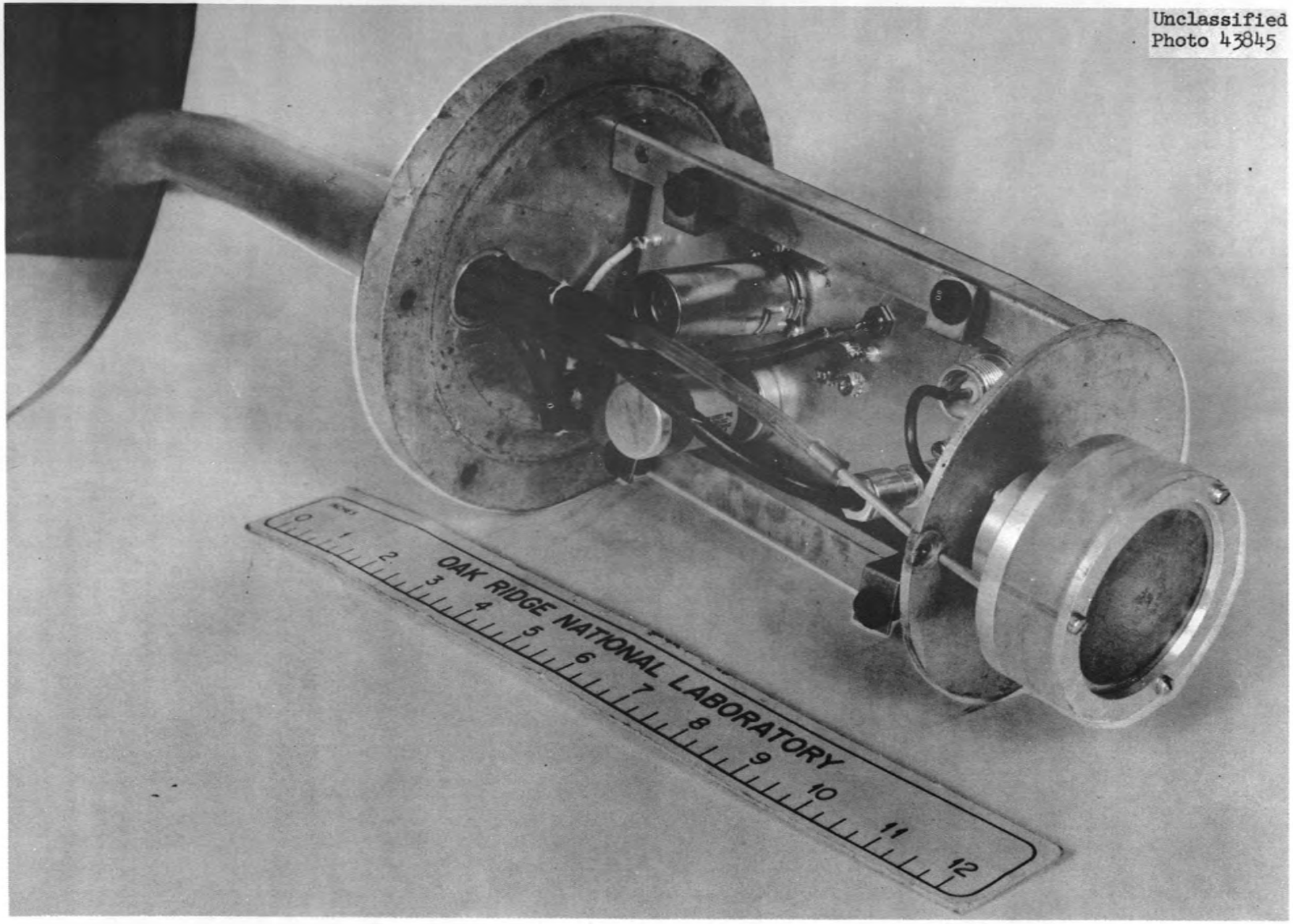

Fig. 7. 3-in. Fission Chamber (A).

containing the fission disk and exhausts into the outer aluminum case so that the same gas supply pressurizes both the counting volume and the outer protective aluminum case. After an initial flushing of the system the pressure is adjusted to the static pressure of 14 in. Hg. A discussion of various types of fission chambers and construction techniques is given in Ref. 8.

For measurements of thermal-neutron fluxes of medium or low intensity, the BF_3 counters are utilized. These again are standard instruments and are described in numerous publications.[9] The LTSF uses two sizes, one 12-1/2 in. long and another 8 in. long (Fig. 8). In the past a combination of two 12-1/2-in.-long chambers in parallel in the same aluminum container was used to obtain greater sensitivity than was possible with a single chamber. This increased sensitivity was needed at that time because of the low power of the source plate (1.7 watts). However, the newly installed source plate has considerably greater power (5.22 watts)[3] and single chambers (referred to as single-barrell counters) have been found satisfactory.

The BF_3 counters, as are all of the detectors described here with the exception of the PM(A) and PM(B) detectors, are constructed by the Instrument Department of the Instrumentation and Controls Division, ORNL. The BF_3 gas is enriched to 96% in B^{10}. The 8-in. BF_3 counters are charged to a pressure of 8 cm Hg absolute with an argon-$B^{10}F_3$ mixture. The single-barrel 12-1/2-in. counter contains a similar mixture held at a pressure of 15 cm Hg absolute, while both chambers in the double-barrel counter contain a pressure of 30 cm Hg absolute. The aluminum containers (Fig. 8) are filled with air at a pressure of 8 to 9 lb (gage) to avoid leakage of the surrounding liquids into the chambers.

Unclassified
Photo 43844

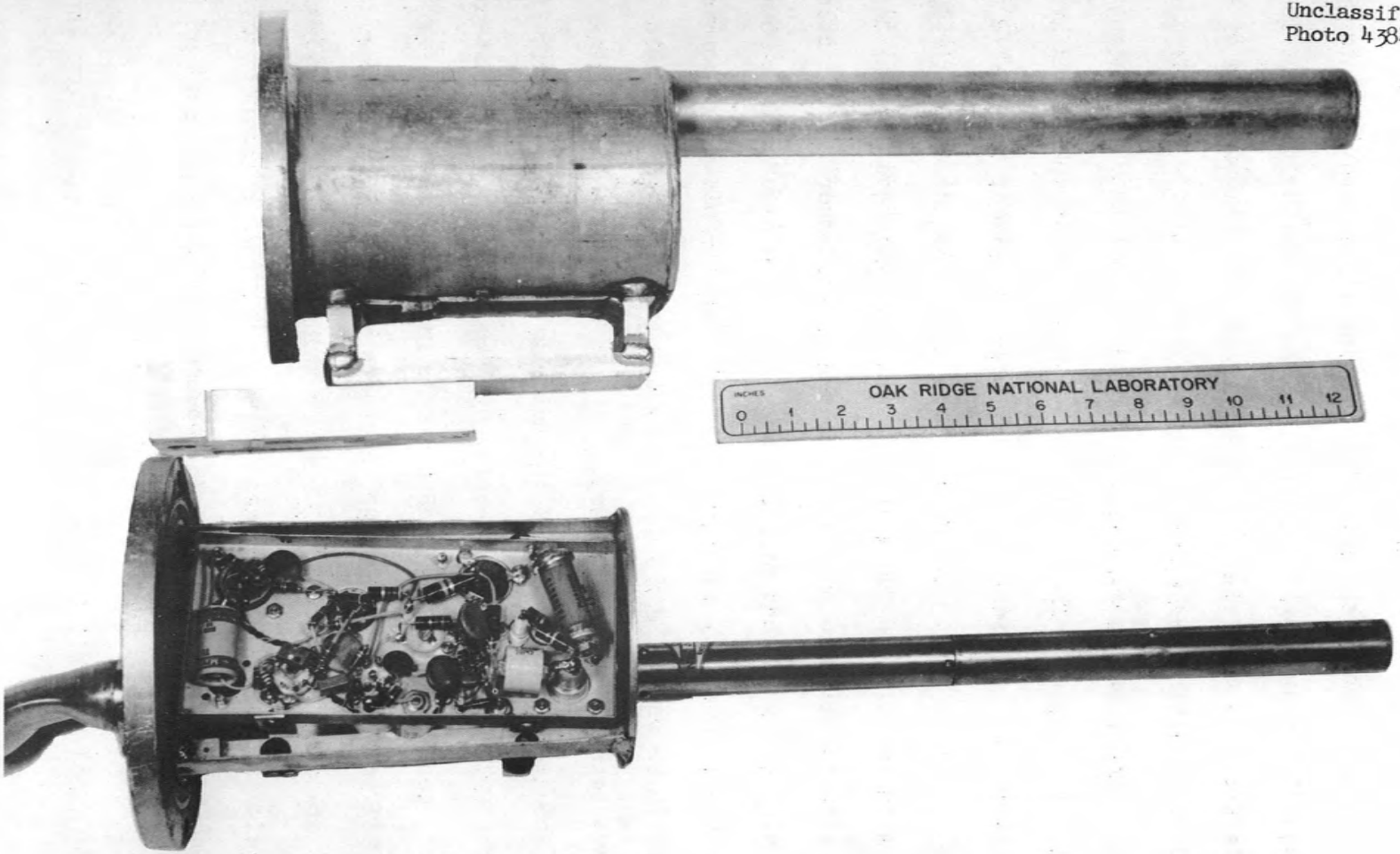

Fig. 8. 8-in. BF_3 Counter.

Fast-Neutron Detectors

For the measurements of fast-neutron dose rates, proportional counters, commonly known as dosimeters, are used.[10-12] Hurst dosimeters consist of hydrogenous (polyethylene) walled chambers filled with ethylene gas to a pressure of 1 atm absolute. The inner surface of the chambers is coated with a thin film of Aquadag,* which is usually applied with an air brush and serves as the second electrode. The collecting, or high-voltage, electrode is stainless steel wire mounted on the chamber axis and extending the entire length of the cylinder. The atomic composition of the walls is identical to that of the filling gas and thus the Bragg-Gray principle[13] is fulfilled. The fast neutrons suffer elastic collisions with nuclei of the hydrogeneous material, and the recoil hydrogen nuclei give up their energy by ionization. This pulse formed by the collection of the electrons at the center electrode is fed to the preamplifier. A discussion of an early version of the Hurst dosimeter can be found in Ref. 14.

The LTSF uses, or has used, three variations of the Hurst dosimeter. These dosimeters, which differ in several respects, are designated as FN-62 (Fig. 9), FN-80 (Fig. 10), and FN-82 (Fig. 11). The FN-62 and FN-80 have approximately the same sensitivity, while the FN-82 is much less sensitive, and, consequently, is used in regions of high flux. Both the FN-80 and the FN-82, the latter commonly called the phantom dosimeter, have only one chamber, while the FN-62 has three chambers utilizing a common center electrode. The center electrode for the FN-62 is 1 mil in diameter, while that for the FN-80 is 2 mils in

---

* "Aquadag" is the trade name of Acheson Colloids Corporation for 22% colloidal graphite in water.

UNCLASSIFIED
2-01-057-0-448

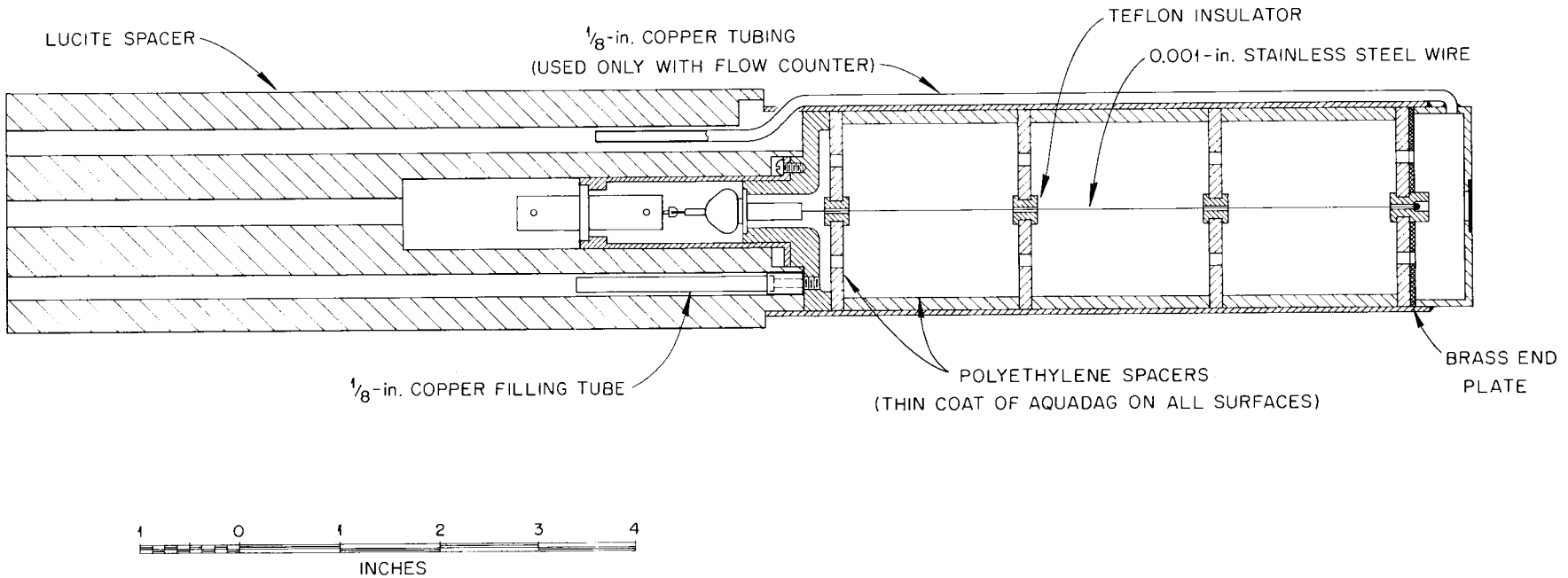

Fig. 9. 3-Section Fast-Neutron Proportional Counter Dosimeter (FN-62).

UNCLASSIFIED
2-01-057-0-446

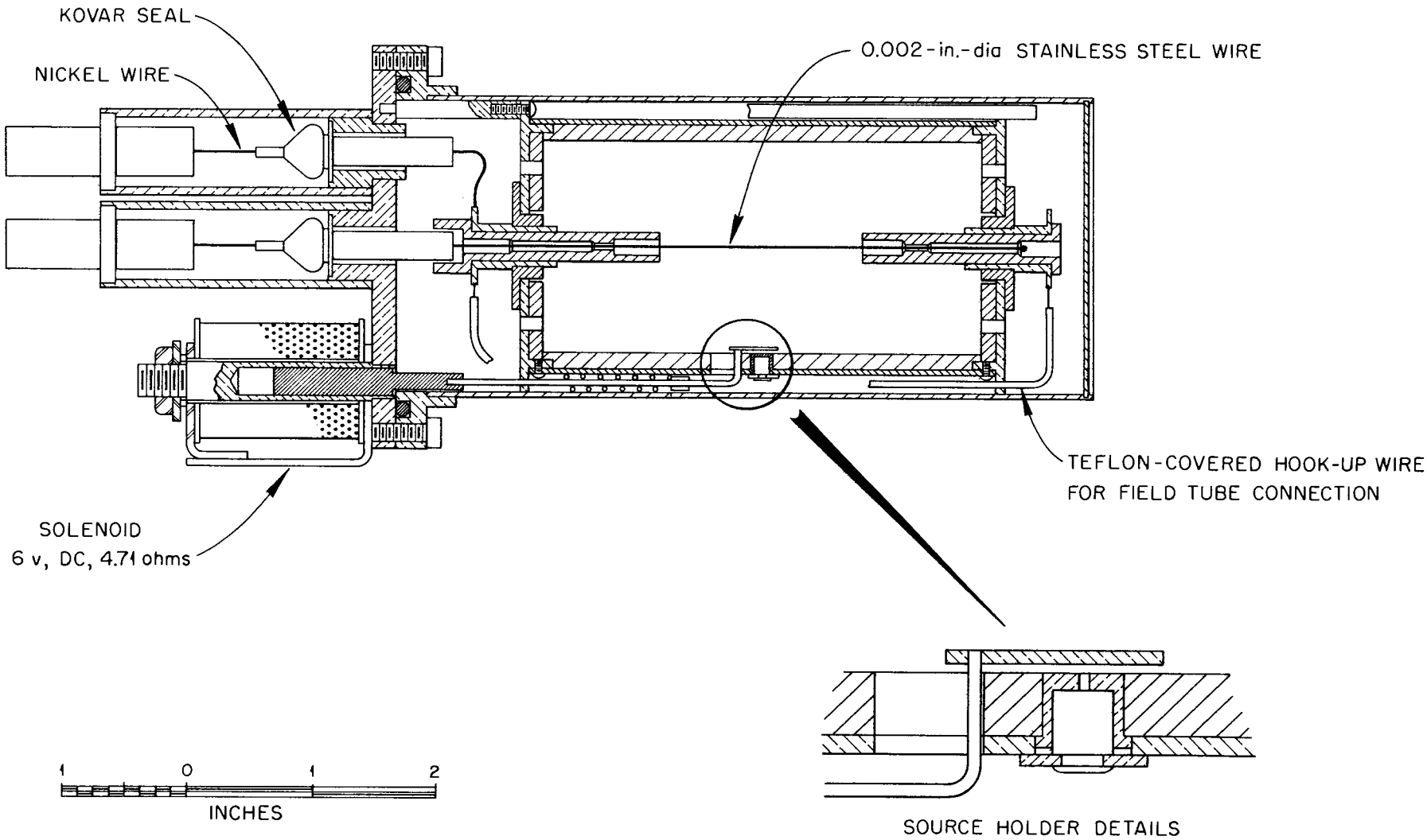

Fig. 10. Absolute Fast-Neutron Proportional Counter Dosimeter (FN-80).

UNCLASSIFIED
2-01-057-0-447

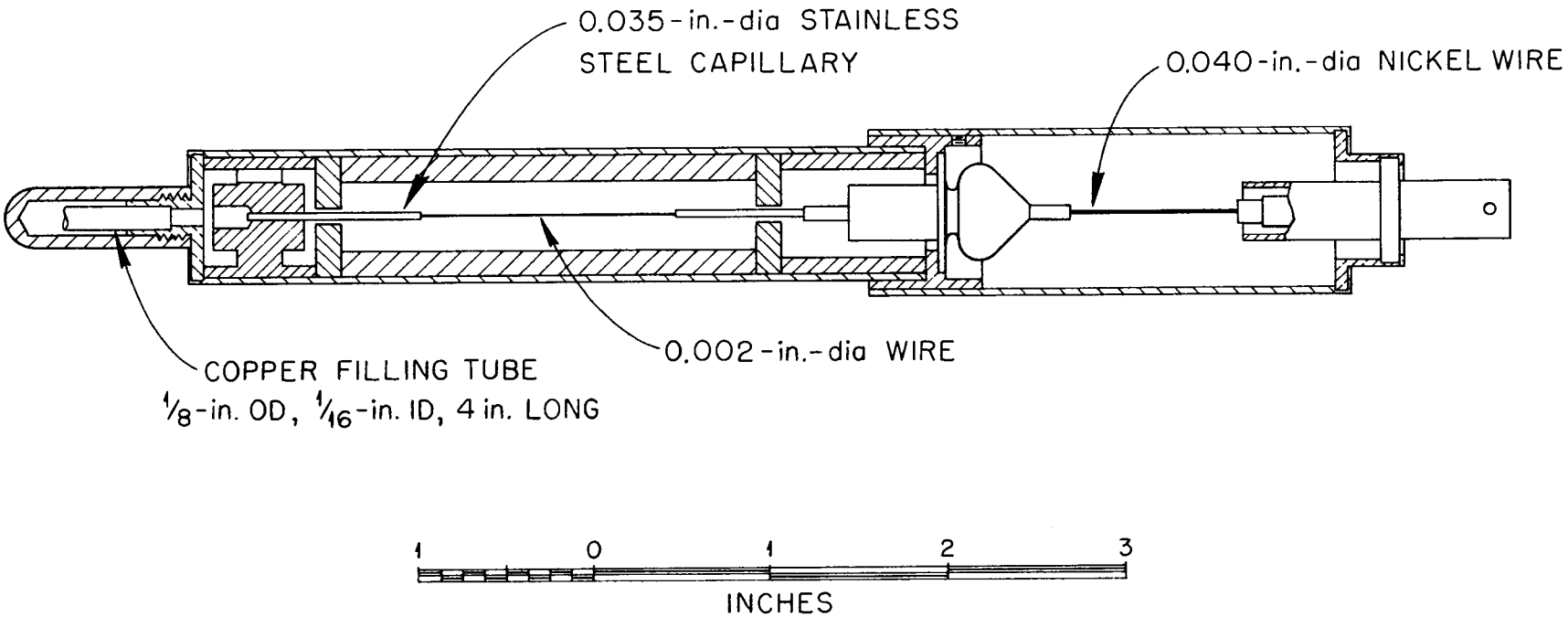

Fig. 11. Phantom Fast-Neutron Dosimeter (FN-82).

diameter and that for the FN-82 is 2 mils in diameter.

The FN-80 has the unique feature of a built-in plutonium alpha source, which can be used for calibration purposes since the sensitive volume of the chamber is known. This source is built into the side wall of the chamber and can be covered by a remotely controlled brass shutter so that it will not interfere with neutron dose measurements. The advantage of having a detector with a self-contained source is that the operation of the instrument can be checked while it is still in the Lid Tank. The detector can be moved to the rear of the tank (away from source plate) and the PHS curve rechecked by using the self-contained source. This can be a considerable time saver. However, difficulty has been experienced with this chamber due to contamination by the source. When this occurs the chamber must be disassembled and decontaminated.

The FN-80 also utilizes field tubes to determine or limit the active volume of the chamber.[15] For this reason the ratio of the field voltage and the voltage applied to the central electrode is quite critical. A change in this ratio changes the active volume of the chamber. The chamber in use at this time is operated with a field voltage of +725 v and a central electrode voltage of +2420 v. At these voltages, the active volume of the chamber is approximately 60 cc. Appendix A contains a description of the method used to determine these voltages and the active volume.

Since these dosimeters, like the gamma-ray and thermal-neutron instruments, are usually operated while they are submerged in water, borated water, or oil, they must be enclosed in some type of liquid-proof case. This outer container is for the protection not only of the detection chambers but also of the enclosed preamplifiers. The three chambers of the FN-62 are enclosed in a brass shell

and this, in turn, is enclosed in a lucite cylinder. The lucite cylinder is attached to an aluminum can containing the preamplifier. The space in the aluminum can and that between the brass and lucite cylinders is filled with air at a pressure of about 10 lb gage. The chambers of the FN-80 and the FN-82 are enclosed in brass cylinders which are sealed to the aluminum housings for the preamplifiers. These housings are also attached to an external air supply and maintained at a pressure of 8 to 10 lb gage.

II. ELECTRONICS

Preamplifiers and Amplifiers

The block diagrams of the complete detection systems for the gamma-ray, thermal-neutron, and fast-neutron measurements are shown in Figs. 12, 13, and 14, respectively. All of the instruments, with the exception of those used for gamma-ray measurements, utilize preamplifiers enclosed in the outer aluminum protective covers along with the detectors themselves.

The system used for gamma-ray dose measurements (Fig. 12) is the simplest in that no preamplifier or amplifier is used. Since the LTSF is primarily interested in measuring dose rates, the output current of the phototubes and the 50-cc ionization chamber is of primary concern. In all three of the gamma-ray instruments, PM(A), PM(B), and the 50-cc ionization chamber, the output current from the detector is fed to an electrometer. One tube of the electrometer and a "flute switch" (Fig. 15) are placed within the aluminum detector housing in the same position occupied by the preamplifier in the other instruments. The flute switch is merely an array of relays which allows the operator to remotely vary the electrometer grid resistance by

UNCLASSIFIED
2-01-057-0-451

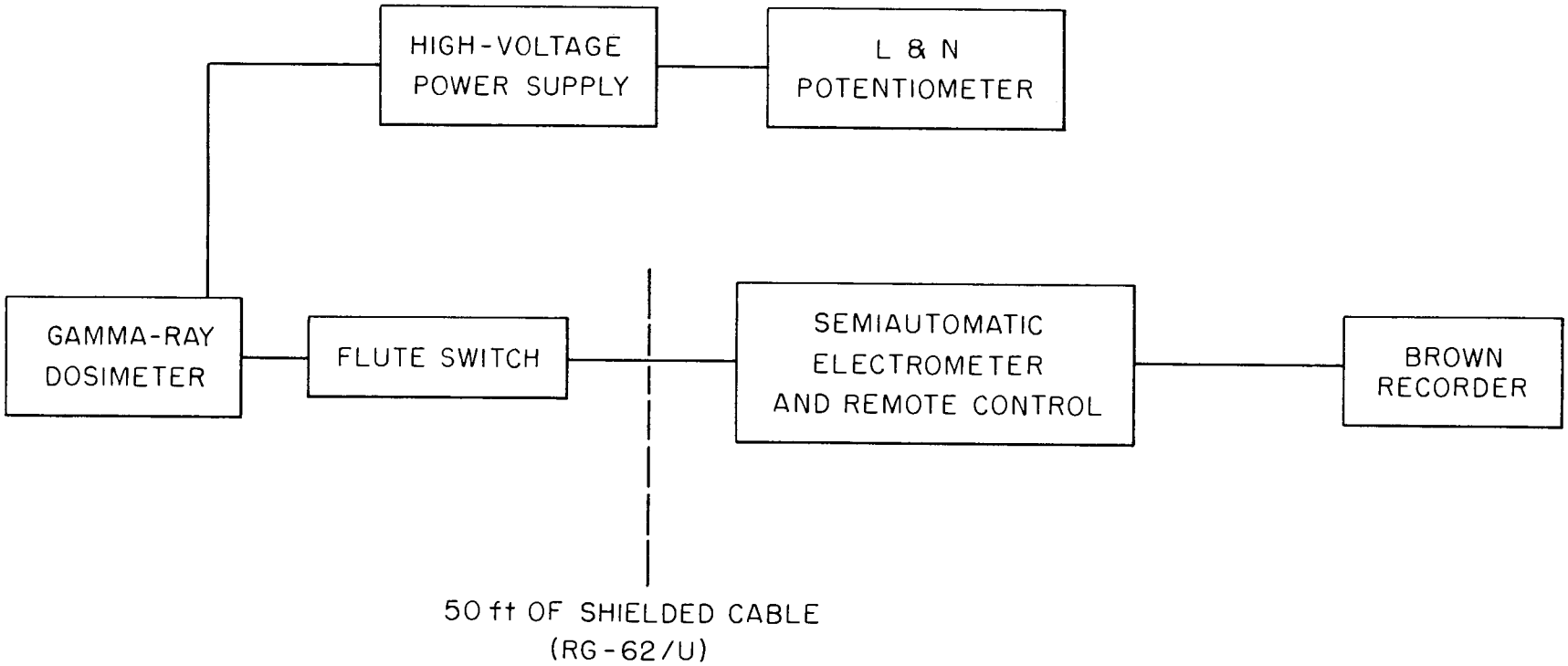

Fig. 12. Gamma-Ray Dose Rate Measurement System.

UNCLASSIFIED
2-01-057-0-452

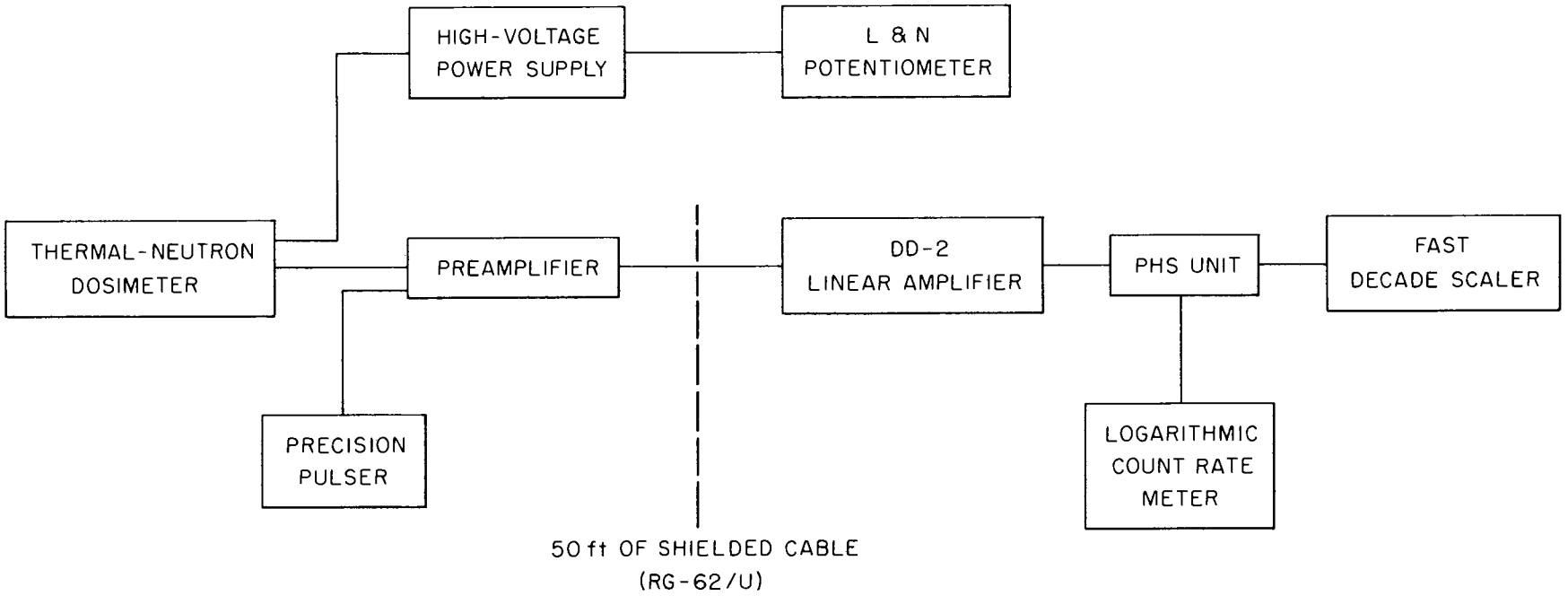

Fig. 13. Thermal-Neutron Flux Measurement System.

UNCLASSIFIED
2-01-057-0-453

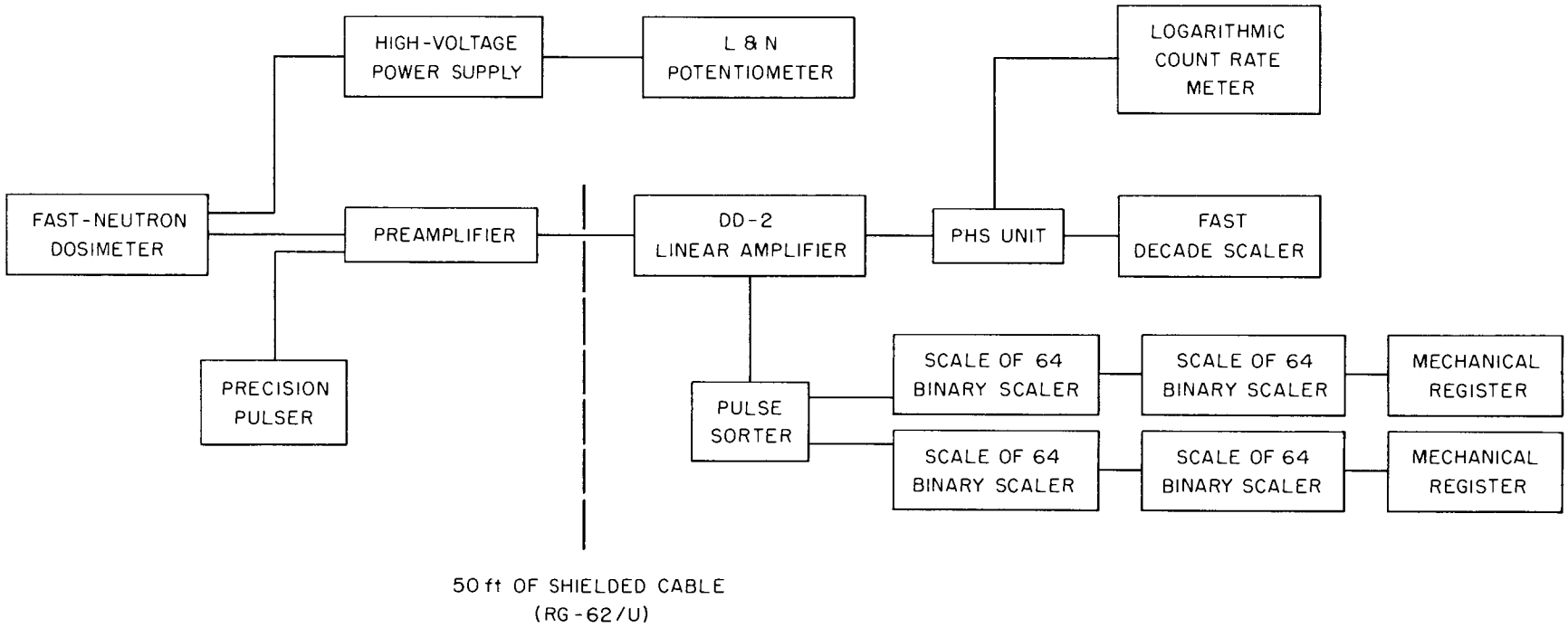

Fig. 14. Fast-Neutron Dose Rate Measurement System: Pulse Integrator.

Unclassified
Photo 44126

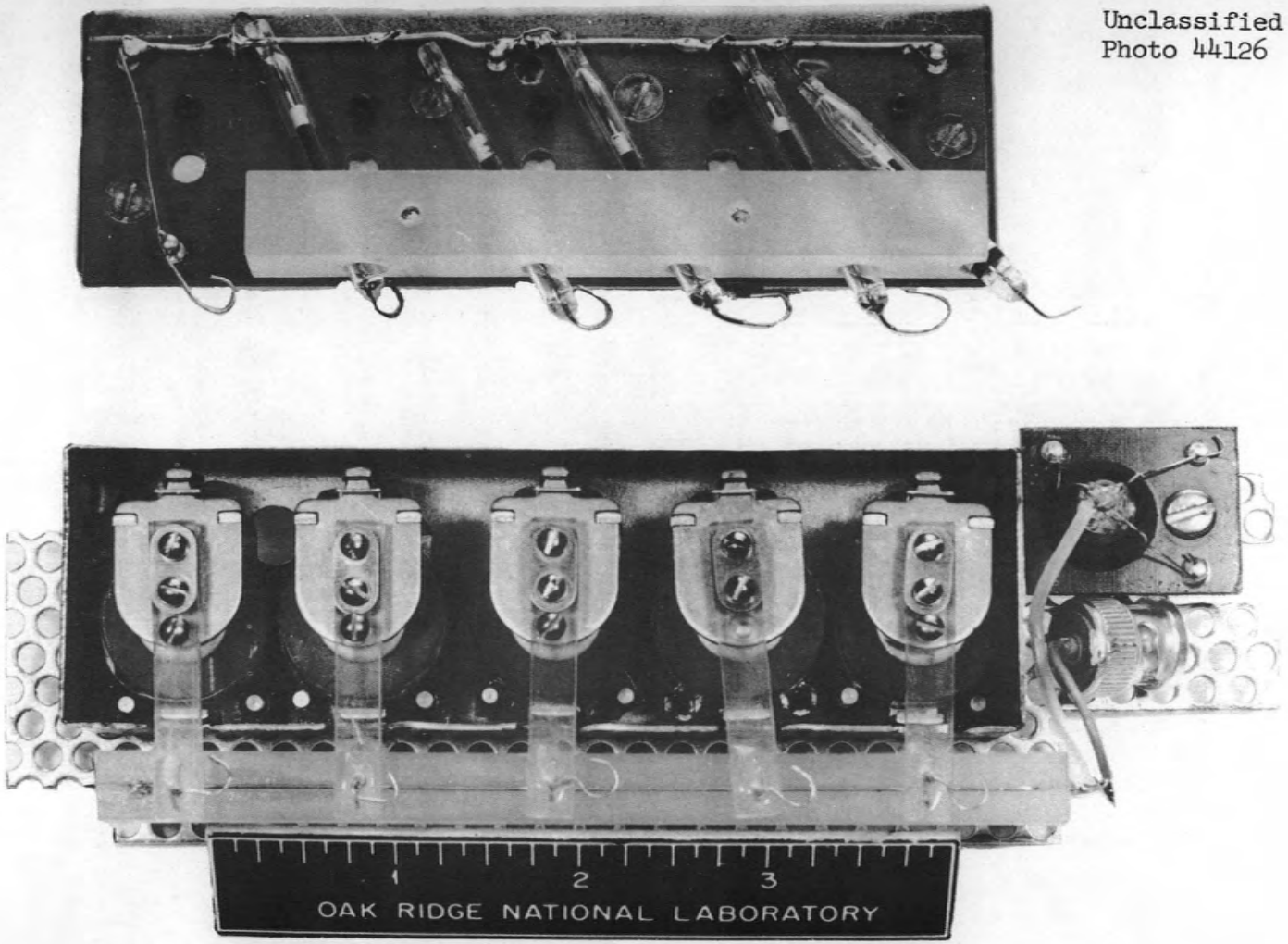

Fig. 15. Flute Switch.

factors of 10. The switch assembly, carrying the electrometer tube and grid resistors, is contained within the detector case to minimize the length of the grid lead. This is discussed further in the section below. The remaining portions of the electrometer circuit are located in the LTSF control room. The sensitivity of PM(A) and PM(B) may be varied in four steps by switching through resistor values of 10^5 to 10^8 ohms. A range of 10^7 to 10^{10} ohms is available for the 50-cc ionization chamber. The voltage drop across these resistors is "bucked" against a battery in the electrometer circuit and the voltage is read on a Minneapolis-Honeywell self-balancing potentiometer. The circuits for the flute switch and the electrometer are shown in Fig. 16.

The preamplifier design shown in Fig. 17 is used for the 1/2-in. fission chamber, the 8-in. and 12-1/2-in. BF_3 chambers, and the FN-62 and FN-80 Hurst dosimeters. The output pulse from each of these detectors is fed to the preamplifier, where it is amplified and shaped. The shaped pulse is fed from the preamplifier to a DD2 linear amplifier.[16] In the system used with the thermal-neutron detectors, the signal then goes through the PHS section[17] of the DD2 amplifier to a fast decade scaler. For the fast-neutron system the amplifier signal is fed to an integrating circuit[18] where the pulse is weighted according to its amplitude. The output of the integrating circuit is the measure of the fast-neutron dose. The integrating circuit is described in the section below.

The preamplifier design in Fig. 18 is used with the 3-in. fission chambers and the phantom dosimeter (FN-82). In this case, since these instruments do not require the gain of the three-tube preamplifiers in Fig. 17, a single-tube preamplifier with a gain of about unity is used. The method of handling the

UNCLASSIFIED
2-01-057-0-460

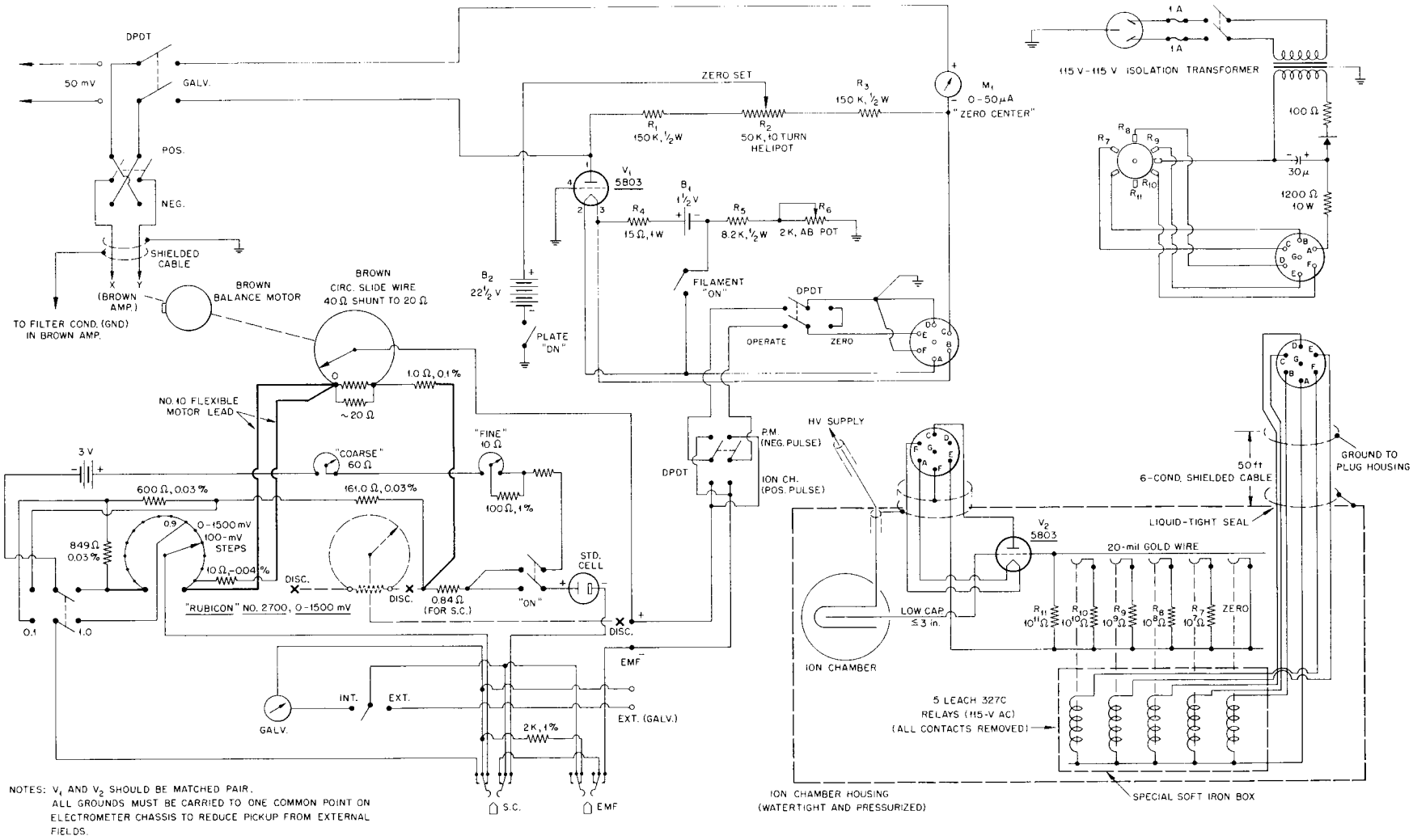

NOTES: V_1 AND V_2 SHOULD BE MATCHED PAIR.
ALL GROUNDS MUST BE CARRIED TO ONE COMMON POINT ON ELECTROMETER CHASSIS TO REDUCE PICKUP FROM EXTERNAL FIELDS.

Fig. 16. Semiautomatic Electrometer with Remotely Controlled Current Selector.

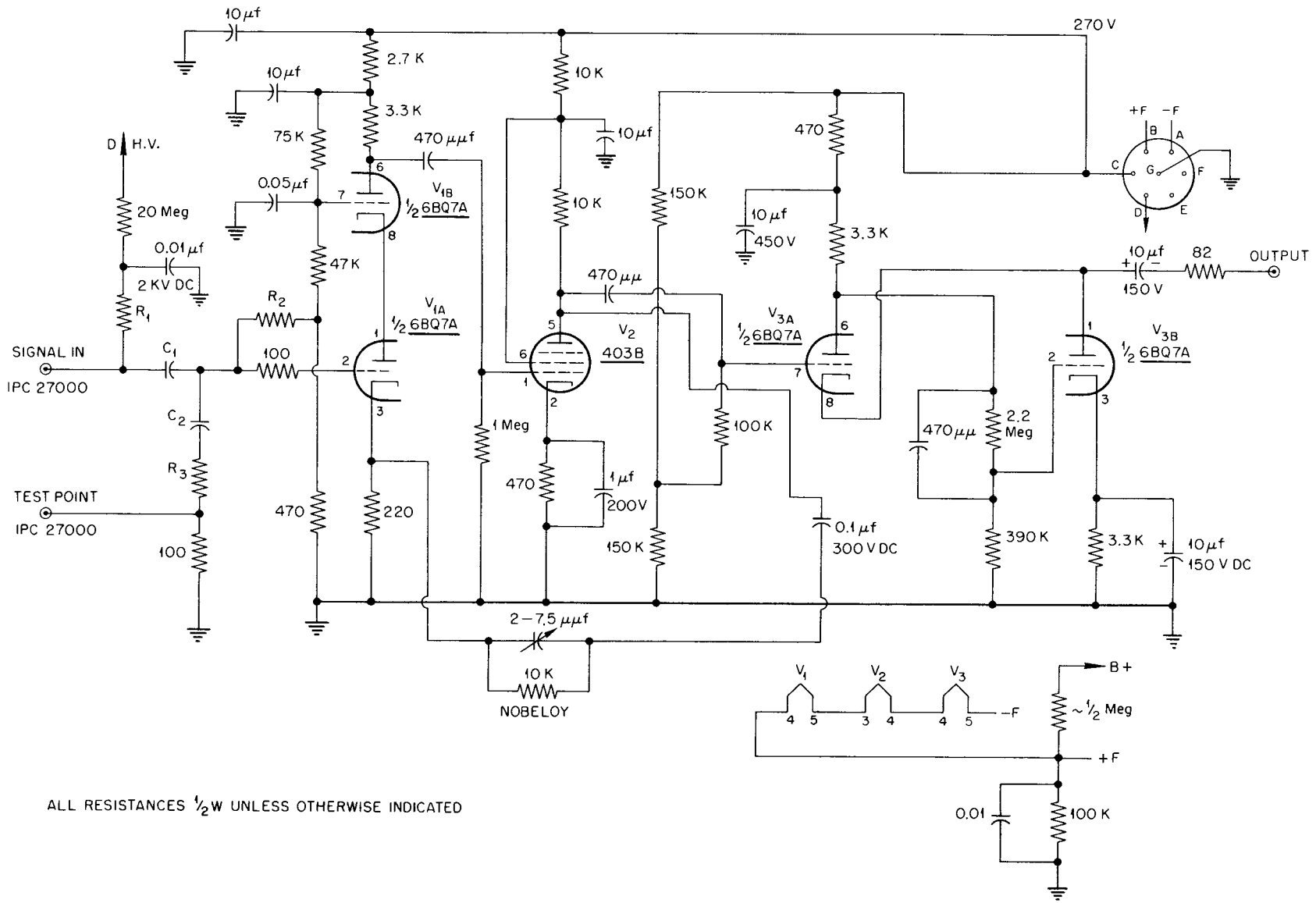

ALL RESISTANCES ½W UNLESS OTHERWISE INDICATED

Fig. 17. Preamplifier for ½-in. Fission Chamber, 8-in. and 12½-in. BF_3 Proportional Counters, and FN-62 and FN-80 Dosimeters.

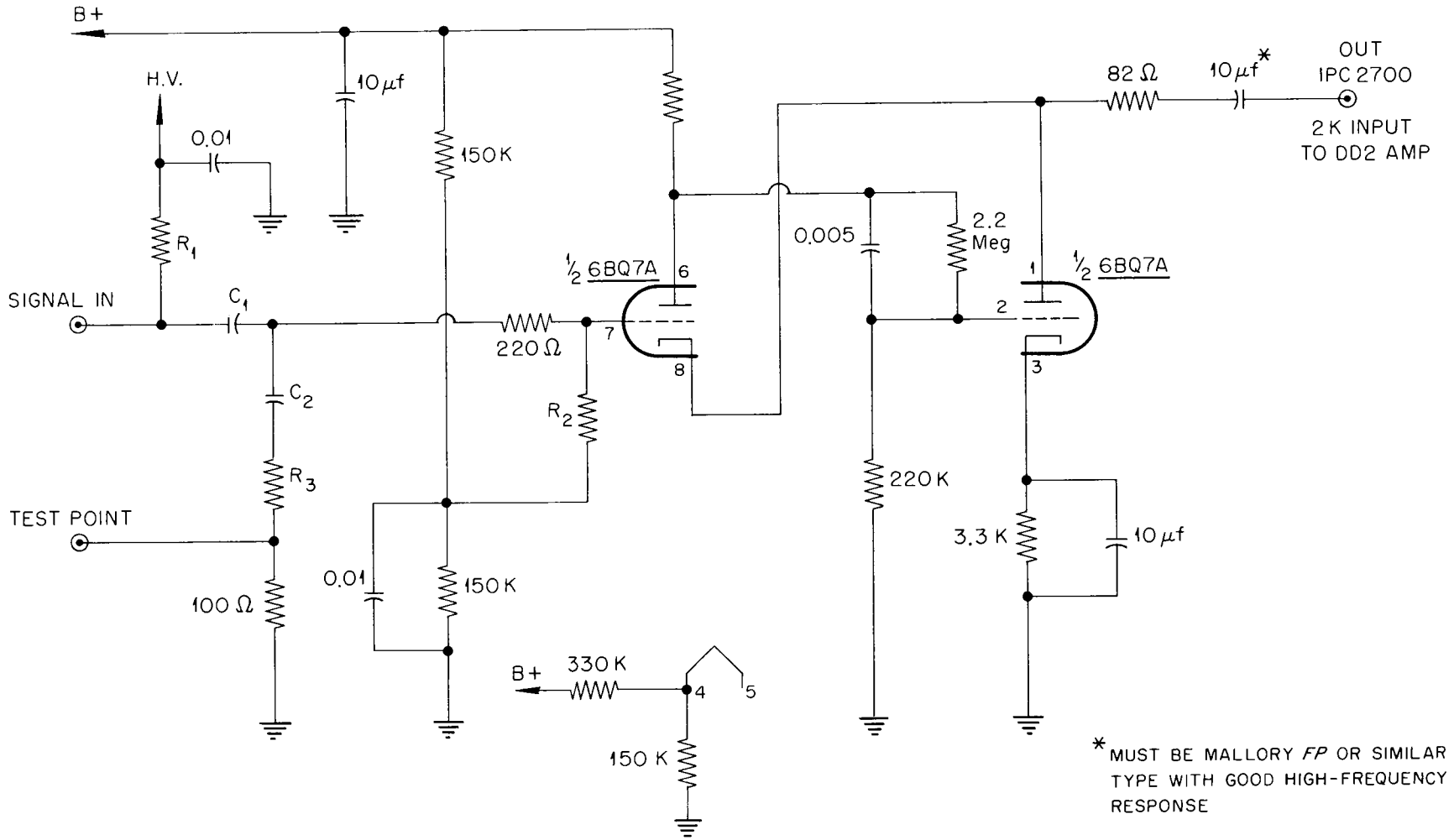

Fig. 18. Preamplifier for 3-in. Fission Chamber and Phantom Dosimeter (FN-82).

signal beyond the preamplifier is identical to that for the other neutron detectors.

"Read-Out" Instruments

Semiautomatic Electrometer. There are several techniques available for the measurement of currents of the magnitude produced by phototubes or ionization chambers. When these detectors are used in the gamma-ray fields present in the Lid Tank, the output currents are in the range of approximately 10^{-12} to 10^{-6} amperes. The most satisfactory method for measuring such currents is either with an electrometer or with a direct reading device such as a micromicroammeter. For the purposes of the LTSF, a micromicroammeter was found to be unsuitable because of the high fluctuations of the meter readings when weak fields of gamma rays were being measured. In order to overcome this difficulty, a new instrument, a semiautomatic electrometer (Fig. 16) designed by W. Zobel and P. T. Perdue of the LTSF, was incorporated in the gamma-ray measuring systems (Fig. 12).

The semiautomatic electrometer measures the current from the gamma-ray dosimeters and displays the signal on the strip chart of a Minneapolis-Honeywell self-balancing potentiometer (Brown recorder). The system includes devices for changing the sensitivity of the instrument (a flute switch), "bucking out" the signal from the dosimeter (a modified Rubicon potentiometer), and obtaining a continuous recording of the dosimeter's output signal (a Brown recorder).

The flute switch is indicated on the circuit diagram of the semiautomatic electrometer (Fig. 16) and is shown pictorially in Fig. 15. The original design used a single Ledex rotary switch* for remote selection of the proper grid. This switch was unsatisfactory, because the speed of

*Manufactured by G. H. Leland Inc., Dayton, Ohio.

switching and the wiping action of the switch caused variable errors as large as 300 mv. The new switch design utilizes 20-mil, 24-carat gold wire for the contacts and, instead of a sliding action in make-break, a direct point contact is used. The gold wire is used because it develops practically no contact potential to interfere with the operation of the instrument.

As stated previously, the flute switch and the electrometer tube (V_2 in Fig. 16) are located in the aluminum instrument housing. It was necessary to install the electrometer tube in this housing to keep the grid lead short. The precision grid resistors for this tube are mounted on the flute switch cover, thus making a very compact assembly.

All of the (shielded) cables from the instrument housing are brought out to a junction panel through a 1-in.-dia tygon tube. This tube is pressurized to avoid the possibility of the liquid in the Lid Tank leaking into the electronics. It was also found advisable to seal the cables, at the instrument end, with Biggs R-313 resin.* This was done to reduce gas losses. The gas filling for the detector, when needed, is introduced through a separate tube, also contained in the tygon tube.

The Rubicon portable precision potentiometer used in the electrometer circuit is a standard instrument which has been modified slightly to adapt it for use with the Brown recorder. As shown in Fig. 16, the circular slide-wire resistor (for fine control) in the potentiometer is disconnected from the circuit and the circular slide-wire resistor from the Brown recorder is substituted in its place. The 15-position step-switch used for coarse control is retained. The slide-wire resistor from the Brown recorder initially consisted

*Manufactured by Carl H. Biggs Co., 2255 Barry Ave., Los Angeles 64, California.

of two 40-ohm resistors in parallel, to make it exactly 20 ohms. Since a 10-ohm total resistance is needed to develop 100 mv across the slide-wire with a 10-mamp bridge current, an additional 20-ohm shunt is added across the slide-wire terminals. A 1-ohm loop in this shunt is used to make the final calibration adjustment. Since the original Rubicon circuit used an 11-ohm slide-wire resistance on the continuous adjustment, it was necessary to add a 1-ohm precision resistor in series with the Brown recorder slide-wire to prevent having to change the Rubicon calibration. The original output of the Rubicon (110 mv) was thus reduced to 100 mv, since a 110-mv chart was not available for the Brown recorder.

When the semiautomatic electrometer is used with the gamma-ray ionization chamber, as depicted in Fig. 16, the ionization current develops a voltage across the grid resistor of V_2 such that the grid of V_2 becomes positive, and V_2 conducts. The change in the plate voltage creates an unbalance between tubes V_1 and V_2 and this in turn is fed through the Brown amplifier and balance motor. The Brown potentiometer, in stabilizing itself, determines the proper voltage to be applied to the grid resistor of V_2 to re-balance the circuit. The plate voltages for V_1 and V_2 are furnished by the 22-1/2-v battery (B-2), and the 1-1/2-v battery (B-1) supplies the filaments.

When the semiautomatic electrometer is used with a photomultiplier [PM(A) or PM(B)], the above discussion is valid but the polarity of the input to the Brown amplifier and the polarity of the potentiometer must be reversed. This is accomplished by incorporating a double pole-double throw switch as indicated in Fig. 16.

Fast Decade Scaler. Figure 13 shows that the output from the thermal-neutron detectors is recorded on a decade scaler. This scaler was chosen for its high count rate capacity. A check of its resolving time (Fig. 19) with a Berkeley double pulse generator* indicates a resolving time of about 1.4 μsec. This is sufficiently fast for the applications at the LTSF, since the amplifier preceding it has a resolving time of only about 2.6 μsec.

Pulse Integrator. Because at the LTSF fast-neutron dose rates must be measured in the presence of other types of ionizing radiation, it is advantageous to determine the fast-neutron dose by examining the pulses produced in a proportional counter such as the Hurst dosimeter.[10] Since the pulse amplitude, and likewise the dose rate, is proportional only to the number of ion pairs formed by the incident radiation, regardless of the orientation of the ionizing track,[10,11] the dose rate can be determined by weighting the counter pulses according to their amplitude. This is done with the pulse integrator[18] which consists of a pulse sorter and two binary scalers. A block diagram of the complete system is shown in Fig. 14.

The pulse sorter is a series of integral discriminators which feed into the scaling stages of a binary scaling system. (A detailed analysis of the pulse sorter would be beyond the scope of the paper. For a complete discussion the reader is referred to the papers by F. M. Glass and G. S. Hurst,[18] J. E. Faulkner,[19] and E. B. Wagner and G. S. Hurst.[12]) Each discriminator tube is biased so that it will conduct only for pulses exceeding the level

---

*Manufactured by Berkeley Division of Beckman Industries, Inc., Richmond, California.

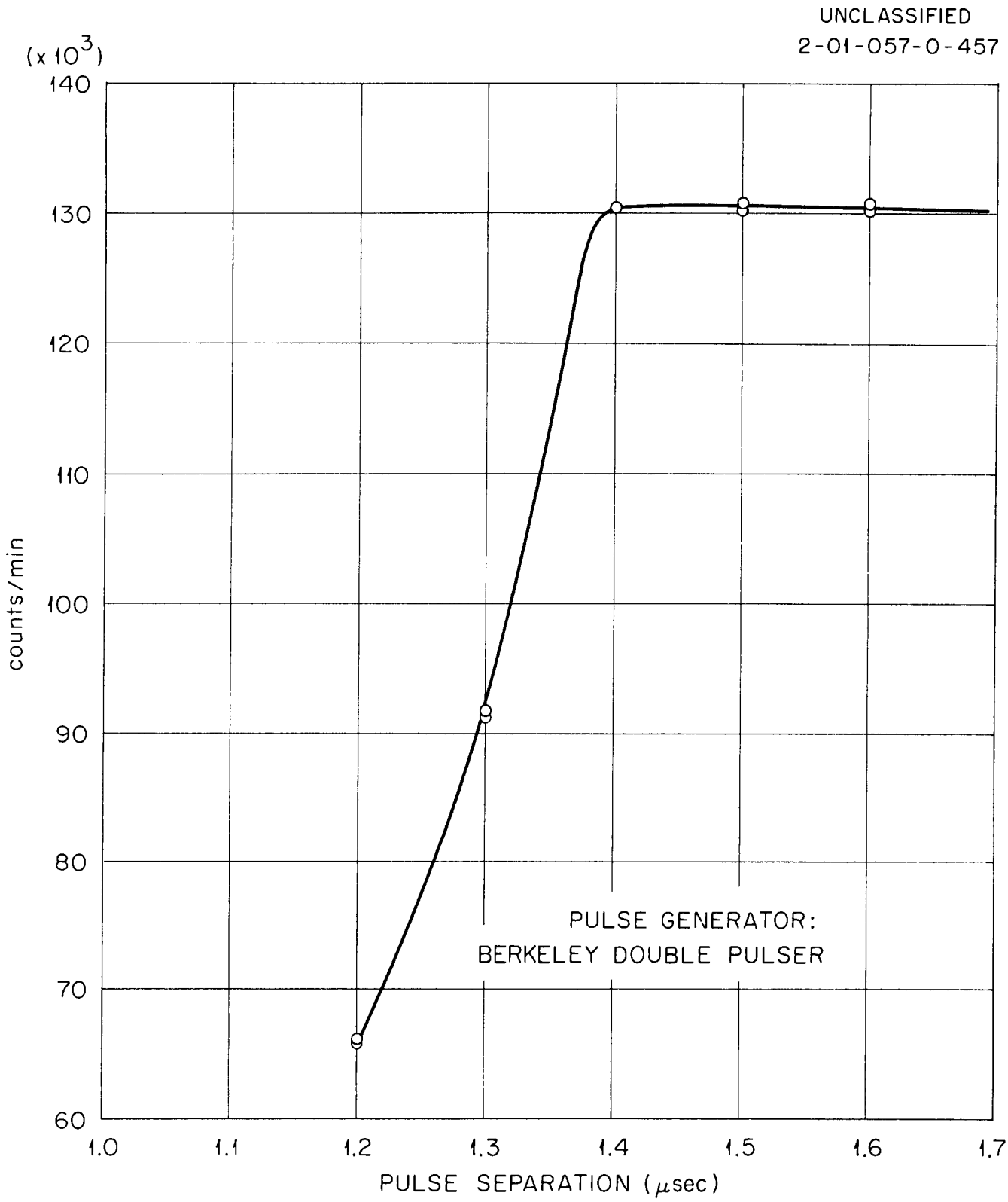

Fig. 19. Determination of Resolving Time of Fast Decade Scaler.

selected for that particular channel. The bias levels used at the Lid Tank are 6, 10, 14, 18, 30, 34, and 62 v. The lowest level, 6 v, was selected in order to discriminate against background, circuit noise, and gamma-ray sensitivity in the dosimeter. By using a bias a portion of the fast-neutron dose rate is also lost, but G. S. Hurst has shown[10] that this loss will usually be small.

The pulse integrator uses two modified Higinbotham scale-of-64 binary scalers[18] on the outputs of the pulse sorter (Fig. 14). Each of these modified scalers in turn feeds an ordinary binary scaler followed by a mechanical register. The additional scalers and mechanical registers increase the storage capacity of the system. Only the first four stages of the modified scalers have been changed, leaving the last two stages for storage. The practice of having the outputs of the pulse sorter feed into two scalers allows smaller intervals between consecutive discriminator voltages and greater storage capacity. As presently used, the four modified stages of one scaler are driven by the output of the 6-, 10-, 18-, and 34-v discriminators, and those of the other scaler by the output of the 6-, 14-, 30- and 62-v discriminator. Note that the output of the 6-v discriminator drives the first modified stage of both "legs" of the scaling circuits. Counting the output of the 6-v discriminator twice reduces the error in the integrated dose.

The principle involved in a pulse integrator of this type is simply that the pulses from the dosimeter are weighted according to their amplitude, and each pulse triggers a number of counts in the scalers in proportion to the pulse amplitude. The addition of the total number of counts in the four scalers gives the integral of the total dose.

The upper limit on the fast-neutron flux in which this instrument can be operated seems to be determined by both the Hurst dosimeter and the binary scalers. In the arrangement used at the LTSF, this limit, for both components, appears to be reached in a field of about 2.7×10^3 ergs/g·hr of fission spectrum neutrons. In stronger fields, difficulties due to pile-up begin to appear.

Auxiliary Instruments

All measurements at the LTSF are normalized to a source plate power of 5.22 watts.[3] Since the power of the source plate is directly related to the thermal-neutron flux incident upon it, a means of continually monitoring this incident flux is employed. It is not sufficient to merely normalize to a constant reactor power as the flux patterns within the reactor, and consequently within the Core Hole, will vary with the positions of the control rods. The Core Hole flux is monitored by a boron-lined ionization chamber located on the centerline of, and within, the Core Hole. The performance of this chamber is checked periodically by a comparison with the activation of a gold foil positioned on the reactor side of the boral shutter behind the source plate. The ratio of the monitor reading to the gold foil activation varies by no more than 1.5% from one month to the next and has remained within 5% for over 1-1/2 years. The output of the ionization chamber is fed through a resistor-capacitor network to a Minneapolis-Honeywell self-balancing potentiometer (Brown recorder). At the time the new source plate (SP-2) was installed, the Brown recorder was adjusted to read unity when the Core Hole flux was at that level which produced 5.22 watts of power from the source plate. While data are being obtained with the detectors or gold foils, a continuous recording of the Core Hole flux is

displayed on the Brown recorder chart. With this system, all data are normalized to the "constant" source plate power of 5.22 watts.

The mercury pulser indicated in the block diagrams in Figs. 13 and 14 is a Detectolab precision pulser, Model DZ-16. It is used for calibration and testing purposes as discussed in Section III. The pulser output is fed into the preamplifier at the test input and shaped to simulate the detector output pulse.

The logarithmic count rate meter (LCRM) is used to monitor the dose rate and is a useful indicator of noise bursts. It is also utilized in the setup of the detectors. It is driven by the output of the PHS unit of the linear amplifier.

A list of the ORNL drawings pertaining to the instruments and circuits discussed in this report is given in Table 1.

III. OPERATION

Detector Calibration Techniques

Determination of Center of Detection. Whenever an attempt is made to accurately measure the radiation in an attenuating medium, precise determinations of the centers of detection of the measuring instruments must be made. This becomes increasingly important in media in which the radiation level drops off rapidly, i.e., in highly attenuating media. In these media an error of < 1 cm can introduce fairly large errors in the dose or flux measurements. As an illustration, an error of 1 cm in the center of detection of the LTSF fast-neutron dosimeters can result in an error of about 15% in the dose measurement.

Table 1. Drawings of LTSF Instruments

Instrument	ORNL Drawing Number
Pulse Integrator	
Binary Scalers (Scale-of-64)	Q-762 (Mfgd. by Nuclear Inst. and Chem. Corp.) (Two) Atomic Inst. Co. Model 101-M (Two)
Pulse Sorter	Q-941
DD2 Linear Amplifier	Q-1593-1-8
Differential and Integral PHS Circuit	Q-1593-9
Logarithmic Count Rate Meter	Q-851
Precision Pulser	Detectolab Model DZ-16
L and N Potentiometer	Q-973
Fast Decade Scaler	Q-1743
Semiautomatic Electrometer	See Figs. 15 and 16, this report
1/2-in. Fission Chamber	Q-846-4,5
3-in. Fission Chamber	Q-1059
8-in. BF_3 Counter	Q-369 (Detail Dwgs.); Q-954 (Housing)
12-1/2-in. BF_3 (Single-Barrel)	Q-804 (Detail Dwgs.); Q-954 (Housing)
12-1/2-in. BF_3 (Double-Barrel)	Q-804 (Detail Dwgs.); Q-954 (Housing)
FN-62 (Hurst - 3 Chambers)	Q-1381
FN-80 (with Self-Contained α Source)	Q-1696
FN-82 (Phantom)	Q-1329
PM(A) - Anthracene Crystal	See Fig. 3, this report
PM(B) - Anthracene Crystal	See Fig. 3, this report
50-cc Ionization Chamber	Q-1809
High-Voltage Power Supplies	
Gamma-Ray System	Hamner, Model N 401 ($\pm$0-2000V)
Thermal-Neutron System	Q-548A(0-3000V)
Fast-Neutron System	Q-941 (0-2500V)
Preamplifiers	
Thermal-Neutron Detectors	See Figs. 17 and 18, this report
Fast-Neutron Dosimeters	See Figs. 17 and 18, this report

The shift in the center of detection occurs because, in most cases, the attenuation of the surrounding medium is different from that of the detector itself. Thus, the center of detection will be shifted towards or away from the source of radiation. This subject has been treated in a report by H. E. Hungerford[20] for BF_3 counters, graphite-walled ionization chambers, and the Hurst dosimeter. Hungerford calculated the position of the center of detection for each of these instruments, basing his calculations on the geometry of the counter, the ratio of the collimated to uncollimated radiation, and the attenuation characteristics of the surrounding medium.

The LTSF has made a limited examination of the possibility of determining the center of detection experimentally. The instruments tested were the 50-cc ionization chamber and the PM(A) gamma-ray dosimeter. Instrument readings were obtained in air at various distances from a Co^{60} source to permit comparison with an "inverse-square" relationship. Several sets of data were taken at each instrument position. The data from these measurements were evaluated by Dr. D. A. Gardiner, Statistics Section, Mathematics Panel, who used the method of least squares to obtain an estimate of the distance of the center of detection from the geometrical center of the instrument. The model he used was the expression

$$S_{ij} = \frac{C}{(Z_i + a)^2}$$

where

S_{ij} = j-th measurement of the strength determined by the instrument at the i-th distance from the source,

Z_i = i-th distance of the geometric center of the detector from the source,

C = a constant,

a = distance of the center of detection from the geometric center of the detector.

The preliminary results of this work gave an estimate of a = -0.185 cm for the 50-cc ionization chamber. Two estimates were obtained for the PM(A) corresponding to two different methods used to read the instrument current. By using a Beckman micromicroammeter, a value of a = -0.376 cm was obtained, and by using an electrometer to measure the phototube current, a value of a = -0.675 cm was obtained. The 95% confidence intervals associated with these estimates are: -0.362 to 0 cm for the 50-cc ion chamber; -0.725 to 0 cm for the Beckman recorder; and -1.28 to 0 cm for the electrometer. It must be emphasized that these figures are preliminary and that the simple model used would not be valid for a determination of the center of detection when the detector is operated in a medium such as water or oil as is the custom at the LTSF.

Since the error intervals on the above measurements do not exclude the geometric center of the instruments, and also since experimental data are not available for the other instruments in media other than air, the center of detection of all instruments is taken at the geometric center for purposes of data evaluation.

Calibration of Gamma-Ray Dosimeters. In order to calibrate the gamma-ray dosimeters the semiautomatic electrometer must first be calibrated. This is quite simple and is required infrequently (approximately every two to three

months unless the equipment is moved). The circuit is initially balanced by attaching another potentiometer to the output terminals of the Rubicon potentiometer. In this way the outputs of the potentiometers buck each other. With both potentiometers "on," the mechanical zero on the Brown recorder is adjusted until at "zero" on the Brown the standard potentiometer just reads "zero" using a galvonometer for balance, or null, determination. When this condition is met, the Brown scale calibration can be made. The Brown is manually rotated to read 95 to 100 mv and the standard potentiometer is set at the same reading. The 2-ohm shunt in the Brown potentiometer is then adjusted until the galvonometer is at zero. Each time the 20-ohm shunt is adjusted, the Rubicon must be restandardized. When this adjustment has been made, different points on the Brown and the standard potentiometers are compared for accuracy. This comparison should indicate a variation of no more than ± 0.1 mv. The final step in the calibration consists of checking multiples of 100 mv with the 15-position coarse control switch to confirm that the Rubicon potentiometer has the same current flow in each switch position. If this has changed, the 1-ohm precision bridge resistor in the Rubicon must be changed and the entire calibration repeated. This should not be necessary if the 1-ohm resistor has been carefully selected. Care must also be taken in selecting the two 5803 electrometer tubes, V_1 and V_2 in Fig. 16. These tubes must be matched pairs and should be aged. If they vary greatly in emission, it will be difficult to balance the "zero" potentiometer in its range.

The gamma-ray dosimeters, PM(A), PM(B), and 50-cc ionization chamber, are all calibrated against a standard radium source. This source was calibrated by

the National Bureau of Standards on January 15, 1953, and found to have a strength of 42.4 ± 0.3 mr/hr at a distance of 1 meter. The instrument to be calibrated is attached to an aluminum stand and the source is placed in a source holder attached to a ruled aluminum rod (Fig. 20). The calibration is performed with that electrometer grid resistance which will allow a reasonable range of source-to-detector distance for the calibration. For a PM tube, the source-to-detector distance is varied from about 50 to 130 cm. For the 50-cc ion chamber this distance is about 20 to 40 cm. The instrument current is measured on the electrometer at several points through this range and a factor is calculated at each point for conversion of the measured current to the known tissue dose rate in ergs/g·hr. The average of these factors is then used to convert the measurements taken in the Lid Tank from current to dose.

The instrument being calibrated and the radium source are both positioned 4 to 5 ft above the floor, depending on the instrument, to minimize the effect of scattered radiation on the calibration. The background radiation is eliminated by zeroing the electrometer, with the source removed, before starting the calibration. The instruments are connected to the power cables and a low voltage is applied for approximately 1 hr before calibrating to allow any instability due to warmup to settle out. This procedure is important with the gamma-ray detectors because of time required for the electrometer tubes to attain equilibrium.

Anthracene crystals are known to be somewhat neutron sensitive. However, as long as the neutron dose rate at the point of measurement is low compared to the gamma-ray dose rate, the contribution due to the neutrons will be very small compared to the true gamma-ray dose rate. A detailed study of the neutron sensitivity of anthracene crystals was made at Convair, Fort Worth, Texas by K. R. Spearman.[21]

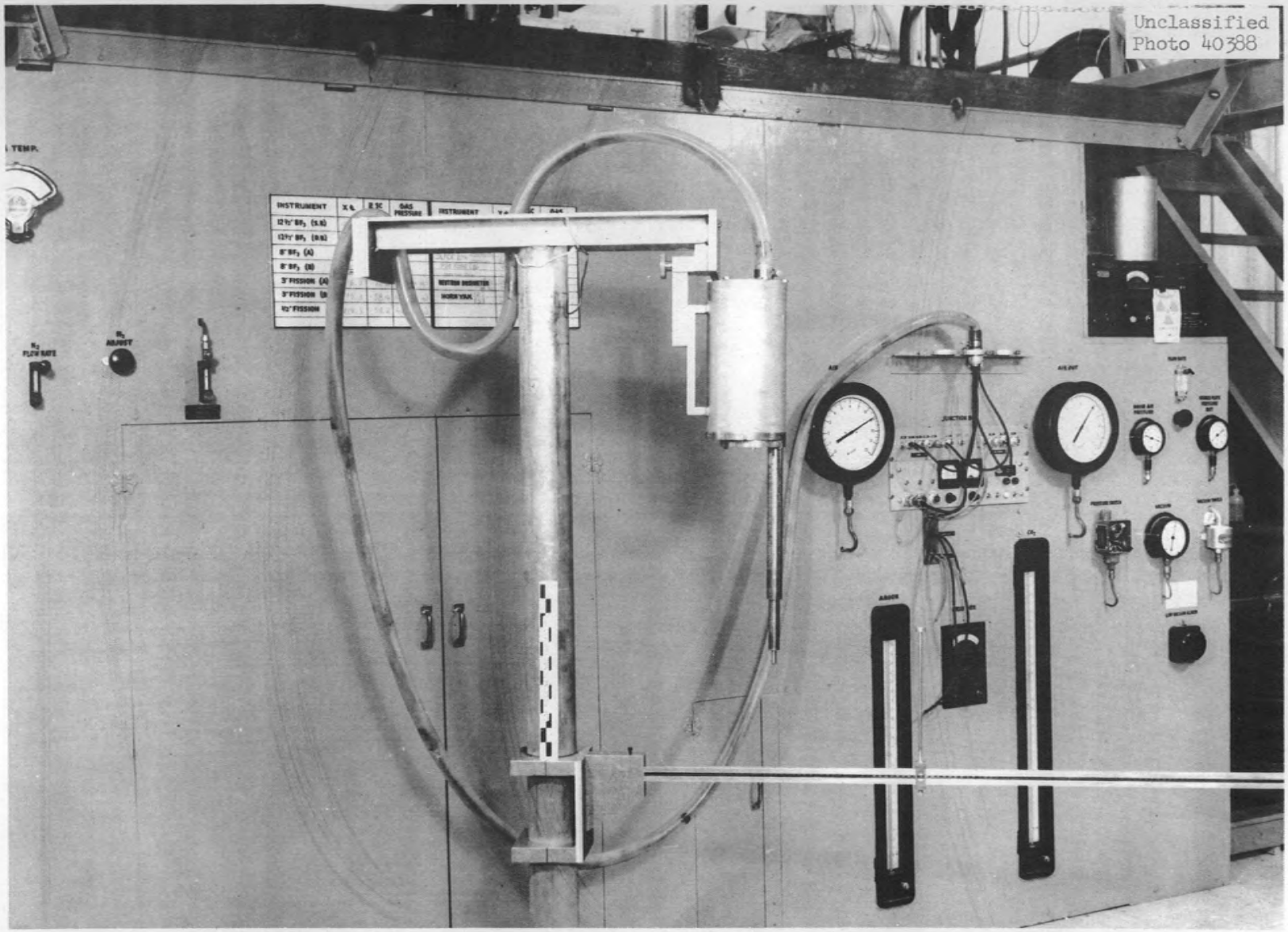

Fig. 20. Instrument Calibration Stand.

Calibration of Thermal-Neutron Detectors. The thermal-neutron data taken at the LTSF are considered to be somewhat more reliable than the gamma-ray and fast-neutron data, since fluxes measured with the thermal-neutron detectors are normalized to those measured with gold foils. The foils used for this purpose are 1 cm square and 2 mils thick. Both bare and cadmium-covered foils are used, the covers being 20 mils thick, and exposures are made both while the source plate shutter (shown in Fig. 1) is open and while it is closed. The shutter-closed activation is subtracted from the shutter-open activation to eliminate the background. The activation of the individual foils is determined by the ORNL Isotopes Division, and from these activations the thermal-neutron flux is calculated by a method suggested by W. R. Burrus.[22]

Prior to an experiment, gold foils, which are held by a lucite holder, are exposed in the water of the Lid Tank at distances of 4, 10, 20, 30, 40 and 50 cm from the source plate.* These distances are sufficient to overlap with the flux regions covered by the fission chambers and the 8-in. BF_3 counter. The measurements made with these instruments are then normalized to the gold foil fluxes to obtain a conversion factor. Since the 12-1/2-in. BF_3 does not overlap with foil measurements, this detector is normalized to the other detectors.

The procedure followed in setting up the thermal-neutron instruments for operation is somewhat more complicated than the procedure for the gamma-ray

---

*If an experiment is to be performed in a liquid medium other than water, for example, oil or borated water, the liquid is contained in the LTSF "configuration" tank, and the foil exposures are made within this tank. The configuration tank is a steel tank which can be positioned within the Lid Tank. The tank wall adjacent to the source plate contains an aluminum window that attenuates the source plate radiation only slightly.

dosimeters. Maximum warmup time for the preamplifier is allowed. The fission chambers are thoroughly flushed with the argon-CO_2 mixture, and the pressure is then adjusted to the proper equilibrium value (14 in. Hg). The procedure followed in the calibration will vary, depending on the time since the instrument was previously used. If it has been used recently a shorter setup procedure can be followed, but if it has been idle for some time the procedure used is longer.

For the proper setup of any of the thermal-neutron detectors, three instrument settings, besides the instrument voltage, must be determined. These are the gain setting on the DD-2 amplifier, the PHS or bias setting, and the amplitude of the pulse generator output. The detector is placed in the Lid Tank, or in the case of the BF_3 counters, either in the Lid Tank or in a paraffin "pig" containing a Ra-Be source. The available Ra-Be source does not produce a count rate high enough to be used with the fission chambers. If placed in the Lid Tank, the counter is positioned so as to give a moderately high count rate. The voltage is adjusted to the proper value as established from a voltage curve (Fig. 21), and a gain curve with the DD-2 amplifier is then established with the PHS bias set at a value somewhat above the background level (Fig. 22). A suitable gain setting is chosen from the flat portion of this curve, and a PHS curve (Fig. 23) is obtained. A PHS setting is selected at some point on the flat portion of the curve, somewhat above the sharp break caused by the gamma-ray sensitivity of the instrument. For the detectors at the LTSF, a PHS setting corresponding to a 25-v bias has been found satisfactory.

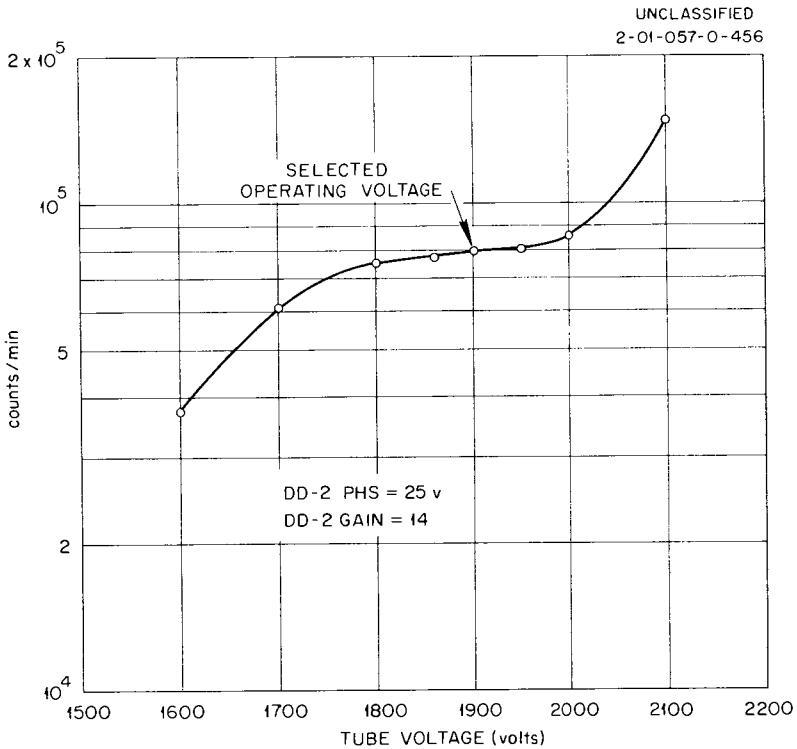

Fig. 21. Sample Voltage Curve for the 12½-in. BF_3 Proportional Counter (Single Barrel).

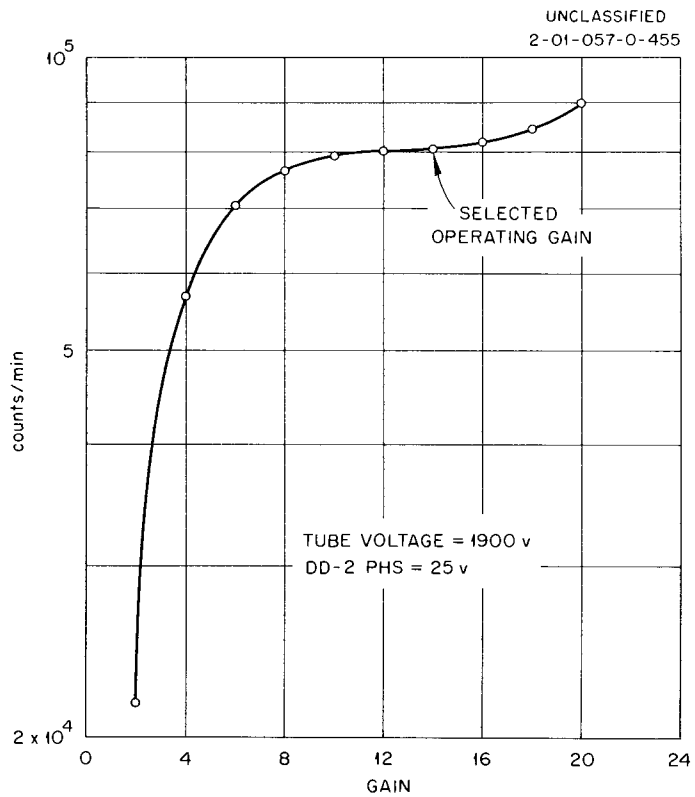

Fig. 22. Sample Gain Curve for 12½-in. BF_3 Proportional Counter (Single Barrel).

It must be pointed out that the use of the pulse generator only monitors changes in the electronics and by its nature can give no information about the condition of the detector. However, most thermal-neutron traverses require the use of at least two thermal-neutron detectors, and the probability of both failing simultaneously is quite low. Since the data from the different instruments must agree in the region of overlap, detector failure usually manifests itself by lack of such agreement.

The detector is then moved to the rear of the tank (away from the source plate) where the background count is very low. The pulse generator output is connected to the preamplifier of the instrument, and the output pulse adjusted to the amplitude which just triggers the scaler. This pulse generator setting is recorded for future use because, after the above procedure has been completed, subsequent preparation of the detector for use is simplified to merely setting the pulse generator and the PHS at these values and then readjusting the gain until the scaler just triggers. If the gain shifts a large amount from one setup to the next, it is advisable to run a new PHS curve, or perhaps even to repeat the entire procedure. Ordinarily, a check of the count rate at the predetermined PHS, gain, and pulse generator settings suffices.

Calibration of Fast-Neutron Dosimeters. For the initial calibration of the FN-62 and FN-82 dosimeters, the output of the linear amplifier is switched from the pulse integrator to the fast decade scaler. By using a Po-Be source (approximately 30 curies of polonium) and a suitable amplifier gain, a counts/min vs voltage curve is obtained and an operating voltage selected. A PHS curve is then taken with this voltage and the same amplifier gain. The

amplifier gain is then adjusted until the sharp break in the PHS curve due to gamma-ray sensitivity falls below the bias level of the lowest discriminator of the pulse sorter (6 v). This procedure establishes an approximate gain. The detector is then placed in the Lid Tank and positioned in the highest fast-neutron field to be measured. Additional PHS curves (Fig. 24) are obtained in this field, and the gain is adjusted until the sharp break in the curve again falls just below the 6-v level. It may be necessary to measure this curve several times before the proper gain is established. The detector is then removed from the tank and the output of the pulse generator connected to the preamplifier. With the gain setting just established and the PHS set at 25 v for the FN-62, or 6 v for the FN-82, the pulse generator output is adjusted until the decade scaler just triggers. The 6-v level is used for the FN-82 because the preamplifier in this instrument has less gain than that in the FN-62 and because it is desirable to keep the pulse generator output in the same range. The values of 25 and 6 v are used rather arbitrarily because they are known to be above the background level. The gain and pulse generator settings are recorded to facilitate future calibrations. The pulse generator is then disconnected, the output of the amplifier switched to the pulse integrator and, using the Po-Be source, a series of about five dose-rate measurements are made at different distances in air. These are averaged and the factor to convert the counts per minute to the dose rate (ergs/g·hr) is calculated. This factor is used to convert the measurements taken in the Lid Tank to dose rates.

For successive uses of the detectors, the above procedure can be considerably shortened. It will only be necessary to set the predetermined voltage and

pulser settings and, at a PHS of 25 or 6 v, as appropriate, adjust the gain until the decade scaler just triggers. A large shift in the gain from one calibration to the next is an indication of a malfunction in the electronics. A large change in the calibration factor indicates a malfunction in the detector. It is also advisable to recheck the calibration of the instrument after its removal from the tank. The calibration factors obtained before and after the instrument traverse should agree within 5%.

The initial calibration of the FN-80 is somewhat more complicated than that of the other fast-neutron dosimeters. After the FN-80 is mounted on the instrument calibration stand, the first step is to check the background counts with the built-in alpha source shielded from the sensitive volume by the movable shutter. The background should be zero, or nearly so. If not, the most likely source of trouble is contamination by the alpha source. As in the calibrations of the other instruments, the DD-2 amplifier output is fed to the decade scaler. Then, with the counter exposed to the self-contained alpha source, the gain of the DD-2 is adjusted so that, at a PHS setting of 70 v, essentially no counts are recorded by the scaler. This PHS value of 70 v was determined by an examination of the pulse spectrum as displayed on an oscilloscope. The maximum pulse height appears to cut off sharply at about this value. With this gain setting a PHS curve is obtained using the alpha source. A typical curve is shown in Fig. 25.

The next step is to pick a point about midway on the steep section of the PHS curve (Fig. 25). For the instrument in use at the LTSF this point corresponds to a PHS of 67 v and a count rate of about 480 cpm. A pulse generator setting that will just trigger the decade scaler for this gain and PHS setting is then determined. This completes the setup of the instrument.

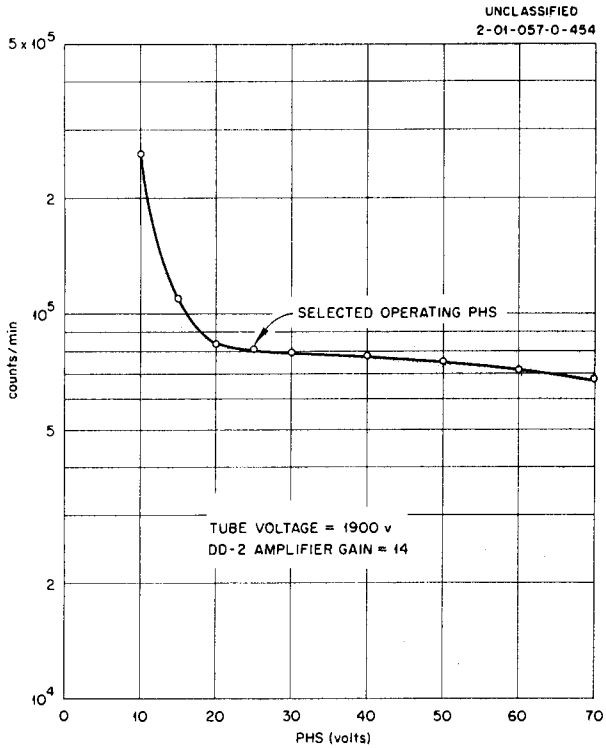

Fig. 23. Sample PHS Curve for 12½-in. BF_3 Proportional Counter (Single Barrel).

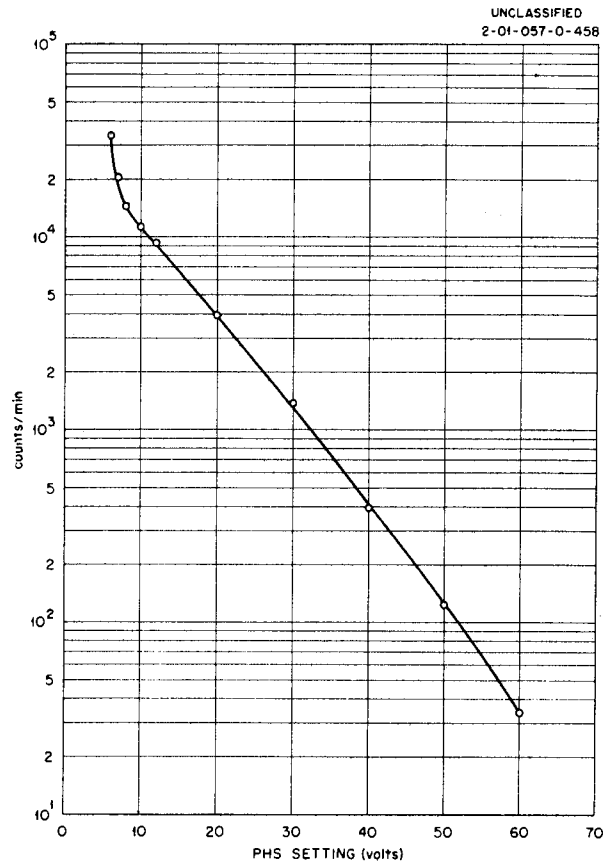

Fig. 24. Sample PHS Curve for FN-62 Fast-Neutron Dosimeter in Lid Tank.

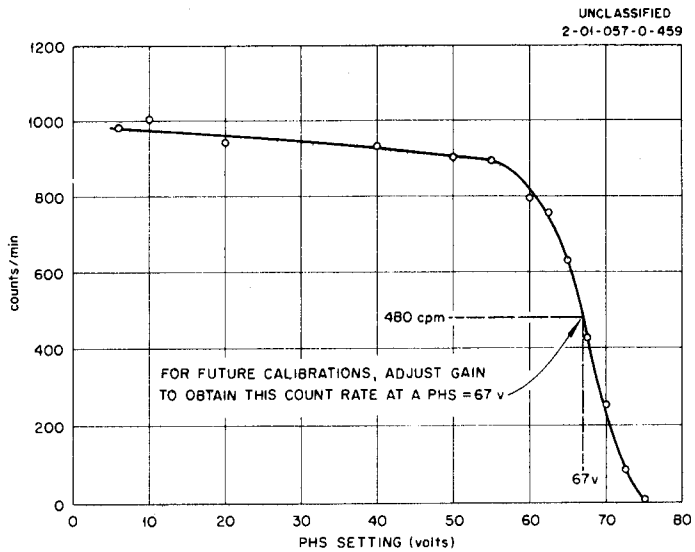

Fig. 25. Sample PHS Curve for FN-80 Fast-Neutron Dosimeter Using Self-Contained Alpha Source.

For operation in a neutron field the next step is to double the gain. This accounts for the difference in pulse heights due to alpha particles and neutron-induced recoil protons. An alpha particle produces a pulse of approximately twice the maximum amplitude of a proton-produced pulse.

The conversion factor from counts per minute to dose rate is obtained as described above. It is also good practice to run a PHS curve with the instrument placed in the highest field to be measured in the Lid Tank to insure that gamma-ray pileup does not occur.

As in the case of the other instruments, if the detector has been used recently it is not necessary to repeat this entire procedure every time the instrument is used. A simple method is to use the previously established PHS and gain settings and, using the alpha source, to verify that the count rate is close to 480 cpm. With the pulse generator adjusted to the previously established setting, the decade scaler should then just trigger. The use of both the pulse generator and the self-contained alpha source gives two independent checks on the proper functioning of the system. The pulse generator is a check on the electronics and the use of the alpha source checks the operation of the complete system. If these checks indicate proper functioning, only the conversion factor from the Po-Be source must be obtained. These conversion factors should be fairly constant from day to day.

Ranges of Systems

The maximum and minimum radiation fields measured with the detectors described in this report are shown in Table 2. The upper limit on the ranges of

Table 2. Ranges of Sensitivity of Various Detectors at Indicated Pressures

Detector	Gas Pressure	Approximate Range of Sensitivity
PM(A) - Anthracene Crystal on a RCA 5819		2×10^4 to 1×10^1 ergs/g·hr
PM(B) - Anthracene Crystal on a RCA 6655		6×10^2 to 2×10^0 ergs/g·hr
50-cc Ionization Chamber	18 in. Hg(CO_2)*	$>5 \times 10^4$ to 1×10^1 ergs/g·hr
Gold Foils (2 mil; 1 cm^2)		∞ to 5×10^3 neutrons/cm^2·sec
1/2 in. Fission Chamber	14 in. Hg (Argon-CO_2)*	2×10^8 to 5×10^4 neutrons/cm^2·sec
3 in. Fission Chambers (A and B)	14 in. Hg (Argon-CO_2)*	2×10^6 to 10^2 neutrons/cm^2·sec
8 in. BF_3 Counter (A)***	2 cm Hg Argon; 6 cm Hg $B^{10}F_3$	3×10^3 to 5×10^0 neutrons/cm^2·sec
8 in. BF_3 Counter (B)	2 cm Hg Argon; 6 cm HG $B^{10}F_3$**	7×10^4 to 7×10^1 neutrons/cm^2·sec
12-1/2 in. BF_3 Counter (Single Barrel)	2-1/2 cm Hg Argon; 12-1/2 cm Hg $B^{10}F_3$*	4×10^3 to 1×10^{-1} neutrons/cm^2·sec
12-1/2 in. BF_3 Counter (Double Barrel)	Each tube: 30 cm Hg ($B^{10}F_3$)**	1×10^2 to 1×10^{-1} neutrons/cm^2·sec
FN-62 (Three Chamber)	1 atm (Ethylene)**	5×10^1 to 1×10^{-2} ergs/g·hr
FN-80 (with Self-Contained α source)	1 atm (Ethylene)**	2×10^2 to 3×10^{-2} ergs/g·hr
FN-82 (Phantom)	1 atm (Ethylene)**	7×10^3 to 5×10^{-1} ergs/g·hr

*Denotes gage pressure.
**Denotes absolute pressure.
***Not used.

the fast-neutron dosimeters is determined primarily by the gamma-ray dose. This limit is also somewhat determined by the resolution of the counting equipment, but it is usually the effect of gamma-ray pileup that is predominant. The upper limit for the thermal-neutron detectors is determined by the resolving time of the fast decade scaler. The upper limit for the photomultiplier systems is determined by the well-known gain shift in high fields; the upper limit of the 50-cc ionization chamber is not reached by the gamma-ray fields encountered in the Lid Tank.

The lower limit of these instruments is determined primarily by the amount of time one is willing to spend on taking data for one point. The practice followed at the LTSF is to limit the maximum time for one shutter-open reading to about 15 min. The time for the corresponding shutter-closed reading would be about 5 min. The shorter time for the shutter-closed readings is permissible because the ratio of shutter-open to shutter-closed readings is about 20:1. This means that a fairly large error in the shutter-closed reading will have only a small effect as the final data are obtained by subtracting the shutter-closed from the shutter-open readings.

Data Reliability Estimates: Possible Sources of Errors

The errors in the LTSF data are somewhat dependent on the type of data being taken and the type of shield configuration that is being investigated. As stated previously the thermal-neutron data are the most reliable because of the more accurate method of calibration and a better understanding of the response of thermal-neutron detectors in mixed fields of radiation. The accuracy of

the calibration of the gamma-ray and fast-neutron detectors is dependent on the linearity of the energy response, the calibration of the standard sources, and particularly, the validity of performing the instrument calibration in air while the instruments are to be used in a different medium. This latter question should be resolved when the center of detection shift in the medium is determined.

The statistical errors can be held to a low figure by merely running long counts. The practice at the LTSF is to keep this error to about ±2% when the count rate is high enough to obtain this accuracy in a reasonable length of time. Behind highly attenuating shield configurations the field strengths may be too low to allow this accuracy.

One of the main factors favoring the reliability of the LTSF thermal-neutron data is the reproducibility of these data. In the region also covered by gold foil data, the reproducibility of the data taken with thermal-neutron detectors is about ±5%. In the weaker fields more distant from the source plate, this figure is about ±10%. The reproducibility of the gamma-ray data is approximately ±10% throughout the range of the detectors. The over-all figure for the fast-neutron detectors is approximately ±10% to ±15%. These percentage errors include the errors inherent in measurements of the position of a shield configuration in the Lid Tank. The errors in the so-called "standard curves" in water, borated water, and oil would be somewhat less since no shields were present during these measurements.

Appendix A

Calculation of the Field Tube Potential of the
FN-80 Fast-Neutron Dosimeter

With the proper ratio of voltages applied to the center wire and the field tube of the FN-80, the sensitive, or effective, volume of the chamber is defined by the region indicated in Fig. A-1. This volume can be calculated from the geometry in Fig. A-1 and turns out to be roughly 60 cu cm.

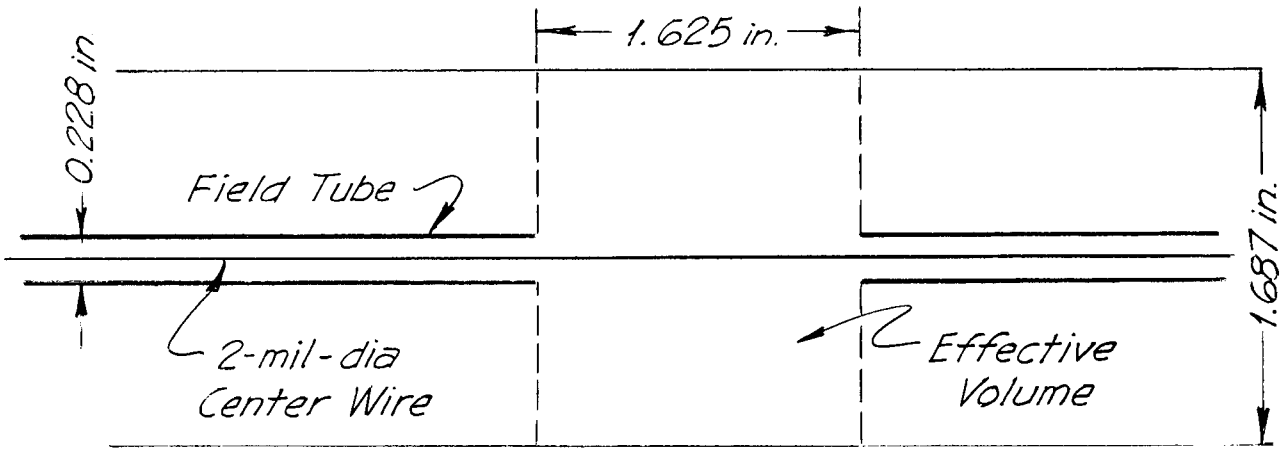

Fig. A-1.

The voltage required at the center wire of the detector is a function of the gas pressure. For the 1 atm of ethylene used at the LTSF, a center wire voltage of 2420 v has been selected. The procedure utilized to determine the ratio of center wire voltage to the field tube voltage has been described by Loeb[23] and outlined below. Since the field tube potential must be the same as would exist at the same point, due to the center wire voltage, if the field tube were not present, we obtain from Loeb:

$$V(R) = V_o \frac{\ln (b/r)}{\ln (b/a)} \qquad (1)$$

where

V_o = voltage on center wire,

$V(R)$ = voltage at any point R with outside of chamber grounded,

a = radius of center wire = 1 mil,

b = radius of ground electrode = 1.687 in./2,

r = radius of field tube = 0.228 in./2.

Therefore:

$$V(r) = V(0.114) = V_o \frac{\ln \frac{1.687}{0.228}}{\ln \frac{1.687}{0.002}} = 0.297\ V_o$$

or

$$V(r) \simeq 0.3\ V_o$$

Hence, the field tube voltage is approximately 0.3 times the center wire voltage and, for the detector used at the LTSF, a field tube voltage of (2420) (0.3) $\simeq$ 725 v is used.

Appendix B

LIST OF FIGURES

Fig. No.	Title	Pg. No.
1	The Lid Tank Shielding Facility	2
2	Instrument Control Racks	3
3	PM(B) Gamma-Ray Dosimeter	6
4	50-cc Spherical Ionization Chamber	8
5	Foil Holder	10
6	1/2-in. Fission Chamber	11
7	3-in. Fission Chamber (A)	12
8	8-in. BF_3 Counter	14
9	Three-Section Fast-Neutron Proportional Counter Dosimeter (FN-62)	16
10	Absolute Fast-Neutron Proportional Counter Dosimeter (FN-80)	17
11	Phantom Fast-Neutron Dosimeter (FN-82)	18
12	Gamma-Ray Dose Rate Measurement System	21
13	Thermal-Neutron Flux Measurement System	22
14	Fast-Neutron Dose Rate Measurement System: Pulse Integrator	23
15	Flute Switch	24
16	Semiautomatic Electrometer Circuit with Remotely Controlled Current Selector	26
17	Preamplifier for 1/2-in. Fission, 8-in. and 12-1/2-in. BF_3 Proportional Counters, and FN-62 and FN-80 Dosimeters	27
18	Preamplifier for 3-in. Fission Chamber and the Phantom Dosimeter (FN-82)	28
19	Determination of Resolving Time of Fast Decade Scaler	33
20	Instrument Calibration Stand	42

Fig. No.	Title	Pg. No.
21	Sample Voltage Curve for a 12-1/2-in. BF_3 Proportional Counter (Single Barrel)	45
22	Sample Gain Curve for a 12-1/2-in. BF_3 Proportional Counter (Single Barrel)	45
23	Sample PHS Curve for a 12-1/2-in. BF_3 Proportional Counter (Single Barrel)	49
24	Sample PHS Curve for FN-62 Fast-Neutron Dosimeter in Lid Tank	49
25	Sample PHS Curve for FN-80 Fast-Neutron Dosimeter Using Self-Contained Alpha Source	49

REFERENCES

1. The Lid Tank Shielding Facility at Oak Ridge National Laboratory. Part I. Description, ORNL-2531 (to be published).

2. H. Goldstein, The Attenuation of Gamma Rays and Neutrons in Reactor Shields, p. 74, U. S. Government Printing Office, Washington 25, D. C., 1957.

3. D. R. Otis, The Lid Tank Shielding Facility at Oak Ridge National Laboratory. Part II. Determination of the Fission Rate of the Source Plate, ORNL-2350 (1959).

4. J. D. Kington and R. K. Abele, Applied Nuclear Physics Div. Ann. Prog. Rep. Sept. 1, 1957, ORNL-2389, p. 260.

5. R. D. Evans, Nucleonics 1, No. 2, 32 (1947).

6. L. H. Ballweg and J. L. Meem, A Standard Gamma-Ray Ionization Chamber for Shielding Measurements, ORNL-1028 (1951).

7. B. B. Rossi and H. H. Staub, Ionization Chambers and Counters; Experimental Techniques, p. 72, McGraw-Hill Book Co., Inc., New York, 1949.

8. B. B. Rossi and H. H. Staub, op. cit., p. 203.

9. For example, B. B. Rossi and H. H. Staub, op. cit., p. 186.

10. G. S. Hurst, Brit. J. Radiol. 27, No. 318, p. 353 (1954).

11. G. S. Hurst and R. H. Ritchie, Rev. Sci. Instr. 24, 664 (1953).

12. E. B. Wagner and G. S. Hurst, Rev. Sci. Instr. 29, 153 (1958).

13. L. H. Gray, Brit. J. Radiol. 10, No. 116 (1937).

14. G. S. Hurst, A Proportional Counter Method of Measuring Fast Neutron Dose, ORNL-CF-51-4-122 (1951).

15. G. S. Hurst, op. cit. p. 353.

16. E. Fairstein, Rev. Sci. Instr. 27, 475 (1956).

17. E. Fairstein, op. cit. p. 549.

18. F. M. Glass and G. S. Hurst, Rev. Sci. Instr. 23, 67 (1952).

19. J. E. Faulkner, Analysis of the Response Characteristics of the Fast-Neutron Dosimeter Integrating Circuit, ORNL-CF-54-4-17 (1954).

20. H. E. Hungerford, Center of Detection Calculations for Neutron Counters and Ion Chambers, ORNL-CF-51-5-177 (1951).

21. K. R. Spearman, Jr., Neutron Sensitivity of Anthracene Dosimeters, NARF-55-67T (1955).

22. W. R. Burrus, private communication.

23. L. B. Loeb, Fundamental Processes of Electrical Discharge in Gases, p. 486, John Wiley and Sons, Inc., New York (1939).

ORNL-2587
Instruments Category
TID-4500 (14th ed.)

INTERNAL DISTRIBUTION

1. C. E. Center
2. Biology Library
3. Health Physics Library
4-6. Central Research Library
7. Reactor Experimental Engineering Library
8-43. Laboratory Records Dept.
44. Laboratory Records, ORNL, R.C.
45. A. M. Weinberg
46. L. B. Emlet (K-25)
47. J. P. Murray (Y-12)
48. J. A. Swartout
49. E. H. Taylor
50. E. D. Shipley
51. A. H. Snell
52. W. H. Jordan
53. G. E. Boyd
54. E. P. Blizard
55. R. A. Charpie
56. M. L. Nelson
57. S. C. Lind
58. F. L. Culler
59. A. Hollaender
60. J. H. Frye, Jr.
61. M. T. Kelley
62. R. S. Livingston
63. K. Z. Morgan
64. A. S. Householder
65. C. P. Keim
66. C. S. Harrill
67. C. E. Winters
68. D. S. Billington
69. H. E. Seagren
70. D. Phillips
71. A. J. Miller
72. R. R. Dickison
73. P. M. Reyling
74. G. C. Williams
75. J. L. Fowler
76. R. B. Briggs
77. M. J. Skinner
78. J. A. Auxier
79. R. K. Abele
80. W. Zobel
81. J. M. Miller
82. L. Jung
83. P. T. Perdue
84. J. R. Taylor
85. E. Beckham
86. F. C. Maienschein
87. R. W. Peelle
88. T. A. Love
89. J. D. Kington
90. K. M. Henry
91. G. T. Chapman
92. R. G. Affel
93. C. J. Borkowski
94. G. deSaussure
95. T. V. Blosser
96. G. H. Hurst
97. F. M. Glass
98. C. E. Clifford
99. F. J. Muckenthaler
100. V. R. Cain
101. R. B. Murray
102. D. R. Ward
103. E. R. Rohrer
104. A. D. Callihan
105. L. B. Holland
106. F. L. Keller
107. E. G. Silver
108. A. Simon
109. N. Ethridge
110. F. L. Friedman (consultant)
111. H. Goldstein (consultant)
112. H. Hurwitz, Jr. (consultant)
113. L. W. Nordheim (consultant)
114. R. F. Taschek (consultant
115-117. ORNL - Y-12 Technical Library, Document Reference Section

EXTERNAL DISTRIBUTION

118-119. Battelle Memorial Institute, Columbus, Ohio (Attn: W. R. Morgan and Harold Epstein)
120. Alco Products, Inc., Schenectady, New York (Attn: W. J. McCool)
121. WADC at Brookhaven National Laboratory (Attn: R. D. Schamberger)
122. Westinghouse Electric Corporation, Bettis Atomic Power Division, Pittsburgh 30 (Attn: K. Shure)
123-129. General Electric, Cincinnati (Attn: F. A. Aschembrenner, J. MacDonald, W. E. Edwards, J. Carver, R. H. Clark, L. S. Burns, and S. T. Friedman)
130-131. General Electric, Idaho (Attn: J. Van Hoomissen and E. Finauer)
132. Jet Propulsion Laboratory, Pasadena, Calif. (Attn: R. V. Meghreblian)
133. National Advisory Committee for Aeronautics, Cleveland, Ohio (Attn: I. M. Karp)
134-135. Pratt and Whitney Aircraft (Attn: W. Kennedy and H. Woodsum)
136. Technical Research Group (Attn: R. Aronson)
137-138. The Martin Company (Attn: C. R. Fink and J. Weddell)
139-144. Wright Air Development Center (Attn: T. K. Kreuger, L. A. Bowman, D. W. Cady, W. J. Price, Donn Shankland, D. J. Breitenbecker)
145-147. Convair, San Diego (Attn: C. E. Chapman, Dr. Donaldson, and D. R. Otis)
148-770. Given distribution as given in Instruments Category (TID-4500, 14th ed.) (100 copies - OTS)
771. Division of Research and Development, AEC, ORO